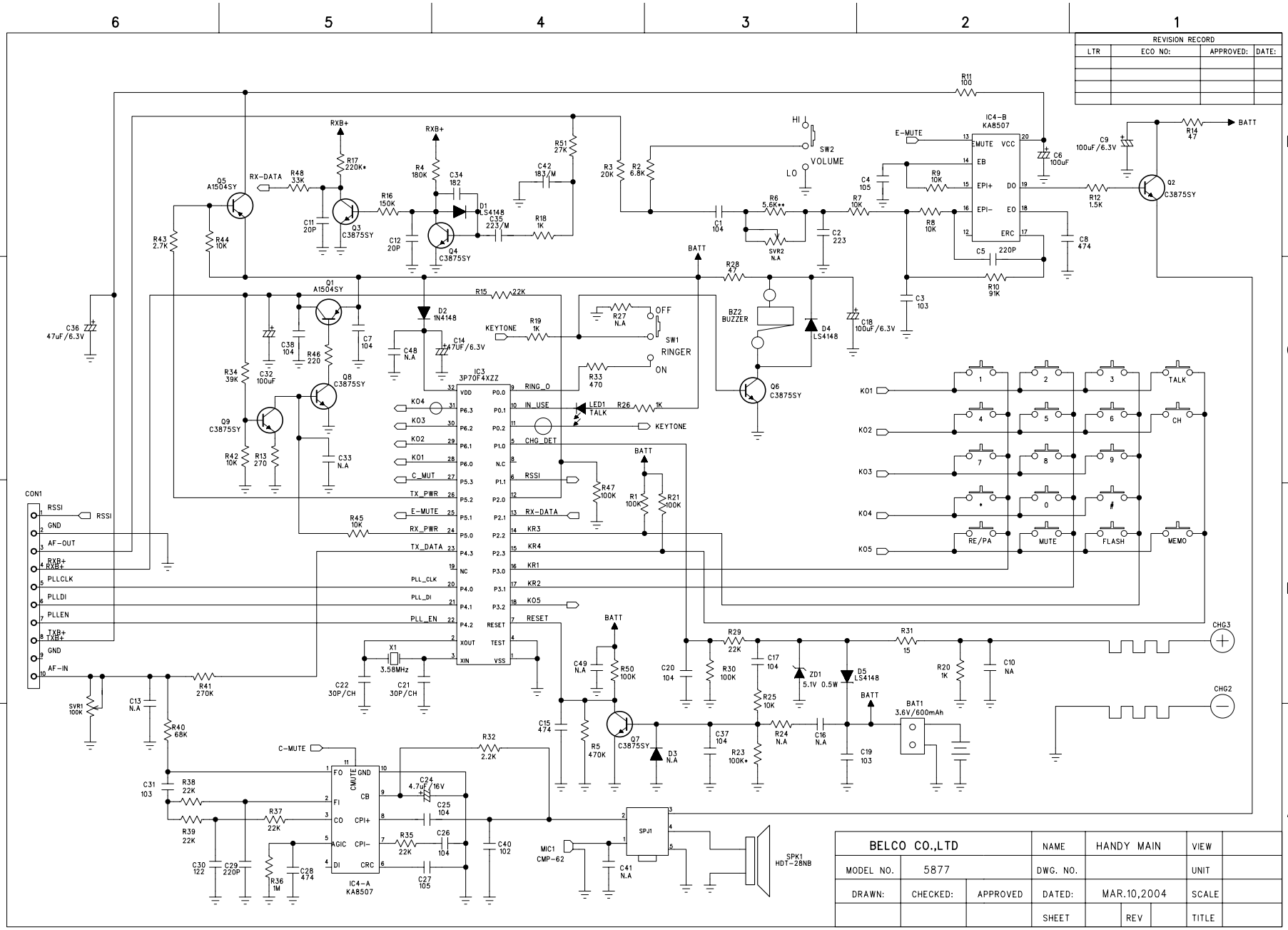
REVISION RECORD
LTR
ECO NO:
APPROVED:
DATE:
IC4-B
KA8507
IC3
3P70F4XZZ
IC4-A
KA8507
CON1
BELCO CO.,LTD
NAME
HANDY MAIN
VIEW
MODEL NO.
5877
DWG. NO.
UNIT
DRAWN:
CHECKED:
APPROVED
DATED:
MAR.10,2004
SCALE
SHEET
REV
TITLE

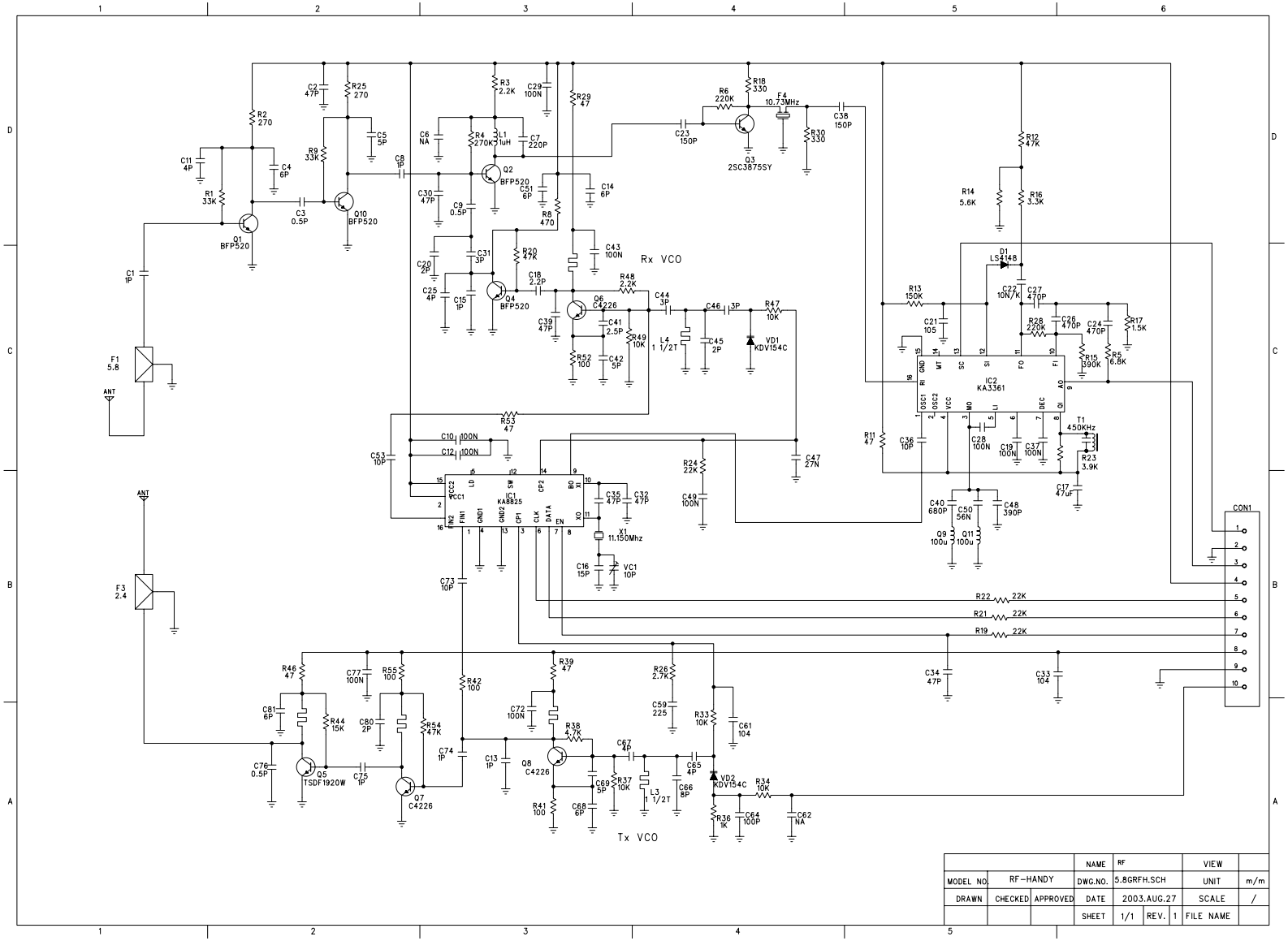

			NAME	RF		VIEW	
MODEL NO.	RF-HANDY		DWG.NO.	5.8GRFH.SCH		UNIT	m/m
DRAWN	CHECKED	APPROVED	DATE	2003.AUG.27		SCALE	/
			SHEET	1/1	REV. 1	FILE NAME	