INDEX

1. PURPOSE
2. SCOPE
3. ABBREVIATIONS AND DEFINITIONS
4. SYSTEM OVERVIEW

Rev.NO	DESCRIPTION OF CHANGED	CHANGE PAGE	REV. DATE	REV. BY
-	RELEASED	ALL	2017.05.26	W.C NO

REV. DATE		SORT	PREPARED	CHECKED	APPROVED
2017.05.26		APPROVAL	WON CHUL NO	HO NAM KIM	GYEONG HEUM CHOI
(PLM MANAGEMENT SYSTEM)					

Document Change History					
Date	Ver.	Editor	Chap.	Description	CR#

Contents list page

1. PURPOSE 4

2. SCOPE 4

3. ABBREVIATIONS AND DEFINITIONS 4

4. SYSTEM OVERVIEW 6

4.1. SYSTEM DESCRIPTION 6

4.2. OPERATION PRINCIPLE 6

4.3. ROLE AND CHARATERISTICS OF W.P.C PING 8

4.4. W.P.C COMMUNICATION AND CHARGING CHARACTERISTICS 10

4.5. PACKET LIST OF W.P.C CONTROLLER 11

4.6. W.P.C FLOW CHART 11

4.7. HARDWARE CONFIGURATION 11

4.8. SYSTEM CONFIGURATION 13

4.9. W.P.C OPERATION CONDITION 13

4.9.1. W.P.C OPERATING VOLTAGE 13

4.9.2. W.P.C INPUT/OUTPUT SPECIFICATIONS 14

4.9.2.1.UNIT Input/Output Interface 14

5. RED Article 10.2 Statement 15

6. Product specification 15

1. PURPOSE

This specification specifies general functional requirements, quality requirements and constraints applicable to the wireless charging system. If there is a difference between this specification and the drawings, the drawings take precedence.

2. SCOPE

This specification specifies general functional requirements, quality requirements and constraints applicable to the wireless charging system. If there is a difference between this specification and the drawings, the drawings take precedence.

3. ABBREVIATIONS AND DEFINITIONS

Item, abbreviation, acronym	Description
WPC	Wireless Power Charger
Active Area	An interface surface portion through which magnetic flux penetrates sufficiently when the base station provides power to the mobile device
Power Transmitter	Wireless power transmission system Subsystem of base station that generates inductive power in Active Area and controls power transmission to RX
Base Station	Devices that transmit power wirelessly
Digital Ping	Application of Power Signal for RX Detection and Device Identification
Free Positioning	Place the mobile device on the interface surface of the base station. The user does not need to align the active area of the mobile device with the active area of the base station.
Guided Positioning	One way to locate a mobile device on the interface surface of the base station is to provide feedback for the user to align the active area of the mobile device to the active area of the base station
Interface Surface	Base station and mobile device Connected surface
Mobile Device	Devices that can consume inductive power in active area in wireless power transmission system
Packet	Data structure that RX uses to communicate messages to TX

Power Receiver	Wireless Power Transmission System Subsystem of Mobile Device that acquires inductive power in Active Area and controls the validity of its output power
Power Signal	Vibrating flux surrounded by primary cell and secondary coil
Power Transfer Contract	A set of boundary conditions with parameters having characteristics for power transmission from TX to RX
Primary Cell	A single Primary Cell or Primary Cell used to provide high magnetic flux through the Active Area
Secondary Coil	Parts of RX that switch from magnetic flux to electromotive force

Table 1 : ABBREVIATIONS

4. SYSTEM OVERVIEW

4.1. SYSTEM DESCRIPTION

A wireless charger (WPC) installed in a vehicle is a system that transmits power to a mobile phone or a power receiver by power transmission by magnetic induction of a WPC coil and a cell phone coil without a USB connection.

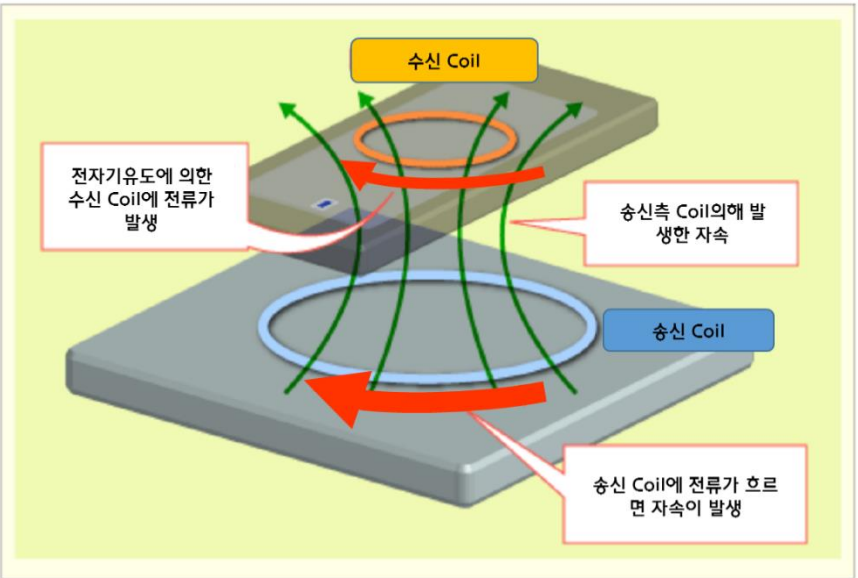

Picture 1 :OPERATION PRINCIPLE

4.2. OPERATION PRINCIPLE

WPC transmits power by magnetic induction to the overlapping area of the coil inner diameter of WPC and the coil inner diameter of WPC with LC resonance (110KHZ).

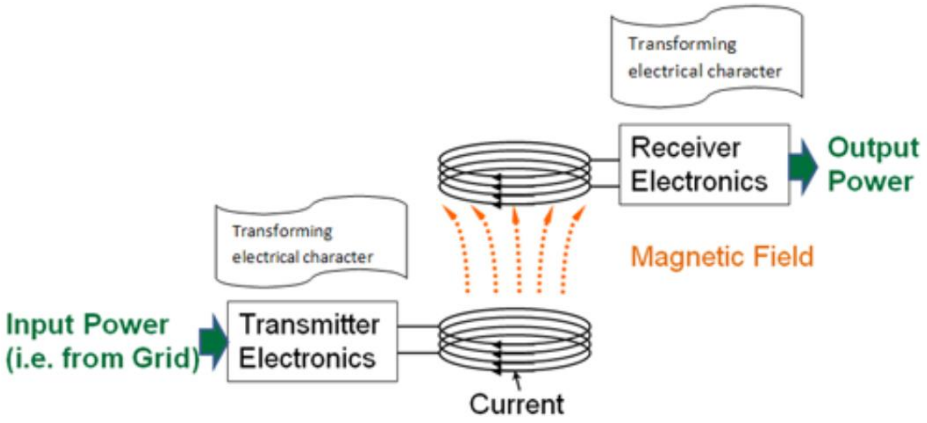

Picture 2 : POWER FLOW

4.3. ROLE AND CHARATERISTICS OF W.P.C PING

- Analog Ping : Meter reading on wireless charge controller

- Digital Ping : Verify that the meter reading is a wireless charger WPC receiver

Packet Input Sequence	Packet	Purpose	Division
1	Signal Strength	Receiver Type	Digital Ping
2	Identification	Information such as the receiver manufacturer	
3	Configuration	Receiver internal information	
4	End Power Transfer	Stop power transmission	Digital Ping

Table 2 : Digital Ping Packet

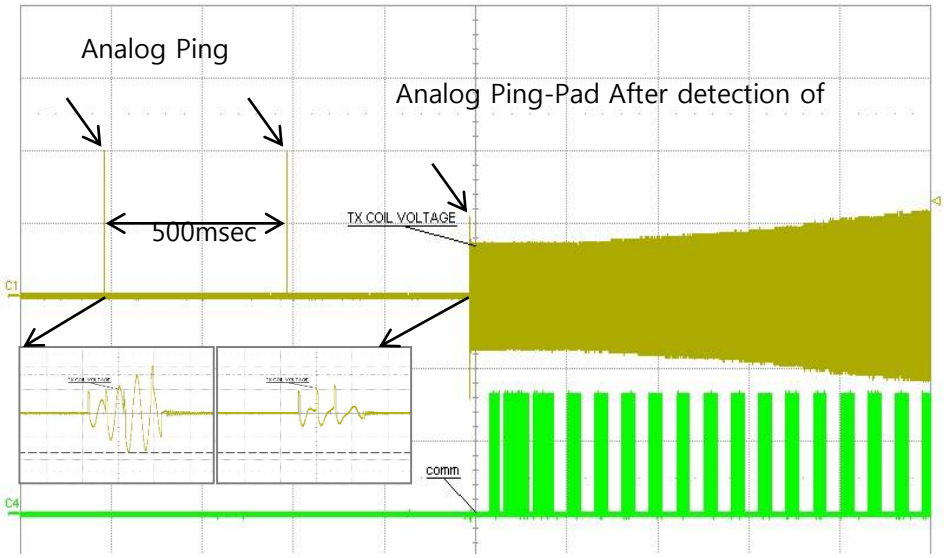

Picture 3 : Receiver Recognition (Ping) Phase and Power Transfer Phase

Ping Division	Voltage	Timing	Frequency
Analog	SIDE : 3.5V±0.5V	500ms	110KHz
	Center : 3.0V±0.5V	500ms	110KHz
Digital	-	64ms	110KHz

Table 3 : Ping Specification

4.4. W.P.C COMMUNICATION AND CHARGING CHARACTERISTICS

Wireless Charging Transmits messages with uni-directional in-band (ASK) communication using a specific frequency between the transmit coil and the receive coil.

The wireless charger transmit coil transmits the power of the MAX15W and the operating frequency is 110KHZ.

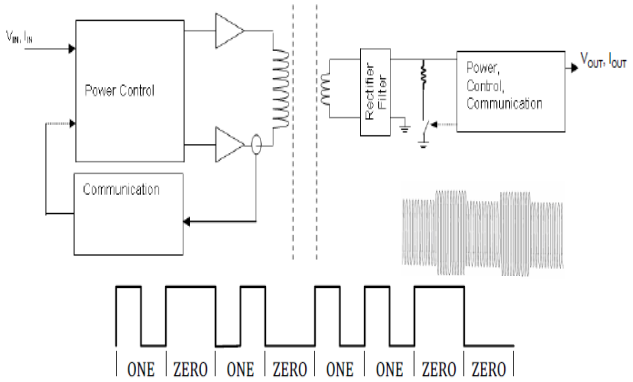

Picture 4 : Wireless charging controller communication method

4.5. PACKET LIST OF W.P.C CONTROLLER

Header*	Packet Types	Message Size
ping phase		
0x01	Signal Strength	1
0x02	End Power Transfer	1
identification & configuration phase		
0x06	Power Control Hold-off	1
0x51	Configuration	5
0x71	Identification	7
0x81	Extended Identification	8
power transfer phase		
0x02	End Power Transfer	1
0x03	Control Error	1
0x04	Received Power	1
0x05	Charge Status	1

Table 4 : W.P.C Packet List

4.6. W.P.C FLOW CHART

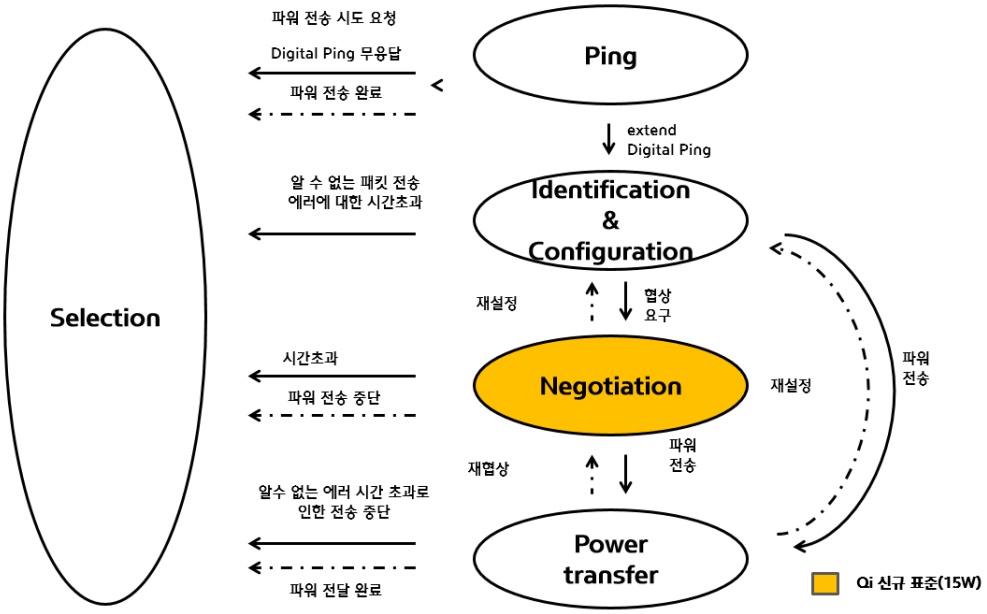

Picture 5 : W.P.C Flow Chart

4.7. HARDWARE CONFIGURATION

The hardware configuration consists of Conrtoll, wireless charging, and wireless charging antenna coils.

- CONRTOLL CIRCUIT

  1. Control of wireless charger operation

2. INDICATOR operation controll
3. CAN communication controll

- W.P.C CIRCUIT
  1. Wireless Charging Antenna Coil transfers the power received from BATTERY
  2. Check the unidirectional Inventory (ASK) data received from the mobile phone to control the transmission power
  3. Control the amount of transmission power through voltage variation
  4. Control of rechargeable coil selection function among 3 coils
- Wireless Charging Antenna Coil
  1. Delivered power from wireless charging circuit to mobile phone

4.9. W.P.C OPERATION CONDITION

4.9.1.W.P.C OPERATING VOLTAGE

OPERATION	Signal	Value		Protection				Chattering Time	Remarks
		LOW	HIGH	Under		Over			
				Detect	Release	Detect	Release		
CAN	B+	6.8V	7V	7.0V	7.5V	18V	17.5V	30ms	
WPC	B+	8.5V	9V	9.0V	9.5V	16.5V	16.0V	30ms	
	A_ACC	7.1V	7.8V	-	-	-	-	30ms	
	LF_Searching	3.0V	5.6V	-	-	-	-	10ms	
	LED_AMBER	8.5V	9V	-	-	-	-	-	500ms
	LED_GREEN	8.5V	9V	-	-	-	-	-	500ms

Table 5 : W.P.C OPERATING VOLTAGE

4.9.2. W.P.C INPUT/OUTPUT SPECIFICATIONS

- UNIT CONNECTOR : KET MG645877
- UNIT WIRING CONNECTOR : KET MG655823

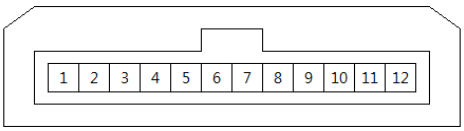

<PIN MAP>

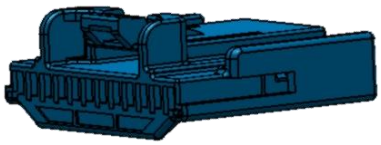

<WIRING CONNECTOR>

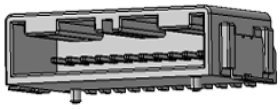

<UNIT >CONNECTER

Picture 7 : UNIT CONNECTOR (12PIN)

4.9.2.1. UNIT Input/Output Interface

Pin	Designation	PIN Description	Diagnosis	Short circuit proof
1	B+	BATTERY Voltage Input		N/A
2	A_ACC	ACC Voltage Input		N/A
3	N.C.	NO.CONNECT		N/A
4	L_LFSearchingOn_IN	SMK Searching State Input		Pull-up resistor/diode
5	B-CAN_HI	LS-CAN High Level Signal		IC self protection
6	B-CAN_LO	LS-CAN Low Level Signal		IC self protection
7	N.C.	NO.CONNECT		N/A
8	P_LED_GREEN	Charging State Output		Current limit circuit applied (PWM operation)
9	P_LED_AMBER	Charging State Output		Current limit circuit applied (PWM operation)
10	GND_ECU	Ground CONNECT INDICATOR		N/A
11	N.C.	NO.CONNECT		N/A
12	GND_POWER	Ground		N/A

Table 6 : UNIT Input / Output Inerface

5. RED Article 10.2 Statement

"This device is compliant with the RED article 10.2 requirement because this device is operated at least one Member State without infringing applicable requirements on the use of radio spectrum."

6. Product specification

SW / HW Version	1.00 / 1.00
Charge Frequency	110.90 kHz (5W)
Max Power	6.08 dBuA/m @ 10m
Voltage	DC 12V

*Hereby, **SEOYON ELECTRONICS Co.,Ltd** declares that the radio equipment type **Wireless Charging System** is in compliance with Directive 2014/53/EU.*

7. Address

100, Saneop-ro 156beon-gil, Gwonseon-gu, Suwon-si, Gyeonggi-do, Korea 16648

8. EU member state

The equipment can be used in all member states without any restrictions

ANNEX (EN/BG/ES/CS/DA/DE/ET/EL/FR/GA/IT/LV/LT/HU/MT/NL/PL/PT/RO/SK/SL/FI/SV/TR/NO/HR/IS)

1 **(EN)EUDeclarationofConformity/(BG)**ДЕКЛАРАЦИЯЗАСЪОТВЕТСТВИЕСИЗИСКВАНИЯТАНАЕС/**(ES)**DeclaraciónUEdeConformidad/**(CS)**EUProhlášeníoshodě/**(DA)**EU-Overensstemmelseserklæring/**(DE)**EU-Konformitätserklärung/**(ET)**ELiVastavusdeklaratsioon/**(EL)**ΔΗΛΩΣΗΣΥΜΜΟΡΦΩΣΗΣΕΕ/**(FR)**DéclarationUEdeConformité/ **(GA)**DearbhúComhréireachtaanAE/**(IT)**DichiarazioneUEdiConformità/**(LV)**ESAtbilstībasDeklarācija/**(LT)**ESAtitiktiesDeklaracija/**(HU)**EU-Megfelelőségi Nyilatkozat/ **(MT)**DikjarazzjoniTal-KonformitàTal-UE/**(NL)**EUConformiteitsverklaring/**(PL)**DeklaracjaZgodnościUE/**(PT)**DeclaraçãodeConformidadeUE/**(RO)**DeclarațiadeConformitateUE/ **(SK)**VyhlásenieoZhodeEÚ/**(SL)**IzjavaEUoSkladnosti/**(FI)**EU-Vaatimustenmukaisuusvakuutus/**(SV)**EU-FörsäkranomÖverensstämmelse/**(TR)**UygunlukBeyanı/ **(NO)**EUSamsvarserklæring/**(HR)**EZizjavaosukladnosti/**(IS)**ESBSamræmisyfirlýsing

2 **(EN)Number/(BG)**№/**(ES)**№/**(CS)**Č./**(DA)**Nr./**(DE)**Nr./**(ET)**Nr/**(EL)**Αριθ./**(FR)**№/**(GA)**Uimhir/**(IT)**N./**(LV)**Nr./**(LT)**Nr./**(HU)**Szám/**(MT)**Numru/**(NL)**Nr./**(PL)**Nr/**(PT)**N.º/**(RO)**Nr/**(SK)**Číslo/**(SL)** Št./**(FI)**N:o/**(SV)**Nr/**(TR)**Sayısı/**(NO)**Nr./**(HR)**Broj/**(IS)**Número

3 **(EN)NameandaddressoftheManufacturer/(BG)**Наименованиеиадреснапроизводителя/**(ES)**Nombreydireccióndelfabricante/**(CS)**Obchodníjménoaadresavýrobce/**(DA)**Fabrikanten snavnogadresse/**(DE)**NameundAnschriftdesHerstellers/**(ET)**Valmistajanimijaaadress/**(EL)**Ονομακαιδιεύθυνσηκατασκευαστή/**(FR)**Nometadressedufabricant/**(GA)**Ainmagusseoladhan Mónaróra/**(IT)**Nomeeindirizzodelfabbricante/**(LV)**Ražotājanosaukumsunadrese/**(LT)**Gamintojopavadinimasiradresas/**(HU)**Gyártóneveéscíme/**(MT)**Isemuindirizztal-manifattur/**(NL)**Naamenadresvandefabrikant/**(PL)**Nazwaiadresproducenta/**(PT)**Nomeeendereçodofabricante/**(RO)**Numeleșiadresa Producătorului/**(SK)**Obchodnémenoaadresavýrobcu /**(SL)**Imeinnaslovproizvajalca/**(FI)**Valmistajannimijaosoite/**(SV)**Tillverkarensnamnochadress/**(TR)**İmalatçınınadıveadresi/**(NO)**Navnpåogadressetilprodusenten/**(HR)**Naziviadresaproizv ođača/**(IS)**Nafnogheimilisfangframleiðanda

4 **(EN)Thisdeclarationofconformityisissuedunderthesoleresponsibilityofthemanufacturer/(BG)**Занастоящатадекларациязасъответствиеотговорностнасъединственопроизвод ителят/**(ES)**Lapresentedeclaraciónde conformidadseexpidebajolaexclusivaresponsabilidaddelfabricante/**(CS)**Totoprohlášeníoshoděvydalnavlastníodpovědnostvýrobce/**(DA)**Denneove rensstemmelseserklæringudstedespåfabrikantensansvar/**(DE)**DieseKonformitätserklärungwirdunterderalleinigenVerantwortungdesHerstellersabgegeben/**(ET)**Käesolevvastavusdeklar atsioononväljaantudvalmistajaainuvastutusel/**(EL)**Ηπαρούσαδήλωσησυμμόρφωσηςεκδίδεταιμεαποκλειστικήευθύνητουκατασκευαστή/**(FR)**Laprésentedéclarationdeconformitéestétabli esouslaseuleresponsabilitédufabricant/**(GA)**Eisíteardearbhúcomhréireachtafaoifhreagrachtaonairanmhonaróra/**(IT)**Lapresentedichiarazionediconformità è rilasciatasottolaresponsabi litàesclusivadelfabbricante/**(LV)**Šītabilstībasdeklarācijairizdotavienīgiuzšādaražotājaatbildību/**(LT)**Šiatitiktiesdeklaracijaišduotatikgamintojoatsakomybe/**(HU)**Emegfelelőséginyilatkozata gyártókizárólagosfelelősségérekerülkibocsátásra/**(MT)**Dinid-dikjarazzjonital-konformità tinħaregħatħir-responsabbiltàunikatal-manifattur/ **(NL)**Dezeconformiteitsverklaringwordtverstrektondervolledigeverantwoordelijkheidvandefabrikant/**(PL)**Niniejszadeklaracjazgodnościwydanazostajenawyłącznąodpowiedzialnośćpro centa/**(PT)**Apresentedeclaraçãodeconformidadeéemitidasobaexclusivaresponsabilidadedofabricante/**(RO)**Prezentadeclarațiedeconformitateesteemisăperăspundereaexclusivăaprodu cătorului/**(SK)**Totovyhlášenieozhodesavydávanavýhradnúzodpovednosťvýrobcu/**(SL)**Taizjavaoskladnostiseizdanalastnoodgovornostproizvajalca/**(FI)**Tämävaatimustenmukaisuusvaku utusonannettuvalmistajanyksinomaisellavastuulla/**(SV)**Dennaförsäkranomöverensstämmelseutfärdaspåtillverkarensegetansvar/**(TR)**Buuygunlukbeyanı,imalatçınınsorumluluğualtındav erilir/**(NO)**Dennesamsvarserklæringenerutstedtpåprodusentenseneansvar/**(HR)**Zaizdavanjeoveizjaveosukladnostiisključivojeodgovoranproizvođač/**(IS)**Þessisamræmisyfirlýsingergefin úteingönguábyrgðframleiðanda

5 **(EN)Objectofthedeclaration/(BG)**Обектнадекларацията/**(ES)**Objetodeladeclaración/**(CS)**Předmětprohlášení/**(DA)**Erklæringensgenstand/**(DE)**GegenstandderErklärung/**(ET)**Deklare eritavese/**(EL)**Σκοπόςτηςδήλωσης/**(FR)**Objetdeladéclaration/**(GA)**Cuspóirandearbhaithe/**(IT)**Oggettodelladichiarazione/**(LV)**Deklarācijasprieksmets/**(LT)**Deklaracijosobjektas/**(HU)**Anyil atkozattárgya/**(MT)**L-għantad-dikjarazzjoni/**(NL)**Voorwerpvandeverklaring/**(PL)**Przedmiotdeklaracji/**(PT)**Objectodadeclaração/**(RO)**Obiectuldeclarației/**(SK)**Predmetvyhlásenia/ **(SL)**Predmetizjave/**(FI)**Vakuutuksenkohde/**(SV)**Föremålförförsäkran/**(TR)**Beyanınnesne/**(NO)**Erklæringensgjenstand/**(HR)**Predmetizjave/**(IS)**Hluturtilyfirlýsingar

6 **(EN)Productinformation;ProductName;ModelName/(BG)**Информациязапродукта,именонапродукта,именонамодела/**(ES)**Información deproducto;nombredelproducto;nombredel modelo/**(CS)**Informaceovýrobku;Názevvýrobku;Názevmodelu/**(DA)**Produktinformation;Produktnavn;Modelnavn/**(DE)**Produktinformation;Produktname;Modellname/**(ET)**Tootekirjeldus; Tootenimetus;Mudelinimi/**(EL)**Πληροφορίεςγιατοπροϊόν,όνομαπροϊόντος,όνομαμοντέλου/**(FR)**Informationsurleproduit;Nomduproduit;Nomdumodèle/**(GA)**FaisnéisTáirge;AinmTáirge;Ai nmMúnla/**(IT)**Informazionisulprodotto;denominazionedelprodotto;Nomedelmodello/**(LV)**Informācijapariszīrādājumu;Izstrādājumanosaukums;modeļanosaukums/**(LT)**Informacijaapiepro duktą;produktopavadinimas;modeliopavadinimas/**(HU)**Termékinformáció;atermékneve;típusnév/**(MT)**Informazzjonital-prodott;isemtal-prodott;isemtal-mudell/ **(NL)**Productinformatie,Productnaam;Modelnaam/**(PL)**Informacjeoprodukcie;nazwaproduktu;nazwamodelu/**(PT)**Informaçãosobreoproduto;NomedoProduto;DesignaçãodoModelo/**(RO)** InformațiidespreProdus;DenumireProdus;NumeModel/**(SK)**Informácieovýrobku;Názovvýrobku;Názovmodelu/**(SL)**Podatkioizdelku;imeizdelka;imemodela/**(FI)**Tuotetiedot;tuotteennimi; mallinimi/**(SV)**Produktinformation;produktnamn;modellnamn/**(TR)**Ürünbilgileri;ÜrünAdı;ModelAdı/**(NO)**Produktinformasjon,Produktnavn,Modellnavn/**(HR)**Podatcioproizvodu;Nazivproiz voda;Nazivmodela/**(IS)**Vöruupplýsingar;Nafnvöru;Nafngerðar

7 **(EN)Additionalinformation/(BG)**Допълнителнаинформация/**(ES)**Información adicional/**(CS)**Dalšíinformace/**(DA)**Supplerendeoplysninger/**(DE)**ZusätzlicheAngaben/**(ET)**Lisateave/**(E L)**Συμπληρωματικέςπληροφορίες/**(FR)**Informationssupplémentaires/**(GA)**Faisnéisbhreise/**(IT)**Ulterioriinformazioni/**(LV)**Papildu informācija/**(LT)**Papildomainformacija/**(HU)**Kiegészítőinf ormációk/**(MT)**Informazzjoniaddizzjonali/**(NL)**Aanvullendeinformatie/**(PL)**Informacjedodatkowe/**(PT)**Informaçõescomplementares/**(RO)**Informațiisuplimentare/**(SK)**Dodatočnéinformáci e/**(SL)**Dodatnipodatki/**(FI)**Lisätietoja/**(SV)**Ytterligareinformation/**(TR)**Ekbilgi/**(NO)**Tilleggsopplysninger/**(HR)**Dodatneinformacije/**(IS)**Viðbótaruppl ýsingar

8 **(EN)Theobjectofthedeclarationdescribedaboveisinconformitywiththerelevant Unionharmonisationlegislation/(BG)**Предметътнадекларацията,описанпо- горе,отговарянасъответнотозаконодателствонаСъюзазахармонизация/**(ES)**Elobjetodeladeclaración descritaanteriormenteesconformeconlalegislaciónderarmonización pertinentedel aUnión/**(CS)**Výšepopsanýpředmětprohlášeníjeveshoděspříslušnýmiharmonizačníminprávními předpisyUnie/**(DA)**Genstandenforerklæringen,sombeskrevetovenfor,erioverensstemmelse meddenrelevanteEU-harmoniseringslovgivning/**(DE)**Derobenbeschriebene Gegenstandder Erklärungerfüllt dieeinschlägigen Harmonisierungsrechtsvorschriften der Union/ **(EL)**Οστόχοςτηςδήλωσηςπουπεριγράφεταιπαραπάνωείναισύμφωνοςμετηνσχετικήενωσιακήνομοθεσίαεναρμόνισης/**(FR)**L'objetdeladéclarationdécritci- dessusestconformeàlalégislationd'harmonisationdel'Unionapplicable/**(GA)**TácuspóirandearbhaitheathaairiscítearthuasigcomhréirleireachtaíochtábharthaumchomhchuibhiúdechuidanA ontais/**(IT)**L'oggettodelladichiarazionedicuisopraèconformeallapertinentenormativadiarmonizzazionedell'Unione/**(LV)**IepriekšaprakstītaisdeklarācijasprieksmetsatbilstattiecīgajamSavie nībassaskaņošanastiesībuaktam/**(LT)**PirmiauaprašytasdeklaracijosobjektasatitinkasusijusiusderinamuosiusSajungosteisėsaktus/**(HU)**Afentismertetettnyilatkozattárgyamegfelelavonat kozóunióharmonizációsjogszabályoknak/**(MT)**L-għantad-dikjarazzjonideskritthawnfuqhuwakonformimal-leġislazzjonita'armonizzazzjonirilevantital-Unjoni/ **(NL)**HethierbovenbeschrevenvoorwerpisinovereenstemmingmetdedesbetreffendeharmonisatiewetgevingvandeUnie/**(PL)**Wymienionypowyżejprzedmiotniniejszejdeklaracjijestzgodnyz odnośnymiwymaganiamiunijnegoprawodawstwaharmonizacyjnego/**(PT)**OobjetodadeclaraçãoacimadescritoestáemconformidadecomalegislaçãodeharmonizaçãodaUniãoaplicável/**(R O)**ObiectuldeclarațieidescrismaisusesteînconformitateculegislațiarelevantădearmonizareaUniunii/**(SK)**Uvedenýpredmetvyhláseniajevzhodespríslušnýmiharmonizačnýmipráv nymipred pismiÚnie/**(SL)**PredmetnavedeneizjaveuskladujesmjerodavnimzakonodavstvomUnijeouskladňivanju/**(FI)**Edelläkuvattuvakuutuksenkohdeonasiaakoskevanunionininyhdenmukaistamislai nsäädännönvaatimustenmukainen/**(SV)**Föremålförförsäkranovanöverensstämmermeddenrelevantaharmoniseradeunionslagstiftningen/**(TR)**YukarıdaaçıklananbildirininnesnesiilgiliTo plulukuyummevzuatınauygundur/**(NO)**Formåletmederklæringenbeskrevetovenforerisamsvarmeddenaktuelleharmoniseringslovgivningeniunionen/**(HR)**Afentismertetettnyilatkozattárgy amegfelelavonatkozóunióharmonizációsjogszabályoknak/**(IS)**EfniofangreindraryfirlýsingarerísamræmiviðhlutaðeigandistaðlaðalöggjöfEvrópusambandsins

9 **(EN)Referencestotherelevantharmonisedstandardsusedorreferencestothetechnicalspecificationsinrelationtowhichconformityisdeclared/(BG)**наименованиятанаизползван итехармонизиранистандартиилитехническитеспецификации,спрямкоитоседекларирасъответствието/**(ES)**Referencias alas normas armonizadas aplicadas o a las especificaciones técnicas respecto a las cuales se declara la conformidad/**(CS)**Případněodkazynapříslušnéharmonizovanénormy,kterébylypoužity,nebonatechnickéspecifikace,najejic hžzákladěseshodaprohlašuje/**(DA)**Referencertildereleva nteanvendteharmoniseredestandarderellerreferencertildetekniskespecifikationer,somdererklæresoverensstemmelsemed/**(DE)** AngabedereinschlägigenharmonisiertenNormen,diezugrundegelegtwurden,oderAngabedertechnischenSpezifikationen,fürdiedieKonformitäterklärtwird/**(ET)**Viitedkasutatudasjakohaste leühtlustatudstandarditelevõiviitedtehnilistelespetsifikatsioonidele,millegaseosesvastavustkinnitatakse/**(EL)**μνείατωνσχετικώνεναρμονισμένωνπροτύπωνπουχρησιμοποιήθηκανήτωντε χνικώνπροδιαγραφώνμεβάσητιςοποίεςδηλώνεταιησυμμόρφωση/**(FR)**Références des normes harmonisées pertinentes appliquées ou des spécifications techniques par rapport aux quelles la c onformité est déclarée/**(GA)**Tagairtídonacaighdeáinchomhchuibhitheábharthaaúsáidtearnótagairtídonasonraíochtaíteicniúlaindáilleisangcomhréireachtadhearbha ítear/**(IT)**Riferimentiall epertinentinormearmonizzateutilizzateoriferimentiallespecifichetecnichenelazionearellequalièdichiaratala conformità/**(LV)**Norādesuzatbiecīgajiemsaskaņotajiemstandartiemvainorādesuz tehniskāmspecifikācijām,attiecībāuzkotiekdeklarētaatbilstība/**(LT)**Taikytųdarniųjųstandartųnuorodosarbatechniniųspecifikacijų,pagalkuriasbuvodeklaruotaatitiktis,nuorodos/**(HU)**Adotte setbenhivatkozásazalkalmazásrakerültvonatkozóharmonizáltszabványokra,illetőlegazokraaműszakileírásokra,amelyekrenézveamegfelelésro lnyilatkoznak/**(MT)**Referenzigħall-istandardsarmonizzatirilevantilintużaw,jewreferenzigħall-ispecifikazzjonijietlib'relazzjonigħalihomqedtiġiddikjarataal-konformità/ **(NL)**Vermeldingvandetoegepastegeharmoniseerdenormenofvandetechnischespecificatieswaaropdeconformiteitsverklaringbetrekkingheeft/**(PL)**Odwołaniadoodnośnychnormzharmoni zowanych,którezastosowano,lubdospecyfikacjitechnicznych,wodniesieniudoktórychdeklarowanajestzgodność/**(PT)**Referências às normas harmonizadas aplicáveis utilizadas ou às especif icações técnicas em relação às quais é declarada a conformidade/**(RO)**Trimiterilastandardelearmonizaterelevantefolositesautrimiterilaspecificațiiletehniceînlegătură cu care se declară confor mitatea/**(SK)**Prípadnéodkazynapríslušnépoužitéharmonizovanénormyaleboodkazynatechnickéšpecifikácie,nazákladektorýchsavyhlasujezhoda/**(SL)**Napotilanauporabljeneusklajenest andardealinapotilanatehničnespecifikacijezaskladnost,kisonavedenenaizjavi/**(FI)**Viittausniihinasiaankuuluvininyhdenmukaistettuihinstandardeihin,joitaonkäytetty,taiviittausteknisiineritel miin,joidenperusteellavaatimustenmukaisuusvakuutusonannettu/**(SV)**Hänvisningartilldereleva ntaharmoniseradestandardersomanväntsellerhänvisningartilldetekniskaspecifikationerenl igtvilkaöverensstämmelsenförsäkras/**(TR)**İlgiliuyumlaştırılmışkullanılanstandartlarveyauygunlukbeyanileilgililolarakteknikreferanslarreferanslar/**(NO)**Henvisningertildereleva nteharmoni sertestandardenesomerbruktellerhenvisningertildespesifikasjonenedeterklæressamsvarmed/**(HR)**Upućivanjenamjerodavneuskladenenormeiilupućivanjenatehničkespecifikacijenatem eljukojihseizjavljujesukladnost/**(IS)**Tilvísanirívíðeigandisamhæfingarstaðlasemerunotaðireðatilvísaniríþærtæknifor skriftirsemtengjastsamræmisyfirlýsingunni

10 **(EN)Thenotifiedbody;performed;andissuedthecertificate/(BG)**нотифициранияторгран;извършиИиздадесертификата/**(ES)**Elorganismonotificado;haefectuado;yexpideelcertificad o/**(CS)**Oznámenýsubjekt;provedl;avydalosvědčení/**(DA)**Detbemyndigedeorgan;derharforetaget;ogudstedtattesten/**(DE)**Dienotifizierte Stelle;hat;undfolgende Bescheinigung ausgestellt/**(ET)**Teavitatudasutus;teostas;jaandisväljatõendi/**(EL)**οκοινοποιημένοςοργανισμός;πραγματοποίησε;καιεξέδωσετηβεβαίωση/**(FR)**L'organismenotifié;aeffectué;etaétablil'attestation/**(GA)** Rinneancomhlachtdádtugtarfógra...agusd'eisighséandeimhniú/**(IT)**l'organismonotificato;haeffettuato;erilasciatoilcertificato/**(LV)**Pilnvarotāiestāde;irveikusi;unizsniegusisertifikātu/**(LT)**No tifikuotojisiaiga;atliko;irišdavėsertifikatą/**(HU)**Abejelentettszervezet;elvégeztea;ésakövetkezőtanúsítványtadtaki/**(MT)**Il-korpnotifikat;wettaq;uħareġiċ-certifikat/ **(NL)**Deaangemeldeinstantie;heefteen;uitgevoerdenhetcertificaatverstrekt/**(PL)**jednostkanotyfikowana;przeprowadziła;iwydałacertyfikat/**(PT)**oorganismonotificado;efectuou;eemitiuocer tificado/**(RO)**Organismulnotificat;aefectuat;șiaemiscertificatul/**(SK)**notifikovanýorgán;vykonal;avydalosvedčenie/**(SL)**jepriglašeniorgan;izvedel;inizdalcertifikat/**(FI)**Ilmoitettulaitos;suoritti ;jaantoitodistuksen/**(SV)**Detanmäldaorganet;harutfört;ochutfärdatintyget/**(TR)**Kuruluşabildirmiş;yapılanvesertifikaverilir/**(NO)**Detmeldteorgan;utført;somogsåinkluderertestresultatogutst edelseavsertifikat/**(HR)**Obaviještenotijelo;proveloje;uključujućiizvješćeoispitivanjuizdalojecertifikat/**(IS)**Hinntilkynntiaðili...framkvæmdi...þarmeðtaliðprófunarskýrslurnaroggafútvottorðið

11 **(EN)Signedforandonbehalfof/(BG)**Подписзаилиотиметона/**(ES)**Firmadoporyennombrede/**(CS)**Podepsánozaajménem/**(DA)**Underskrevetforogpåvegneaf/**(DE)**Unterzeichnetfürundi mNamenvon/**(ET)**(Kellenimeljapoolt)allakirjutatud/**(EL)**Υπογραφήγιαλογαριασμόκαιεξονόματος/**(FR)**Signéparetaunomde/**(GA)**Sínithelehaghaidhagustharceannan/**(IT)**Firmatoinveceep ercontodi/**(LV)**Parakstīts/**(LT)**Užkąirkienovardupasirašyta/**(HU)**Cégszerűaláírás/**(MT)**Iffirmatagħaluf'isem/**(NL)**Ondertekendvoorennamens/**(PL)**Podpisanowimieniu/**(PT)**Assinadoporee mnomede/**(RO)**Semnatpentrușîînnumele/**(SK)**Podpísanézaavmene/**(SL)**Podpisanozainvimenu/**(FI)**puolestaallekirjoittanut/**(SV)**Undertecknatför/**(TR)**Veadınaimzalanmıştır/**(NO)**Undert egnetforogpåvegneav/**(HR)**Potpisanozaiuime/**(IS)**Undirritaðfyrirogfyrirhönd

FCC warning statement:

15.19

λ. This device complies with Part 15 of the FCC Rules. Operation is subject to the following two conditions:

(1) this device may not cause harmful interference, and (2) this device must accept any interference received, including interference that may cause undesired operation.

15.105

This equipment has been tested and found to comply with the limits for a Class B digital device, pursuant to part 15 of the FCC Rules. These limits are designed to provide reasonable protection against harmful interference in a residential installation. This equipment generates, uses and can radiate radio frequency energy and, if not installed and used in accordance with the instructions, may cause harmful interference to radio communications. However, there is no guarantee that interference will not occur in a particular installation. If this equipment does cause harmful interference to radio or television reception, which can be determined by turning the equipment off and on, the user is encouraged to try to correct the interference by one or more of the following measures:

—Reorient or relocate the receiving antenna.

—Increase the separation between the equipment and receiver.

—Connect the equipment into an outlet on a circuit different from that to which the receiver is connected.

—Consult the dealer or an experienced radio/TV technician for help.

15.21

- Any changes or modifications not expressly approved by the party responsible for compliance could void the authority to operate equipment.
- This device and its antenna must not be co-located or operating in conjunction with any other antenna or transmitter.
- End-users and installers must be provided with antenna installation instructions and transmitter operating conditions for satisfying RF exposure compliance.

FCC/ IC RF Radiation Exposure Statement:

This equipment complies with FCC/ ISED RF radiation exposure limits set forth for an uncontrolled environment for body-worn configuration in direct contact to the phantom.

This device complies with FCC/ ISED radiation exposure limits set forth for an uncontrolled environment.

IC warning statement:

RSS-Gen Issue 4 8.4

This device complies with Industry Canada's licence-exempt RSSs. Operation is subject to the following two conditions: (1) This device may not cause interference; and (2) This device must accept any interference, including interference that may cause undesired operation of the device.

Le présent appareil est conforme aux CNR d'Industrie Canada applicables aux appareils radio exempts de licence. L'exploitation est autorisée aux deux conditions suivantes: (1) l'appareil ne doit pas produire de brouillage, et (2) l'utilisateur de l'appareil doit accepter tout brouillage radioélectrique subi, même si le brouillage est susceptible d'en compromettre le fonctionnement.

Industry Canada ICES-003 Compliance Label:

CAN ICES-3 (B)/NMB-3(B)

Co-located

This device and its antenna(s) must not be co-located or operating in conjunction with any other antenna or transmitter.

[Responsible Party Information]

Name : Hee-Tack Ryu

Address : 100, Saneop-ro 156beon-gil, Gwonseon-gu, Suwon-si, Gyeonggi-do, Korea

Email : shadow@seoyonelec.com