WAVLINK

see the world

Full-duplex Wireless Intercom Headset

Model: WI810H

@WavlinkOfficial

@WavlinkTechSupport

Table of contents:

- About This Guide
  - Conventions
  - More Info
  - Speed/Coverage Disclaimer
  - Safety Instructions
  - Copyright Statement
  - WEEE Directive & Product Disposal
- Chapter 1 Overview
  - Package Content
  - Product Overview
  - LED Indicator
- Chapter 2 How to Use
  - Button Operation
  - Headset Using
  - Recharging/Replacing the Battery
- Chapter 3 Battery Compartment
- Chapter 4 FAQ
  - FAQ
  - Aftersale Service
- Chapter 5 Aftersale-Service_CE_FCC
  - Safety and Emission Statement

About This Guide

This guide is a complement to Quick Installation Guide. The Quick Installation Guide provides instructions for quick internet setup, while this guide contains details of each function and demonstrates how to configure them.

When using this guide, please notice that features of the router may vary slightly depending on the model and software version you have, and on your location, language, and internet service provider. All screenshots, images, parameters and descriptions documented in this guide are used for demonstration only.

Conventions

In this guide the following conventions are used :

Convention	Description
Underlined	Underlined words or phrases are hyperlinks. You can click to redirect to a website or a specific section.
Teal	The content and text that needs to be emphasized on the web page is the theme color `#1D428A` , including menus, items, buttons, etc.
>	The menu structures to show the path to load the corresponding page. For example,**More > Network > Mode Selection** means the Mode Selection function page is under the Network menu that is located in the More tab.
Note:	Do not ignore this type of comment, it is to remind you to better use the device, to avoid the operation of the error that will cause the function to be invalid.
Tips:	Indicates important information that helps you make better use of your device.

More Info

The latest software, management app and utility are available from the Download Center at **https://docs.wavlink.xyz/Firmware/** .

A quick installation guide can be found in this guide.

Specifications can be found on the product page at **https://docs.wavlink.xyz/**.

If you encounter any issues, please don’t hesitate to email **contact@wavlink.com** to provide feedbacks or contact online customer service, thank you !

Speed/Coverage Disclaimer

*Maximum wireless signal rates are the physical rates derived from IEEE Standard 802.11 specifications. Actual wireless data throughput and wireless coverage are not guaranteed and will vary as a result of 1) environmental factors, including building materials, physical objects, and obstacles, 2) network conditions, including local interference, volume and density of traffic, product location, network complexity, and network overhead, and 3) client limitations, including rated performance, location, connection, quality, and client condition.

Information in this document is subject to change without notice.The manufacturer does not make any representations or warranties (implied or otherwise) regarding the accuracy and completeness of this document and shall in no event be liable for any loss of profit or any commercial damage,including but not limited to special, incidental, consequential, or other damage.

Safety Instructions

Always read the safety instructions carefully.

Keep this Quick Start Guide for future reference.

Keep this equipment away from humidity.

If any of the following situation arises, get the equipment checked by a service technician:

The equipment has been exposed to moisture.

The equipment has been dropped and damaged.

The equipment has an obvious sign of breakage.

The equipment has not been working well or you cannot get it work according to Quick start Guide.

Copyright Statement

No part of this publication may be reproduced in any form by any means without the prior written permission.

Other trademarks or brand names mentioned herein are trademarks or registered trademarks of their respective companies.

WEEE Directive & Product Disposal

At the end of its serviceable life, this product should not be treated as household or general waste. It should be handed over to the applicable collection point for the recycling of electrical and electronic eauipment, or returned to the supplier for disposal.

Chapter 1 Overview

This chapter contains the following sections :

- Package Content
- Product Overview
- LED Indicator

Package Content

There are the following items in the box, please check before using:

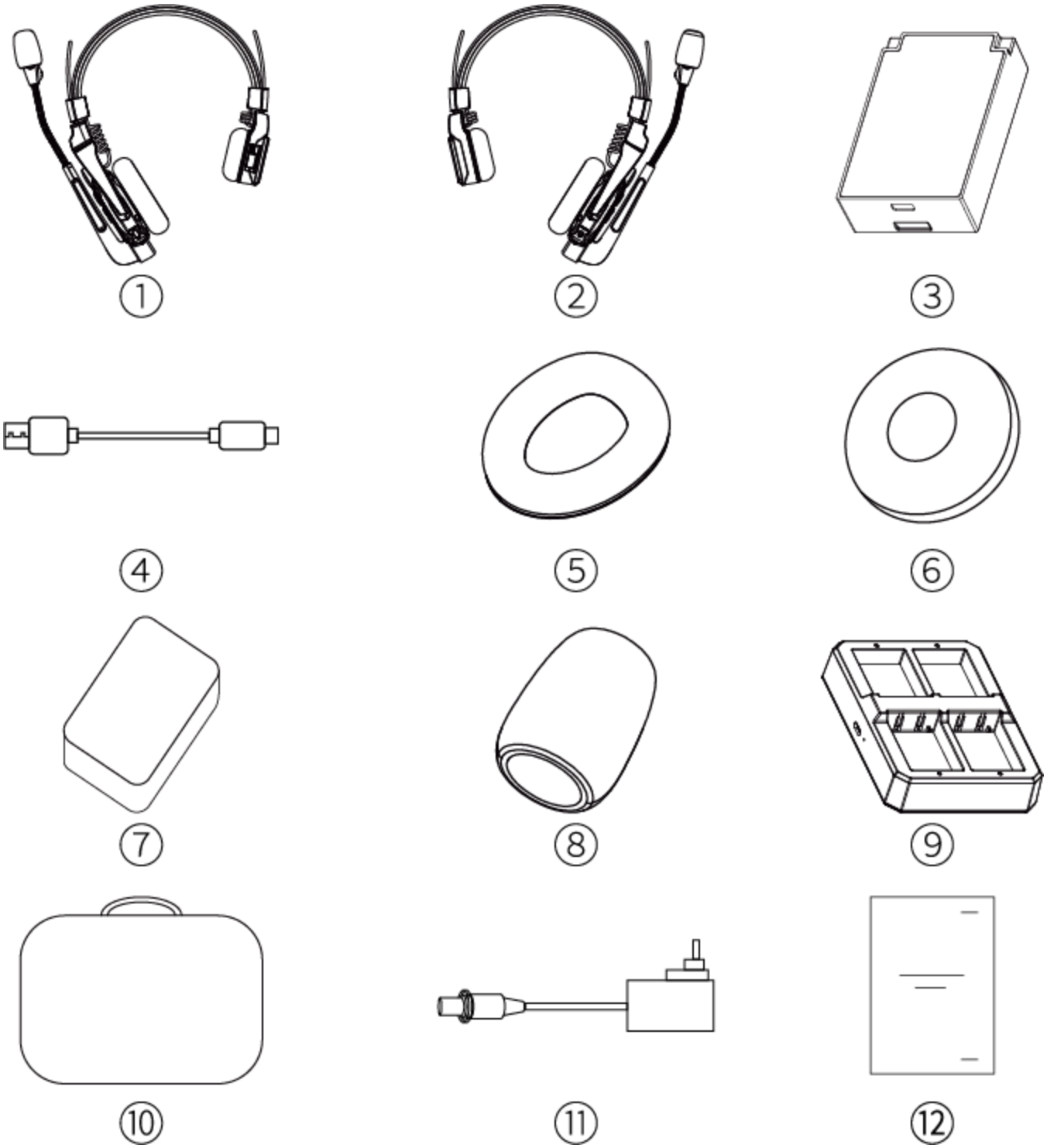

① Master Headset

② Remote Headset

③ Detachable Lithium Battery

④ USB-A to USB-C Cable

⑤ Headset Ear Cushion

⑥ Round Foam Ear Cushion

⑦ On-ear Foam Cushion

⑧ Microphone Cover

⑨ 4-Seater Battery Charging Station

⑩ Storage Bag

⑪ USB-C Power Adapter (for Battery Charging Station)

⑫ Quick Start Guide

Product Overview

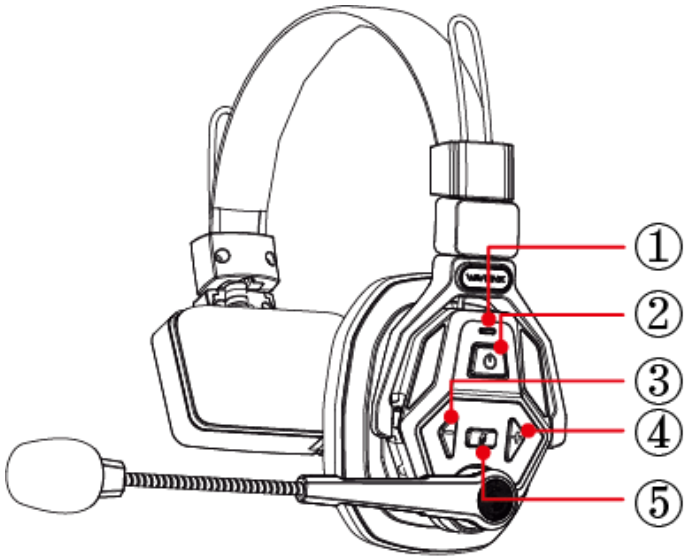

Master Headset

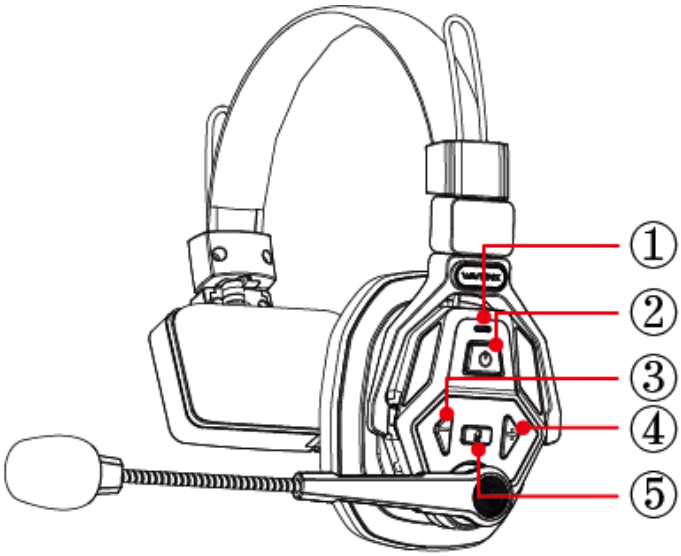

Remote Headset

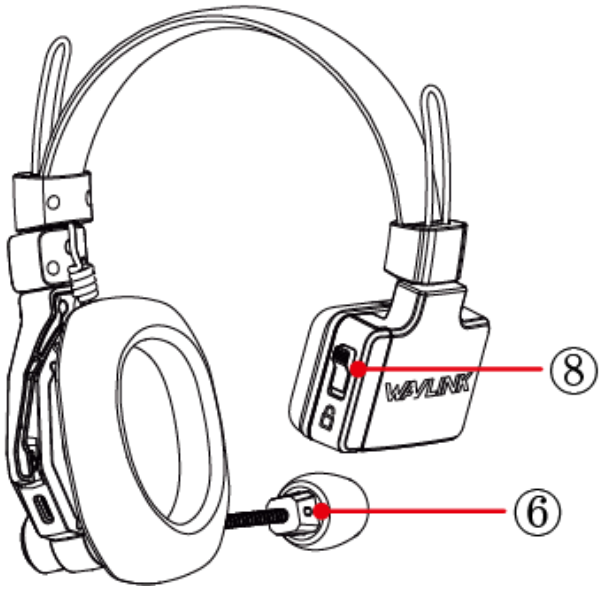

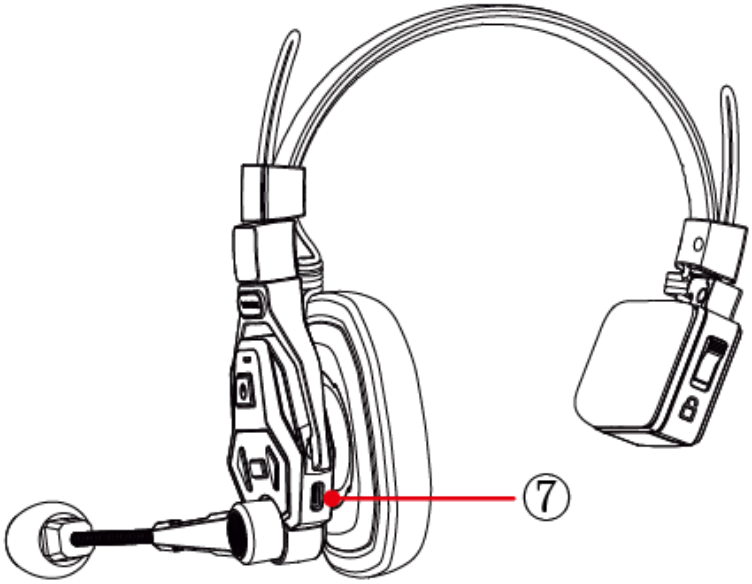

① SYS/Status Indicator

② Power Button

③ Volume-/Clear

④ Volume+/Pair

⑤ Mute

⑥ Audio Indicator

⑦ Type-C Port

⑧ Battery Compartment

LED Indicator

Indicator	Status	Description
SYS/Status	Blue on	The Master/Remote Headset has been enabled and normally connected to the Remote/Master (Full Charged).
SYS/Status	Flashing blue	The Master/Remote Headset has been enabled and not normally connected to the Remote/Master Headset.
SYS/Status	Red on	The battery level is below 20%, it needs to be charged.
SYS/Status	Green on	Be off automatically after fully charged.
MIC	Red on	MUTE on.
MIC	Green on	The MIC is working properly.

Chapter 2 How to Use

This chapter contains the following sections :

- Button Operation
- Headset Using
- Recharging/Replacing the Battery

Button Operation

Operation	Description
Power Button	Long-press over 3s to turn on/off
Volume+/Pair Button	Long-press 3s to pair with the Master Headset, short-press to increase the volume.
Volume-/Clear Button on Master Headset	Long-press 12s to clear paired Master Headsets information, and the Headset Remote restarts after successful clearing Short-press to decrease the volume.
Mute Button	Short-press to mute or unmute the headset.
Mic Boom	Swivel over the top 270-degrees, can be worn on either side, and activates mute when upright and communicates when vertical.
Type-C Charging Port	Charging the Battery while connecting to an USB-C cable.

Headset Using

1. Put on the headset and adjust to a comfortable size and position.

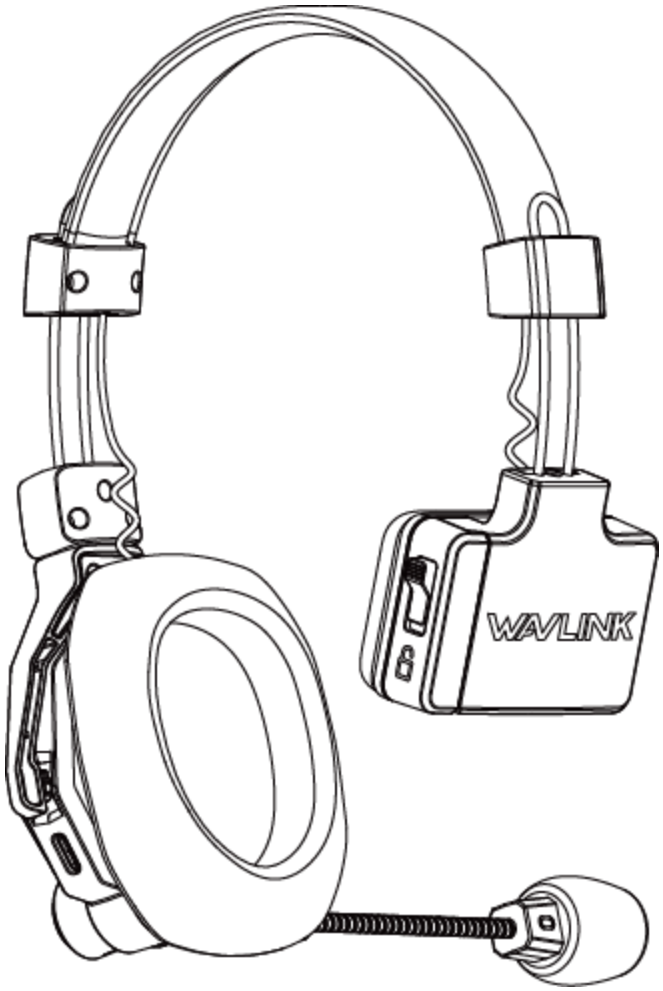

2. Press and hold the power button to turn on/off the Master/Remote headset.

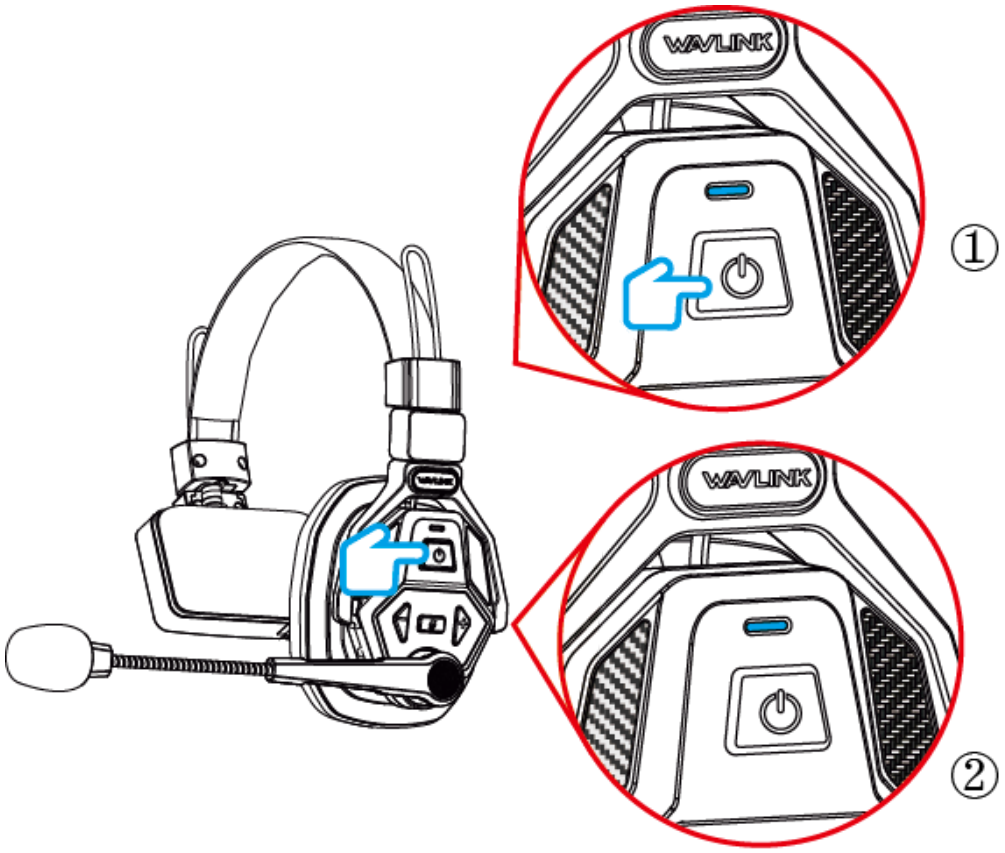

①Successful Pairing-Solid Blue(Full Charged)

②Failed Pairing-Flashing Blue(Full Charged)

3. They are paired at the factory, the connection will be established once they are powered on. If they are disconnected, try to pair them as the following steps:

3.1 If it is pairing with a repaired or replaced Remote Headset, before pairing with another Remote Headset, long pressing **Volume-/Clear Button** on the Master Headset for 10s to clear the paird information, the Master Headset automatically switches to restart status.

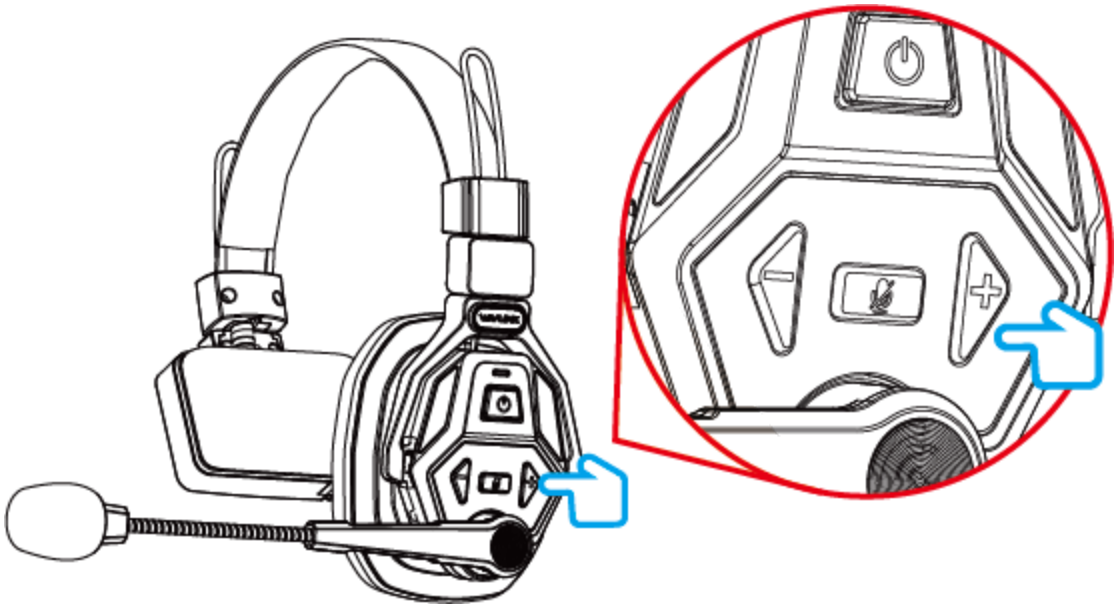

- A solid blue light indicates a full charge. In this state, a slow blue flash means no remote headset is detected.

Note:

- Each Master Headset can be paired with up to 8 Remote Headsets. To add a new Remote Headset, long-press the Pair button on the Master Headset.
- A Remote Headset can only be paired with one Master Headset at a time. Therefore, before pairing with a new Master Headset, the Remote Headset must first be unpaired from the previous one.

4. Adjust the boom and position of the microphone capsule.
   4.1. Adjusting Mic Position

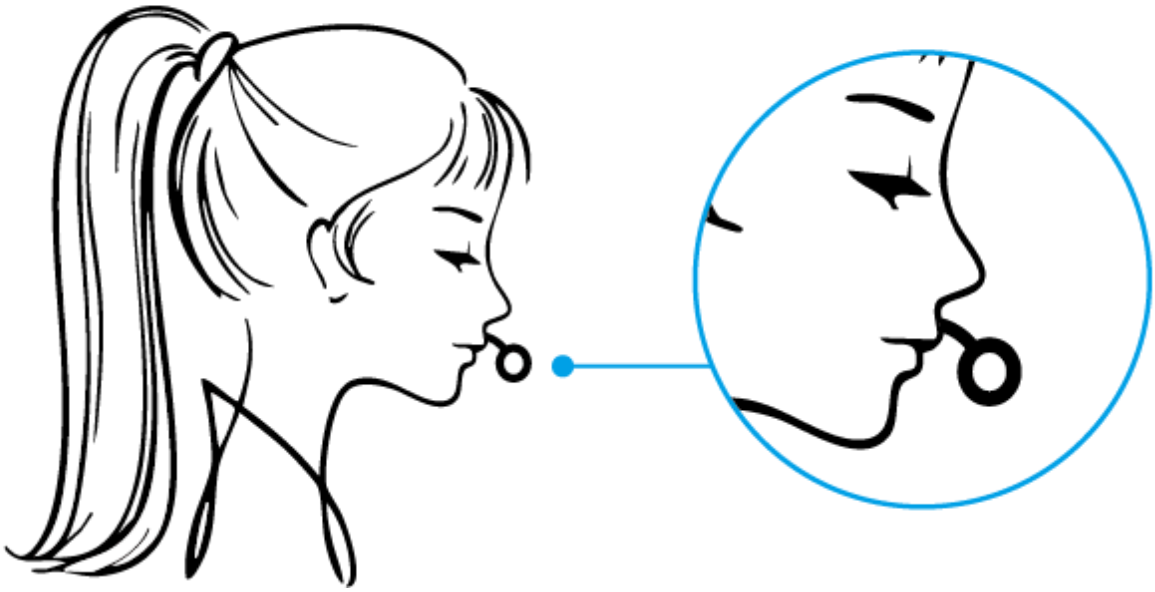

- For best sound quality, keep the microphone about 2 cm from your mouth.

4.2. Mute or Unmute

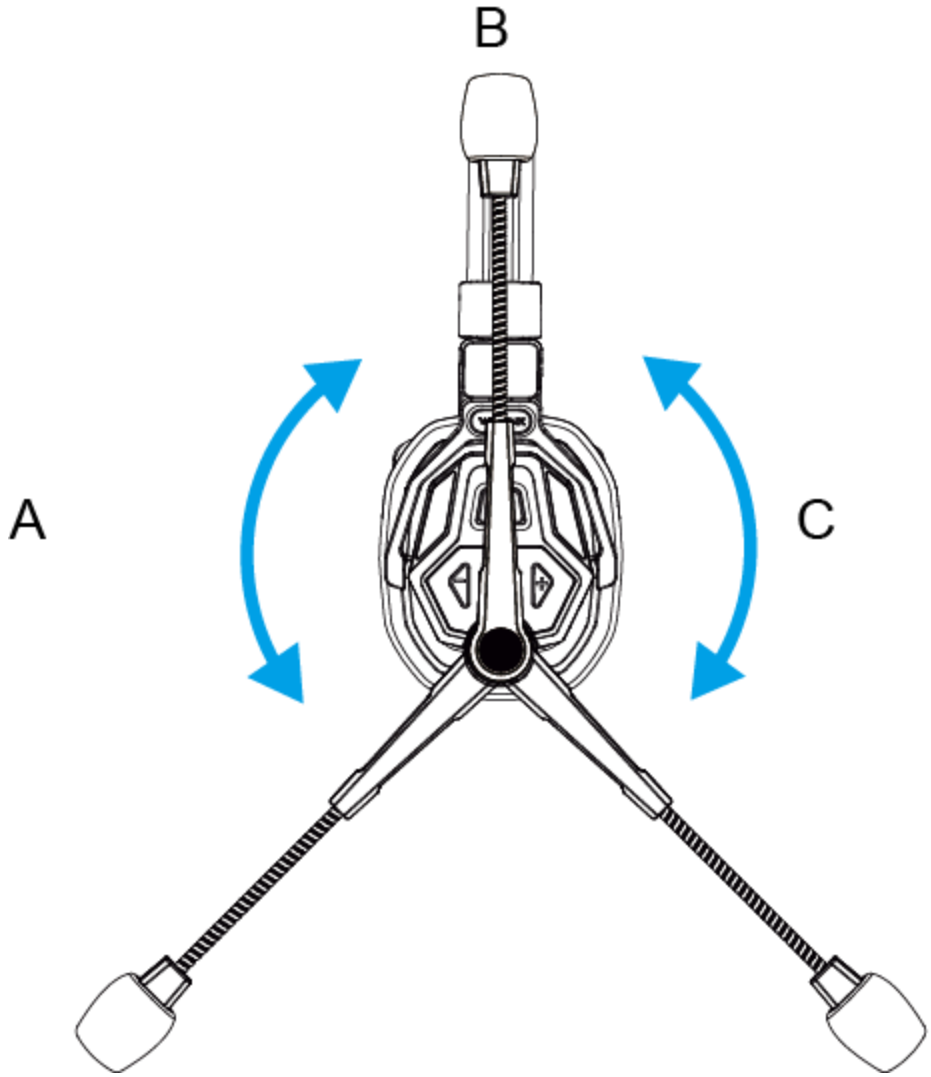

A/C: Unmute

B: Mute

Recharging/Replacing the Battery

1. Charge the Battery as the picture shown if it is low:

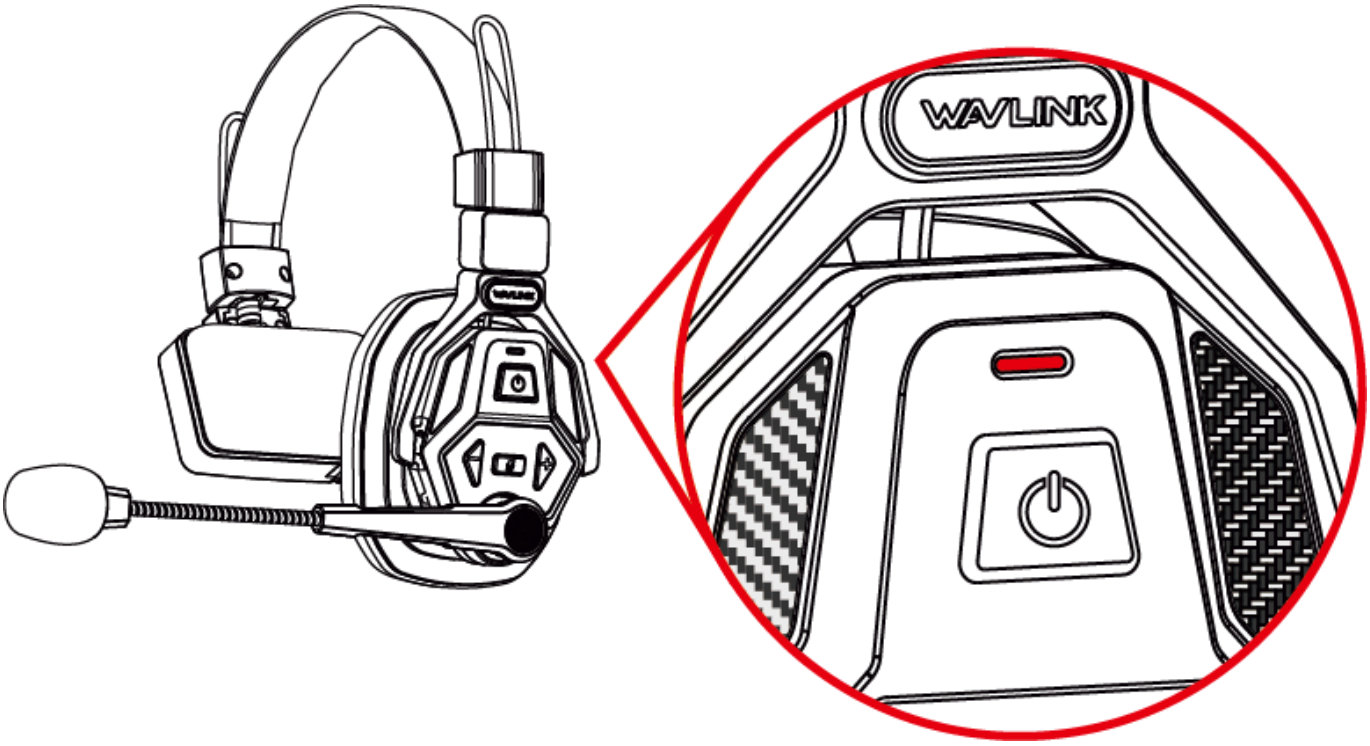

- The indicator turns solid red when the battery drops below 20%.

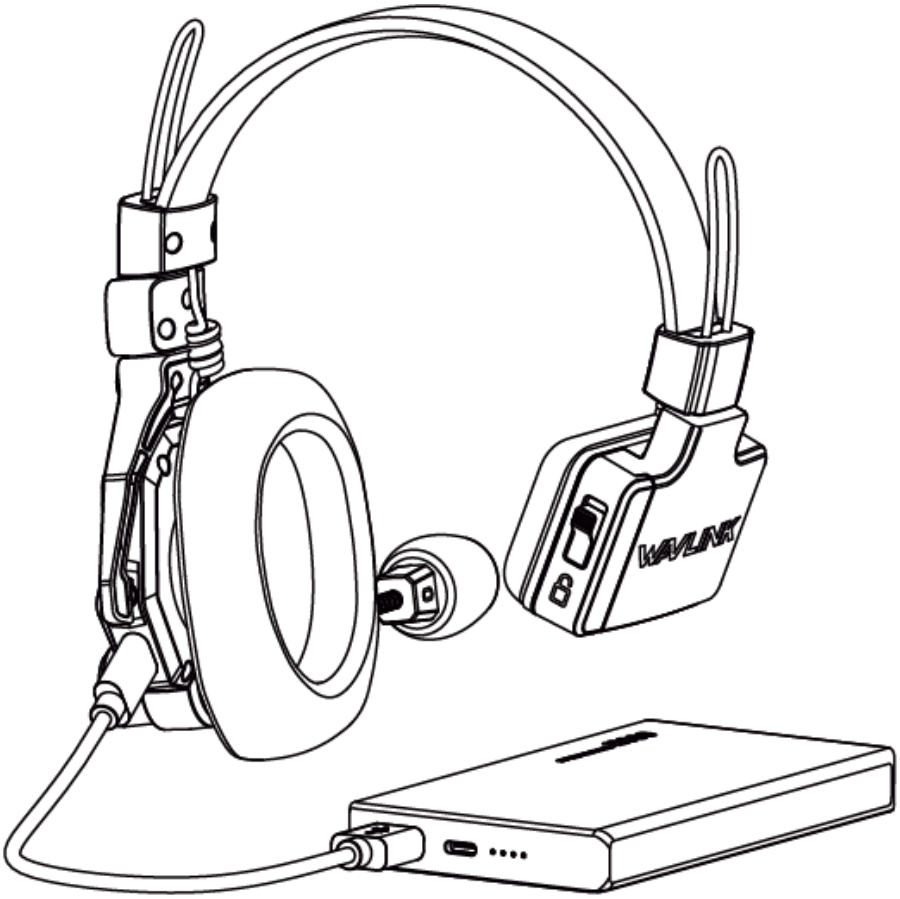

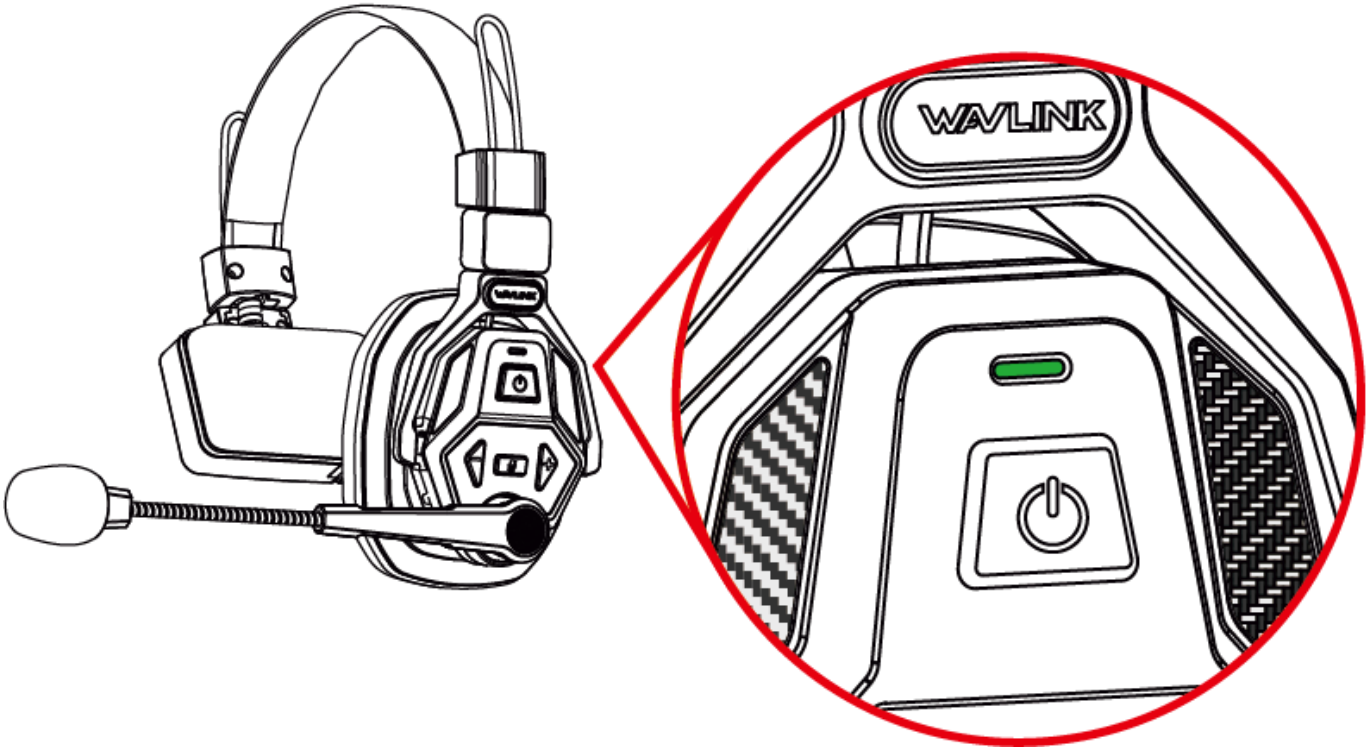

- The headset remains off during charging.
- The indicator flashes green during charging and turns off when fully charged.

Chapter 3 Battery Compartment

Step 1. If the battery is low, charge it as the below:

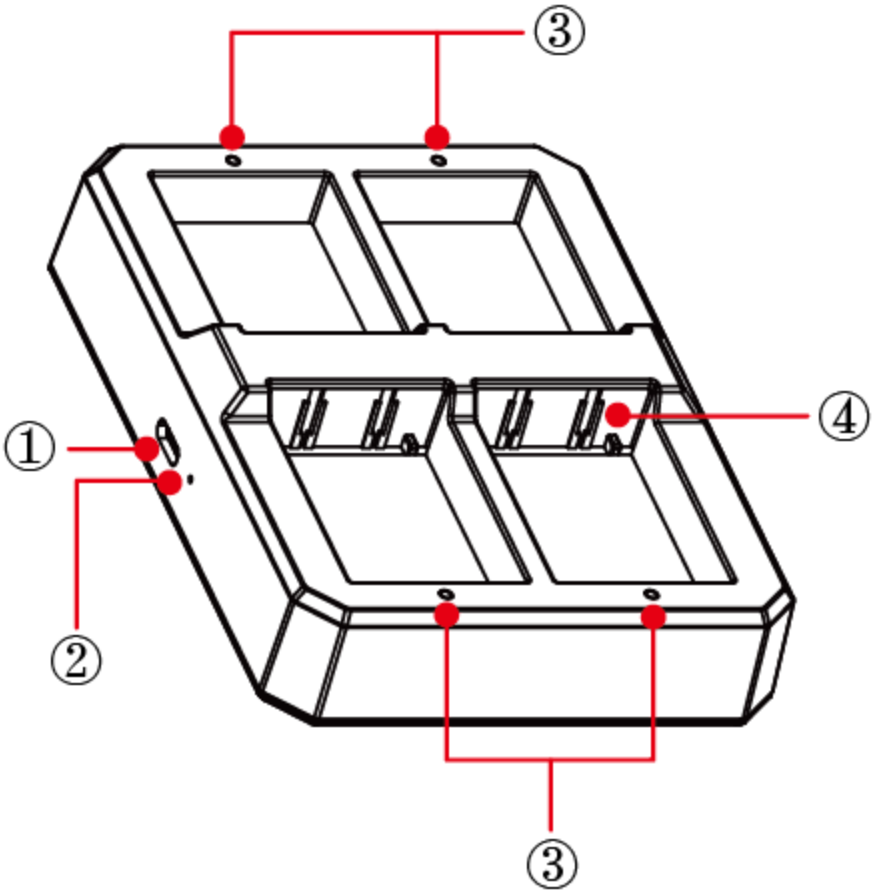

① USB-C Power IN

② Power LED(Solid Green)

③ Charging Indicator: Solid Green-In charging Off-Fully charged

④ Charging Contacts

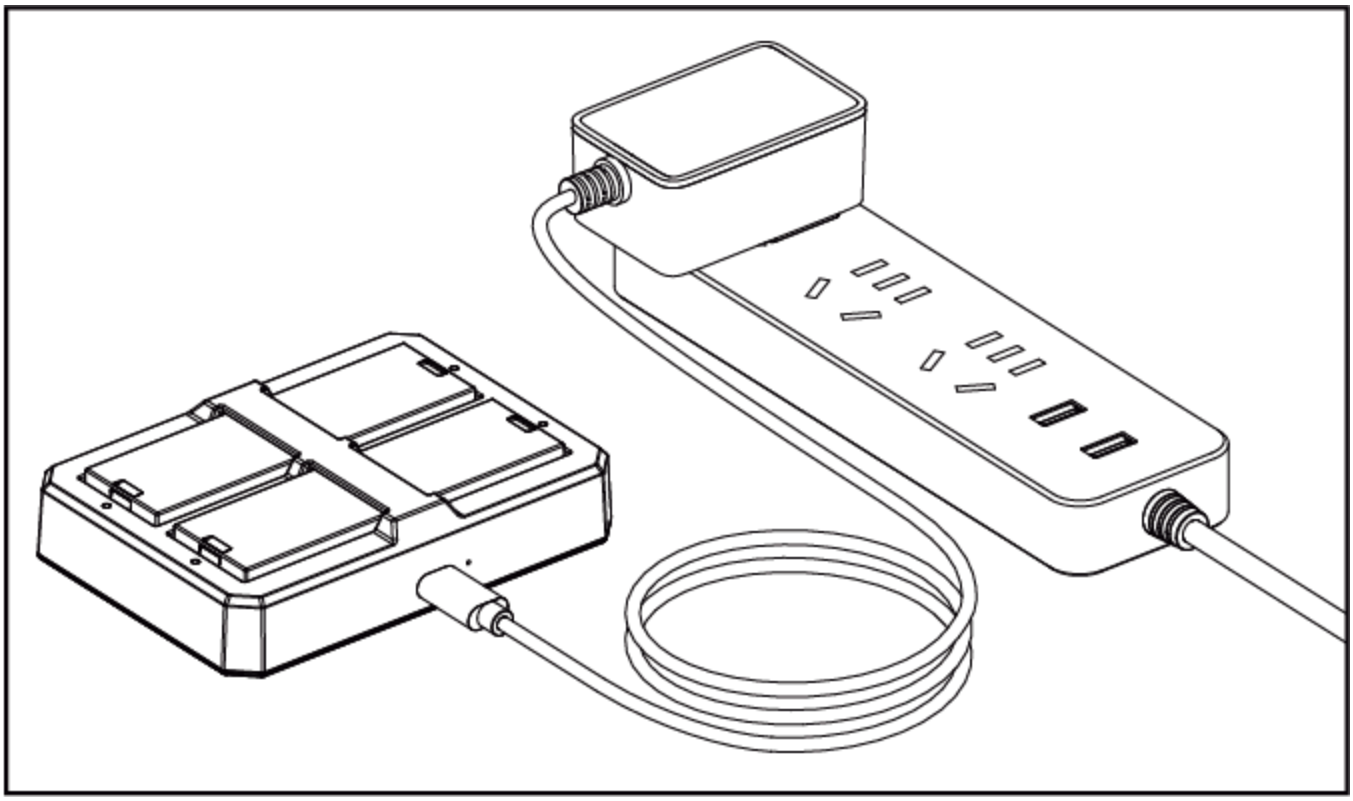

To replace the battery, follow these steps:

Step 2. Press the release button to unlock the battery, then remove it from the compartment.

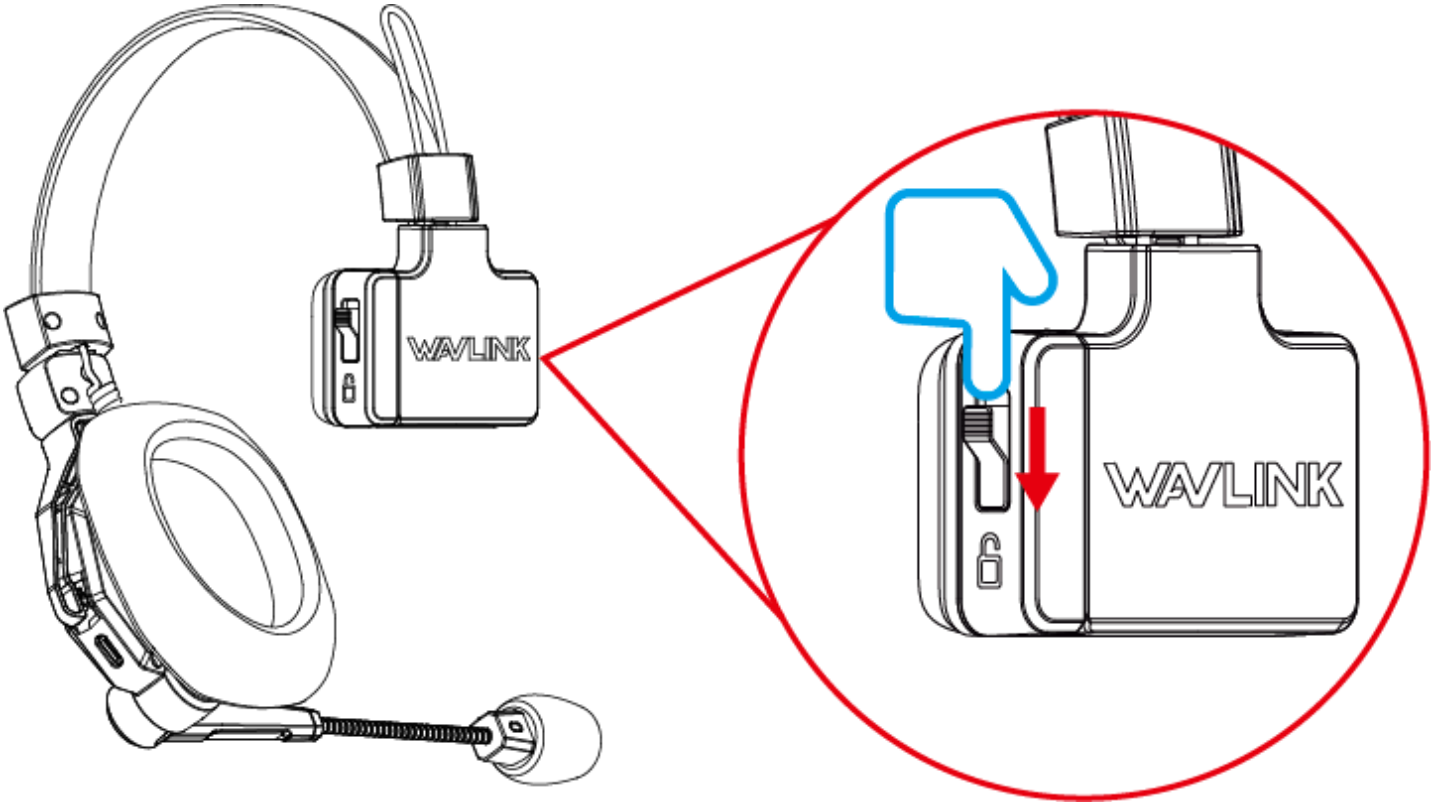

Step 3. Insert the battery into the compartment, ensuring the contacts are properly aligned.

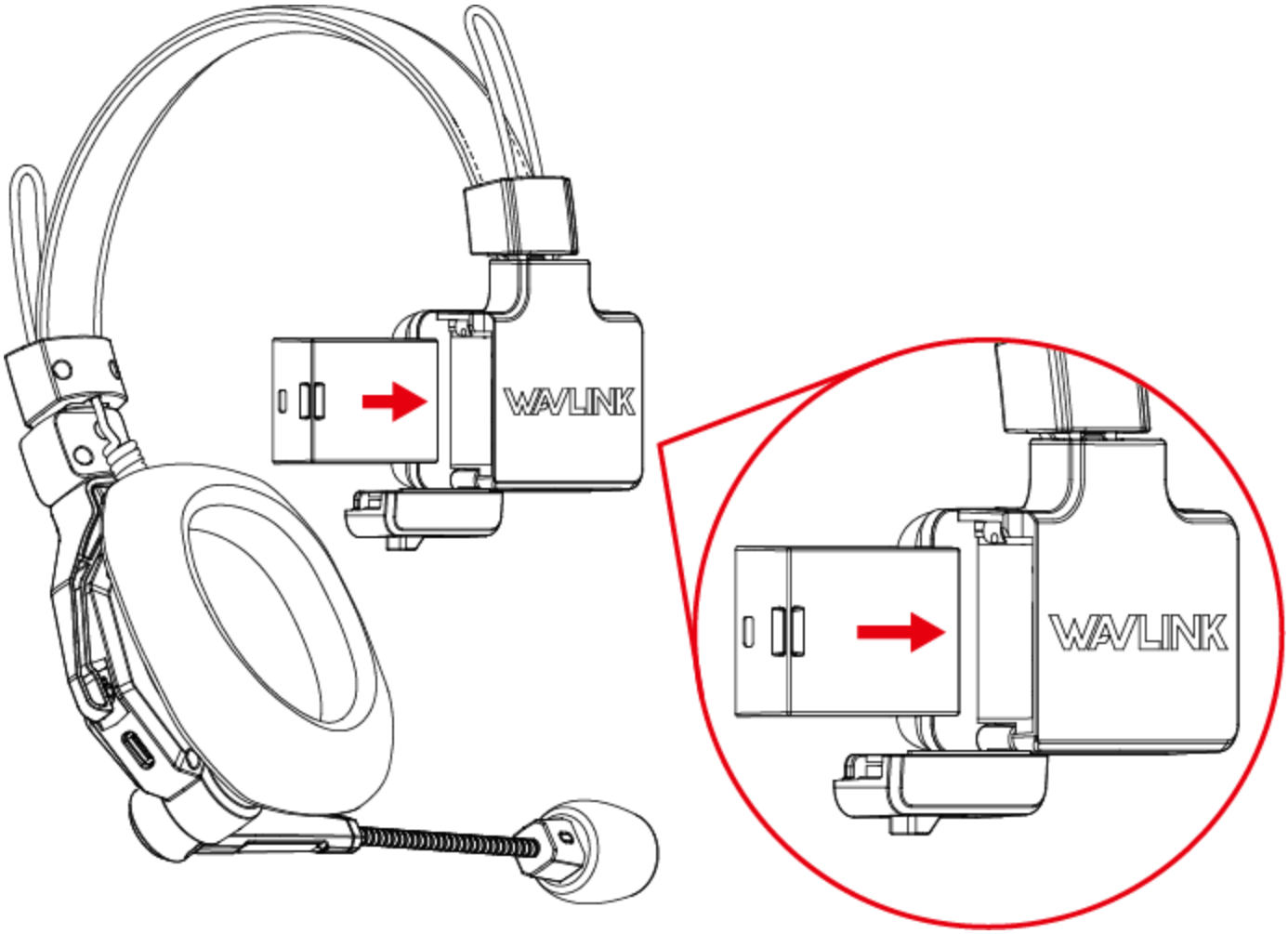

Step 4. Apply pressure to firmly push the battery into place.

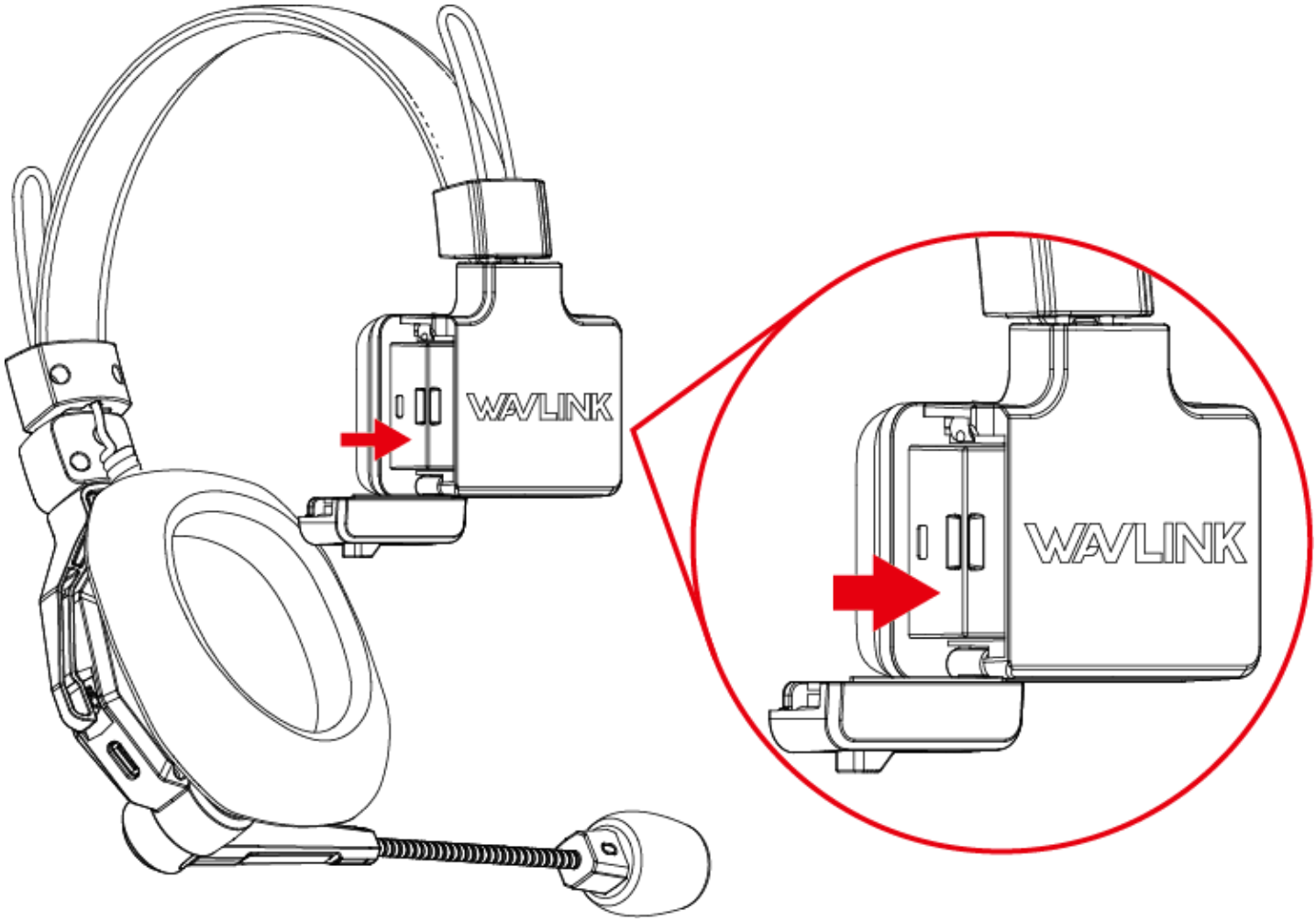

Step 5. Once the battery is properly seated, press the lock on the cover of battery compartment upwards to lock the cover.

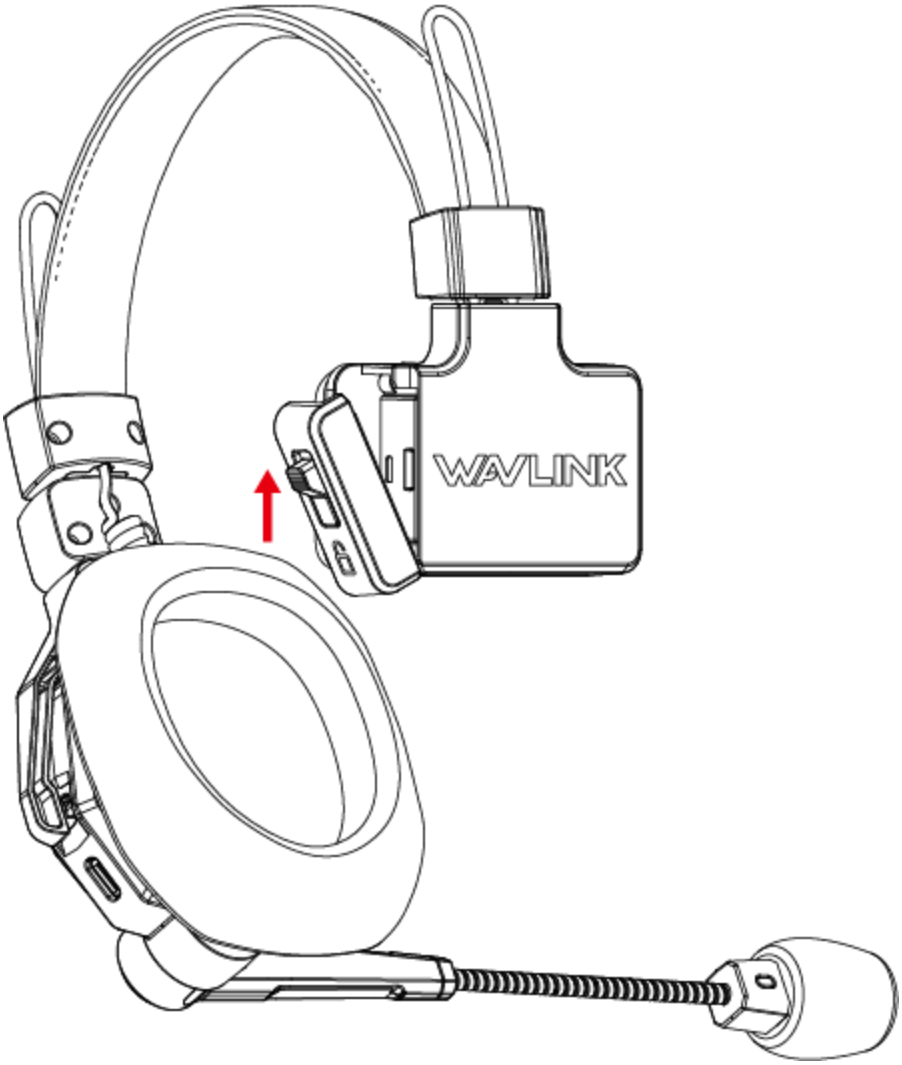

Item	Parameter
Battery	1×Master Headset+1×Remote Headset: 8h 1×Master Headset+3×Remote Headset: 5.5h 1×Master Headset+5×Remote Headset: 4h 1×Master Headset+8×Remote Headset: 2.5h
Full Charging Time	2.5h

Chapter 4 FAQ

- FAQ
- GNU General Public License Notice
- Aftersale Service

FAQ

Q1. How long will it need to be fully charged? How long will the battery last when fully charged?

A1. 2.5h. And the Master Headset can work 2.5h while working with 8 Remote Headsets, and 4h while working with 5 Remote Headsets.

Q2. Why is there disconnection between Master Headset and Remote Headsets? How to restore the connection?

A2. If the Master Headset is power-off, or the remote headset is out of the transmission range of the master earphone, the disconnection will occur with two beeps, the SYS/Status Indicator on Remote Headset switches to flashing blue from solid blue simultaneously. Try to power on the Master Headset or keep the distance in avaible range, the Master/Remote Headset will automatically restore connection with the solid blue indicator on Remote Headset and one beep.

Aftersale Service

Need help?

We're here for you!

Online support: wavlink.com
Available Mon-Fri 8:30 am-5:30pm (UTC+8)

support@wavlink.com
Available Mon-Fri 8:30 am-5:30pm (UTC+8)

+1 8889730883
Mon-Fri 9:00 am - 6:00 pm (UTC-5)

www.wavlink.com

Thank you for purchasing WAVLINK product!

Chapter 5 Aftersale-Service_CE_FCC

• Safety and Emission Statement

Safety and Emission Statement

CE Mark Warning

This is a Class B product. In a domestic environment,
this product may cause radio interference,
in which case the user may be required to take adequate measures.

NOTE:

(1)The manufacturer is not responsible for any radio or TV interference caused by unaut horized modifications to this equipment.

Declaration of Conformity

Hereby, Winstars Technology Limited,
The full text of the EU declaration of conformity is available at the following Internet add ress:https://www.wavlink.com/en_us/ce.html

FCC Statement

This device complies with Part 15 of the FCC Rules. Operation is subject to the following two conditions: (1) This device may not cause harmful interference, and (2) this device must accept any interference received, including interference that may cause undesired operation.

This equipment has been tested and found to comply with the limits for a Class B digital device, pursuant to Part 15 of the FCC Rules. These limits are designed to provide reasonable protection against harmful interference in a residential installation. This equipment generates, uses and can radiate radio frequency energy and, if not installed and used in accordance with the instructions, may cause harmful interference to radio communications. However, there is no guarantee that interference will not occur in a particular installation. If this equipment does cause harmful interference to radio or

television reception,which can be determined by turning the equipment off and on, the user is encouraged to try to correct the interference by one of the following measures:

- Reorient or relocate the receiving antenna.
- Increase the separation between the equipment and receiver.
- Connect the equipment into an outlet on a circuit different from that to which the receiver is connected.
- Consult the dealer or an experienced radio/TV technician for help.

FCC Caution: Any changes or modifications not expressly approved by the party responsible for compliance could void the user's authority to operate this equipment.

This transmitter must not be co-located or operating in conjunction with any other antenna or transmitter.

The manufacturer is not responsible for any radio or TV interference caused by unauthorized modifications to this equipment.

Radiation Exposure Statement

This device complies with FCC radiation exposure limits set forth for an uncontrolled environment and it also complies with Part 15 of the FCC RF Rules.

NOTE:

(1) The manufacturer is not responsible for any radio or TV interference caused by unauthorized modifications to this equipment.

"Privacy of communications may not be ensured when using this phone."