0.3m (1ft) Low Profile Antennas Microwave Antenna Specifications

Document ID: DOC-00049476 Revision: a.02 Release Date: 29/08/2016

General Specifications

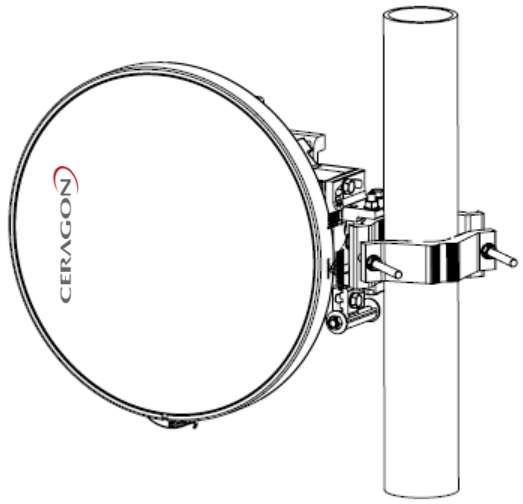

Nominal diameter	0.3m (1ft)
Polarization	Single, Vertical or Horizontal
Radio interface	Direct Mount for RFU-C type ODU
Antenna color	NCS S 2502 R Grey
Radome color	NCS S 2502 R Grey
Radome type	UV Stabilized PC
Packing type	Carton
Gross weight, kg	6,9 - 8,8
Packed dimensions, mm	L x W x H 395 x 395 x 285 (11-38GHz) L x W x H 395 x 395 x 310 (42-80GHz)
Packing Volume, m³	0.044 (11-38GHz) 0,048 (42-80GHz)

Electrical Specifications

Antenna Marketing Model	**Am-1-11W-CR1**	**Am-1-13-CR1**	**Am-1-15-CR1**	**Am-1-18-CR1**	**Am-1-23-CR1**
PN	**AN-2500-0**	**AN-2501-0**	**AN-2502-0**	**AN-2503-0**	**AN-2504-0**
Frequency Band (GHz)	10.000 - 11.700	12.750 - 13.250	14.400 - 15.350	17.700 - 19.700	21.200 - 23.600
Waveguide Interface	UBR100	UBR120	UBR140	UBR220	UBR220
Gain (dBi) Low	29.0	30.6	31.9	33.7	35.8
Gain (dBi) Mid	30.1	31.8	32.4	34.7	35.8
Gain (dBi) High	29.7	32.3	32.5	34.5	35.9
3 dB BW (°)	5.8	4.0	4.4	3.2	2.7
VSWR	1.33	1.30	1.30	1.30	1.30
F/B Ratio (dB)	56	57	60	62	60
XPD (dB)	30	30	30	30	30
ETSI Compliance	R1, C2	R1, C3	R2, C3	R2, C3	R3, C3
FCC Compliance	N/A	N/A	N/A	Cat B2	Cat A
RPE Number	906-HAE1103	906-HAE1303	906-HAE1503	906-HAE1803	906-HAE2303

Copyright © 2015 by Ceragon Networks Ltd. All rights reserved.

Antenna Marketing Model	**Am-1-26-CR1**	**Am-1-28-CR1**	**Am-1-32-CR1**	**Am-1-38-CR1**	**Am-1-42-CR1**
PN	**AN-2505-0**	**AN-2506-0**	**AN-2507-0**	**AN-2508-0**	**AN-2509-0**
Frequency Band (GHz)	24.000 - 26.500	27.500 - 29.500	31.000 - 33.400	37.000 - 40.000	40.500 - 43.500
Waveguide Interface	UBR220	UBR320	UBR320	UBR320	UG-383/U Modified
Gain (dBi) Low	36.9	37.3	38.6	40.2	40.9
Gain (dBi) Mid	37.0	37.9	38.4	40.4	41.2
Gain (dBi) High	36.5	38.1	38.6	40.1	41.3
3 dB BW (°)	2.3	2.3	1.8	1.7	1.5
VSWR	1.30	1.30	1.30	1.30	1.30
F/B Ratio (dB)	71	64	58	58	59
XPD (dB)	30	30	30	30	30
ETSI Compliance	R4, C3	R4, C3	R5, C3	R5, C3	R5, C3
FCC Compliance	Cat A	N/A	N/A	Cat A	N/A
RPE Number	906-HAE2603	906-HAE2803	906-HAE3203	906-HAE3803	906-HAE4203

Antenna Marketing Model	**Am-1-80-CR1**
PN	**AN-2510-0**
Frequency Band (GHz)	71.000 – 86.000
Waveguide Interface	UG-383/U Modified
Gain (dBi) Low	46.6
Gain (dBi) Mid	47.0
Gain (dBi) High	47.5
3 dB BW (°)	0.77
VSWR	1.50
F/B Ratio (dB)	63
XPD (dB)	30
ETSI Compliance	R7, C3
FCC Compliance	OK
RPE Number	906-HAE8003

Mechanical Specifications

Wind Velocity Operational, km/h	180
Wind Velocity Survival Rating, km/h	250
Ice Load, mm	25
Azimuth Adjustment, Degrees	±15
Elevation Adjustment, Degrees	±15
Mounting Pipe Diameter, mm	50 to 120
Net weight, kg	10/11GHz 5,4kg 13 GHz 5,6kg 15 GHz 5,5kg 18 GHz 5,3kg 23 GHz 5,2kg 24/26 GHz 5,2kg 28 GHz 5,2kg 32 GHz 5,0kg 38 GHz 5,0kg 42 GHz 6,8kg 80 GHz 6,8kg
Feed horn, Operational Pressure, KPa	40
Operational Temperature, °C	-45 to +55
Storage Temperature, °C	-55 to +85
Adjustment Struts	None
Fixed Support Struts	None
Humidity	100%
Rain Intensity, mm/min	15
Solar Radiation, W/m2	1120
Electrical properties	ETSI EN 302 217-4-2
Vibration	ETSI 300 019-2-4 V2.2.2 (2003-04) T4.1E. 4M5
RoHS 2002/95/EC	Compliant

Outline Dimensions 11-38GHz

Antenna dimensions, mm	
A	50 to 120
B	371
C	191 (211 10/11GHz)
D	251
E	92

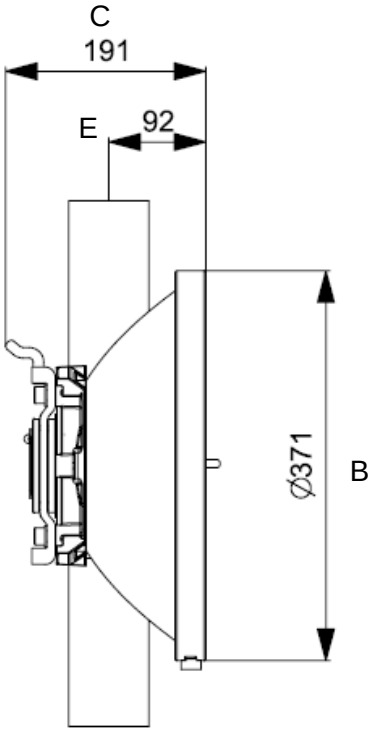

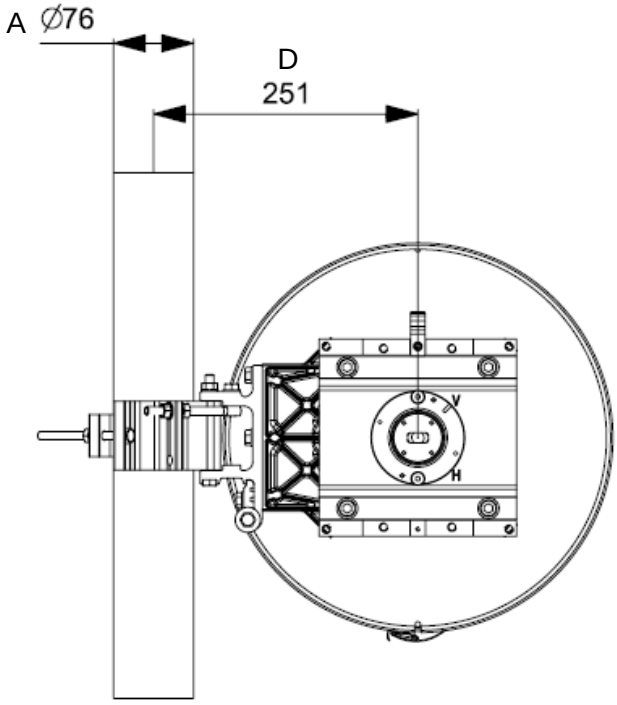

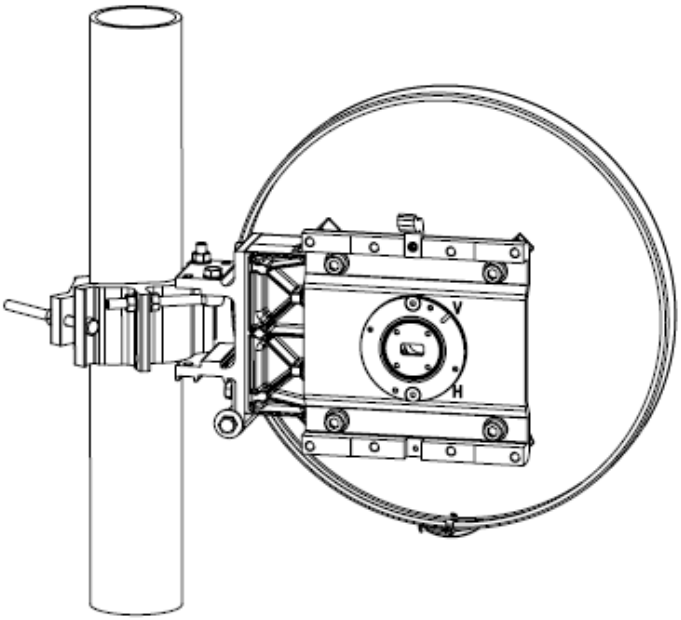

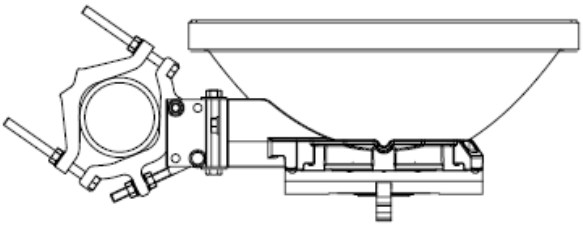

Outline Dimensions 42-80GHz

Antenna dimensions, mm	
A	50 to 120
B	382
C	217
D	248
E	148

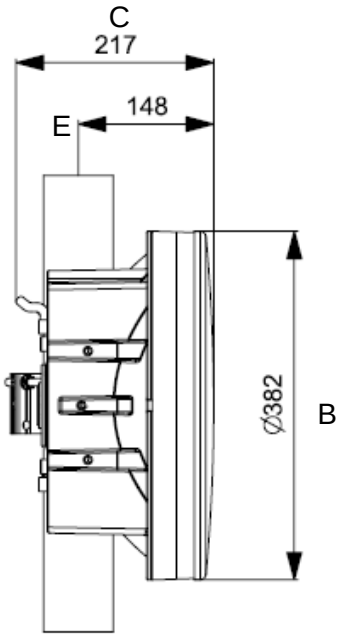

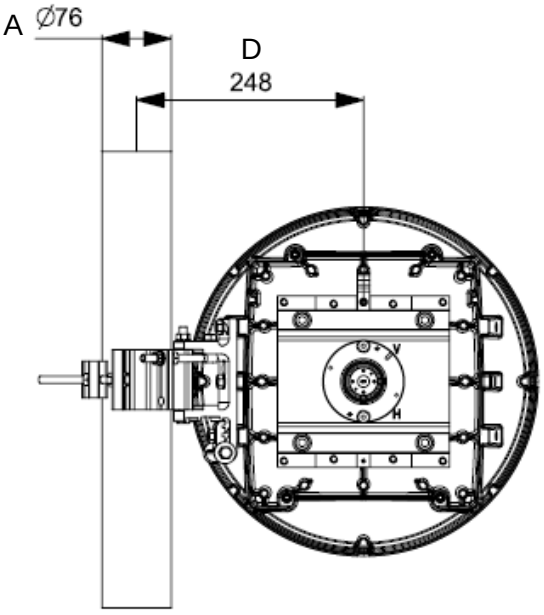

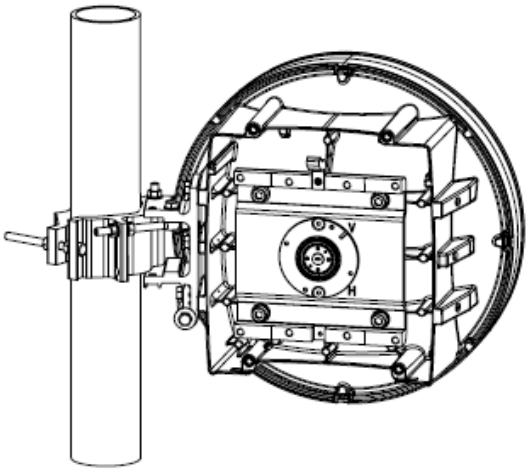

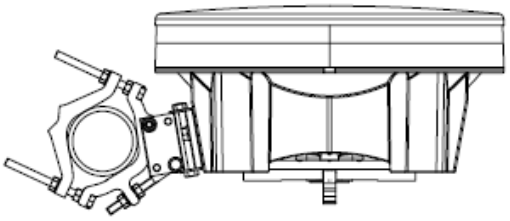

Wind Forces

The axial, side and twisting moment forces stated are maximum loads applied to the tower by the antenna at a survival wind speed of 250 km/h (70 m/s). They are, in every case, the result of wind from the most critical direction for each parameter. The individual maximums may not occur simultaneously. All forces are referenced to the antenna mounting pipe.

Axial Force (F_A), N	409 (372 on 42 - 80GHz)
Side Force (F_S), N	146 (135 on 42 - 80Ghz)
Twisting Moment (M_T), N•m	103/109

11-38 GHz

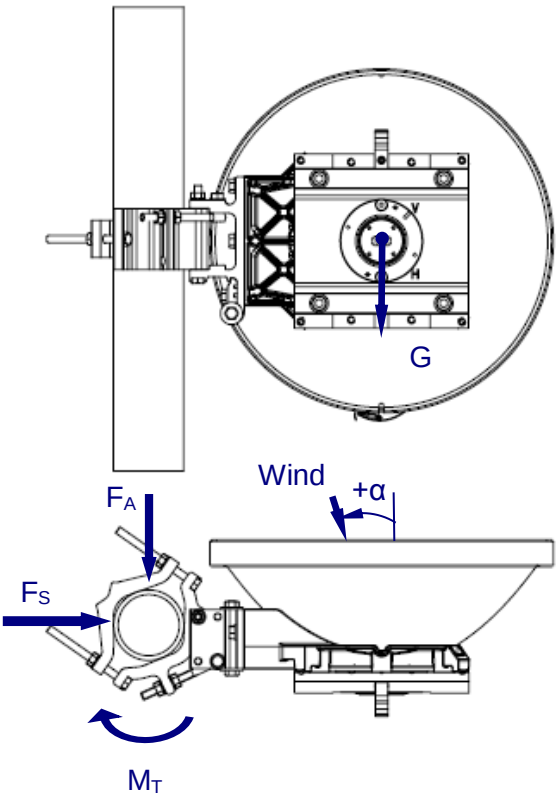

42-80 GHz

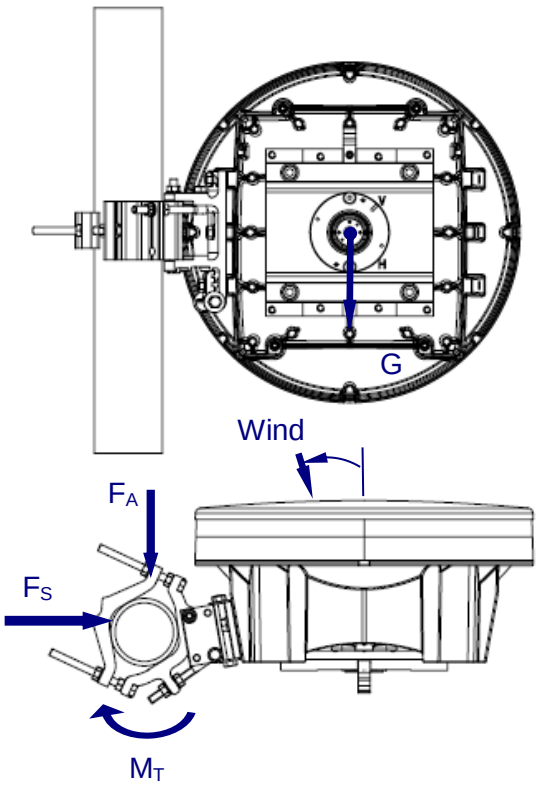

Radiation Pattern Envelope

Co-polar and Xp-polar response are represented for both horizontal and vertical polarizations. The curves are identified as follows:

HH – Response of horizontally polarized port to a horizontally polarized signal.

VV – Response of vertically polarized port to a vertically polarized signal.

XP – HV/VH

HV – Response of horizontally polarized port to a vertically polarized signal.

VH – Response of vertically polarized port to a horizontally polarized signal.

Am-1-11W-CR

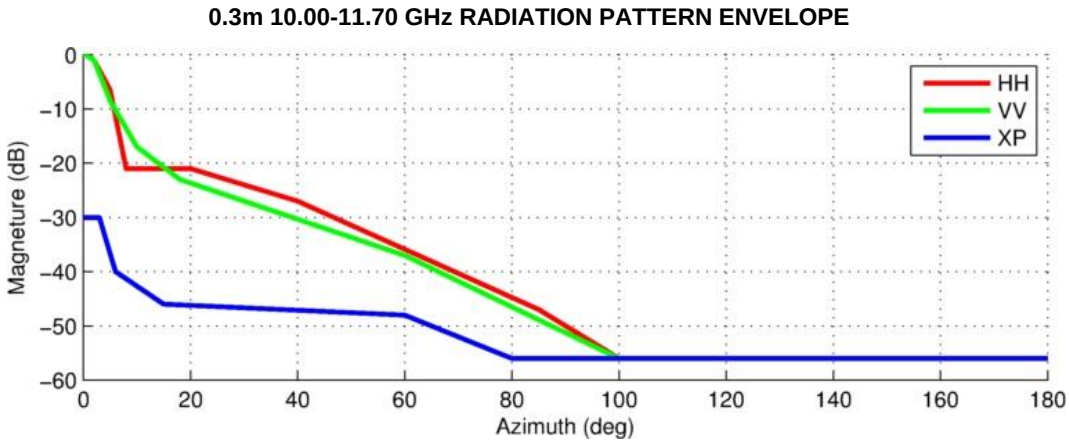

Radiation Pattern Envelope

Co-polar and Xp-polar response are represented for both horizontal and vertical polarizations. The curves are identified as follows:

HH – Response of horizontally polarized port to a horizontally polarized signal.

VV – Response of vertically polarized port to a vertically polarized signal.

XP – HV/VH

HV – Response of horizontally polarized port to a vertically polarized signal.

VH – Response of vertically polarized port to a horizontally polarized signal.

Am-1-13-CR

0.3m 12.75-13.25 GHz RADIATION PATTERN ENVELOPE

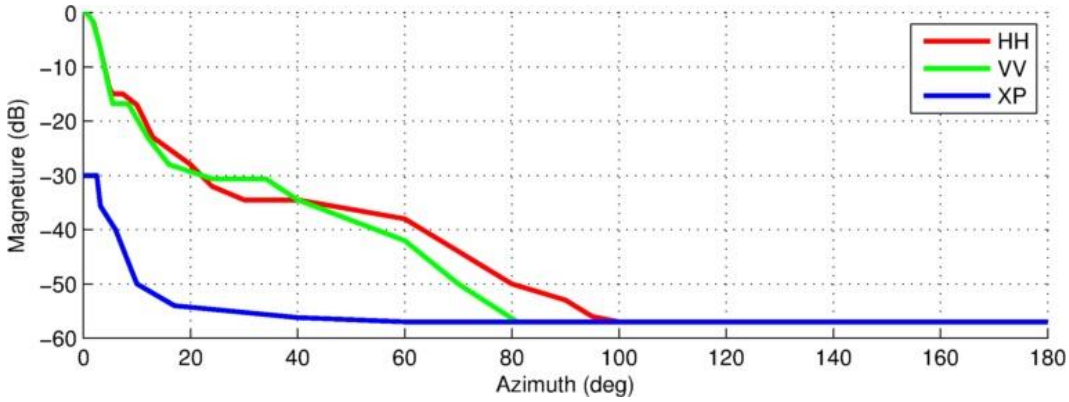

Radiation Pattern Envelope

Co-polar and Xp-polar response are represented for both horizontal and vertical polarizations. The curves are identified as follows:

HH – Response of horizontally polarized port to a horizontally polarized signal.

VV – Response of vertically polarized port to a vertically polarized signal.

XP – HV/VH

HV – Response of horizontally polarized port to a vertically polarized signal.

VH – Response of vertically polarized port to a horizontally polarized signal.

Am-1-15-CR

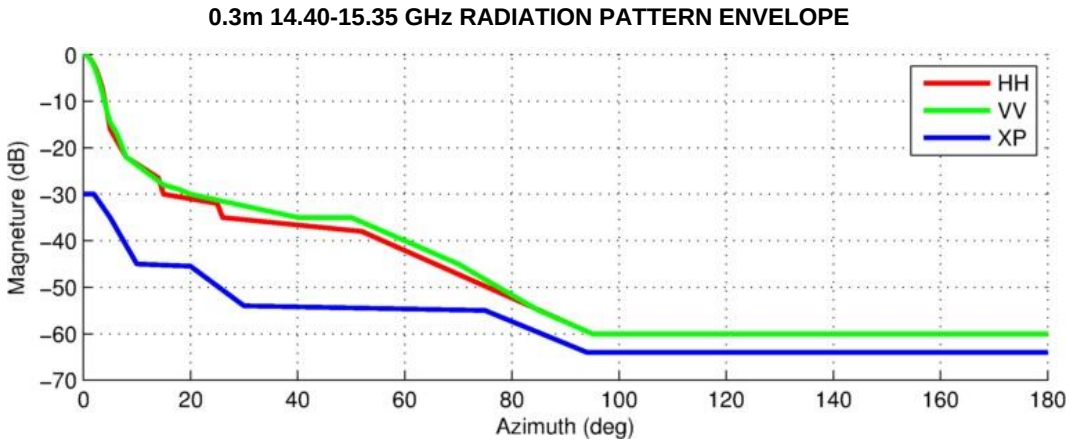

Radiation Pattern Envelope

Co-polar and Xp-polar response are represented for both horizontal and vertical polarizations. The curves are identified as follows:

HH – Response of horizontally polarized port to a horizontally polarized signal.

VV – Response of vertically polarized port to a vertically polarized signal.

XP – HV/VH

HV – Response of horizontally polarized port to a vertically polarized signal.

VH – Response of vertically polarized port to a horizontally polarized signal.

Am-1-18-CR

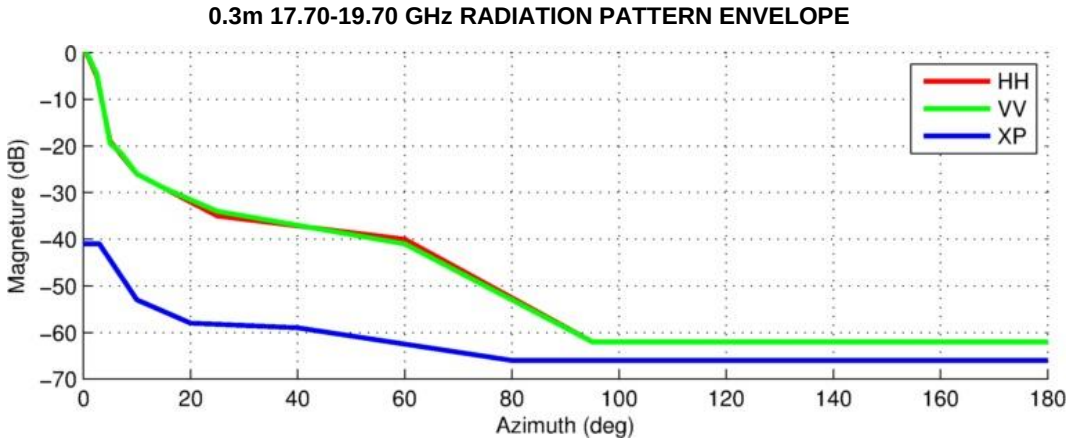

Radiation Pattern Envelope

Co-polar and Xp-polar response are represented for both horizontal and vertical polarizations. The curves are identified as follows:

HH – Response of horizontally polarized port to a horizontally polarized signal.

VV – Response of vertically polarized port to a vertically polarized signal.

XP – HV/VH

HV – Response of horizontally polarized port to a vertically polarized signal.

VH – Response of vertically polarized port to a horizontally polarized signal.

Am-1-23-CR

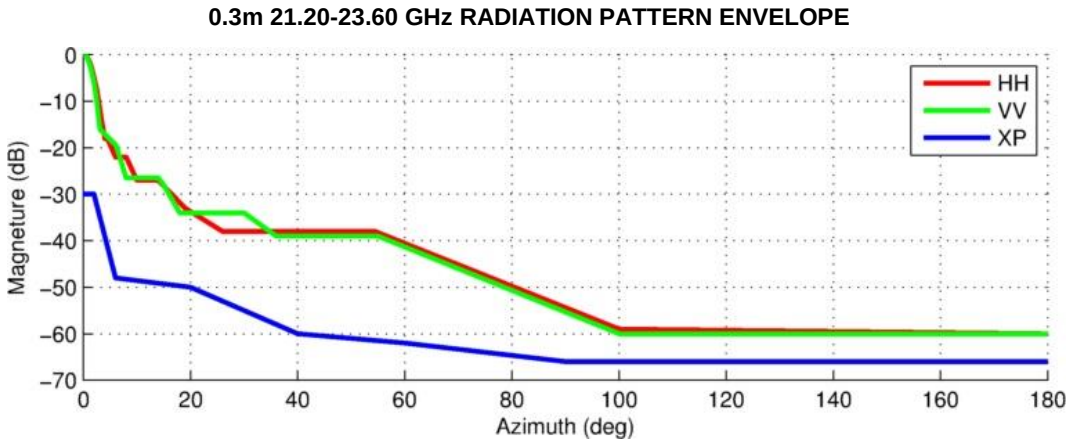

Radiation Pattern Envelope

Co-polar and Xp-polar response are represented for both horizontal and vertical polarizations. The curves are identified as follows:

HH – Response of horizontally polarized port to a horizontally polarized signal.

VV – Response of vertically polarized port to a vertically polarized signal.

XP – HV/VH

HV – Response of horizontally polarized port to a vertically polarized signal.

VH – Response of vertically polarized port to a horizontally polarized signal.

Am-1-26-CR

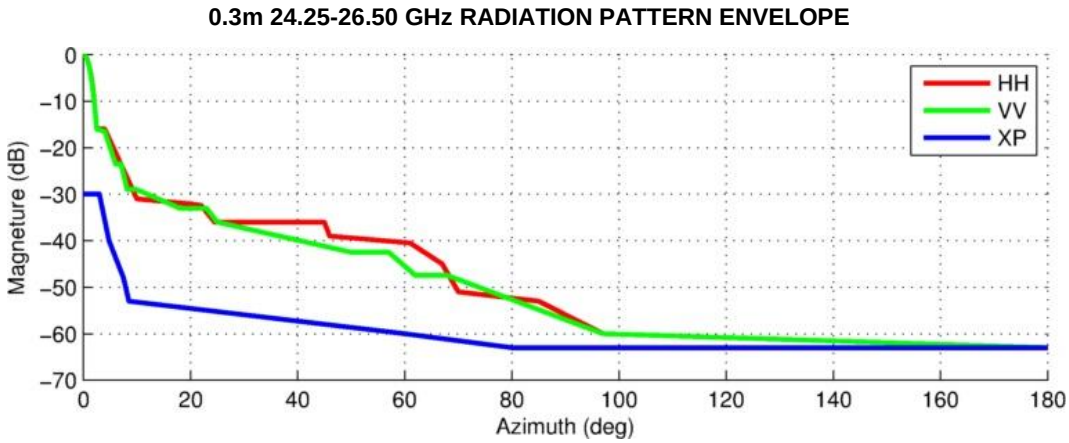

Radiation Pattern Envelope

Co-polar and Xp-polar response are represented for both horizontal and vertical polarizations. The curves are identified as follows:

HH – Response of horizontally polarized port to a horizontally polarized signal.

VV – Response of vertically polarized port to a vertically polarized signal.

XP – HV/VH

HV – Response of horizontally polarized port to a vertically polarized signal.

VH – Response of vertically polarized port to a horizontally polarized signal.

Am-1-28-CR

0.3m 27.50-29.60 GHz RADIATION PATTERN ENVELOPE

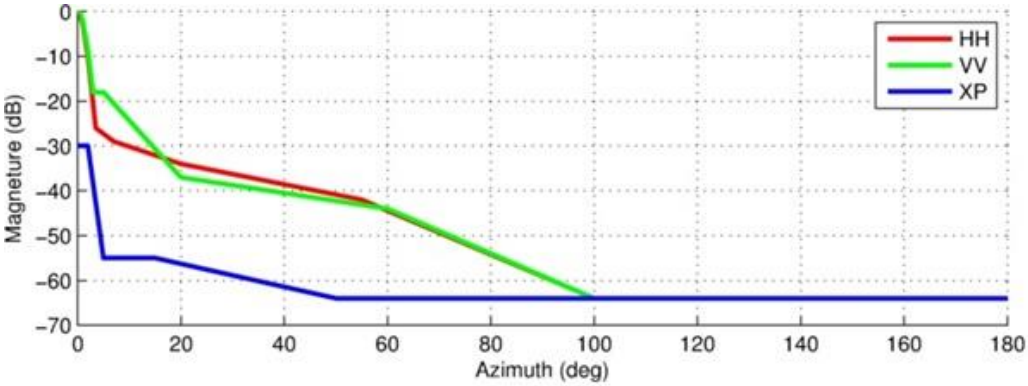

Radiation Pattern Envelope

Co-polar and Xp-polar response are represented for both horizontal and vertical polarizations. The curves are identified as follows:

HH – Response of horizontally polarized port to a horizontally polarized signal.

VV – Response of vertically polarized port to a vertically polarized signal.

XP – HV/VH

HV – Response of horizontally polarized port to a vertically polarized signal.

VH – Response of vertically polarized port to a horizontally polarized signal.

Am-1-32-CR

0.3m 31.00-33.40 GHz RADIATION PATTERN ENVELOPE

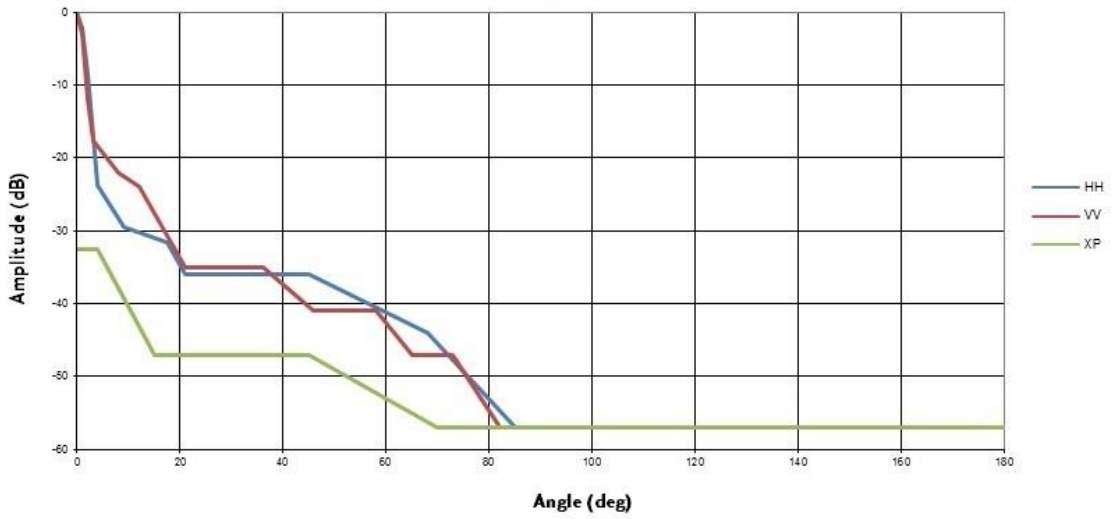

Radiation Pattern Envelope

Co-polar and Xp-polar response are represented for both horizontal and vertical polarizations. The curves are identified as follows:

HH – Response of horizontally polarized port to a horizontally polarized signal.

VV – Response of vertically polarized port to a vertically polarized signal.

XP – HV/VH

HV – Response of horizontally polarized port to a vertically polarized signal.

VH – Response of vertically polarized port to a horizontally polarized signal.

Am-1-38-CR

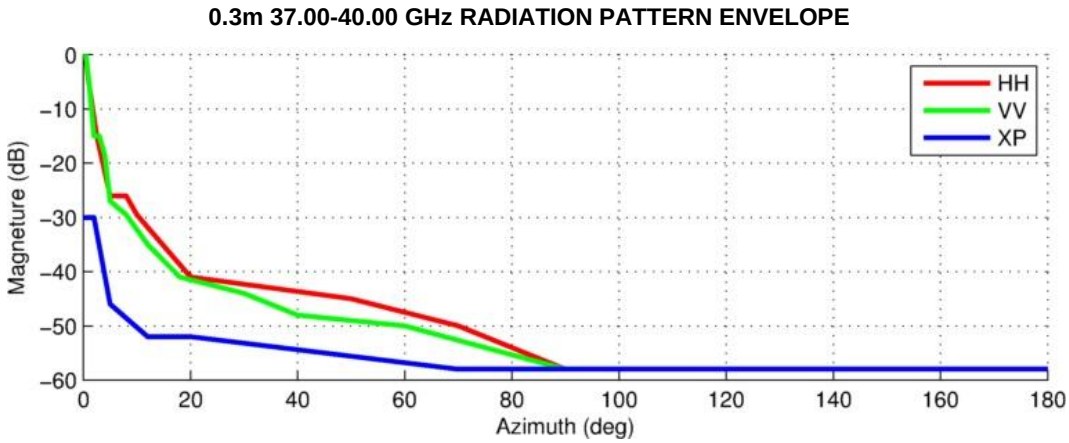

Radiation Pattern Envelope

Co-polar and Xp-polar response are represented for both horizontal and vertical polarizations. The curves are identified as follows:

HH – Response of horizontally polarized port to a horizontally polarized signal.

VV – Response of vertically polarized port to a vertically polarized signal.

XP – HV/VH

HV – Response of horizontally polarized port to a vertically polarized signal.

VH – Response of vertically polarized port to a horizontally polarized signal.

Am-1-42-CR

0.3m 40.50-43.50 GHz RADIATION PATTERN ENVELOPE

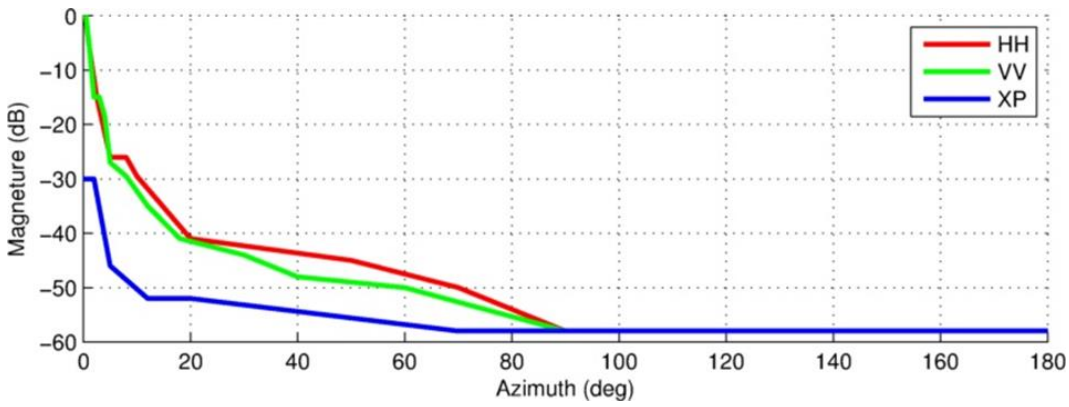

Radiation Pattern Envelope

Co-polar and Xp-polar response are represented for both horizontal and vertical polarizations. The curves are identified as follows:

HH – Response of horizontally polarized port to a horizontally polarized signal.

VV – Response of vertically polarized port to a vertically polarized signal.

XP – HV/VH

HV – Response of horizontally polarized port to a vertically polarized signal.

VH – Response of vertically polarized port to a horizontally polarized signal.

Am-1-80-CR
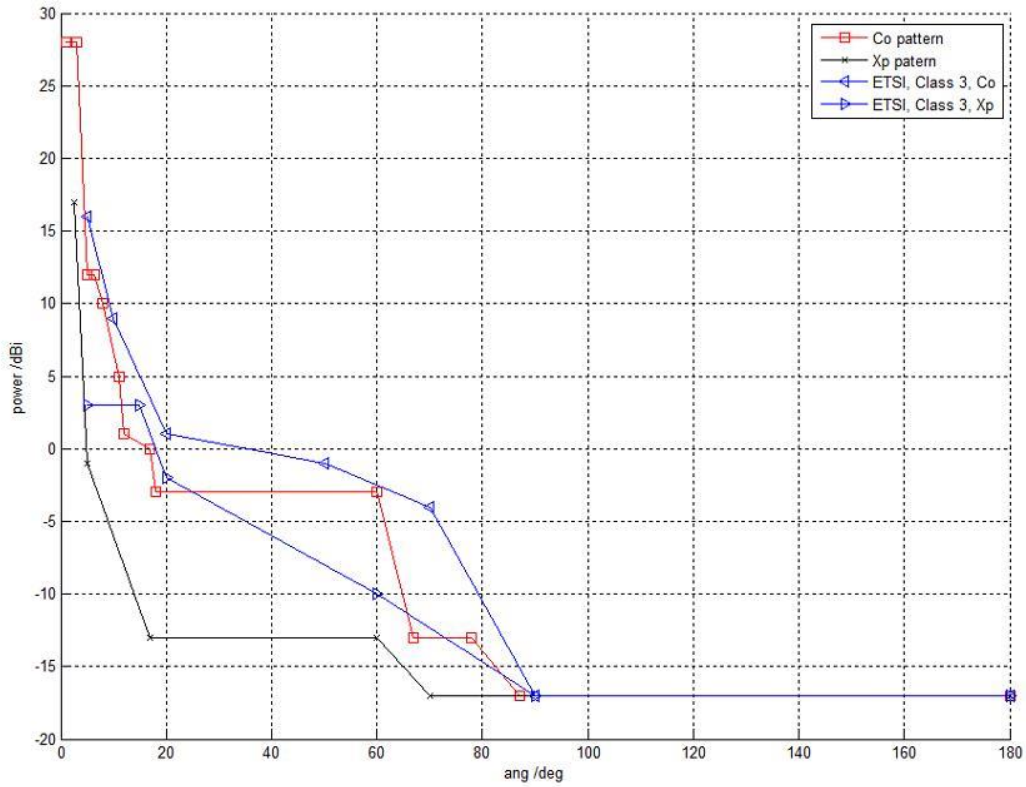
0.3m 71.00-86.00 GHz RADIATION PATTERN ENVELOPE