0.6m(2ft) Low Profile Antennas Microwave Antenna Specifications

General Specifications

Nominal diameter	0.6m (2ft)
Polarization	Single, Vertical or Horizontal
Radio interface	Direct Mount for RFU-C type ODU
Antenna color	Gray (Pantone 1C)
Radome color	Gray (Pantone 1C)
Radome type	Hard cover
Packing type	Carton
Gross weight, kg	18 ±2
Packed dimensions, mm	L x W x H : 750 x 750 x 440
Packing Volume, m³	0.248

Electrical Specifications

Antenna Marketing Model	**Am-2-7_8-CR**	**Am-2-11W-CR**	**Am-2-13-CR**	**Am-2-15-CR**	**Am-2-18-CR**
PN	**AN-3320-1**	**AN-3310-1**	**AN-3311-1**	**AN-3312-1**	**AN-3313-1**
Frequency Band (GHz)	7.125-8.500	10.000 - 11.700	12.750 - 13.250	14.400 - 15.350	17.700 - 19.700
Waveguide Interface	UBR84	UBR100	UBR120	UBR140	UBR220
Gain (dBi) Low	30.4	33.4	35.5	36.5	38.3
Gain (dBi) Mid	31.2	34.1	35.6	36.8	38.8
Gain (dBi) High	32.0	34.7	35.8	37.1	39.3
3 dB BW (°)	4.5	3.2	2.7	2.4	1.9
VSWR	1.30	1.30	1.30	1.30	1.30
F/B Ratio (dB)	57	60	61	64	67
XPD（dB）	30	30	30	30	30
ETSI Compliance	R1, C3	R1, C3	R1, C3	R2, C3	R2, C3
RPE Number	BL10573	BL10578	BL10591	BL10614	BL10592

Copyright © 2014 by Ceragon Networks Ltd. All rights reserved.

Antenna Marketing Model	**Am-2-23-CR**	**Am-2-26-CR**	**Am-2-28-CR**	**Am-2-32-CR**	**Am-2-38-CR**	**Am-2-42-CR**
PN	**AN-3314-1**	**AN-3315-1**	**AN-3316-1**	**AN-3317-1**	**AN-3318-1**	**AN-3319-0**
Frequency Band (GHz)	21.200 -23.600	24.000 - 26.500	27.500 - 29.500	31.800 - 33.400	37.000 -40.000	40.500 - 43.500
Waveguide	UBR220	UBR220	UBR320	UBR320	UBR320	UG383/U
Gain (dBi) Low	39.9	41.1	42.2	43.4	44.7	45.7
Gain (dBi) Mid	40.4	41.5	42.5	43.6	45.1	46.0
Gain (dBi) High	40.8	41.8	42.8	43.8	45.4	46.3
3 dB BW (°)	1.6	1.4	1.2	1.1	0.9	0.8
VSWR	1.30	1.30	1.30	1.30	1.30	1.30
F/B Ratio (dB)	64	67	68	61	63	65
XPD（dB）	30	30	30	30	30	30
ETSI Compliance	R3, C3	R4, C3	R4, C3	R5, C3B	R5, C3B	R5, C3B
RPE Number	BL10593	BL10594	BL10595	BL10596	BL10597	BL10612

Mechanical Specifications

Wind Velocity Operational, km/h	200
Wind Velocity Survival Rating, km/h	250
Ice Load, mm	25
Coarse Azimuth, Adjustment, Degrees	360
Fine Azimuth Adjustment, Degrees	±15
Coarse Elevation, Degree	±10
Fine Elevation Adjustment, Degrees	±15
Mounting Pipe Diameter, mm	51 to 114
Net weight, kg	11±1
Feed horn, OperationalPressure, KPa	50
Operational Temperature, °C	-45 to +60
Storage Temperature, °C	-55 to +70
Adjustment Struts	None
Fixed Support Struts	None
Humidity	100%
Rain Intensity, mm/min	15
Solar Radiation, W/m2	1120
Electrical properties	ETSI EN 302 217-4-2
Vibration	ETSI 300 019-2-4 V2.2.2 (2003-04) T4.1E.
RoHS 2002/95/EC	Compliant

Outline Dimensions

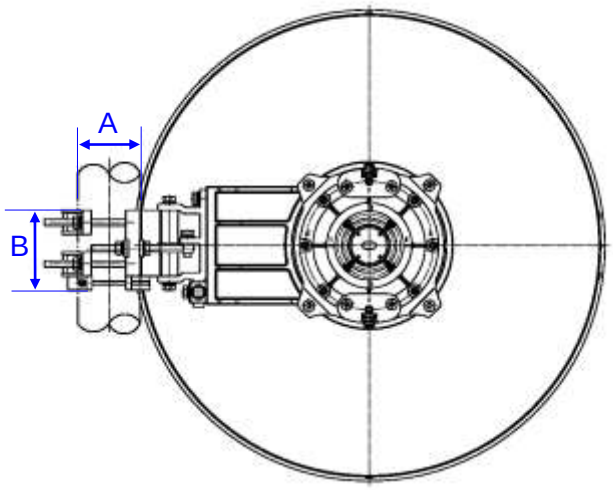

Antenna Dimensions, mm	
A	51 to 114
B	154
C	680
D	396
E	235

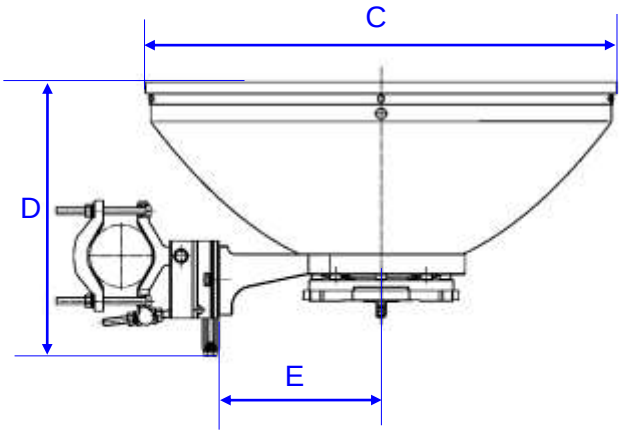

Wind Forces

The axial, side and twisting moment forces stated are maximum loads applied to the tower by the antenna at a survival wind speed of 250 km/h (70 m/s). They are, in every case, the result of wind from the most critical direction for each parameter. The individual maximums may not occur simultaneously. All forces are referenced to the antenna mounting pipe.

Axial Force (F_A), N	1370
Side Force (F_S), N	670
Twisting Moment (M_T), N•m	530
Angle α for M_T Max, Degree	-10

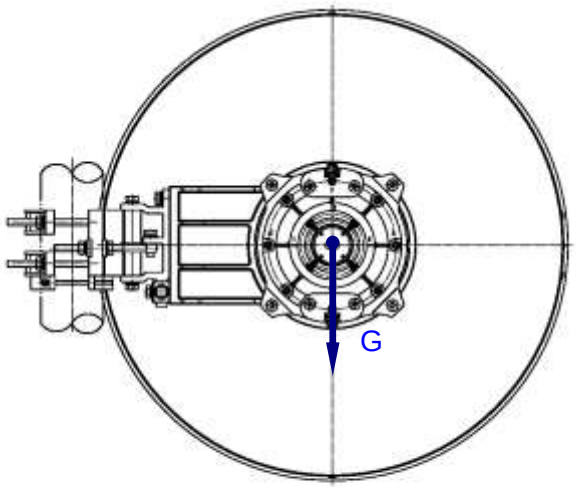

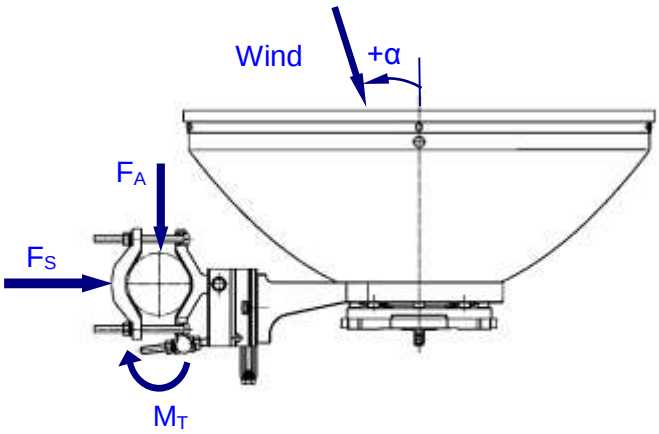

Radiation Pattern Envelope

Co-polar and X-polar response are represented for both horizontal and vertical polarizations. The curves are identified as follows:

HH – Response of horizontally polarized port to a horizontally polarized signal.

HV – Response of horizontally polarized port to a vertically polarized signal.

VV – Response of vertically polarized port to a vertically polarized signal.

HV – Response of vertically polarized port to a horizontally polarized signal.

Am-2-7_8-CR

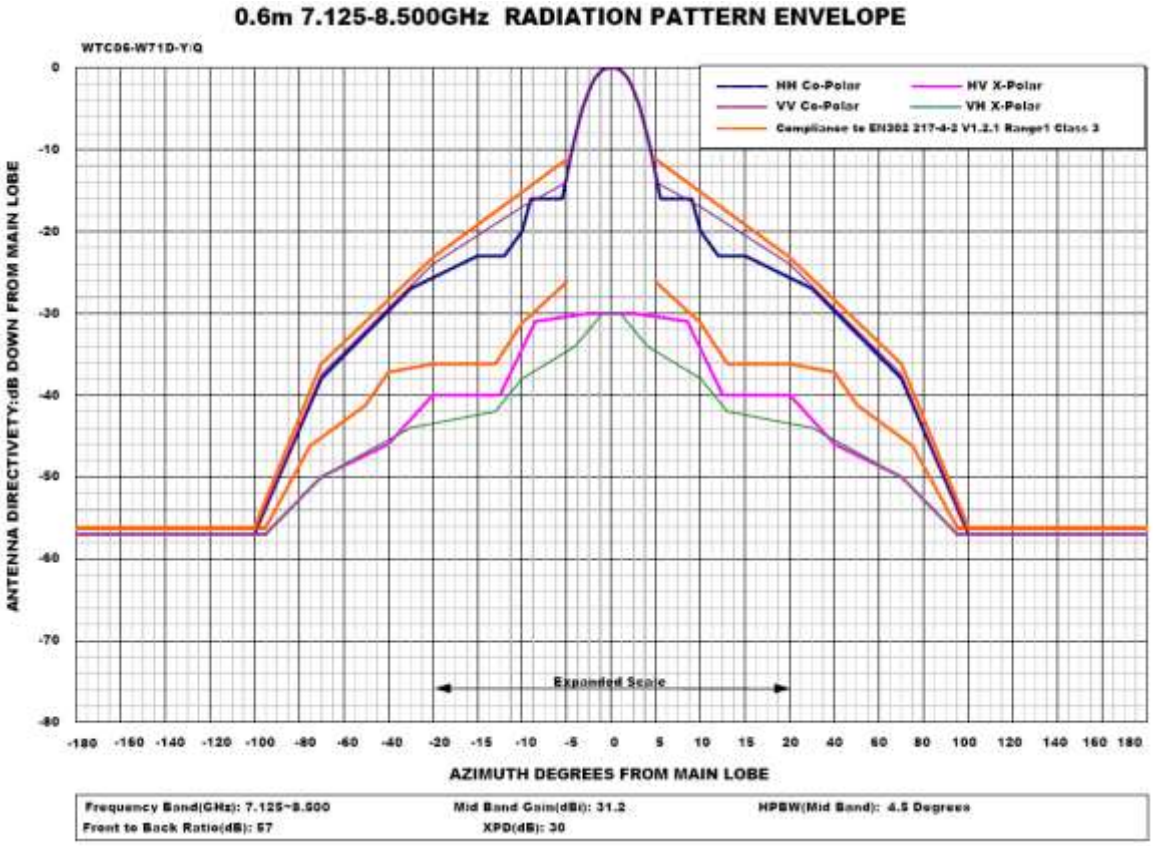

Radiation Pattern Envelope

Co-polar and X-polar response are represented for both horizontal and vertical polarizations. The curves are identified as follows:

HH – Response of horizontally polarized port to a horizontally polarized signal.

HV – Response of horizontally polarized port to a vertically polarized signal.

VV – Response of vertically polarized port to a vertically polarized signal.

VH – Response of vertically polarized port to a horizontally polarized signal.

Am-2-11W-CR

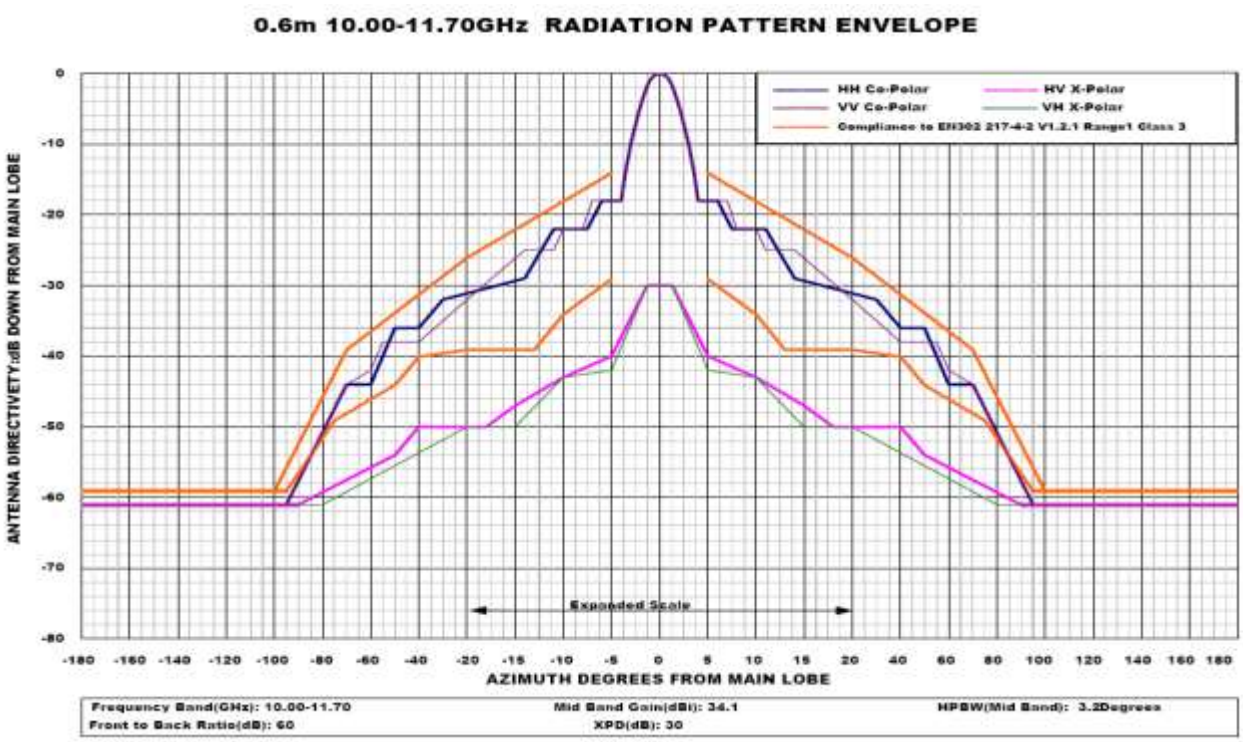

Radiation Pattern Envelope

Co-polar and X-polar response are represented for both horizontal and vertical polarizations. The curves are identified as follows:

HH – Response of horizontally polarized port to a horizontally polarized signal.

HV – Response of horizontally polarized port to a vertically polarized signal.

VV – Response of vertically polarized port to a vertically polarized signal.

VH – Response of vertically polarized port to a horizontally polarized signal.

Am-2-13-CR

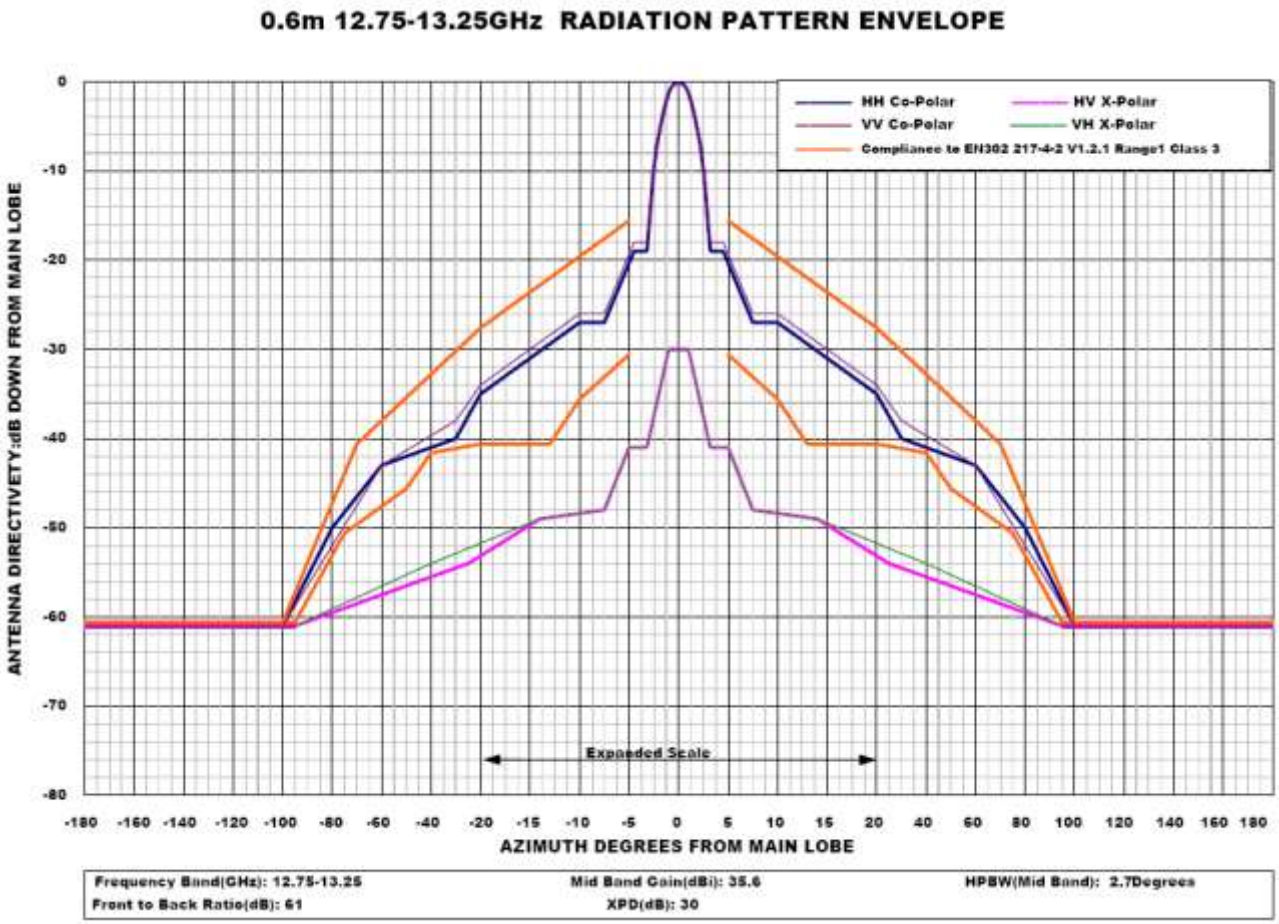

Radiation Pattern Envelope

Co-polar and X-polar response are represented for both horizontal and vertical polarizations. The curves are identified as follows:

HH – Response of horizontally polarized port to a horizontally polarized signal.

HV – Response of horizontally polarized port to a vertically polarized signal.

VV – Response of vertically polarized port to a vertically polarized signal.

VH – Response of vertically polarized port to a horizontally polarized signal.

Am-2-15-CR

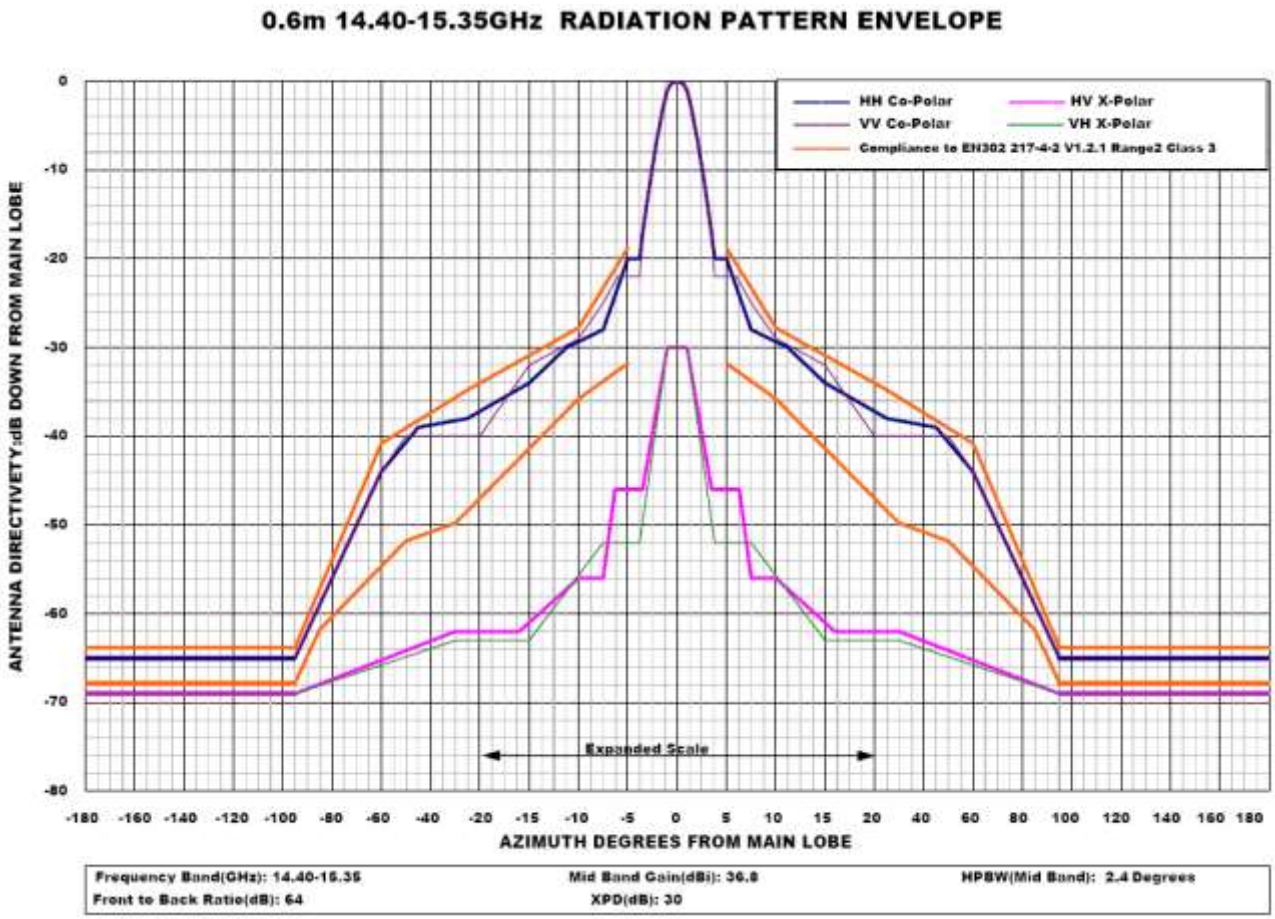

Radiation Pattern Envelope

Co-polar and X-polar response are represented for both horizontal and vertical polarizations. The curves are identified as follows:

HH – Response of horizontally polarized port to a horizontally polarized signal.

HV – Response of horizontally polarized port to a vertically polarized signal.

VV – Response of vertically polarized port to a vertically polarized signal.

VH – Response of vertically polarized port to a horizontally polarized signal.

Am-2-18-CR

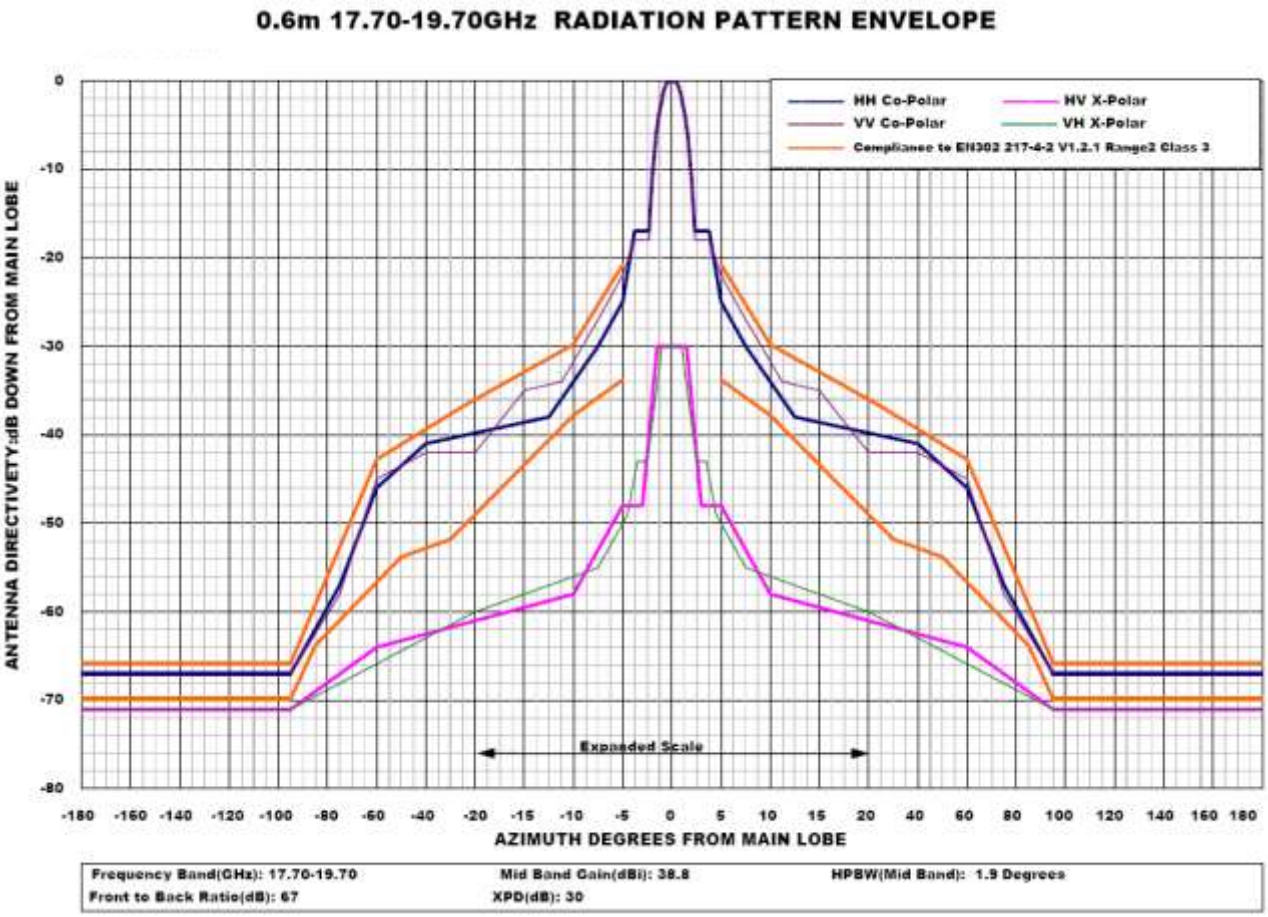

Radiation Pattern Envelope

Co-polar and X-polar response are represented for both horizontal and vertical polarizations. The curves are identified as follows:

HH – Response of horizontally polarized port to a horizontally polarized signal.

HV – Response of horizontally polarized port to a vertically polarized signal.

VV – Response of vertically polarized port to a vertically polarized signal.

VH – Response of vertically polarized port to a horizontally polarized signal.

Am-2-23-CR

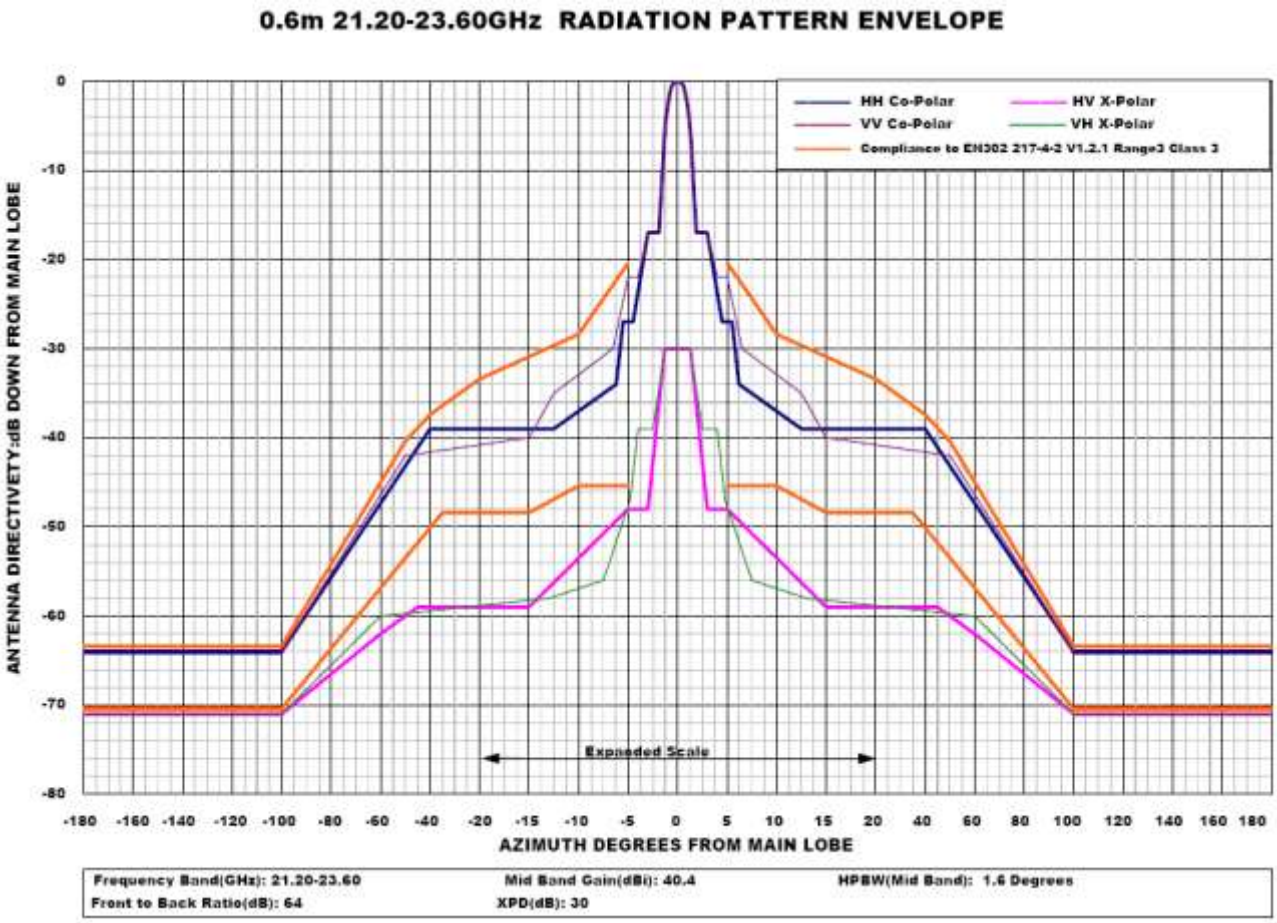

Radiation Pattern Envelope

Co-polar and X-polar response are represented for both horizontal and vertical polarizations. The curves are identified as follows:

HH – Response of horizontally polarized port to a horizontally polarized signal.

HV – Response of horizontally polarized port to a vertically polarized signal.

VV – Response of vertically polarized port to a vertically polarized signal.

VH – Response of vertically polarized port to a horizontally polarized signal.

Am-2-26-CR

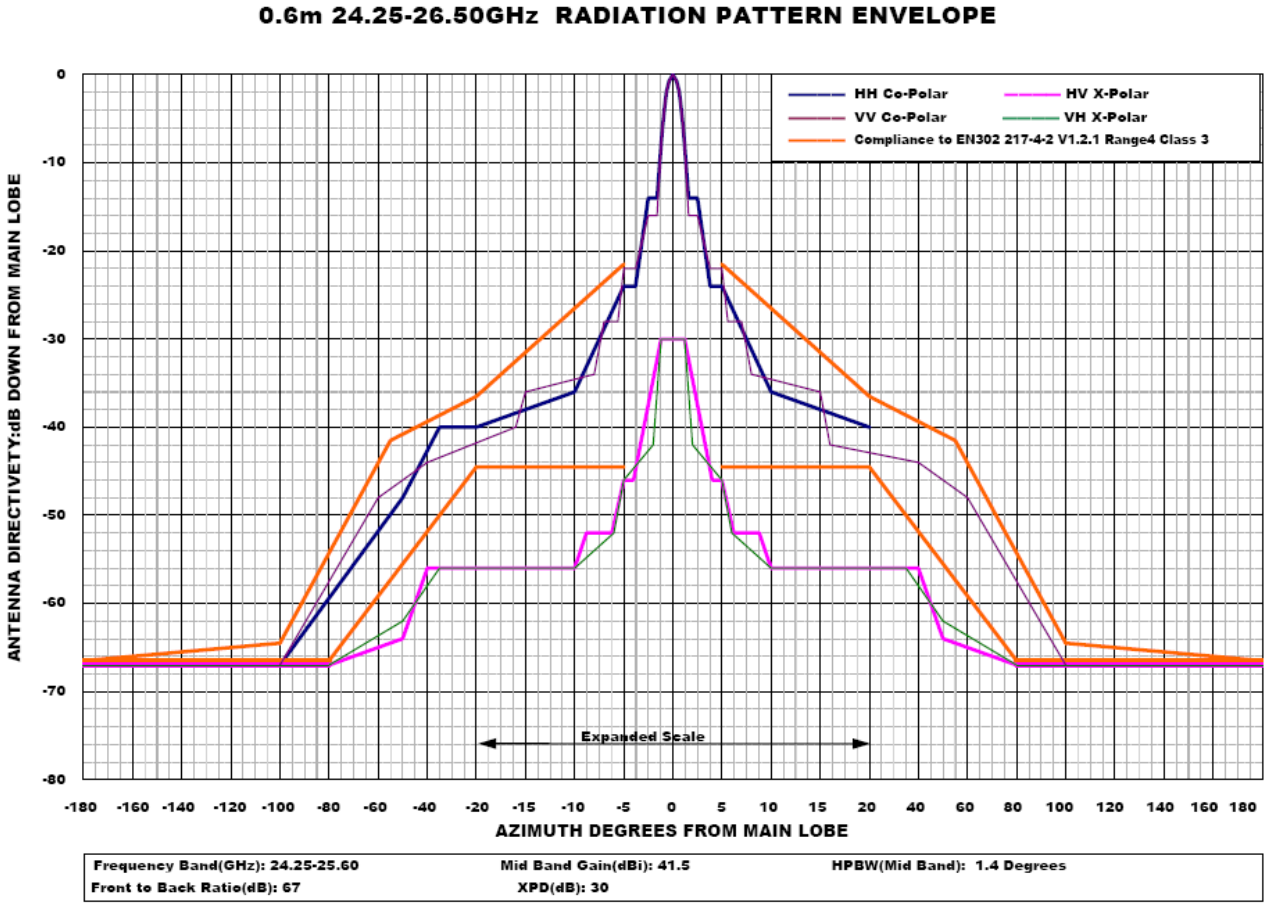

Radiation Pattern Envelope

Co-polar and X-polar response are represented for both horizontal and vertical polarizations. The curves are identified as follows:

HH – Response of horizontally polarized port to a horizontally polarized signal.

HV – Response of horizontally polarized port to a vertically polarized signal.

VV – Response of vertically polarized port to a vertically polarized signal.

VH – Response of vertically polarized port to a horizontally polarized signal.

Am-2-28-CR

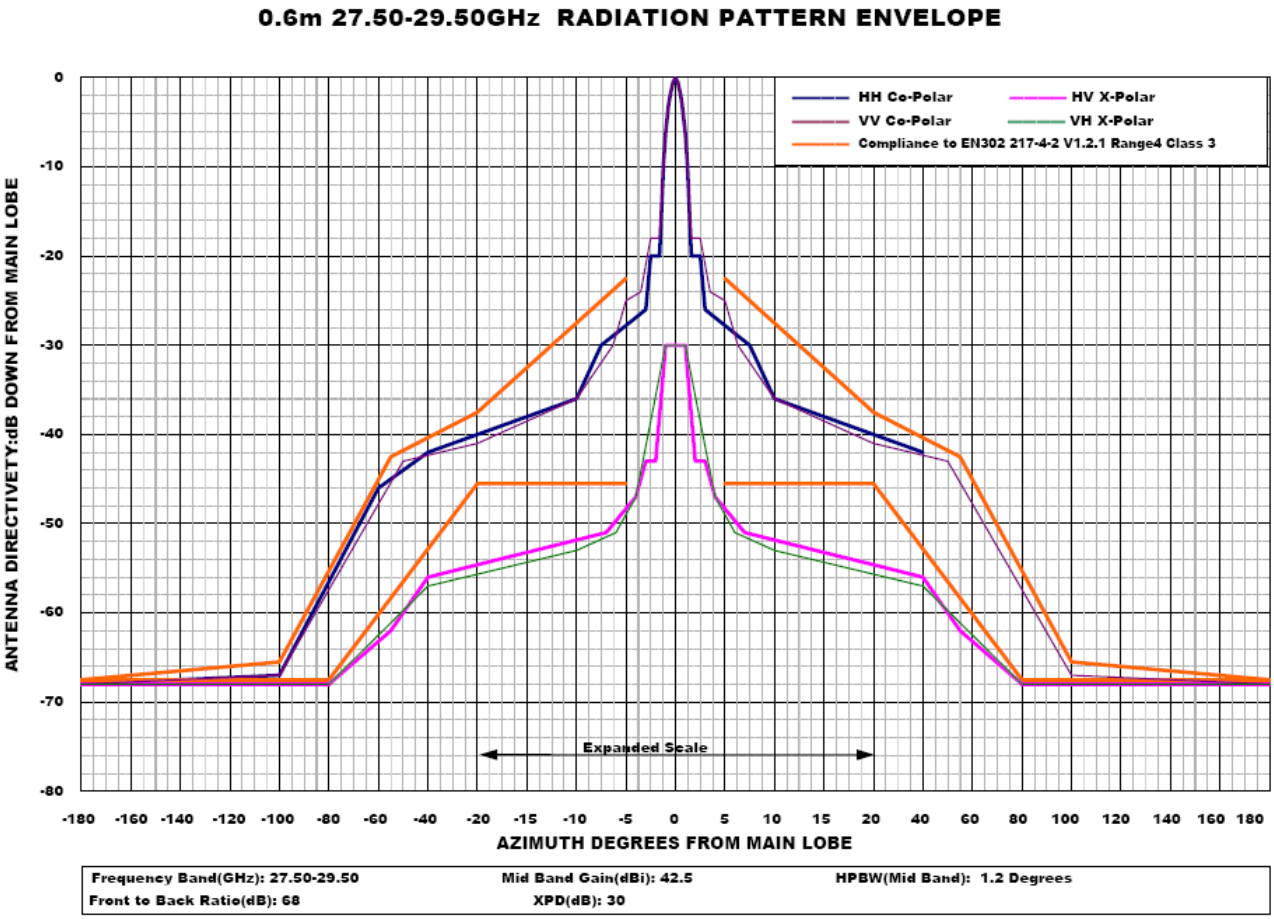

Radiation Pattern Envelope

Co-polar and X-polar response are represented for both horizontal and vertical polarizations. The curves are identified as follows:

HH – Response of horizontally polarized port to a horizontally polarized signal.

HV – Response of horizontally polarized port to a vertically polarized signal.

VV – Response of vertically polarized port to a vertically polarized signal.

VH – Response of vertically polarized port to a horizontally polarized signal.

Am-2-32-CR

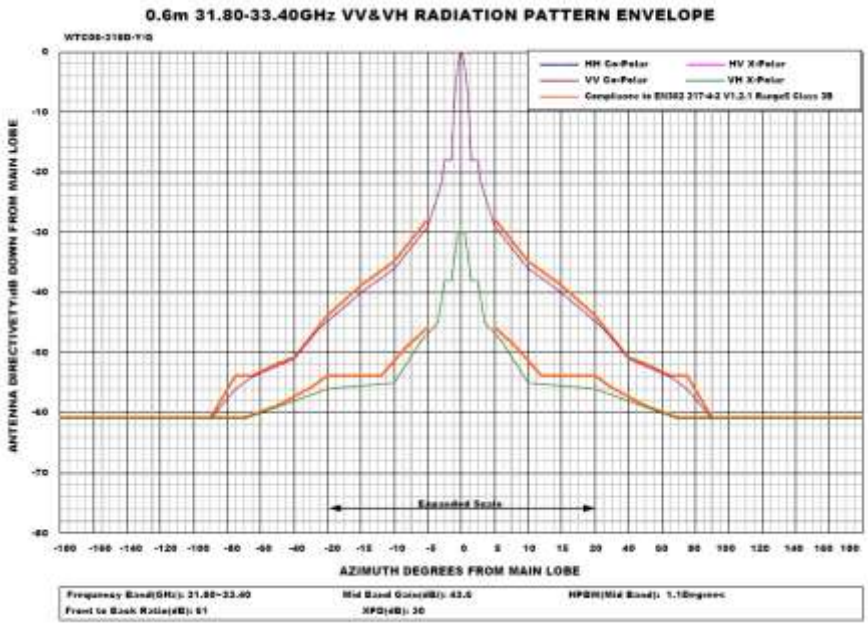

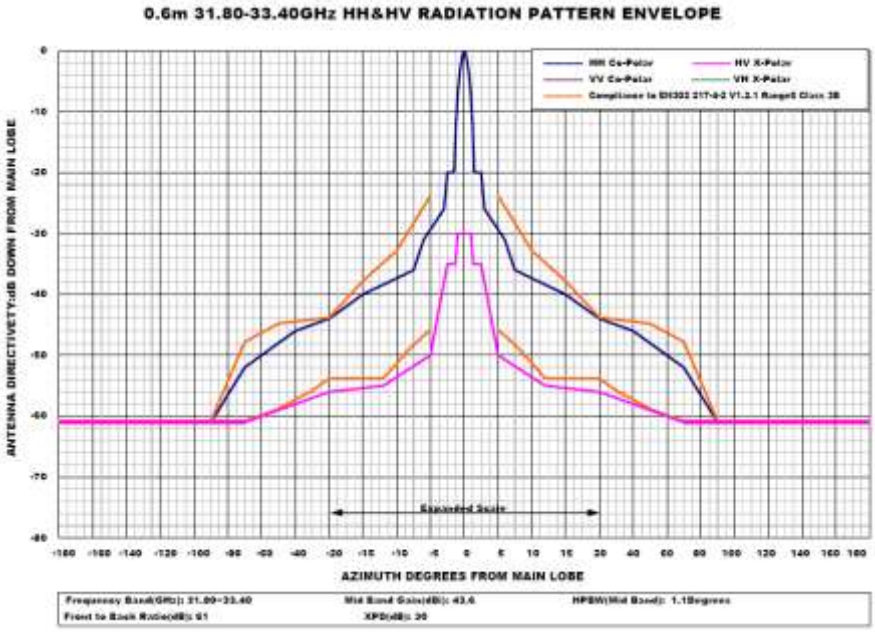

Radiation Pattern Envelope

Co-polar and X-polar response are represented for both horizontal and vertical polarizations. The curves are identified as follows:

HH – Response of horizontally polarized port to a horizontally polarized signal.

HV – Response of horizontally polarized port to a vertically polarized signal.

VV – Response of vertically polarized port to a vertically polarized signal.

VH – Response of vertically polarized port to a horizontally polarized signal.

Am-2-38-CR

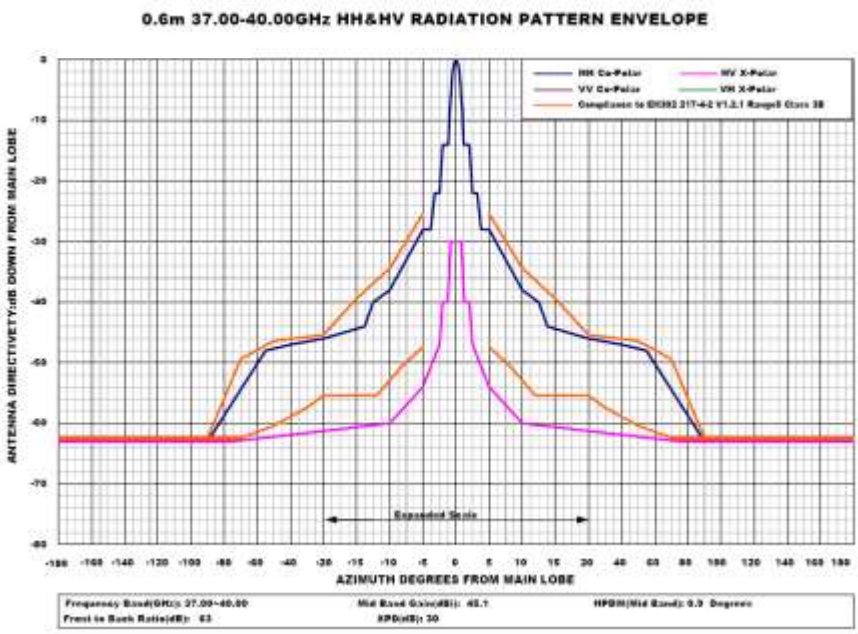

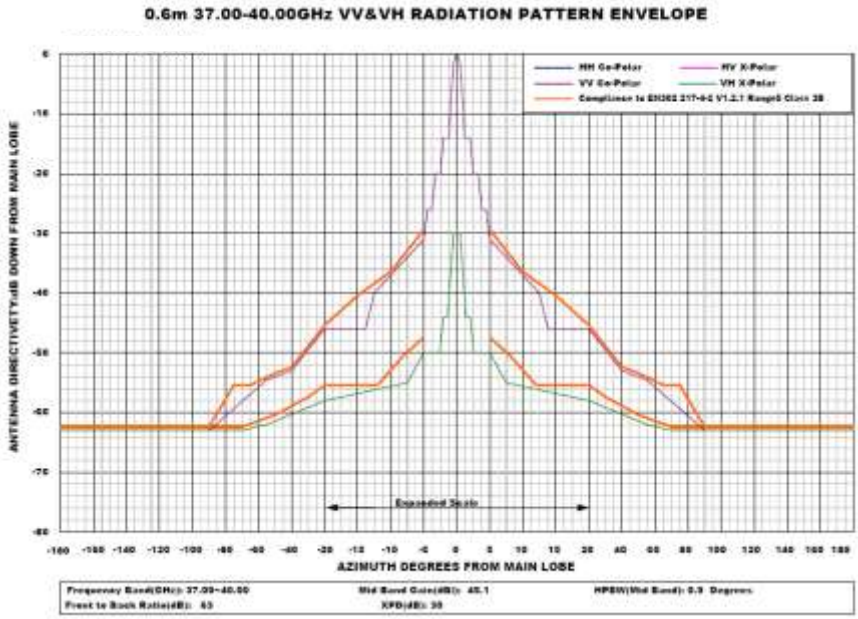

Radiation Pattern Envelope

Co-polar and X-polar response are represented for both horizontal and vertical polarizations. The curves are identified as follows:

HH – Response of horizontally polarized port to a horizontally polarized signal.

HV – Response of horizontally polarized port to a vertically polarized signal.

VV – Response of vertically polarized port to a vertically polarized signal.

VH – Response of vertically polarized port to a horizontally polarized signal.
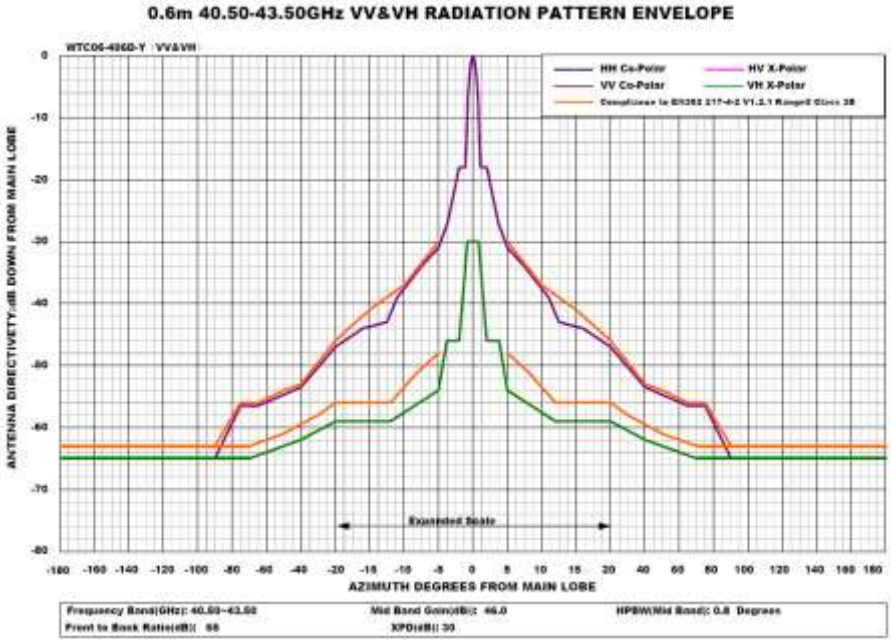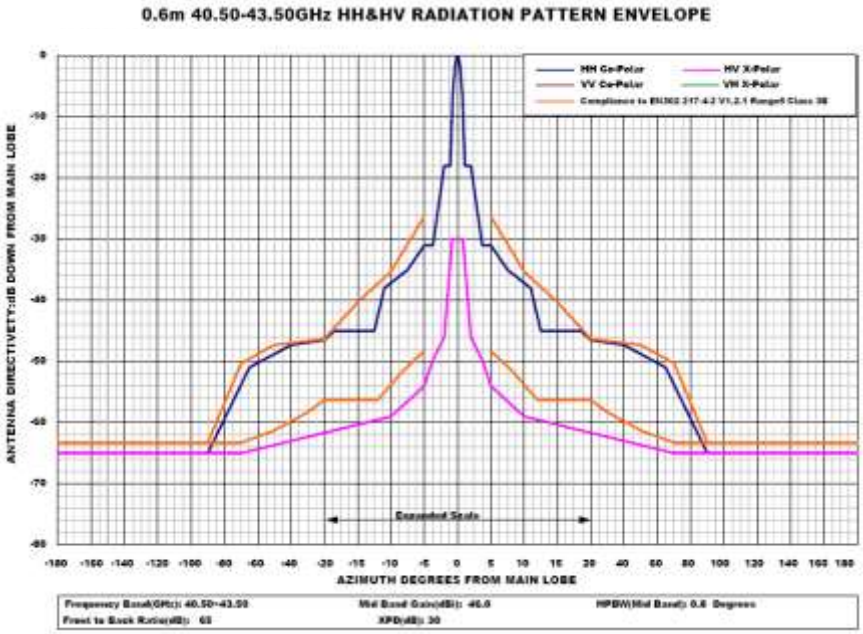
Am-2-42-CR