Installation Guide

FibeAir® IP-20C

February 2018

Part ID: BM-0266-0 | Doc ID: DOC-00036522 Rev F.10

© Copyright 2018 by Ceragon Networks Ltd. All rights reserved.

Notice

This document contains information that is proprietary to Ceragon Networks Ltd. No part of this publication may be reproduced, modified, or distributed without prior written authorization of Ceragon Networks Ltd. This document is provided as is, without warranty of any kind.

Trademarks

Ceragon Networks®, FibeAir® and CeraView® are trademarks of Ceragon Networks Ltd., registered in the United States and other countries.

Ceragon® is a trademark of Ceragon Networks Ltd., registered in various countries.

CeraMap™, PolyView™, EncryptAir™, ConfigAir™, CeraMon™, EtherAir™, CeraBuild™, CeraWeb™, and QuickAir™, are trademarks of Ceragon Networks Ltd.

Other names mentioned in this publication are owned by their respective holders.

Statement of Conditions

The information contained in this document is subject to change without notice. Ceragon Networks Ltd. shall not be liable for errors contained herein or for incidental or consequential damage in connection with the furnishing, performance, or use of this document or equipment supplied with it.

Open Source Statement

The Product may use open source software, among them O/S software released under the GPL or GPL alike license ("Open Source License"). Inasmuch that such software is being used, it is released under the Open Source License, accordingly. The complete list of the software being used in this product including their respective license and the aforementioned public available changes is accessible at:

Network element site: ftp://ne-open-source.license-system.com

NMS site: ftp://nms-open-source.license-system.com/

Information to User

Any changes or modifications of equipment not expressly approved by the manufacturer could void the user's authority to operate the equipment and the warranty for such equipment.

Intended Use/Limitation

Fixed point-to-point radio links for private networks.

Authorized to Use

Only entities with individual authorization from the National Regulator to operate the mentioned radio equipment.

The equipment can be used in the following EU countries:

Austria (AT) - Belgium (BE) - Bulgaria (BG) - Switzerland/Liechtenstein (CH) - Cyprus (CY) - Czech Republic (CZ) - Germany (DE) – Denmark (DK) - Estonia (EE) - Finland (FI) - France (FR) -Greece (GR) - Hungary (HU) - Ireland (IE) – Iceland (IS) – Italy (IT) – Lithuania (LT) - Luxembourg (LU) – Latvia (LV) - Malta (MT) - Netherlands (NL) - Norway (NO) - Portugal (PT) - Romania (RO) - Sweden (SE) - Slovenia (SI) - Slovak Republic (SK) – United Kingdom (UK) – Spain (SP) – Poland (PL)

Table of Contents

1. Before You Start 8

1.1 Important Notes 8

1.2 Safety Precautions & Declared Material 9
1.2.1 General Equipment Precautions 9
1.2.2 Précautions générales relatives à l'équipement 10
1.2.3 Allgemeine Vorsichtsmaßnahmen für die Anlage 10

1.3 Pre-Installation Instructions 10
1.3.1 Packing 10
1.3.2 Transportation and Storage 10
1.3.3 Unpacking 11
1.3.4 Inspection 11

2. Product Hardware Description 12

2.1 IP-20C Hardware Overview 12
2.1.1 IP-20C Interfaces 13

2.2 MultiCore Mediation Devices (MCMD) 14

2.3 PoE Injector 15
2.3.1 PoE Injector Interfaces 15

2.4 System Components 17

2.5 Adaptors and Installation Kits 18

2.6 Antenna Connection 19
2.6.1 Antenna Specifications for 1 ft Antennas 19
2.6.2 Antenna Specifications for 2 ft Antennas 21

2.7 Power Specifications 23
2.7.1 Electrical Requirements 23
2.7.2 Important Notes! 23

2.8 Environmental Specifications 23

3. Cable Installation and Grounding 24

3.1 Minimum and Maximum Cable Diameter 24

3.2 Cable Grounding 24
3.2.1 Grounding Procedure 24

3.3 Power Source 26

3.4 Surge Protection 26

3.5 Available Cable Options 27
3.5.1 Fiber Optic Cables - Single Mode 27
3.5.2 Fiber Optic Cables - Multi Mode 27
3.5.3 DC Cable and Connector 28
3.5.4 Ethernet Cable and Specifications 28
3.5.5 Outdoor Ethernet Cable Specifications 29
3.5.6 Outdoor DC Cable Specifications 30

3.6 Securing the Cables 31

Ceragon Proprietary and Confidential

3.7 Special Instructions for use of Glands 32
3.7.1 General Installation Procedure 33
3.8 Connecting an Optical Fiber Cable and SFP 38
3.9 Connecting a DC Power Cable 42
3.10 Connecting the Ethernet Cable 45
3.10.1 Preparing the Ethernet Cable and Plug-in Field 45
3.10.2 Preparing the Ethernet Cable Already Assembled 47
3.10.3 Connection of Ethernet Cable to IP-20C 48
4. PoE Injector Installation and Connection 50
4.1 PoE Injector Cable Connection 50
4.2 PoE Injector Grounding 51
4.3 PoE Injector Wall Mount Installation 51
4.4 PoE Injector Pole Mount Installation 53
4.5 PoE Injector 19” Rack Installation 54
4.6 PoE Injector ETSI Rack Installation 56
5. Generic Installation Procedures 58
5.1 General Notes Concerning All Installation Procedures 58
5.2 Torque Requirements 59
5.3 IP-20C DC Pole Mount Procedure 60
6. Installation Procedures per Configuration Type 61
6.1 MultiCore 2+0 Dual Polarization Direct Mount 61
6.2 MultiCore 2+0 Single Polarization Direct Mount 64
6.3 AFR 1+0 Hub Site 67
6.3.1 Procedure 68
7. Antenna Installation Instructions 71
7.1 Installation Instructions for 1 ft Antenna 71
7.2 Antenna Assembly Procedure 73
7.3 Antenna Installation Procedure 78
7.4 Antenna Alignment Procedure 80
7.4.1 Elevation Adjustment 80
7.4.2 Azimuth Adjustment 80
7.5 Installation Instructions for 2 ft Antenna 82
7.6 Antenna Assembly Procedure 85
7.7 Antenna Installation Procedure 92
7.8 Antenna Alignment Procedure 94
7.8.1 Elevation Adjustment 94
7.8.2 Azimuth Adjustment 94

Ceragon Proprietary and Confidential

List of Figures

Figure 1: IP-20C Rear View (Left) and Front View (Right) 12
Figure 2: Cable Gland Construction 12
Figure 3: IP-20C Interfaces 13
Figure 4: Splitter 14
Figure 5: OMT 14
Figure 6: PoE Injector 15
Figure 7: PoE Injector Ports 16
Figure 8: IP-20C 17
Figure 9: DC OMT 17
Figure 10: DC Splitter 17
Figure 11: PoE Injector 17
Figure 12: Cable Grounding 24
Figure 13: Cable Design 29
Figure 14: Tightening the Front Portion of the Gland 37
Figure 15: Tightening the Rear Portion of the Gland 37
Figure 16: Transparent Pressure Windows 58
Figure 17: Right Side Antenna Installation 74
Figure 18: Left Side Antenna Installation 74
Figure 19: Clamp orientation for pipes Ø50-66mm (32Nm) 79
Figure 20: Clamp orientation for pipes Ø66-120mm (24Nm) 79
Figure 21: Right Side Antenna Installation 86
Figure 22: Left Side Antenna Installation 86
Figure 23: Clamp orientation for pipes Ø50-66mm (32Nm) 93
Figure 24: Clamp orientation for pipes Ø66-120mm (24Nm) 93

Ceragon Proprietary and Confidential

List of Tables

Table 1: MCMD Comparison 14
Table 2: PoE Injector 18
Table 3: Fiber Optic Cables - Single Mode 27
Table 4: Fiber Optic Cables - Multi Mode 27
Table 5: DC Cable and Connector 28
Table 6: Ethernet Cable and Specifications 28
Table 7: Ethernet Cable Color Code 29
Table 8: Outdoor Ethernet Cable Specifications – Electrical Requirements 29
Table 9: Outdoor Ethernet Cable Specifications – Mechanical/ Environmental Requirements 30
Table 10: Outdoor DC Cable Specifications – Electrical Requirements 30
Table 11: Outdoor DC Cable Specifications – Mechanical/ Environmental Requirements 30
Table 12: Cable Clamps 31
Table 13: Glands Kit 32
Table 14: Gland Caps 32

Ceragon Proprietary and Confidential

About This Guide

This guide describes the FibeAir IP-20C installation procedures and provides additional information concerning system parts and frequency bands.

What You Should Know

For the warranty to be honored, install the unit in accordance with the instructions in this manual.

Target Audience

This guide contains technical information about IP-20C installation, and is intended for use by qualified Ceragon technical personnel at all levels.

Ceragon Proprietary and Confidential

1. Before You Start

1.1 Important Notes

- For the warranty to be honored, install the unit in accordance with the instructions in this manual.
- Any changes or modifications of equipment not expressly approved by the manufacturer could void the user's authority to operate the equipment and the warranty for such equipment.
- IP-20C is intended for installation in a restricted access location.
- IP-20C must be installed and permanently connected to protective earth by qualified service personnel in accordance with applicable national electrical codes.
- This device complies with FCC Rules Part 15. Operation is subject to two conditions: (1) This device may not cause harmful interference, and (2) this device must accept any interference that may be received or that may cause undesired operation.
- This device complies with Industry Canada's RSS-310. Operation is subject to the condition that this device must not cause harmful interference and must accept any interference, including interference that may cause undesired operation of the device.
- Changes or modifications to this equipment not expressly approved by the party responsible for compliance (Ceragon Networks Ltd.) could void the user's authority to operate the equipment.
- **NOTE:** This equipment has been tested and found to comply with the limits for a Class B digital device, pursuant to part 15 of the FCC Rules. These limits are designed to provide reasonable protection against harmful interference in a residential installation. This equipment generates, uses and can radiate radio frequency energy and, if not installed and used in accordance with the instructions, may cause harmful interference to radio communications. However, there is no guarantee that interference will not occur in a particular installation. If this equipment does cause harmful interference to radio or television reception, which can be determined by turning the equipment off and on, the user is encouraged to try to correct the interference by one or more of the following measures:
    - Reorient or relocate the receiving antenna.
    - Increase the separation between the equipment and receiver.
    - Connect the equipment into an outlet on a circuit different from that to which the receiver is connected.
    - Consult the dealer or an experienced radio/TV technician for help.
- Cet appareil est conforme au CNR-310 d'Industrie Canada. Son exploitation est autorisée à condition que l'appareil ne produise pas de brouillage préjudiciable et qu'il accepte tout brouillage, même celui susceptible d'en compromettre le fonctionnement

Ceragon Proprietary and Confidential

1.2 Safety Precautions & Declared Material

1.2.1 General Equipment Precautions

To avoid malfunctioning or personnel injuries, equipment or accessories/kits/plug-in unit installation, requires qualified and trained personnel. Changes or modifications not expressly approved by Ceragon Networks could void the user's authority to operate the equipment.

Where special cables, shields, adapters and grounding kits are supplied or described in this manual, these items must be used, to comply with the FCC regulations.

Use of controls, adjustments, or performing procedures other than those specified herein, may result in hazardous radiation exposure.

When working with an IP-20C, note the following risk of electric shock and energy hazard:
Disconnecting one power supply disconnects only one power supply module. To isolate the unit completely, disconnect all power supplies.

Machine noise information order - 3. GPSGV, the highest sound pressure level amounts to 70 dB (A) or less, in accordance with ISO EN 7779.

Static electricity may cause body harm, as well as harm to electronic components inside the device. Anyone responsible for the installation or maintenance of the IP-20C must use an ESD Wrist Strap. ESD protection measures must be observed when touching the unit. To prevent damage, before touching components inside the device, all electrostatic must be discharged from both personnel and tools.

In Norway and Sweden:

Equipment connected to the protective earthing of the building installation through the mains connection or through other equipment with a connection to protective earthing – and to a cable distribution system using coaxial cable, may in some circumstances create a fire hazard. Connection to a cable distribution system has therefore to be provided through a device providing electrical isolation below a certain frequency range (galvanic isolator, see EN 60728-11).

Utstyr som er koplet til beskyttelsesjord via nettplugg og/eller via annet jordtilkoplet utstyr – og er tilkoplet et kabel-TV nett, kan forårsake brannfare. For å unngå dette skal det ved tilkopling av utstyret til kabel-TV nettet installeres en galvanisk isolator mellom utstyret og kabel- TV nettet.

Utrustning som är kopplad till skyddsjord via jordat vägguttag och/eller via annan utrustning och samtidigt är kopplad till kabel-TV nät kan i vissa fall medföra risk för brand. För att undvika detta skall vid anslutning av utrustningen till kabel-TV nät galvanisk isolator finnas mellan utrustningen och kabel-TV nätet.

Ceragon Proprietary and Confidential

1.2.2 Précautions générales relatives à l'équipement

L'utilisation de commandes ou de réglages ou l'exécution de procédures autres que celles spécifiées dans les présentes peut engendrer une exposition dangereuse aux rayonnements.

L'usage de IP-20C s'accompagne du risque suivant d'électrocution et de danger électrique : le débranchement d'une alimentation électrique ne déconnecte qu'un module d'alimentation électrique. Pour isoler complètement l'unité, il faut débrancher toutes les alimentations électriques.

Bruit de machine d'ordre - 3. GPSGV, le plus haut niveau de pression sonore s'élève à 70 dB (A) au maximum, dans le respect de la norme ISO EN 7779.

1.2.3 Allgemeine Vorsichtsmaßnahmen für die Anlage

Wenn andere Steuerelemente verwendet, Einstellungen vorgenommen oder Verfahren durchgeführt werden als die hier angegebenen, kann dies gefährliche Strahlung verursachen.

Beachten Sie beim Arbeiten mit IP-20C das folgende Stromschlag- und Gefahrenrisiko: Durch Abtrennen einer Stromquelle wird nur ein

Stromversorgungsmodul abgetrennt. Um die Einheit vollständig zu isolieren, trennen Sie alle Stromversorgungen ab.

Maschinenlärminformations-Verordnung - 3. GPSGV, der höchste Schalldruckpegel beträgt 70 dB(A) oder weniger gemäß EN ISO 7779.

1.3 Pre-Installation Instructions

1.3.1 Packing

The equipment should be packed and sealed in moisture absorbing bags.

1.3.2 Transportation and Storage

The equipment cases are prepared for shipment by air, truck, railway and sea, suitable for handling by forklift trucks and slings. The cargo must be kept dry during transportation, in accordance with ETS 300 019-1-2, Class 2.3. For sea-transport, deck-side shipment is not permitted. Carrier-owned cargo containers should be used.

It is recommended that the equipment be transported to the installation site in its original packing case.

If intermediate storage is required, the packed equipment must be stored in a dry and cool environment, and out of direct sunlight, in accordance with ETS 300 019-1-1, Class 1.2.

Ceragon Proprietary and Confidential

1.3.3 Unpacking

The equipment is packed in sealed plastic bags and moisture absorbing bags are inserted. Any separate sensitive product, i.e. printed boards, are packed in anti-static handling bags. The equipment is further packed in special designed cases.

Marking is done according to standard practice unless otherwise specified by customers. The following details should be marked:

- Customers address
- Contract No
- Site name (if known)
- Case No

1.3.4 Inspection

Check the packing lists and ensure that correct parts numbers quantities of goods have arrived. Inspect for any damage on the cases and equipment. Report any damage or discrepancy to a Ceragon representative, by e-mail or fax.

Ceragon Proprietary and Confidential

2. Product Hardware Description

2.1 IP-20C Hardware Overview

IP-20C features an all-outdoor dual-carrier architecture consisting of a single unit directly mounted on the antenna.

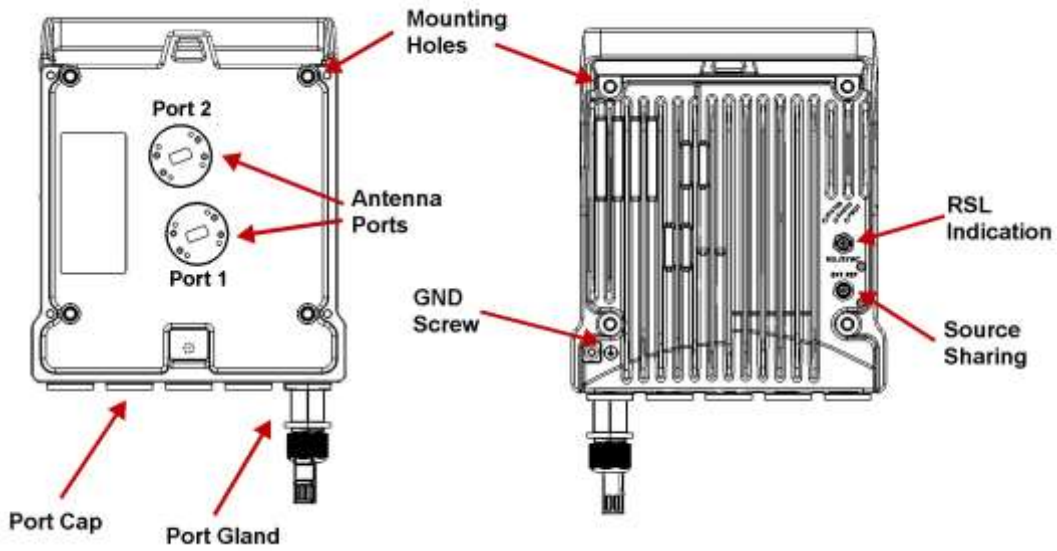

Figure 1: IP-20C Rear View (Left) and Front View (Right)

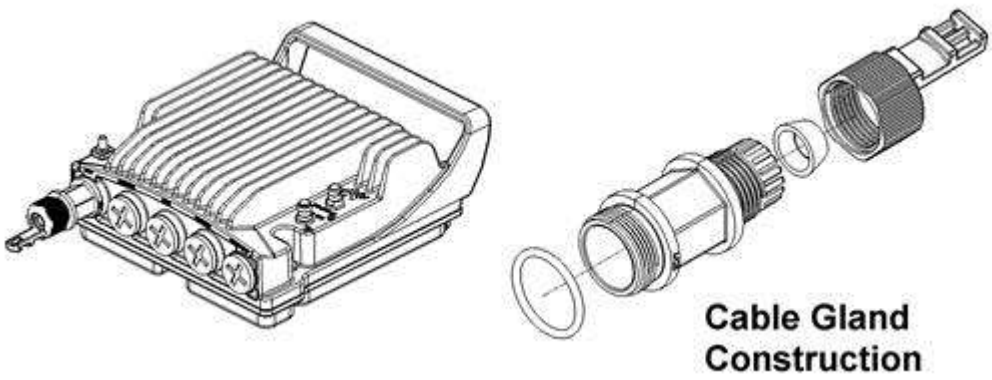

Figure 2: Cable Gland Construction

Ceragon Proprietary and Confidential

2.1.1 IP-20C Interfaces

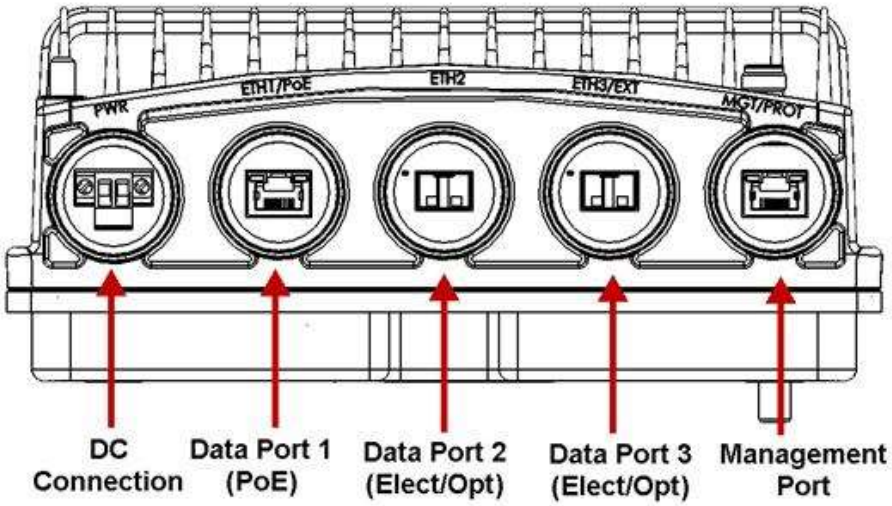

Figure 3: IP-20C Interfaces

- Data Port 1 for GbE traffic:
  - Electric: 10/100/1000Base-T. Supports PoE.
  - Optical: 1000Base-SX (or X-LX-ZX/XD)
- Data Port 2 for GbE traffic:
  - Electric: 10/100/1000Base-T
  - Optical: 1000Base-SX (or X-LX-ZX/XD)
- Data Port 3 for GbE traffic/expansion port:
  - Electric: 10/100/1000Base-T
  - Optical: 1000Base-SX (or X-LX-ZX/XD)
- Power interface (-48VDC)
- Management Port: 10/100Base-T
- 2 RF Interfaces: Standard interface per frequency band
- RSL interface: BNC connector
- Source sharing: TNC connector
- Grounding screw

Ceragon Proprietary and Confidential

2.2 MultiCore Mediation Devices (MCMD)

The MultiCore Mediation Devices (MCMD) are designed to offer a simple and compact solution for a direct mount installation of the dual-carrier IP-20C on a standard RFU-C antenna.

IP-20C is equipped with two antenna ports, which mandates the use of the following MCMDs for direct mount connections. The specific MCMDs depend on the configuration.

The following describes some of the available MCMDs. For a full list of components, refer to *System Components* on page 17.

Note: MCMDs are not grounded. In order to add grounding, the MCMD can be connected to the IP-20C using a Grounding Jumper.

Table 1: MCMD Comparison

MCMD type	Functionality
Splitter	Combines the two carriers using the same polarization
OMT	Combines the two carriers on alternate polarizations (H,V)

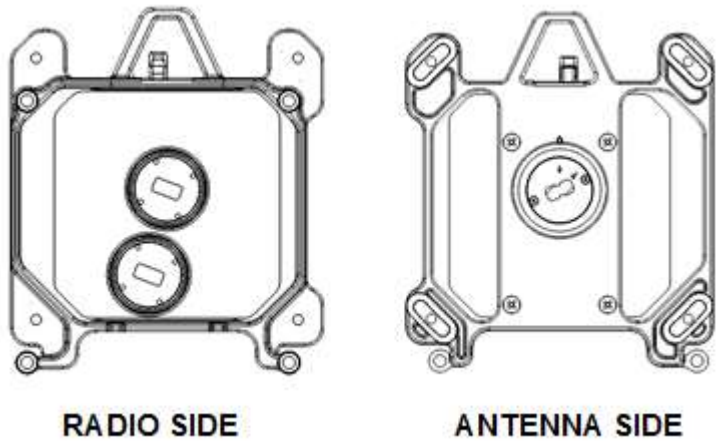

Figure 4: Splitter

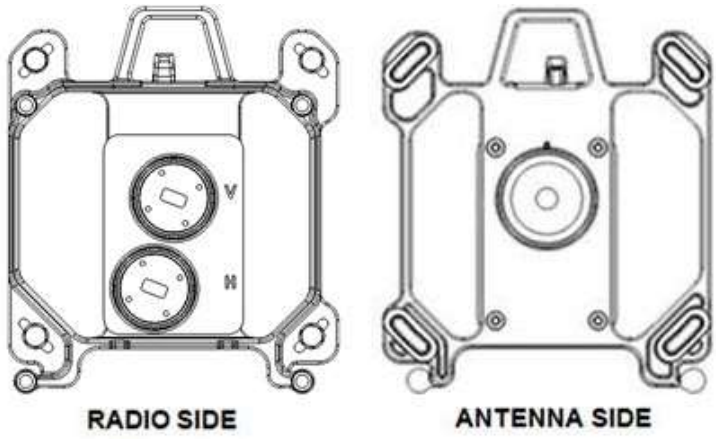

Figure 5: OMT

Ceragon Proprietary and Confidential

2.3 PoE Injector

The PoE injector is an outdoor unit which can be mounted on a wall, pole, or indoor rack.

Each PoE Injector kit includes the following items:

- PoE injector
- 2 DC power connectors

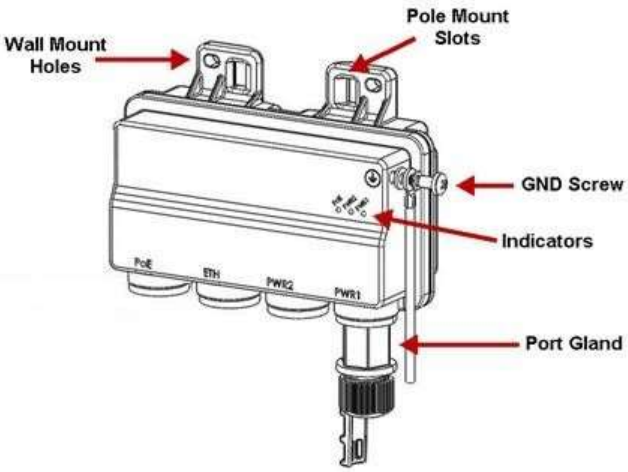

Figure 6: PoE Injector

Two models of the PoE Injector are available:

- **PoE_Inj_AO_2DC_24V_48V** – Includes two DC power ports with power input ranges of ±(18-60)V each.
- **PoE_Inj_AO** – Includes one DC power port (DC Power Port #1), with a power input range of ±(40-60)V.

2.3.1 PoE Injector Interfaces

- Power-Over-Ethernet (PoE) Port
- GbE Data Port supporting 10/100/1000Base-T
- DC Power Port 1 ±(18-60)V or ±(40-60)V
- DC Power Port 2 ±(18-60)V (Optional)
- Grounding screw

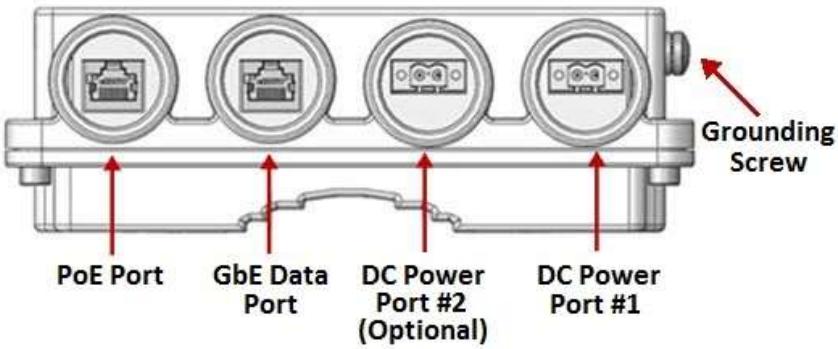

Ceragon Proprietary and Confidential

Figure 7: PoE Injector Ports

Ceragon Proprietary and Confidential

2.4 System Components

The following figures show the main components used in the IP-20C installation procedures.

Note! The availability of the installation components follows the IP-20C frequency rollout as stated in the published roadmap.
The presence of a specific component in this manual does not indicate that it is available for ordering. Please consult with your respective pre-sales engineer for specific component availability.

Figure 8: IP-20C

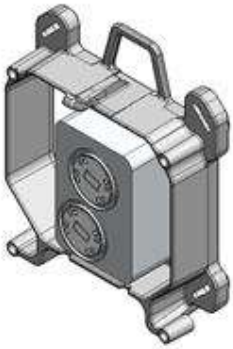

Figure 9: DC OMT

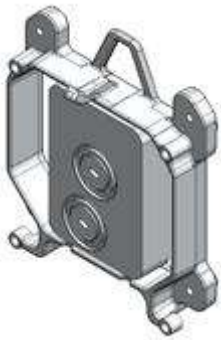

Figure 10: DC Splitter

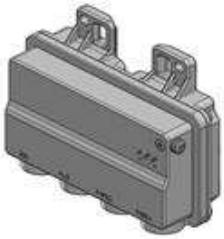

Figure 11: PoE Injector

Ceragon Proprietary and Confidential

2.5 Adaptors and Installation Kits

Table 2: PoE Injector

Marketing Model	Description
PoE_Inj_AO	PoE Injector all outdoor, -48VDC (Default offering)
PoE_Inj_AO_2DC_24V_48V	POE Injector all outdoor, redundant DC input, +24VDC support and -48VDC support
PoE_Inj_19inch_Rack_Mnt_kit	PoE Injector 19” Rack Mount Kit
PoE_Inj_ETSI_Rack_Mnt_kit	PoE Injector ETSI Rack Mount Kit

Ceragon Proprietary and Confidential

2.6 Antenna Connection

FibeAir iP-20C can be ordered with any of the following antennas:

- 1 ft antennas:
  - AN-3501-1
  - AN-2505-0
- 2 ft antennas:
  - AN-3315-1
  - AN-2517-1

2.6.1 Antenna Specifications for 1 ft Antennas

The following table lists the specifications for each available 1 ft antenna.

	AN-2505-0	AN-3501-1
Antenna Marketing Model	Am-1-26-CR1	Am-1-26-CR
General Specifications		
Nominal diameter	0.3m (1ft)	0.3m (1ft)
Polarization	Single, Vertical or Horizontal	Single, Vertical or Horizontal
Radio interface	Direct Mount for RFU-C type ODU	Direct Mount for RFU-C type ODU
Antenna color	NCS S 2502 R Grey	Gray (Pantone 1C)
Radome color	NCS S 2502 R Grey	Gray (Pantone 1C)
Radome type	UV Stabilized PC	Hard Cover
Packing type	Carton	Carton
Gross weight, kg	6.9 – 8.8	12±2
Packed dimensions, mm	395 (L) X 395 (W) X 285 (H)	500 (L) X 450 (W) X 320 (H)
Packing Volume, m^3	0.044	0.072
Electrical Specifications		
Frequency Band (GHz)	24.000 – 26.500	24.000 – 26.500
Waveguide Interface	UBR220	UBR220
Gain (dBi) Low	36.9	36.4
Gain (dBi) Mid	37.0	36.8
Gain (dBi) High	36.5	37.1
3 dB BW (°)	2.3	2.4
VSWR	1.30	1.30
F/B Ratio (dB)	71	63
XPD (dB)	30	30
RPE Number	906-HAE2603	BL 10587

Ceragon Proprietary and Confidential

Mechanical Specifications		
Wind Velocity Operational, km/h	180	200
Wind Velocity Survival Rating, km/h	250	250
Ice Load, mm	25	25
Azimuth Adjustment, Degrees	±15	±15
Elevation Adjustment, Degrees	±15	±15
Mounting Pipe Diameter, mm	50 to 120	51 to 114
Net weight, kg	5.2 kg	8.5±1
Feed horn, Operational Pressure, KPa	40	50
Operational Temperature, °C	-45 to +55	-45 to +60
Storage Temperature, °C	-55 to +85	-55 to +70
Adjustment Struts	None	None
Fixed Support Struts	None	None
Humidity	100%	100%
Rain Intensity, mm/min	15	15
Solar Radiation, W/m2	1120	1120
Electrical Properties	ETSI EN 302 217-4-2	ETSI EN 302 217-4-2
Vibration	ETSI 300 019-2-4 V2.2.2 (2003-04) T4.1E. 4M5	ETSI 300 019-2-4 V2.2.2 (2003-04) T4.1E.
RoHS 2002/95/EC	Compliant	Compliant

Ceragon Proprietary and Confidential

2.6.2 Antenna Specifications for 2 ft Antennas

The following table lists the specifications for each available 2 ft antenna.

	AN-2517-0	AN-3315-1
Antenna Marketing Model	Am-2-26-CR1	Am-2-26-CR
General Specifications		
Nominal diameter	0.6m (2ft)	0.6m (2ft)
Polarization	Single, Vertical or Horizontal	Single, Vertical or Horizontal
Radio interface	Direct Mount for RFU-C type ODU	Direct Mount for RFU-C type ODU
Antenna color	NCS S 2502 R Grey	Gray (Pantone 1C)
Radome color	NCS S 2502 R Grey	Gray (Pantone 1C)
Radome type	UV Stabilized PC	Hard Cover
Packing type	Carton	Carton
Gross weight, kg	11.2 – 12.4	18±2
Packed dimensions, mm	720/480 (L) X 790 (W) X 320 (H)	750 (L) X 750 (W) X 440 (H)
Packing Volume, m^3	0.144	0.248
Electrical Specifications		
Frequency Band (GHz)	24.000 – 26.500	24.000 – 26.500
Waveguide Interface	UBR220	UBR220
Gain (dBi) Low	42.0	41.1
Gain (dBi) Mid	42.4	41.5
Gain (dBi) High	42.3	41.8
3 dB BW (°)	1.4	1.4
VSWR	1.30	1.30
F/B Ratio (dB)	68	67
XPD (dB)	30	30
RPE Number	906-HAE2606	BL 10594
Mechanical Specifications		
Wind Velocity Operational, km/h	180	200
Wind Velocity Survival Rating, km/h	250	250
Ice Load, mm	25	25
Azimuth Adjustment, Degrees	±15	±15
Elevation Adjustment, Degrees	±15	±15
Mounting Pipe Diameter, mm	50 to 120	51 to 114
Net weight, kg	8.2 kg	11±1

Ceragon Proprietary and Confidential

	AN-2517-0	AN-3315-1
Feed horn, Operational Pressure, KPa	40	50
Operational Temperature, °C	-45 to +55	-45 to +60
Storage Temperature, °C	-55 to +85	-55 to +70
Adjustment Struts	None	None
Fixed Support Struts	None	None
Humidity	100%	100%
Rain Intensity, mm/min	15	15
Solar Radiation, W/m2	1120	1120
Electrical Properties	ETSI EN 302 217-4-2	ETSI EN 302 217-4-2
Vibration	ETSI 300 019-2-4 V2.2.2 (2003-04) T4.1E. 4M5	ETSI 300 019-2-4 V2.2.2 (2003-04) T4.1E.
RoHS 2002/95/EC	Compliant	Compliant

Ceragon Proprietary and Confidential

2.7 Power Specifications

2.7.1 Electrical Requirements

- -48V DC Nominal
- Maximum current rating 1.5 A
- Maximum Cable length 300 meter
- Maximum cable size for PoE cable is 24 AWG, with maximum current up to 2A from the power source.

2.7.2 Important Notes!

- The unit must only be installed by service personnel.
- The unit must have a permanent connection to protective grounding.
- Data port 2, Data port 3, the Management port, and the TNC connector do not provide protection from over-voltages on telecommunication networks for host equipment users.
- The RSL interface connector is intended for technician use only.
- Disconnect device (circuit breaker) in the building installation:
- Shall be readily accessible and incorporated external to the equipment.
- The maximum rating of the overcurrent protection shall be up to 6 Amp.

2.8 Environmental Specifications

Operating: ETSI EN 300 019-1-4 Class 4.1

Temperature range for continuous operating temperature with high reliability:
-33°C (-27°F) to +55°C (131°F)

Temperature range for exceptional temperatures; tested successfully, with limited margins:
-45°C (-49°F) to +60°C (140°F)

Humidity: 5%RH to 100%RH
IEC529 IP66

Storage: ETSI EN 300 019-1-1 Class 1.2

Transportation: ETSI EN 300 019-1-2 Class 2.3

Ceragon Proprietary and Confidential

3. Cable Installation and Grounding

3.1 Minimum and Maximum Cable Diameter

To fit the gland, the outer cable diameter should be between 6-10 mm. This applies to all glands on both the IP-20C unit and the PoE Injector.

To fit the grounding clamp, the outer diameter of CAT5E Ethernet cables must be between 6-7.1mm.

3.2 Cable Grounding

Cables must be grounded as follows:

- For fiber cables (see *Connecting an Optical Fiber Cable and SFP* on page 38), no grounding is required.
- For DC power cables (see *Connecting a DC Power Cable* on page 42), no grounding is required.
- For Ethernet cables, the shielded Ethernet cable (SF/UTP construction) should be grounded to the antenna tower at the top (next to the IP-20 unit), the entry to the indoor cabinet, and every 50m, using the kit CAT5E_gnd_kit.

Figure 12: Cable Grounding

3.2.1 Grounding Procedure

Required Tools

- Metric offset wrench key wrench #3
- Metric wrench 10mm

Ceragon Proprietary and Confidential

Procedure

1 On the front of each IP-20C unit, loosen the nut, plain washer, and serrated washer from the GND stud, using the metric offset hexagon key and the wrench.

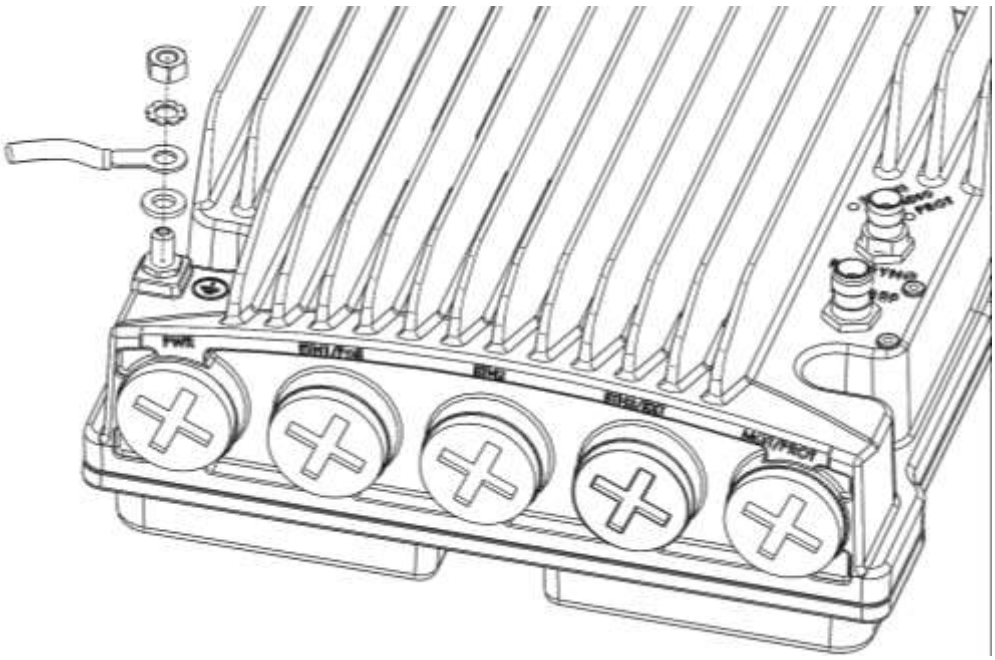

2 Place the cable lug (supplied with the IP-20C grounding kit) in place on the screw.
3 Secure the cable lug.
4 The second side of the GND cable should be connected to the main ground bar or terminal ground bar of the site.
5 Perform a resistance test between the 2 lugs of the GND cable. Verify that the result is 0-2 ohms.

Notes: The unit's earthing screw terminal shall be permanently connected to protective earth in a building installation in accordance with applicable national code and regulations by a service person.

A 2-pole circuit breaker, a branch circuit protector, suitably certified in accordance with applicable national code and regulations, rated maximum 20A, shall be installed for full power disconnection in a building installation.

Any outdoor antenna cable shield shall be permanently connected to protective earth in a building installation.

Ceragon Proprietary and Confidential

3.3 Power Source

The power cable must be plugged into the unit before turning on the external power.

When selecting a power source, the following must be considered:

DC power can be from -40 VDC to -60 VDC.

Recommended: Availability of a UPS (Uninterrupted Power Source), battery backup, and emergency power generator.

The power supply must have grounding points on the AC and DC sides.

Caution! The user power supply GND must be connected to the positive pole in the IP-20C power supply.
Any other connection may cause damage to the system!

Note! For the warranty to be honored, you must install the IP-20C in accordance with the instructions above.

3.4 Surge Protection

IP-20C includes built-in surge protection for its Ethernet and power interfaces. IP-20C's surge protection implementation complies with the standards set forth in the *Surge Protection* Requirements section of the IP-20C Technical Description, provided the Ethernet cables were prepared according to the instructions in *Connecting the Ethernet Cable* on page 45.

In areas in which severe lighting conditions are likely to occur, it is strongly recommended to add additional protection by placing lightning protectors on all electrical Ethernet cables, near the connection points with the IP-20C unit.

Ceragon Proprietary and Confidential

3.5 Available Cable Options

3.5.1 Fiber Optic Cables - Single Mode

Table 3: Fiber Optic Cables - Single Mode

Marketing P/N	Description
IP-20_FO_SM_LC2LC_ARM_7m	CABLE,FO,DUAL LC/LC,7M,SM,55mm OPEN END,M28 GLAND,ARMORED,OU
IP-20_FO_SM_LC2LC_ARM_15m	CABLE,FO,DUAL LC/LC,15M,SM,55mm OPEN END,M28 GLAND,ARMORED,O
IP-20_FO_SM_LC2LC_ARM_30m	CABLE,FO,DUAL LC/LC,30M,SM,55mm OPEN END,M28 GLAND,ARMORED,O
IP-20_FO_SM_LC2LC_ARM_50m	CABLE,FO,DUAL LC/LC,50M,SM,55mm OPEN END,M28 GLAND,ARMORED,O
IP-20_FO_SM_LC2LC_ARM_70m	CABLE,FO,DUAL LC/LC,70M,SM,55mm OPEN END,M28 GLAND,ARMORED,O
IP-20_FO_SM_LC2LC_ARM_80m	CABLE,FO,DUAL LC/LC,80M,SM,55mm OPEN END,M28 GLAND,ARMORED,O
IP-20_FO_SM_LC2LC_ARM_100m	CABLE,FO,DUAL LC/LC,100M,SM,55mm OPEN END,M28 GLAND,ARMORED
IP-20_FO_SM_LC2LC_ARM_150m	CABLE,FO,DUAL LC/LC,150M,SM,55mm OPEN END,M28 GLAND,ARMORED

3.5.2 Fiber Optic Cables - Multi Mode

Table 4: Fiber Optic Cables - Multi Mode

Marketing P/N	Description
IP-20_FO_MM_LC2LC_ARM_7m	CABLE,FO,DUAL LC/LC,7M,MM,55mm OPEN END,M28 GLAND,ARMORED,OU
IP-20_FO_MM_LC2LC_ARM_15m	CABLE,FO,DUAL LC/LC,15M,MM,55mm OPEN END,M28 GLAND,ARMORED,O
IP-20_FO_MM_LC2LC_ARM_20m	CABLE,FO,DUAL LC/LC,20M,MM,55mm OPEN END,M28 GLAND,ARMORED
IP-20_FO_MM_LC2LC_ARM_30m	CABLE,FO,DUAL LC/LC,30M,MM,55mm OPEN END,M28 GLAND,ARMORED,O
IP-20_FO_MM_LC2LC_ARM_50m	CABLE,FO,DUAL LC/LC,50M,MM,55mm OPEN END,M28 GLAND,ARMORED,O
IP-20_FO_MM_LC2LC_ARM_80m	CABLE,FO,DUAL LC/LC,80M,MM,55mm OPEN END,M28 GLAND,ARMORED,O

Ceragon Proprietary and Confidential

Marketing P/N	Description
IP-20_FO_MM_LC2LC_ARM_100m	CABLE,FO,DUAL LC/LC,100M,MM,55mm OPEN END,M28 GLAND,ARMORED
IP-20_FO_MM_LC2LC_ARM_150m	CABLE,FO,DUAL LC/LC,150M,MM,55mm OPEN END,M28 GLAND,ARMORED
IP-20_FO_MM_LC2LC_ARM_200m	CABLE,FO,DUAL LC/LC,200M,MM,55mm OPEN END,M28 GLAND,ARMORED

3.5.3 DC Cable and Connector

Table 5: DC Cable and Connector

Marketing P/N	Description
Outdoor_DC_cbl_2x18AWG_drum	CABLE,305M,OUTDOOR_DC_CBL_2X18AWG_DRUM
IP-20C_DC_Conn	IP-20C_DC_Conn

3.5.4 Ethernet Cable and Specifications

Table 6: Ethernet Cable and Specifications

Marketing P/N	Description
CAT5E_SFUTP_Outdoor_50m	CABLE,RJ45 TO RJ45 STR 50M,CAT-5E,ETHER,UV RES
CAT5E_SFUTP_Outdoor_75m	CABLE,RJ45 TO RJ45 STR 75M,CAT-5E,ETHER,UV RES
CAT5E_SFUTP_Outdoor_305m_drum	CABLE,MATERIAL,CAT-5E,SFUTP,4X2X24AWG,UV RESISTANCE,305M
CAT5E_Arm_50m	CABLE,RJ45 TO RJ45 STR,50M,CAT-5E,M28 GLAN,ARM,UV RESISTANCE
CAT5E_Arm_70m	CAT5E_Arm_75mCABLE,RJ45 TO RJ45 STR,70M,CAT-5E,M28 GLAN,ARM,UV RESISTANCE
CAT5E_Arm_305m_drum	CABLE,MATERIAL,CAT-5E,FTP,4X2X24AWG,ARMORED,UV RESIST,305M

This cable has the following specifications:

- Suitable for:
  - Fast Ethernet
  - Gigabit Ethernet
  - PoE

Cable Design – The numbers in the figure below refer to the items listed beneath the figure.

Ceragon Proprietary and Confidential

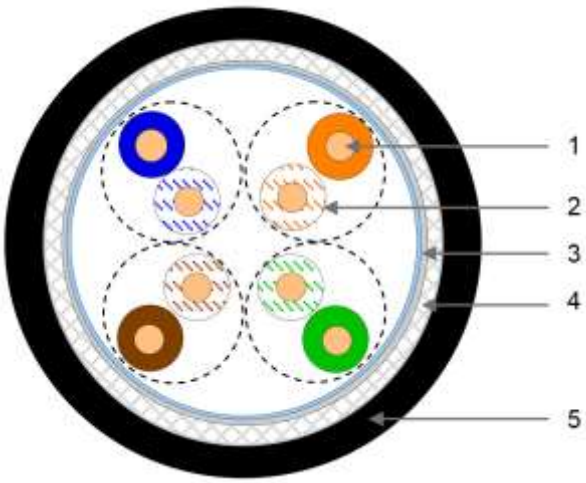

Figure 13: Cable Design

- [1] Conductor
- [2] Insulation
- [3] Screen: Alu/Pet foil. Alu outside
- [4] Tinned copper braid
- [5] Jacket

Table 7: Ethernet Cable Color Code

Pair	Wire A	Wire B
1	WHITE-blue	BLUE
2	WHITE-orange	ORANGE
3	WHITE-green	GREEN
4	WHITE-brown	BROWN

3.5.5 Outdoor Ethernet Cable Specifications

Table 8: Outdoor Ethernet Cable Specifications – Electrical Requirements

Cable type	**CAT-5e SFUTP**, 4 pairs, according to ANSI/TIA/EIA-568-B-2
Wire gage	24 AWG
Stranding	Solid
Voltage rating	70V
Shielding	Tinned copper Braid (Coverage: >=80%) + Aluminum Foil

Ceragon Proprietary and Confidential

Pinout	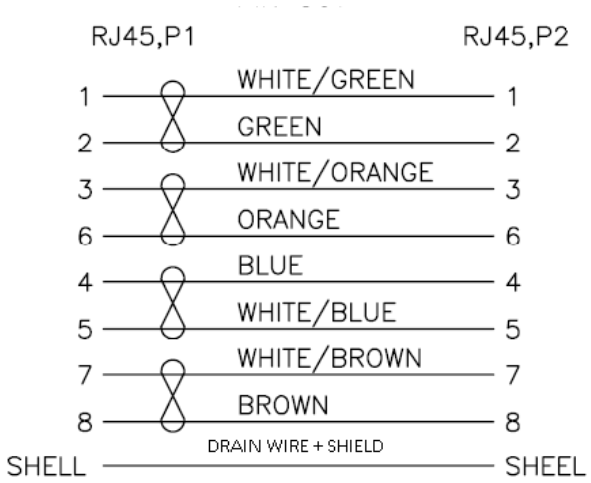

Table 9: Outdoor Ethernet Cable Specifications – Mechanical/ Environmental Requirements

Jacket	UV resistant
Outer diameter	6-7.1 mm (in order to be compatible with the grounding clamp, CAT5E_gnd_kit)
Operating and Storage temperature range	-40°C - 85°C
Flammability rating	According to UL-1581 VW1, IEC 60332-1
RoHS	According to Directive/2002/95/EC

3.5.6 Outdoor DC Cable Specifications

Table 10: Outdoor DC Cable Specifications – Electrical Requirements

Cable type	2 tinned copper wires
Wire gage	18 AWG (for <100m installations) 12 AWG (for >100m installations)
Stranding	stranded
Voltage rating	600V
Spark test	4KV
Dielectric strength	2KV AC min

Table 11: Outdoor DC Cable Specifications – Mechanical/ Environmental Requirements

Jacket	UV resistant
Outer diameter	7-10 mm

Ceragon Proprietary and Confidential

Operating and Storage temperature range	-40°C - 85°C
Flammability rating	According to UL-1581 VW1, IEC 60332-1
RoHS	According to Directive/2002/95/EC

3.6 Securing the Cables

All cables should be secured at every meter on-site using either a T-Rups kit, P/N Outdoor Ties (SI-0027-0) or cable clamps. When using the T-Rups kit, take special care to apply the proper amount of force in order to avoid damage to the cable. This is especially important for optical (SFP) cables.

The following cable clamps are available:

Table 12: Cable Clamps

Part Number	Marketing Model	Item Description
SI-1229-0	Fiber_clamp_2cbl_4.0-7.0mm	DUAL FEADER CLAMP FOR 4.0-7.0mm CABLE 2 WAY.
SI-1230-0	Fiber_clamp_4cbl_4.0-7.0mm	DUAL FEADER CLAMP FOR 4.0-7.0mm CABLE 4 WAY.
SI-1231-0	Fiber_clamp_6cbl_4.0-7.0mm	DUAL FEADER CLAMP FOR 4.0-7.0mm CABLE 6 WAY.

Ceragon Proprietary and Confidential

3.7 Special Instructions for use of Glands

Note: Each IP-20C unit is supplied with two glands. If additional glands are required, they must be ordered separately, in kits of five glands each.

Table 13: Glands Kit

Marketing Model	Marketing Description
IP-20_Glands_kit	IP-20_Glands_x5_kit

In addition, gland caps can be ordered to protect the cable and connector from damage when elevating the cable and gland to the radio unit. See Step 5 in Section 3.7.1, *General Installation Procedure*. Gland caps are ordered separately, in kits of 10 caps each.

Table 14: Gland Caps

Marketing Model	Marketing Description
Cable_Prot_10Caps_kit	Cable protective caps kit 10 pcs, IP-20C/S/E

In order to remove the plastic plugs for the unit, you can use the flange of supplied glands to disconnect them. See figures below.

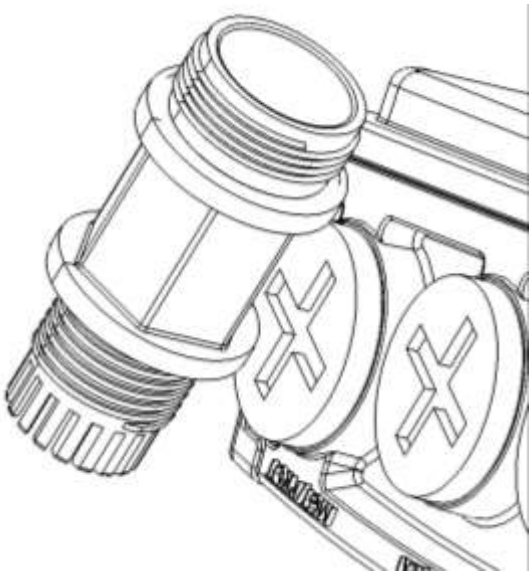

Ceragon Proprietary and Confidential

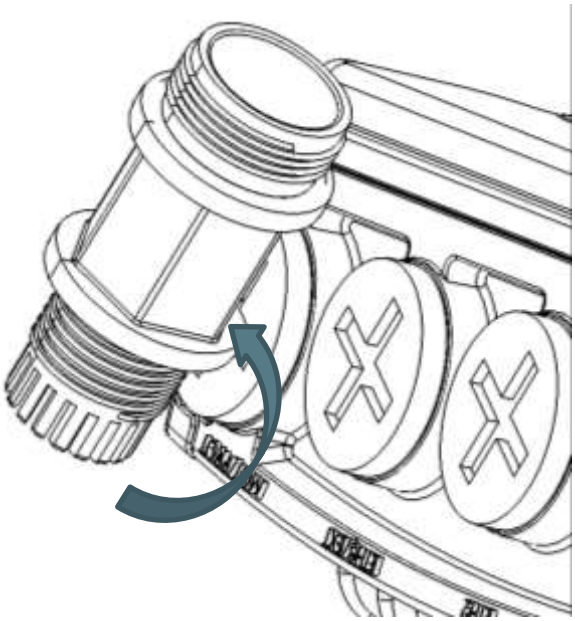

3.7.1 General Installation Procedure

This procedure applies to all cable types, and explains how to install the cables using long glands. The gland is supplied assembled.

1 Before inserting a cable, you must disassemble the gland cap and gland rubber from the gland body.

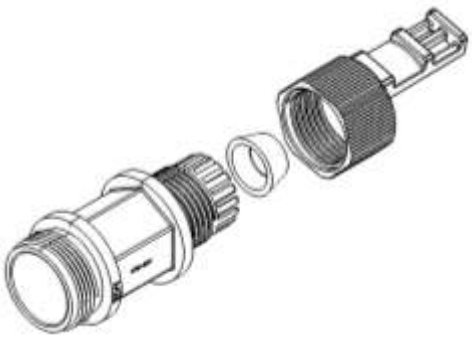

2 Slide the gland cap into the cable.

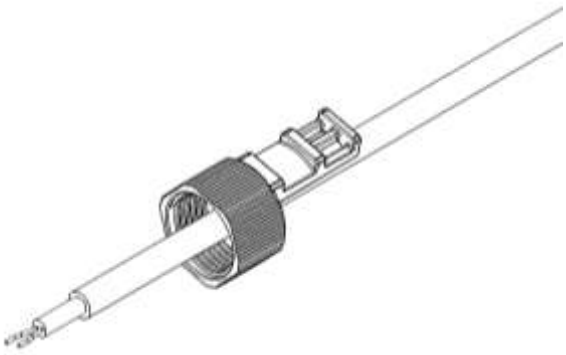

Ceragon Proprietary and Confidential

3 Slide the gland rubber into the cable.

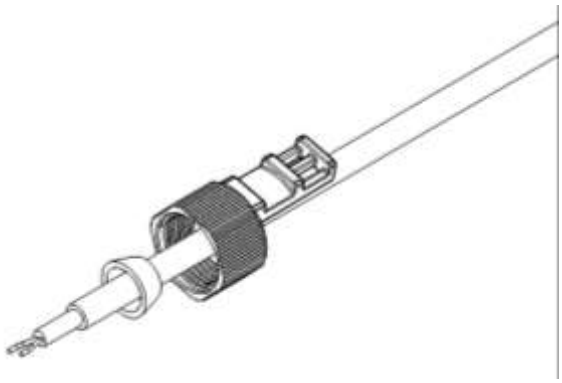

4 Slide the cable into the body of the gland. If you are using a gland cap (see Step 5), make sure to leave enough space for the gland cap to fit into the gland without disturbing the cable.

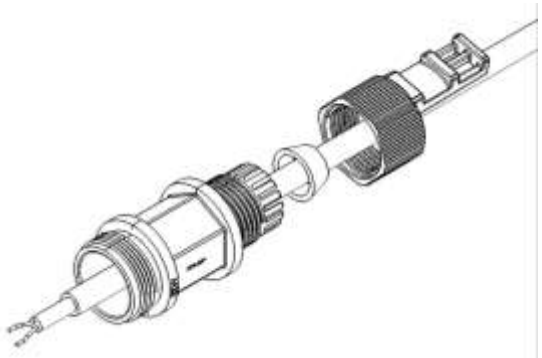

5 Optionally, after securing the cable into the body of the gland, you can close the other side of the gland with an M28 gland cap. The gland cap protects the cable and connector from damage when elevating the cable and gland to the radio unit.

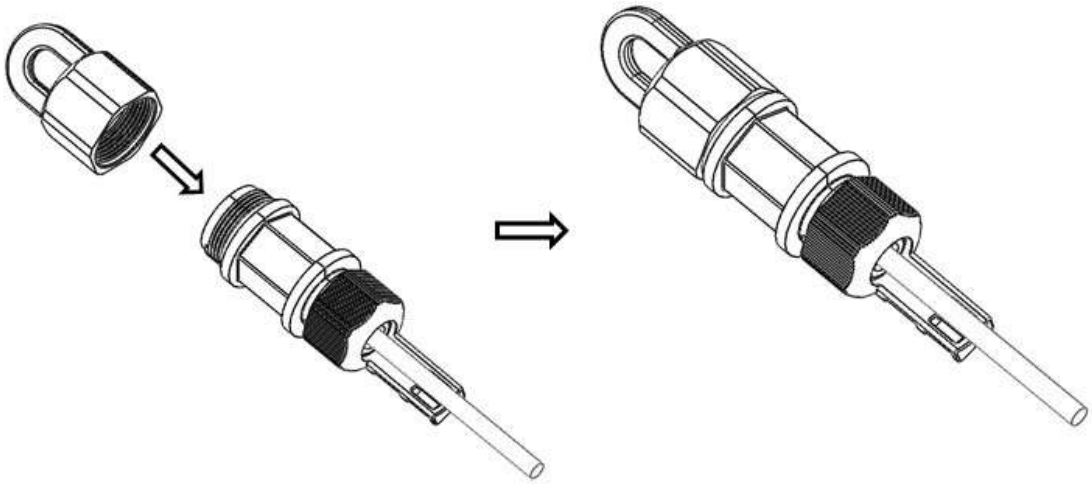

Ceragon Proprietary and Confidential

6 The M28 gland cap has a hook on top. After attaching the gland cap to the gland, you can connect a rope to the hook and use this to lift the gland and cable up to the radio unit. Before screwing the gland into the radio unit, you must remove the gland cap.

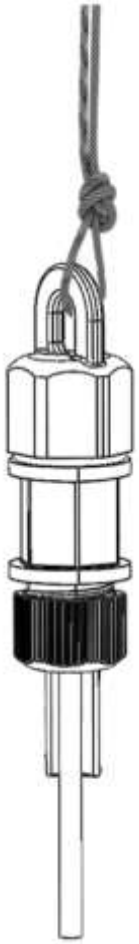

7 If you used an M28 gland cap to close the gland when raising the gland and cable to the radio unit, remove the gland cap from the gland at this point by unscrewing the cap.
8 Connect the cable to the port.
9 Screw the gland into the radio unit until there is full contact between the gland and the radio unit.

Ceragon Proprietary and Confidential

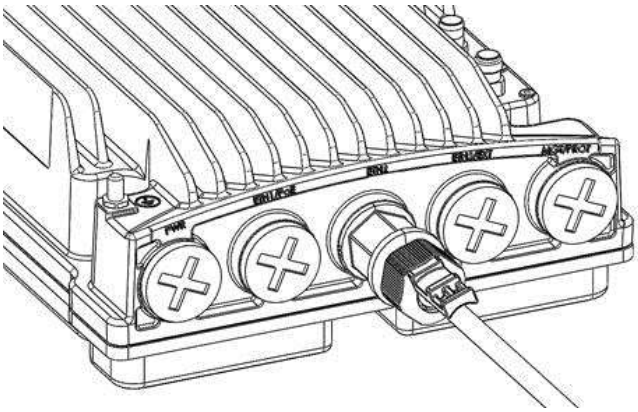

Important Note! Before tightening the gland, make sure the gland is aligned with the tapped hole in the unit. Tightening the gland at an angle can ruin the thread on the gland and prevent proper sealing of the interface.

10 Insert the main part of the gland into the thread in the radio body and tighten until there is full contact and the gasket is fully contained between the gland and the radio and cannot be seen. Tighten the gland gently and make sure there is no resistance. If there is resistance, stop immediately, and thread out the gland. Verify that the gland thread is not damaged and tighten the gland again.

Important Note! Pay attention that the gland rubber is properly located and not damaged during the tightening of the gland cap.
If the gland thread is damaged do not use it!

11 Tighten the rear portion of the gland onto the main part of the gland and make sure that the main part of the gland does not have an additional swivel after the rear portion is secured.

Note: If the main portion of the gland is rotated while the rear portion is seizing the cable, this may ruin the cable connector.

Ceragon Proprietary and Confidential

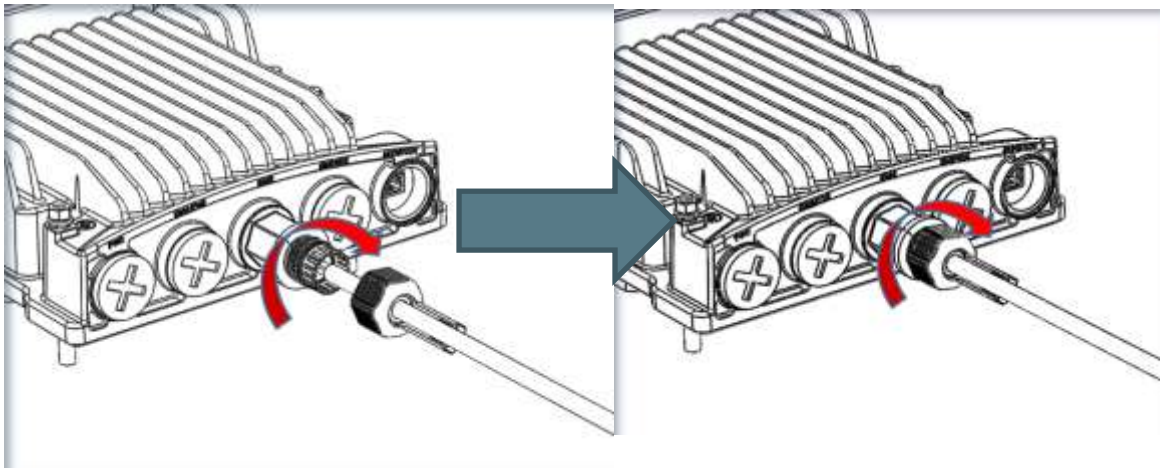

Figure 14: Tightening the Front Portion of the Gland

Figure 15: Tightening the Rear Portion of the Gland

12 Secure the cable to the lip of the gland using a tie wrap.

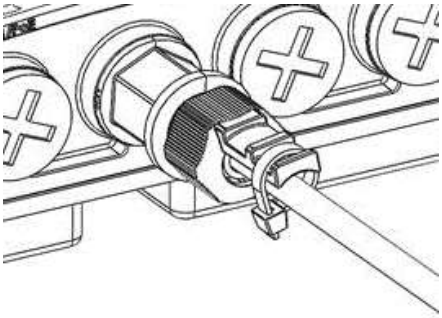

Ceragon Proprietary and Confidential

3.8 Connecting an Optical Fiber Cable and SFP

To connect an optical fiber cable and the SFP transceiver:

1 Use a pre-assembled cable.

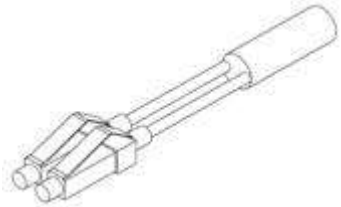

2 Split the connector into two separate LC connectors (one for each fiber).

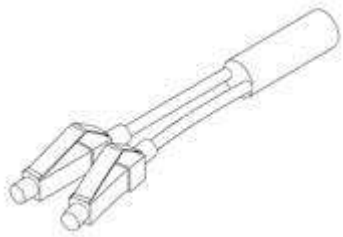

3 Remove the gland cap and rubber from the gland body.

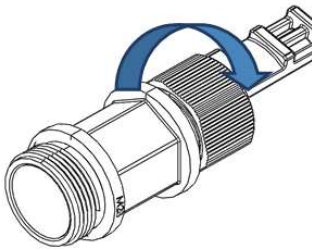

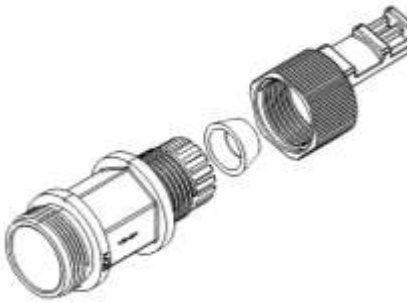

4 Slide the gland cap into the cable.
5 Slide the rubber into the cable.

Ceragon Proprietary and Confidential

6 Insert the fibers with the connectors one by one into the cable gland.

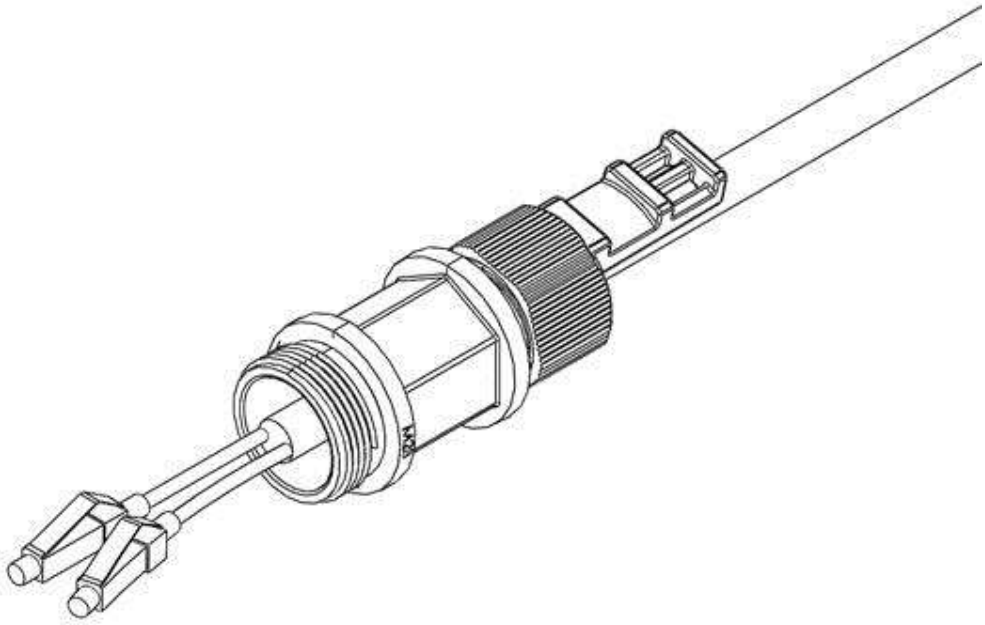

7 Secure the cable to the lip of the gland using a tie wrap.

Important Note! If you are raising the cable to a radio unit on a tower, this step is crucial to prevent the cable from slipping from the gland, which could damage the connector.

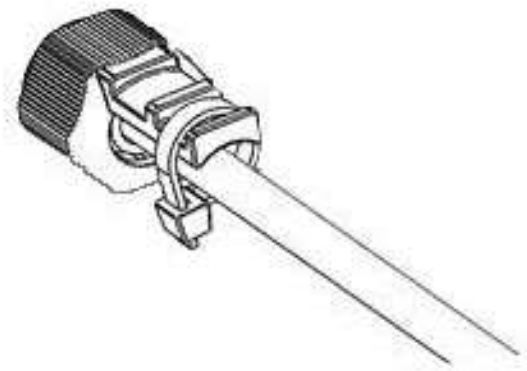

Ceragon Proprietary and Confidential

8 Connect the fibers to the SFP transceiver. Listen for the “click” to ensure that they are fully inserted.

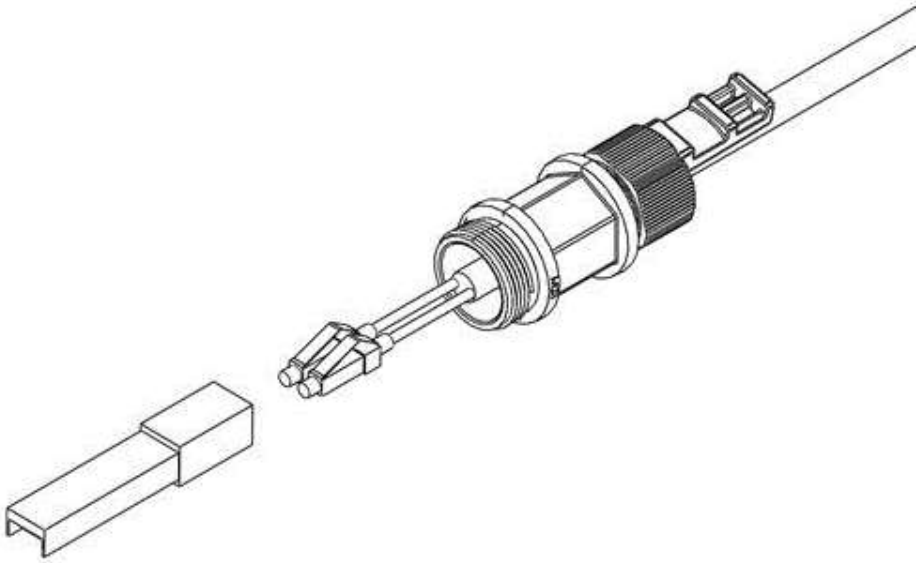

9 Remove the tie wrap securing the cable to the gland.

Note:	A new tie wrap must be used to secure the cable to the gland at the end of the procedure, as described in Step 13.

10 Connect the connector into the IP-20C connector.

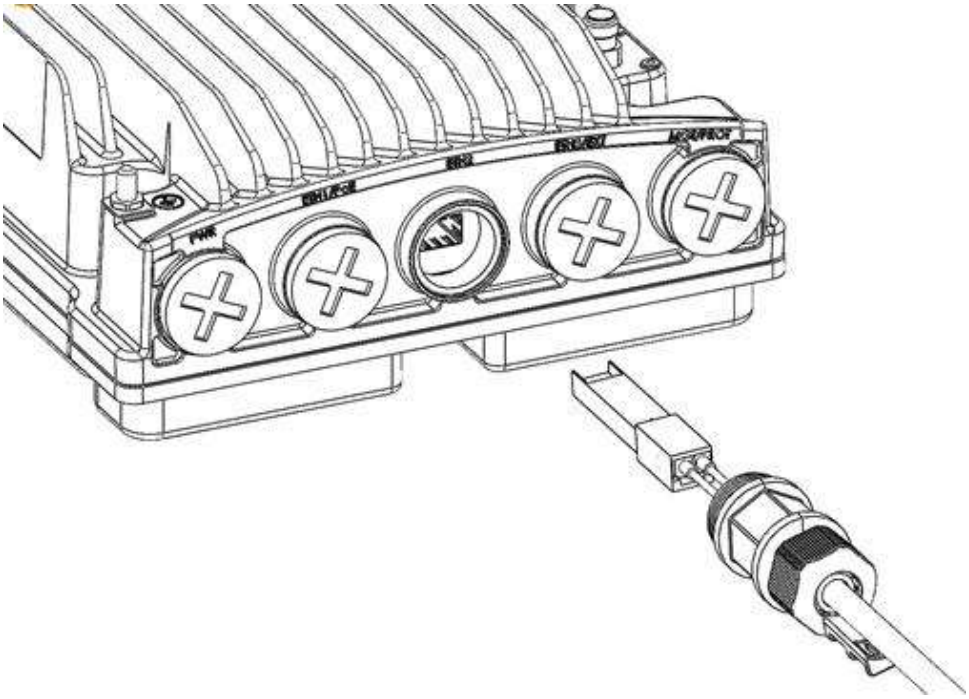

11 Tighten the gland to the radio unit until there is full contact between the gland and the radio unit.

Ceragon Proprietary and Confidential

12 Tighten the gland cap.

Important Note! Before tightening the gland, make sure the gland is aligned with the tapped hole in the unit.

Tightening the gland at an angle can ruin the thread on the gland and prevent proper sealing of the interface Tighten the gland gently and make sure there is no resistance. If there is resistance, stop immediately, thread out the gland, and verify that the gland threads are not damaged. Then, tighten the gland again.

If the gland thread is damaged do not use it!

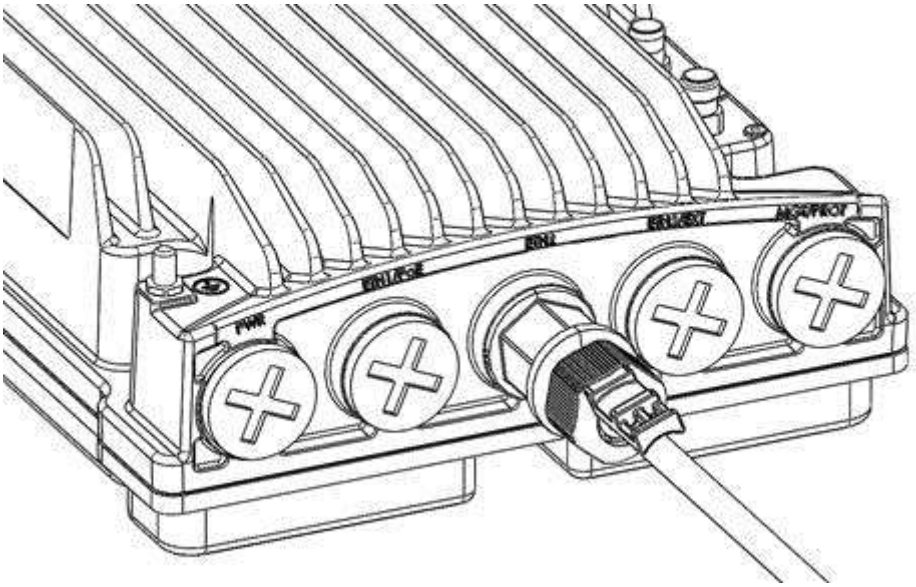

13 Secure the cable to the gland using a tie wrap.

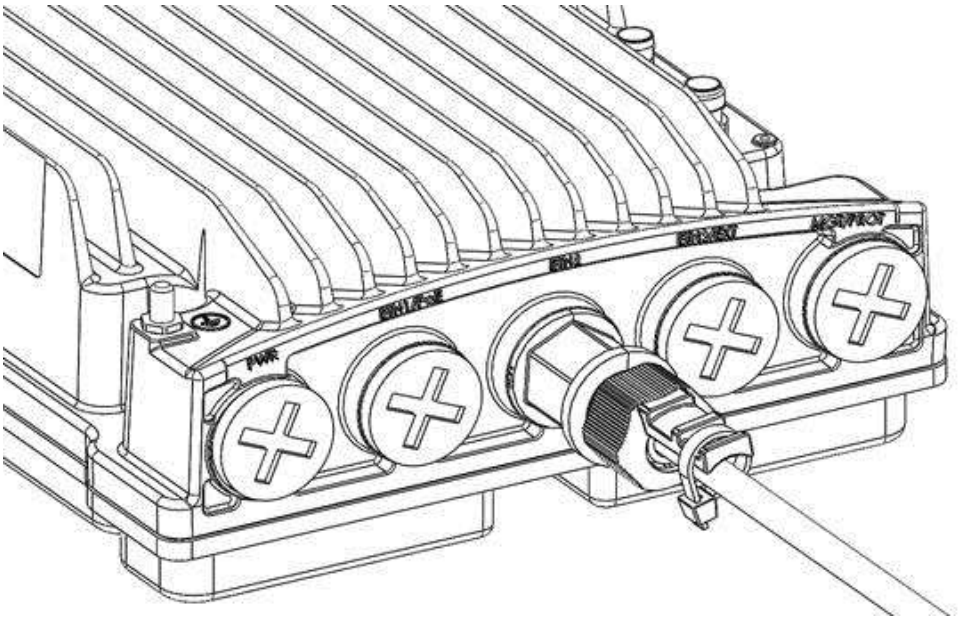

Ceragon Proprietary and Confidential

3.9 Connecting a DC Power Cable

Note: The DC power cable and connector must be ordered separately. See *DC Cable and Connector* on page 28.

To connect a DC power cable:

1 Strip off 45 mm from the cable jacket.
2 Expose 10 mm at the edge of each of the two wires.

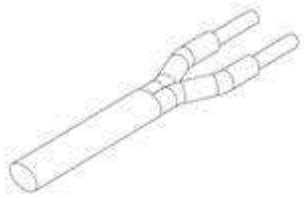

3 Insert the power cable into the gland.

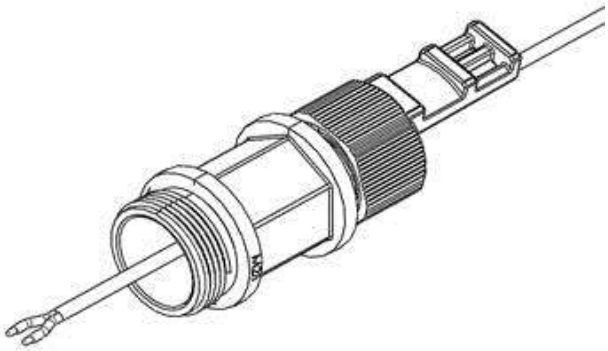

4 Insert the power cable wires into the power connector.
5 Insert the power cable wires into the power connector. Match “+” to the 0V wire and “-“ to the -48V wire.

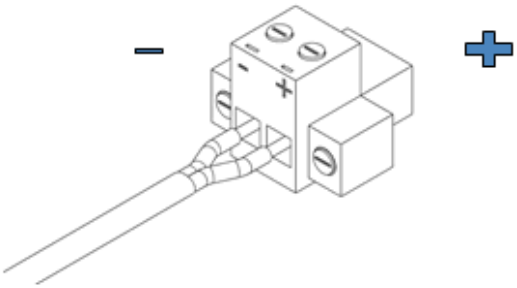

Ceragon Proprietary and Confidential

6 Tighten the two top screws.

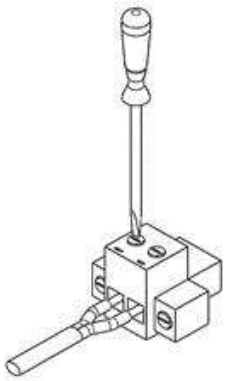

7 Plug the power cable with connector into the IP-20C power connector.

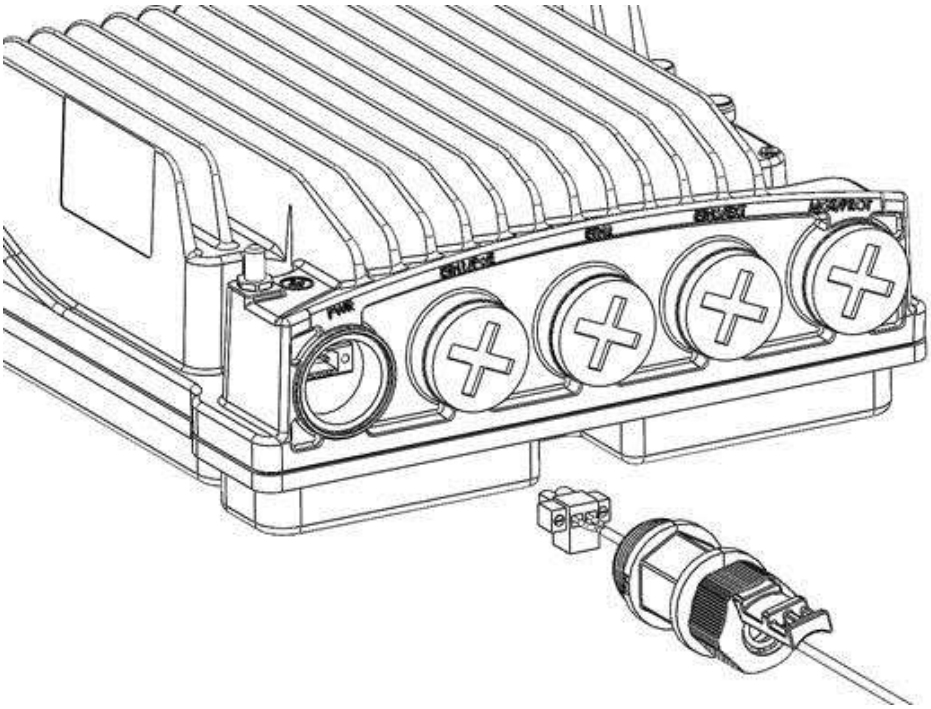

8 Tighten the two front screws.

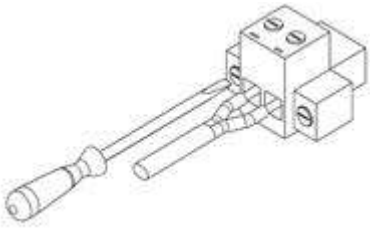

Ceragon Proprietary and Confidential

9 Screw the gland into the radio unit

Important Note! Before tightening the gland, make sure the gland is even with the cover. Tighten the gland gently and make sure there is no resistance. If there is resistance, stop immediately and verify that the gland is not being inserted at an angle. Tightening the gland at an angle can ruin the thread on the gland and prevent proper sealing of the interface.

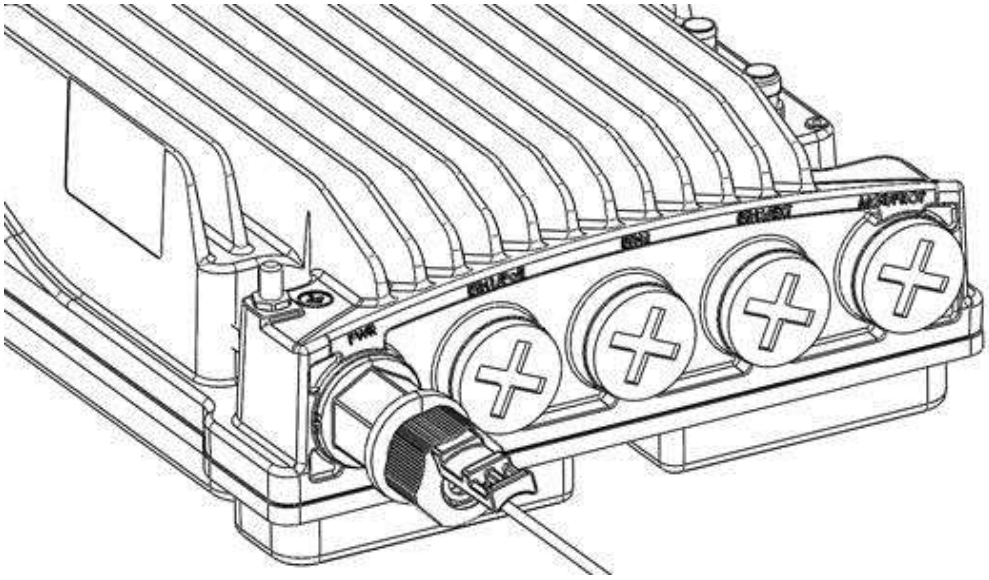

10 Tighten the gland cap.

11 Secure the cable to the gland with a tie wrap.

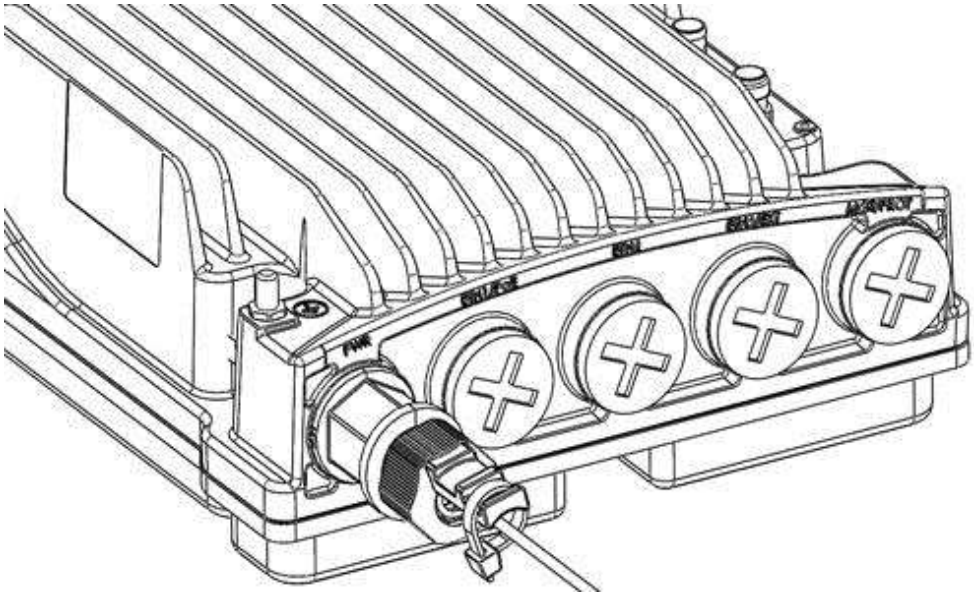

Ceragon Proprietary and Confidential

3.10 Connecting the Ethernet Cable

If you need to assemble the Ethernet cable, follow the instructions in section 3.10.1, *Preparing the Ethernet Cable and Plug-in Field*, then proceed to section 3.10.3, *Connection of Ethernet Cable to IP-20C*.

If you using a pre-assembled Ethernet cable, follow the instructions in section 3.10.2, *Preparing the Ethernet Cable Already Assembled*, then proceed to section 3.10.3, *Connection of Ethernet Cable to IP-20C*.

Note: To ensure proper grounding and connectivity, it is recommended to use pre-assembled Ethernet cables.

3.10.1 Preparing the Ethernet Cable and Plug-in Field

Important Note! To ensure proper grounding, the RJ-45 plug must be shielded, with a crimping tail.

To prepare the Ethernet cable and plug-in field:

1. Prepare the gland and insert the cable, as described in *General Installation Procedure* on page 33.
2. Strip off approximately 45 mm of the outer insulation jacket from the CAT5E cable.
3. Do not strip off the end of the cable shield, but rather, twist the shield to form a braid.

4. Roll back the foil shield insulation and wrap the drain wire around the foil. Do not remove any insulation from the conductors.
5. Align the colored wires.

Ceragon Proprietary and Confidential

Note: Cord colors should be matched to the same pins on both ends of the cable.

6 Trim all wires to the same length. About 12 mm on the left should be exposed from the inner sheath.
7 Separate the wires and place the twisted shield between the separated wires.

8 Insert the wires into the RJ45 plug. Verify that each wire is fully inserted into the front of the RJ45 plug and in the correct order, according to the pinouts shown in Section 3.5.5, *Outdoor Ethernet Cable Specifications*. The sheath of the Ethernet cable should extend into the plug by about 13 mm and held in place by the crimp.
9 Extend the cable jacket with the shield into the connector about 5 mm for strain relief and shielding connection.

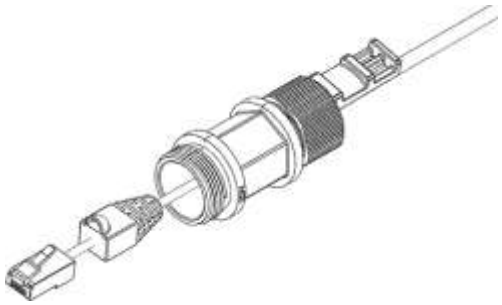

10 Wrap the twisted braid firmly around the cable jacket and let the crimping tail of the RJ45 plug envelop it.

Important Note! To ensure proper grounding, it is essential that the twisted braid be firmly connected to the RJ45 plug.

Ceragon Proprietary and Confidential

11 Crimp the RJ45 plug with the crimp tool. Make sure the twisted shield is crimped firmly to the RJ45 plug.

12 Verify that the wires ended up the correct order and that the wires extend to the front of the RJ45 plug and make good contact with the metal contacts in the RJ45 plug.
13 Push back the CAT5E plug cover on the connector plug.

Note: It is recommended that the newly prepared cable be tested with a Cable Analyzer such as the FLUKE DTX-1800 (or the equivalent), to make sure the cable complies with ANSI/TIA/EIA-568-B-2. Make sure to verify both connectivity and grounding continuity at both ends of the cable.

3.10.2 Preparing the Ethernet Cable Already Assembled

To prepare the Ethernet cable already assembled:

1 Release the gland cap and the gland rubber slightly.

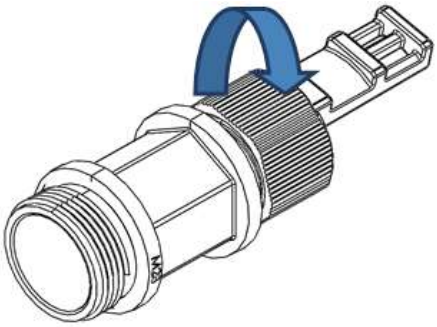

2 Insert the CAT5E cable into the gland cap and into the rubber gland.

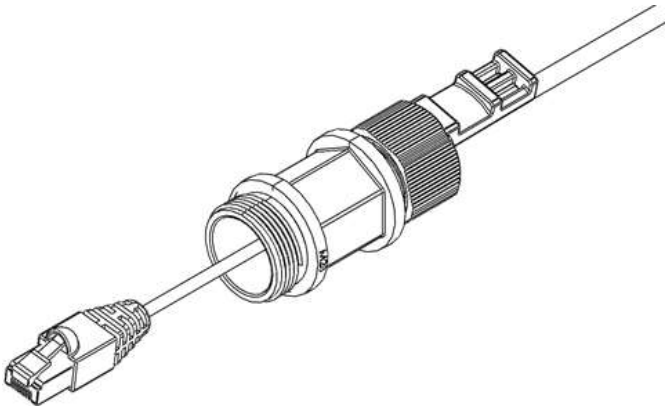

3 Insert the CAT5E cable into the gland body.

Ceragon Proprietary and Confidential

3.10.3 Connection of Ethernet Cable to IP-20C

To connect the Ethernet cable to the IP-20C:

1 Remove the relevant cap from the IP-20C radio. You can use the side of the gland to unscrew the cap.

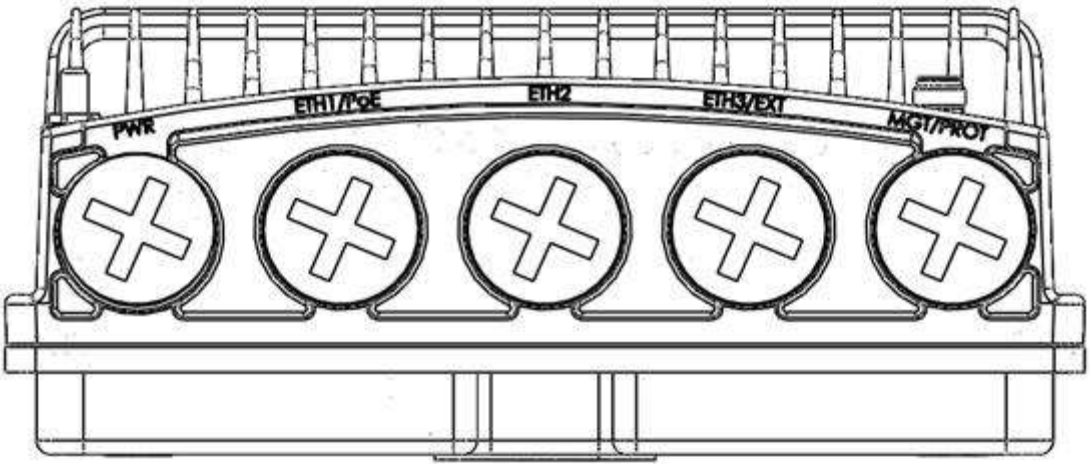

2 Connect the CAT5E cable to the IP-20C.

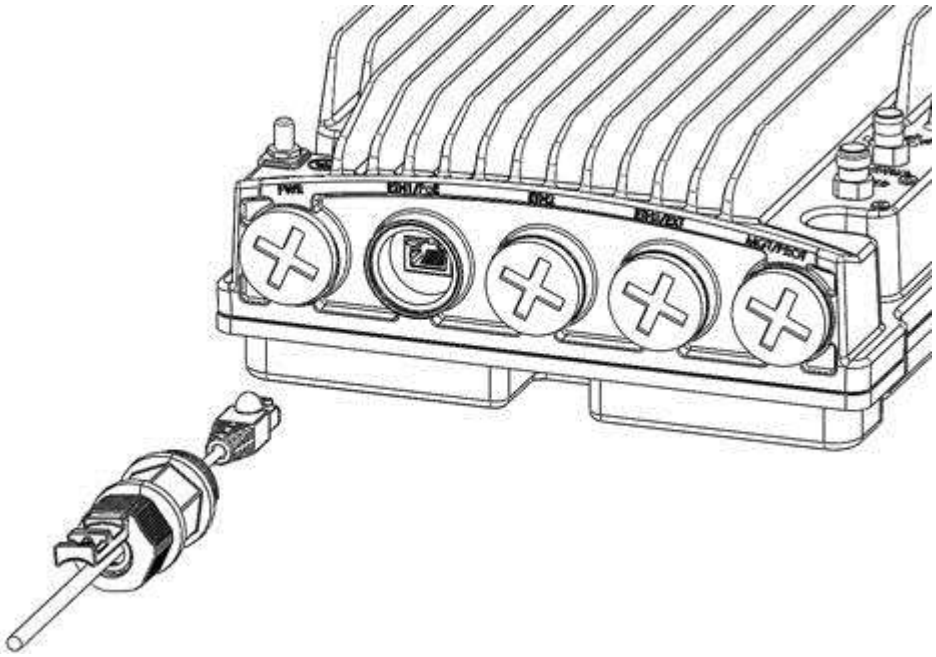

Ceragon Proprietary and Confidential

3 Screw the gland into the radio unit.

Important Note! Before tightening the gland, make sure the gland is even with the cover. Tighten the gland gently and make sure there is no resistance. If there is resistance, stop immediately and verify that the gland is not being inserted at an angle. Tightening the gland at an angle can ruin the thread on the gland and prevent proper sealing of the interface.

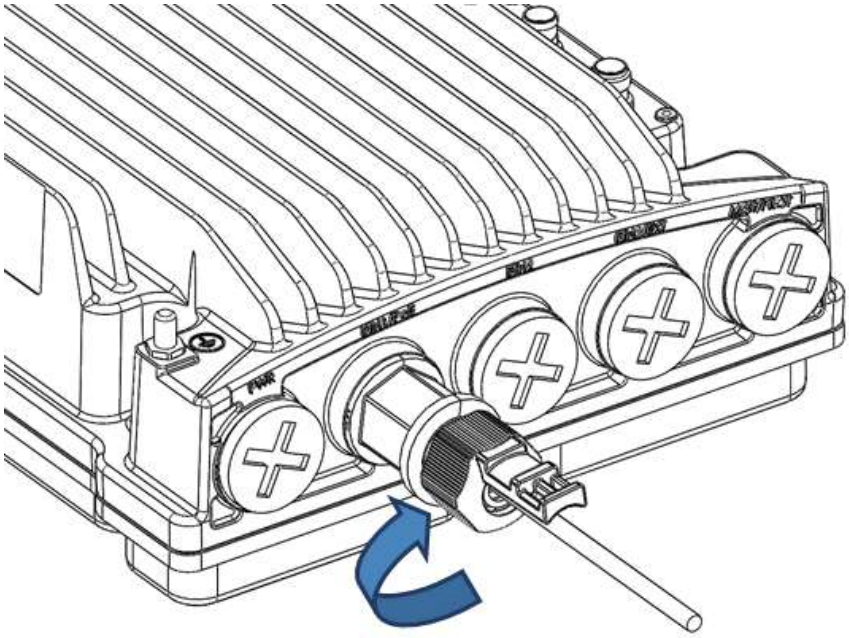

4 Tighten the gland cap.
5 Secure the cable to the gland using a tie wrap.

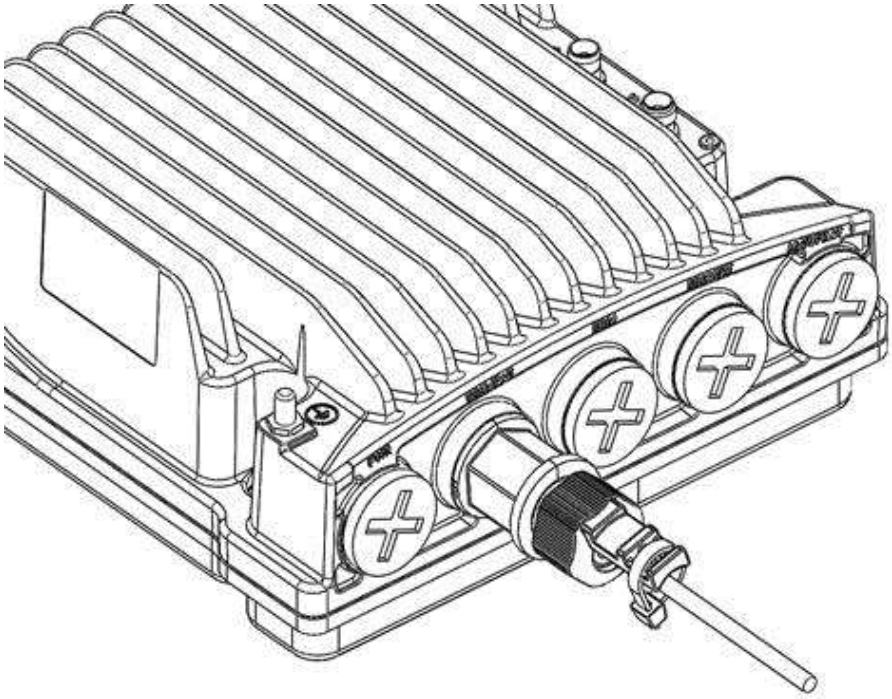

Ceragon Proprietary and Confidential

4. PoE Injector Installation and Connection

4.1 PoE Injector Cable Connection

The PoE Injector cables are connected similar to the IP-20C.

- To connect the Ethernet (CAT5E) cable to the PoE or Data port, refer to *Connection of Ethernet Cable to IP-20C* on page 48.
- To connect the DC power cable to the power port or dual feed port, refer to *Connecting a DC Power Cable* on page 42. This cable is not supplied with the PoE Injector.
- The total length of the cable between the IP-20C port and the Switch/Router the device is connected to should not exceed 100m/328ft. This length includes the connection between the IP-20C and the PoE Injector (X1 + X2 ≤ 100m/328ft in the figure below).

Note:	The length of the cable connecting the customer equipment to the PoE injector should not be longer than 10m (according to ANSI/TIA-568 standard).

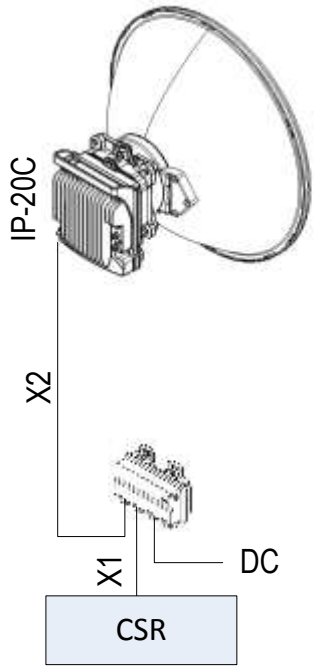

Note!	For the warranty to be honored, the connection must be through the glands only. Do not open the PoE injector box cover.

Ceragon Proprietary and Confidential

4.2 PoE Injector Grounding

To ground the PoE Injector:

1 On the right side of each PoE Injector, loosen the screw, plain washer, and serrated washer.
2 Place the cable lug (supplied with the PoE injector kit) between the plain and serrated washer.
3 Tighten the screw.
4 Perform a resistance test between the 2 lugs of the GND cable. Verify that the result is 0-2 ohms.

4.3 PoE Injector Wall Mount Installation

List of Items

Item	Description	Quantity	Remarks
1	PoE Injector	1	
1	Glands Kit	1	For outdoor installations.

Notes: Glands are required for outdoor installations. The glands kit (three or five glands) is not supplied with the PoE Injector, and must be ordered separately.

Glands Kit

Marketing Model	Marketing Description
IP-20_3xGlands_kit	IP-20_3xGlands_kit
IP-20_Glands_kit	IP-20_Glands_x5_kit

Required Tools

- Metric offset wrench key wrench set
- Hammer
- Drilling Machine

Procedure

1 Mount and tighten the PoE Injector to a wall using two M6 bolts and anchors. The M6 bolts and anchors must be purchased separately.

Note: Use Anchor Stainless Steel with flanged Hexagonal nut M6X70.

2 Drill two 6mm diameter holes with 100mm distance between the centers of the holes.
3 Insert the anchors with the bolts.

Ceragon Proprietary and Confidential

4 Place the washers on the bolt.
5 Tighten the nuts.

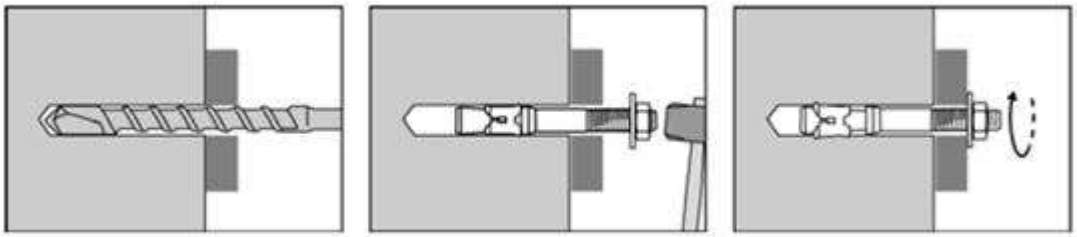

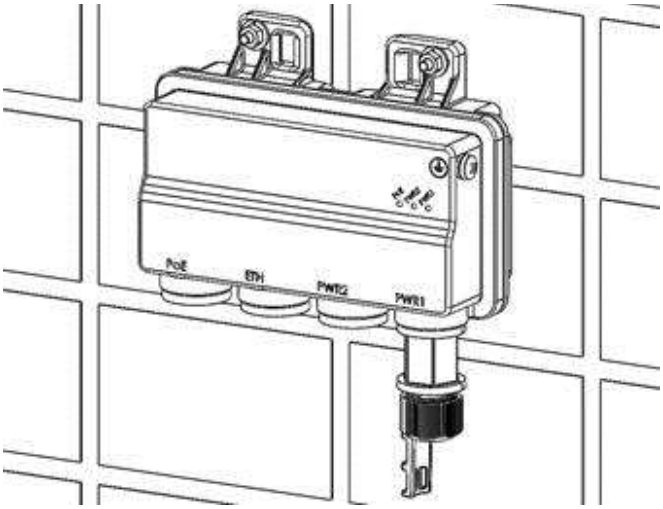

Ceragon Proprietary and Confidential

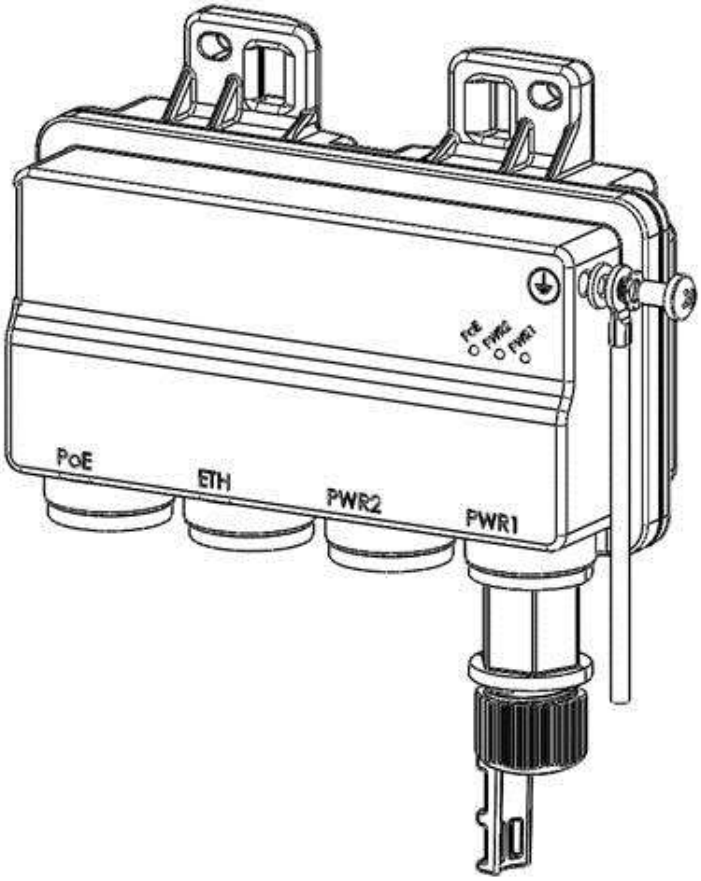

4.4 PoE Injector Pole Mount Installation

List of Items

Item	Description	Quantity	Remarks
1	PoE Injector	1	

Required Tools

- Slot Screwdriver

Procedure

To mount the PoE Injector on a pole:

1 Mount and tighten the PoE Injector to a pole with a diameter of 114 mm using a stainless steel hose clamp.
2 Pass the hose clamp through the pole mount slots.

Note! The Hose Clamp is not supplied with PoE injector kit.

3 Attach the PoE injector to the pole.

Ceragon Proprietary and Confidential

4 Connect the ends of the hose clamp.
5 Tighten the hose clamp using the captive screw.

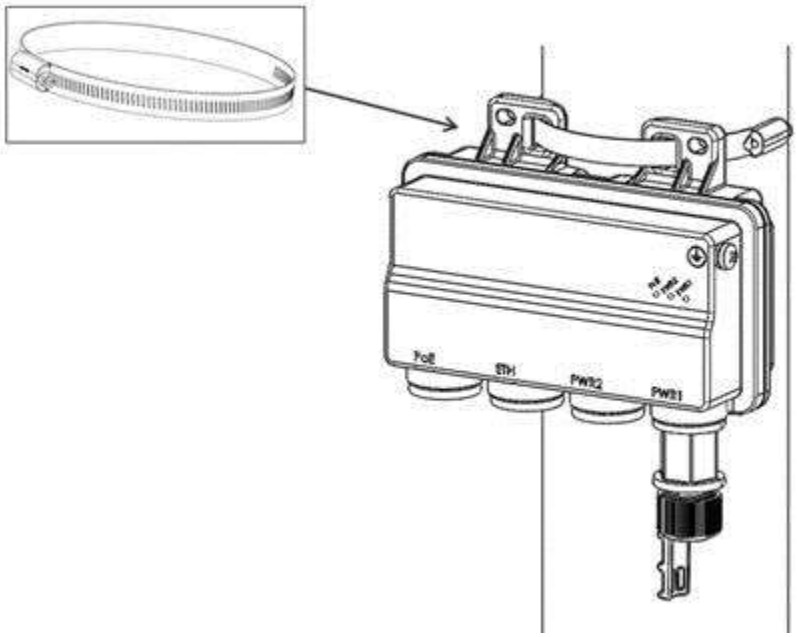

4.5 PoE Injector 19” Rack Installation

List of Items

Item	Description	Quantity	Remarks
1	PoE Injector	1	
2	PoE Injector 19” Rack Mount Kit	1	

Required Tools

- Philips Screwdriver

To mount the PoE Injector on a rack:

1 Mount the PoE Injector to a 19” rack using a 19” rack adaptor.
2 Mount the PoE Injector on the 19” adaptor through the wall mounting holes, using M6 screws and washers.

Ceragon Proprietary and Confidential

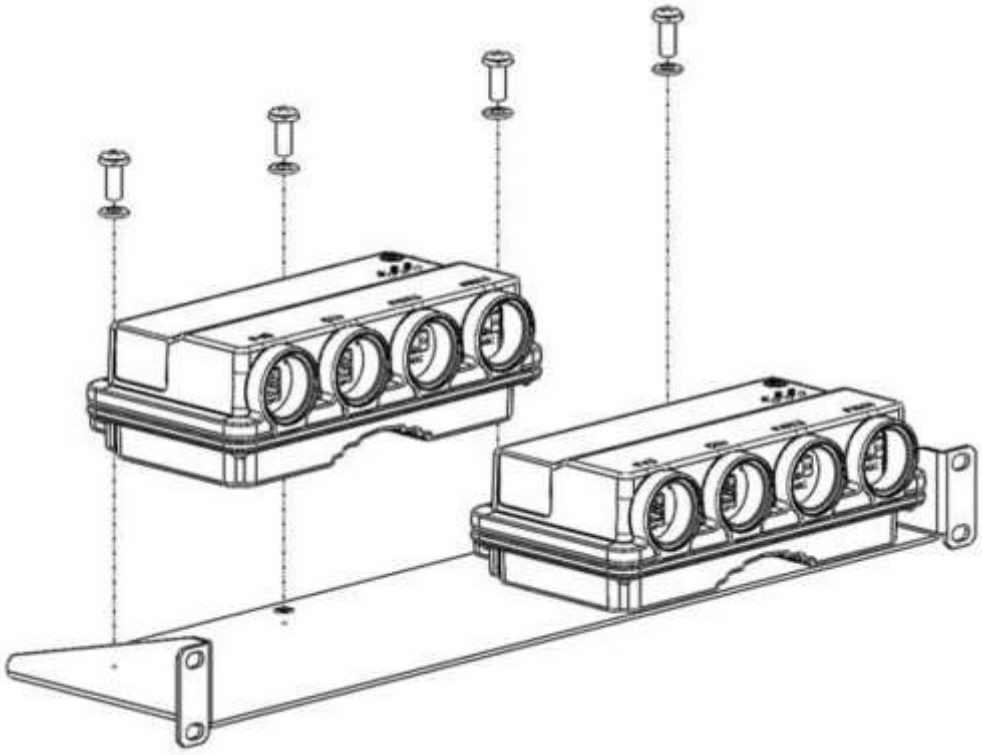

3 Mount the 19” rack adaptor to a 19” rack using four M6 screws and cage nuts.

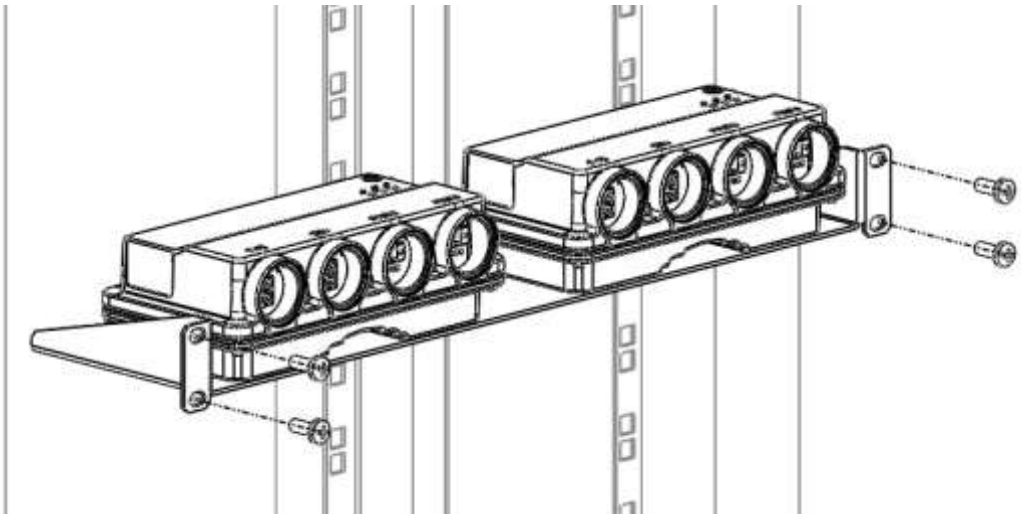

Ceragon Proprietary and Confidential

4.6 PoE Injector ETSI Rack Installation

List of Items

Item	Description	Quantity	Remarks
1	PoE Injector	1	
2	PoE Injector ETSI Rack Mount Kit	1	

Required Tools

- Philips Screwdriver

To mount the PoE Injector to an ETSI rack:

1 Mount the PoE Injector to an ETSI rack using a 19” rack adaptor and ETSI adapting ears.
2 Connect the ETSI adapting ears to a 19” rack adaptor using four M6 screws.

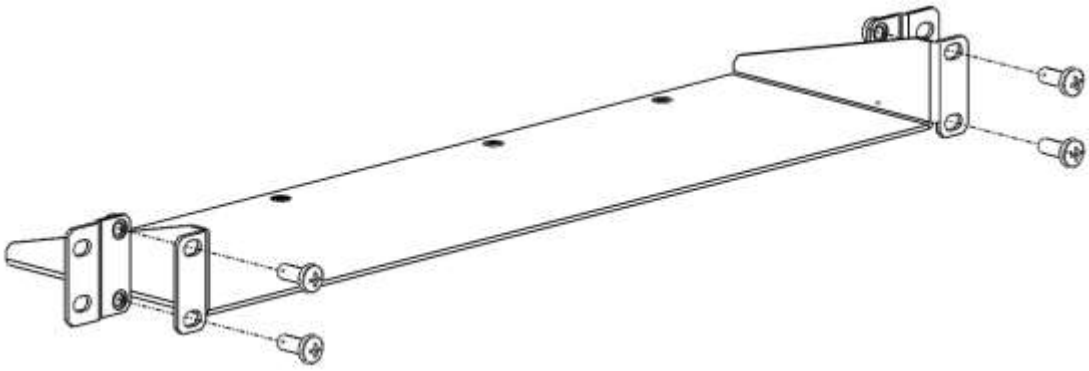

3 Mount the PoE Injector on the adaptor through the wall mounting holes using M6 screws and washers.

Ceragon Proprietary and Confidential

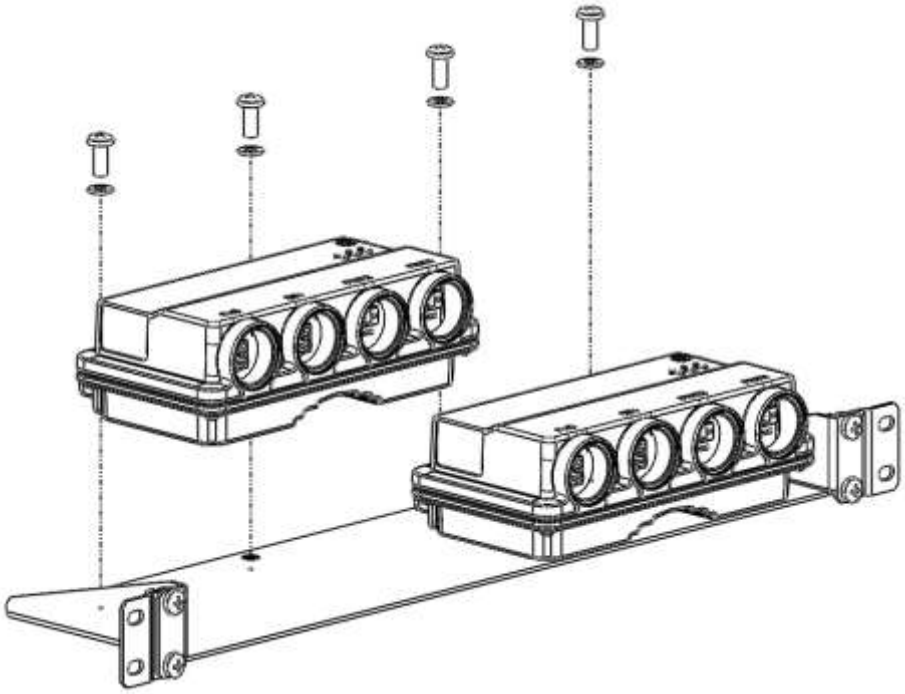

4 Mount the 19” rack adaptor with the ETSI ears on the ETSI rack using four M6 screws and cage nuts.

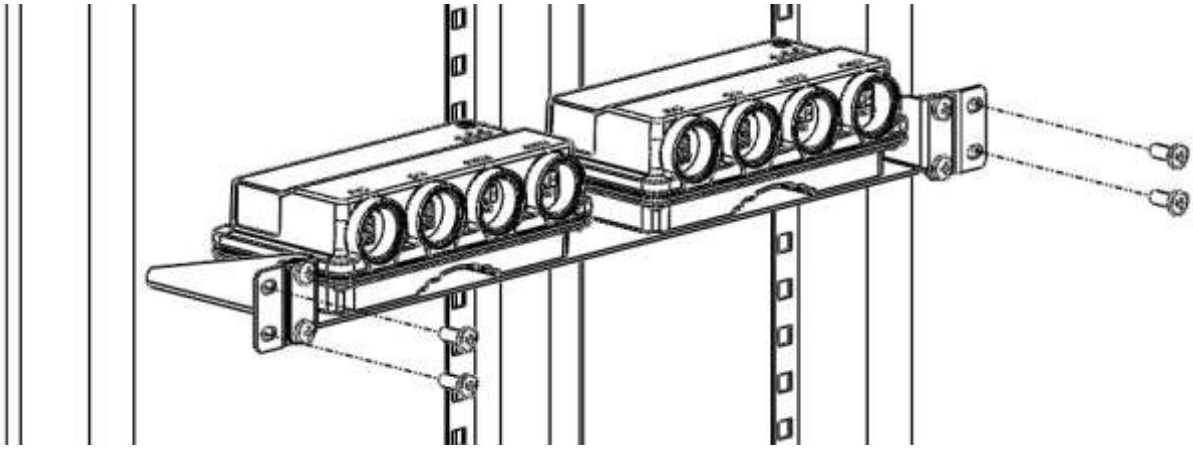

Note: For this type of installation, a 2RU space is required.

Ceragon Proprietary and Confidential

5. Generic Installation Procedures

5.1 General Notes Concerning All Installation Procedures

Since the IP-20C architecture is of a Dual Core nature, each dual core configuration can be considered as single core configuration hardware ready for its dual core counterpart. Therefore, you should follow the same procedure for *2+0 SP* installation, if you want to install a *1+0 SP HW ready for 2+0 SP*.

One of the major benefits of the IP-20C and the dual core architecture is that upgrading can be done remotely by uploading the correct software license.

Important! Do not remove the transparent pressure windows located on the antenna interfaces.

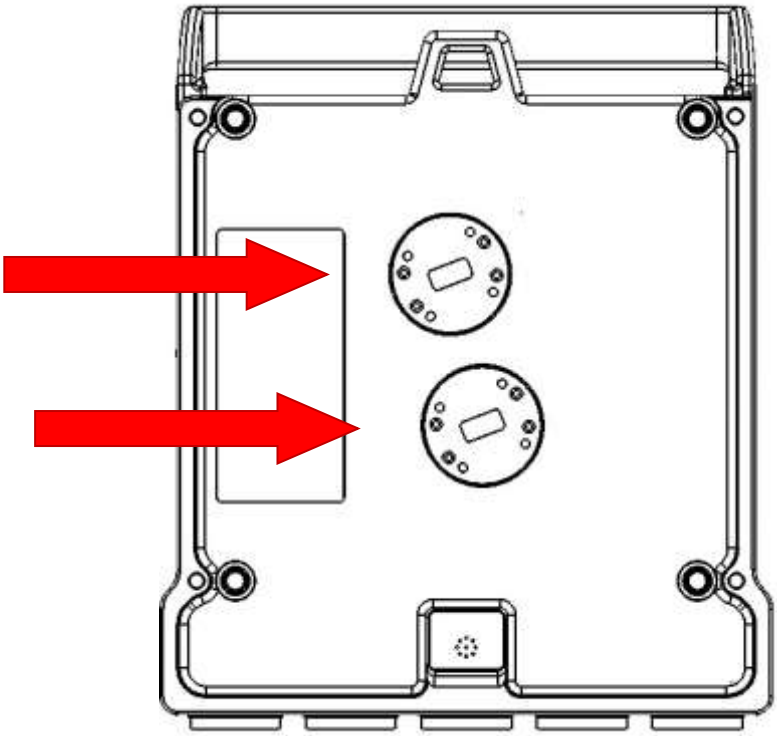

Figure 16: Transparent Pressure Windows

Ceragon Proprietary and Confidential

5.2 Torque Requirements

When tightening the captive screws, use 20 Nm torque for radio-antenna, radio-mediation device, and mediation device-antenna connections. In order to avoid misalignment, screws should be tightened progressively.

When fastening a waveguide to the radio or mediation device, use the following torque, according to screw type:

- M3/#4-40: 1Nm

Ceragon Proprietary and Confidential

5.3 IP-20C DC Pole Mount Procedure

Note! The pole diameter range for pole mount installations is 8.89 cm – 11.43 cm (3.5 inches – 4.5 inches).

List of Items

Item	Description	Quantity	Remarks
1	IP-20C DC POLE MOUNT KIT	1	

Required Tools

- Metric offset wrench key wrench set

To install the IP-20C pole mount:

Mount and tighten the IP-20C DC pole mount to a pole with a diameter of 114 mm using the four washers and screws supplied with the IP-20C DC pole mount kit.

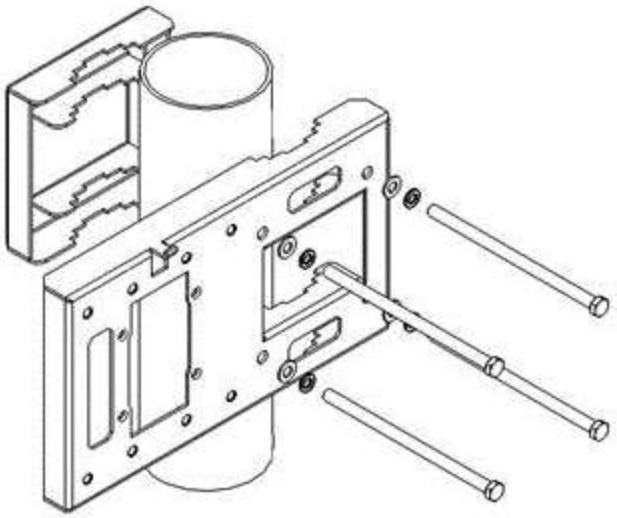

Ceragon Proprietary and Confidential

6. Installation Procedures per Configuration Type

6.1 MultiCore 2+0 Dual Polarization Direct Mount

Note! This procedure can also be used for MultiCore 1+0 DP HW ready for MultiCore 2+0 DP configuration.

CCDP

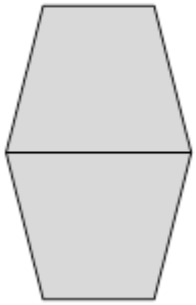

List of Items

Item	Description	Quantity	Remarks
1	IP-20C RADIO	1	
2	IP-20C OMT kit	1	
3	CIRC./CIRC. ADAPTOR	1	Per Antenna Vendor

Required Tools

- Metric offset hexagon key set
- Metric wrench key set

Insertion Loss

Mediation Devices	Signal Path / Remarks	24 GHz
OMT	Each IP-20C antenna port to Mediation device antenna port	0.5

Ceragon Proprietary and Confidential

Procedure

1 Prior to the installation, follow the antenna manufacturer's instructions to use the circular adaptor. (Remove the existing rectangular transition, swap the O-ring, and install the circular transition instead.)

2 Connect the OMT Kit to the antenna and secure it with four screws. Verify the existence of the O-ring.

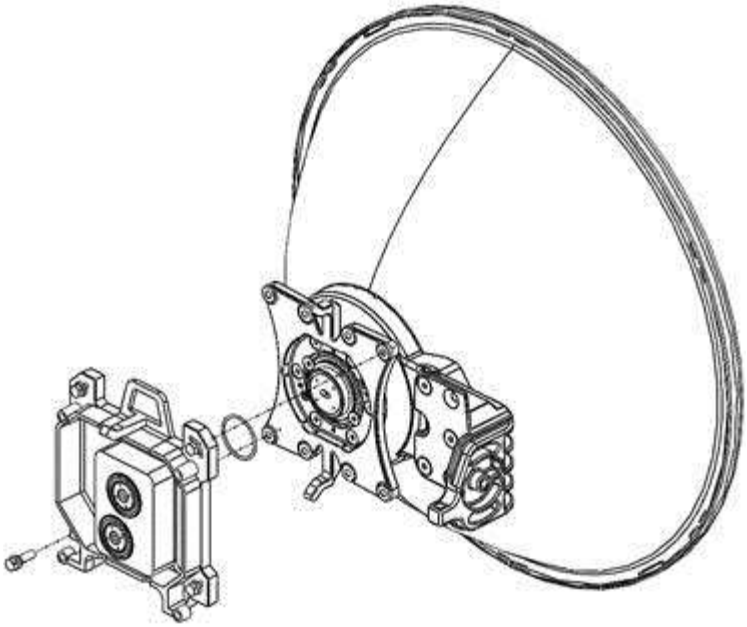

Ceragon Proprietary and Confidential

3 Connect the IP-20C DC radio to the OMT Kit using the four M8 captive screws and washers supplied, and tighten the screws.

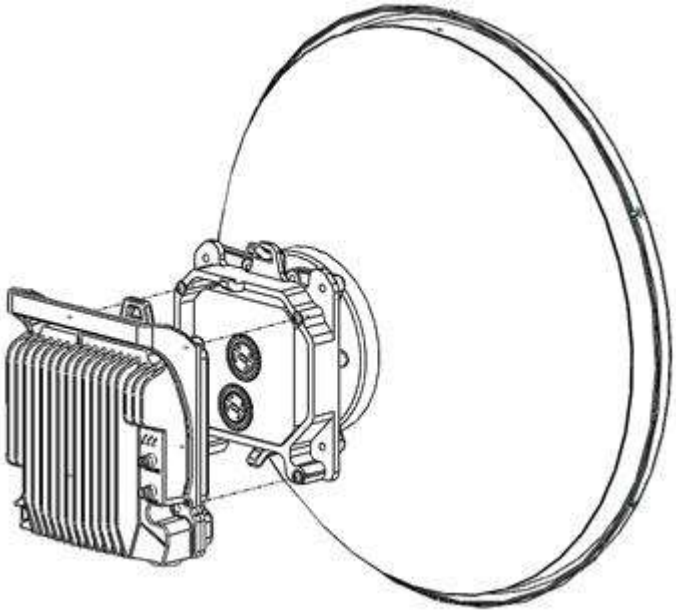

Ceragon Proprietary and Confidential

6.2 MultiCore 2+0 Single Polarization Direct Mount

Note! This procedure can also be used for MultiCore 1+0 SP HW ready for MultiCore 2+0 SP configuration.

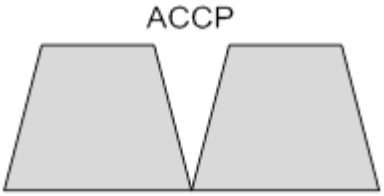

List of Items

Item	Description	Quantity	Remarks
1	IP-20C RADIO	1	
2	IP-20C Splitter KIT	1	

Required Tools

- Metric offset hexagon key set
- Phillips #1, #2 screwdriver

Ceragon Proprietary and Confidential

Insertion Loss

Mediation Devices	Signal Path / Remarks	Insertion Loss [dB] – 24 GHz
Splitter	Radio to antenna port	3.7

Procedure

1 Adjust the twist on the Splitter Kit. Perform one of the following steps, according to the required polarization (horizontal or vertical).

- For horizontal polarization, locate the holes above and below the letter “H” on the pins and fasten the two screws.

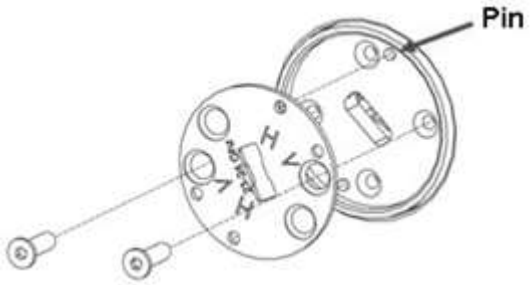

- For vertical polarization, locate the holes above and below the letter “V” on the pins and fasten the two screws.

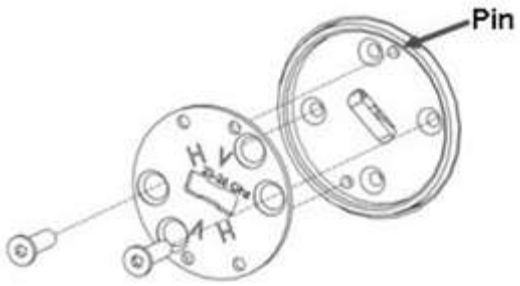

2 Mount and tighten the IP-20C Splitter Kit on the antenna using the four M8 screws and washers.

Ceragon Proprietary and Confidential

3 Mount and tighten the IP-20C to the IP-20C Splitter Kit using the four M8 captive screws and washers supplied.

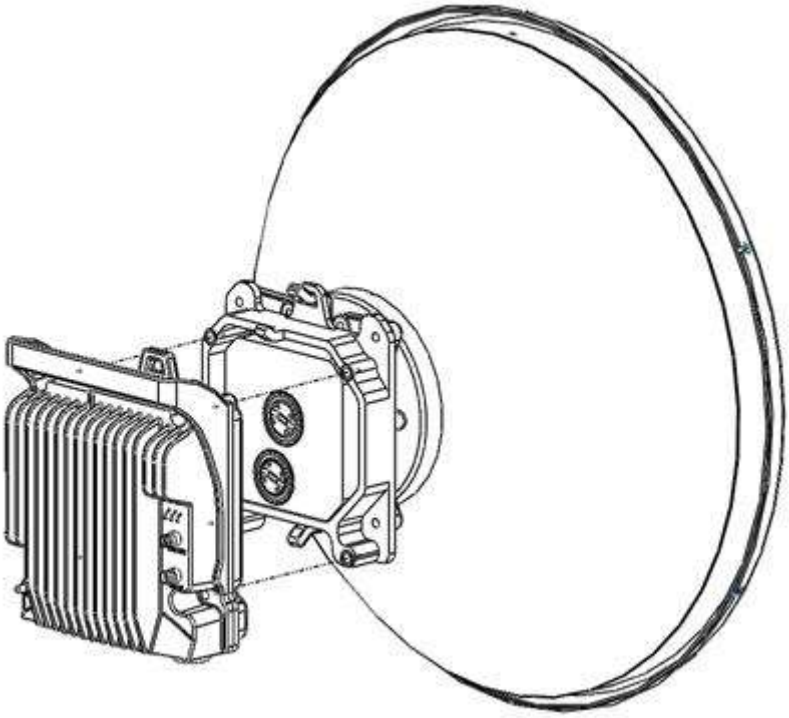

Ceragon Proprietary and Confidential

6.3 AFR 1+0 Hub Site

In an AFR 1+0 configuration, a Multicore FibeAir IP-20C unit is deployed at the hub site and two FibeAir IP-20C or IP-20S units are deployed in two tail sites.

The hub site utilizes a single FibeAir IP-20C unit with two radio carriers. Each carrier is in a link, via its own directional antenna, with a tail site that consists of a FibeAir IP-20C or IP-20S unit.

Note: The links should be located so as to ensure that the two radio paths do not cross.

The tail site unit is installed as a simple 1+0 configuration.

The hub site unit is installed as a remote mount configuration in which two flexible waveguides are used to connect the two Remote Mount Adaptor ports to an antenna. This chapter describes a hub site installation.

For standard interface antennas (six feet and larger), no OMT and no Circ./Circ. Adaptor are used, and the flexible waveguides are connected directly to the antenna flanges. For instructions how to connect the waveguides to the antenna flanges, refer to the antenna vendor's documentation.

List of Items

Item	Description	Quantity	Remarks
1	IP-20C RADIO	1	
3	FLEXIBLE WG KIT	2	
4	IP-20C DC POLE MOUNT KIT	1	
5	Circ./Circ. Adaptor	1	Per Antenna Vendor. Not used for standard interface antennas (six feet and larger).

Required Tools

- Metric offset hexagon key set
- Metric wrench key set
- Phillips #1, #2 screwdriver

Insertion Loss

Mediation Devices	Signal Path / Remarks	Insertion Loss [dB] – 24 GHz
Flex WG (1m)	Each IP-20C port to antenna port	2.7

Ceragon Proprietary and Confidential

6.3.1 Procedure

1 Prior to the installation, follow the antenna manufacturer's instructions to use the circular adaptor. (Remove the existing rectangular transition, swap the O-ring, and install the circular transition instead.)

2 Mount and tighten the Flexible WG to the antenna port using the four screws supplied with the Flexible WG kit.

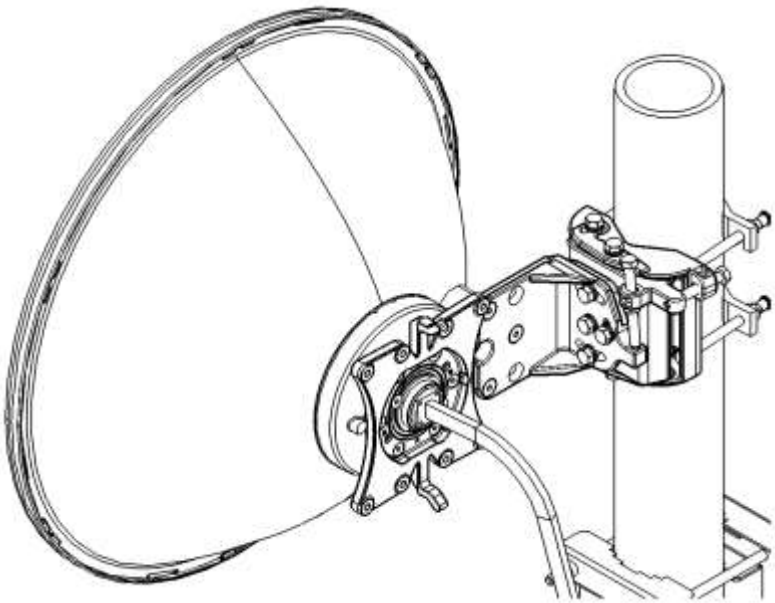

Ceragon Proprietary and Confidential

3 Mount and tighten the IP-20C to the IP-20C DC Pole Mount using the four screws assembled on the IP-20C.

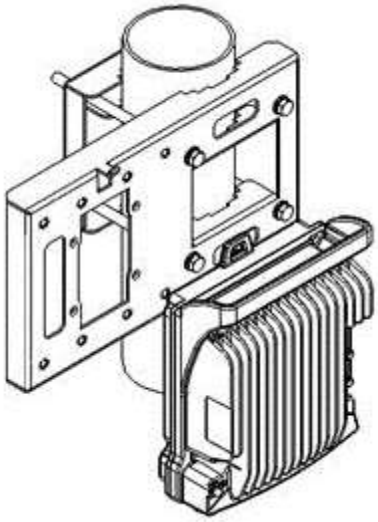

4 Mount and tighten the O-ring and the Flexible WG to IP-20C radio ports using the four screws supplied with the Flexible WG kit.

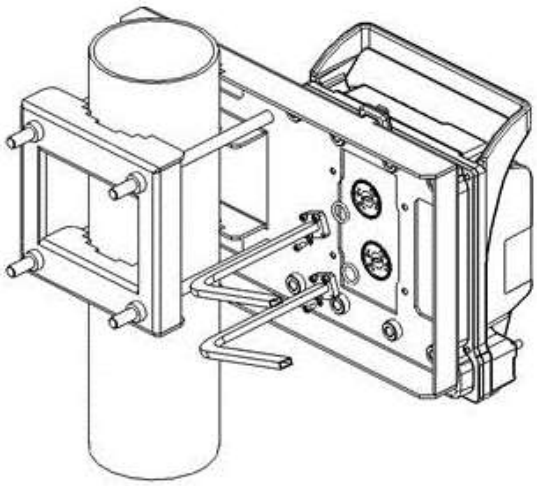

The following figure shows the complete installation.

Note:	This figure shows an installation with horizontal polarization. Vertical polarization can also be used. The same polarization must be used for both links.

Ceragon Proprietary and Confidential

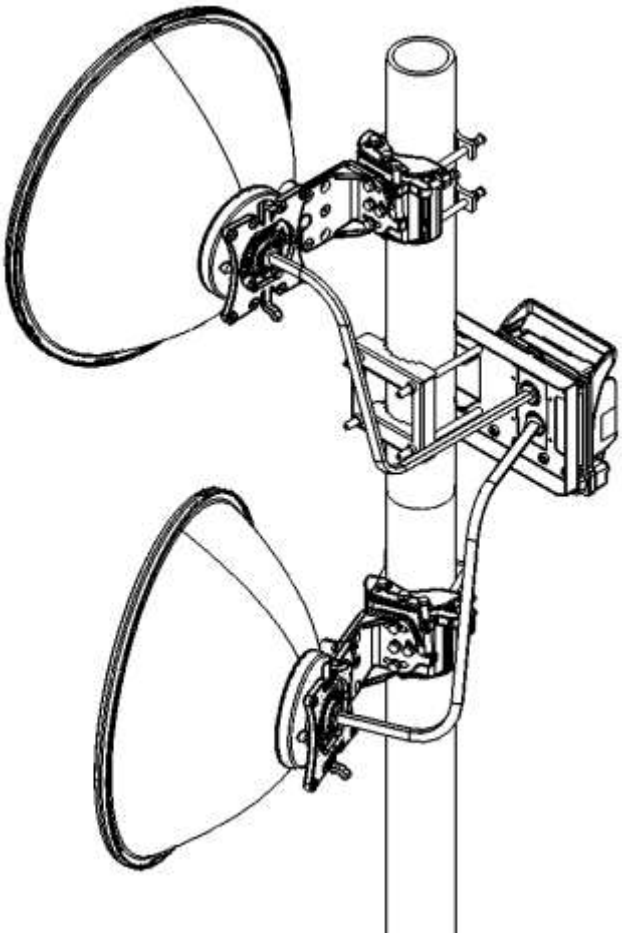

Ceragon Proprietary and Confidential

7. Antenna Installation Instructions

Note! Appropriate lubricant or grease can be applied to the screws that connect the IP-20C to the antenna interface.

7.1 Installation Instructions for 1 ft Antenna

List of Items

Item	Description	Quantity	Remarks
A	Antenna (with preassembled feeder)	1	
B	Antenna support (Box) (not preassembled)	1	
	Pipe attachment bracket	1	
	Clamp bracket	1	
	Pivot bracket	1	
	M8 link screw (and M8 nut)	1	
	M8x100 screw	3	
	M8x35 screw	1	
	M8x25 screw	3	
	Washer M8	9	
	M8 nut	6	
C	Radio interface (not preassembled)	1	
	Interface plate	1	
	Adapter plate	1	
	Securing hook	1	
	M10x25 screw	4	
	M6x18 screw (countersunk)	2	
	M4x10 screw	1	
	Washer M10	4	
D	Grease (not preassembled)	1	

Ceragon Proprietary and Confidential

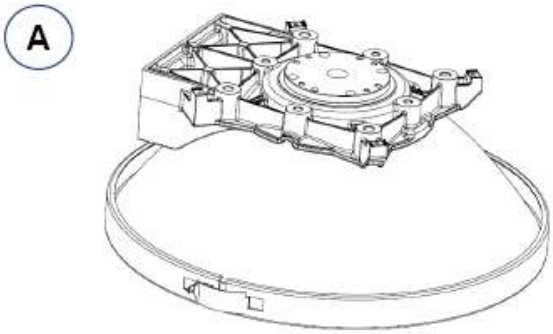

(With Preassembled Feeder)

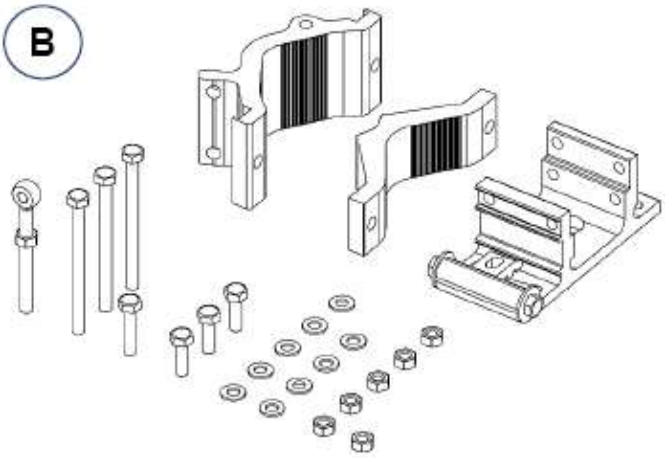

(Not Preassembled)

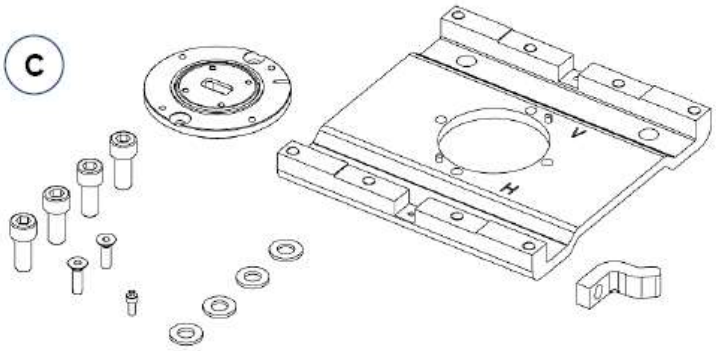

(Not Preassembled)

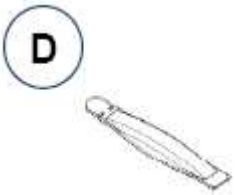

Ceragon Proprietary and Confidential

Required Tools

Required Tool	Head Size	Thread Size	Torque Nm
Allen Key	3 mm	M4	2.6
Allen Key	4 mm	M6	9.1
Allen Key	8 mm	M10	33
Combination Wrench (ring/open jaw)	13 mm	M8	24/32
Socket wrench and sockets	13 mm	M8	24/32
Tool for torque levels 2.6 Nm – 33 Nm			

Unpacking

Before starting with the installation, make sure to remove any protection tapes covering the waveguide openings.

Please the antenna on a flat, clean surface, such as the top of the packing material.

Handle the Feeder carefully at all times.

7.2 Antenna Assembly Procedure

Step 1 – Left or right side installation

Before proceeding with the installation, you must determine whether a left or right side installation is required.

For a right side installation, see Step 2.1 – Antenna support (right side installation).

For a left side installation, see Step 2.2 – Antenna support (left side installation).

Ceragon Proprietary and Confidential

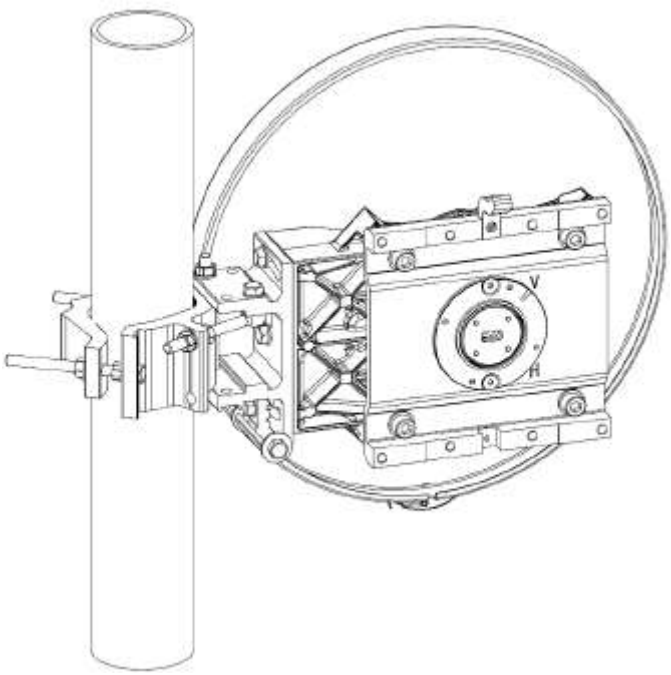

Figure 17: Right Side Antenna Installation

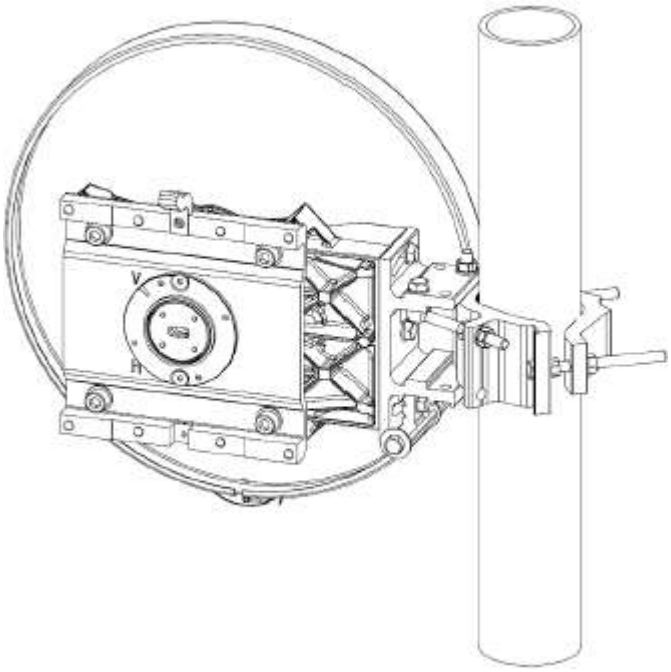

Figure 18: Left Side Antenna Installation

<u>Step 2.1 – Antenna support (right side installation).</u>

a) Mount the pivot bracket (1) to the antenna (2) using 1 M8x35 screw and 1 M8 washer (3) and 2 M8x25 screws with 2 M8 washers (4). Fit the screws finger tight.

b) Mount 1 M8 link screw (5) to the pivot bracket (1) using 1 M8x25 screw with 1 M8 washer (6). Fit the screw loosely.

c) Mount 2 M8x100 screws (7) to the pipe attachment bracket (8) using 2 M8 nuts (9). Tighten the nuts finger tight.

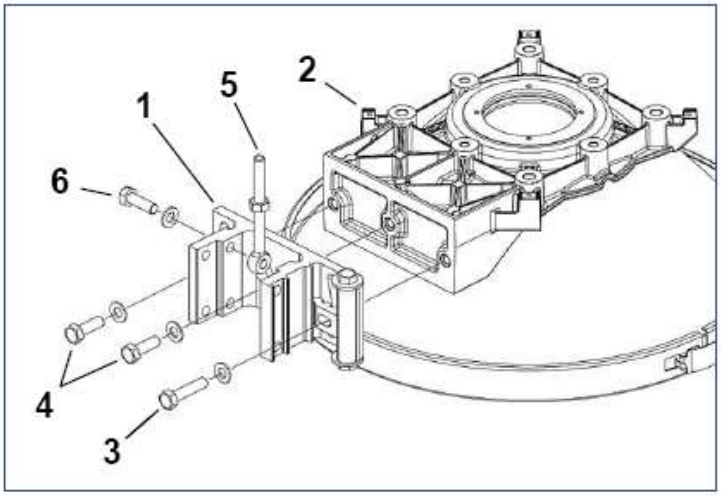

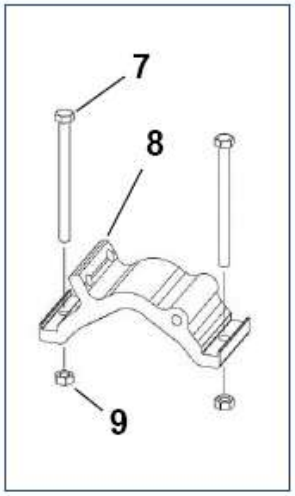

Ceragon Proprietary and Confidential

d) Mount the pipe attachment bracket (8) to the pivot bracket (1) using 1 M8x100 screw (10) and 2 M8 nuts with 3 M8 washers (11). Fit the screw and nuts loosely.

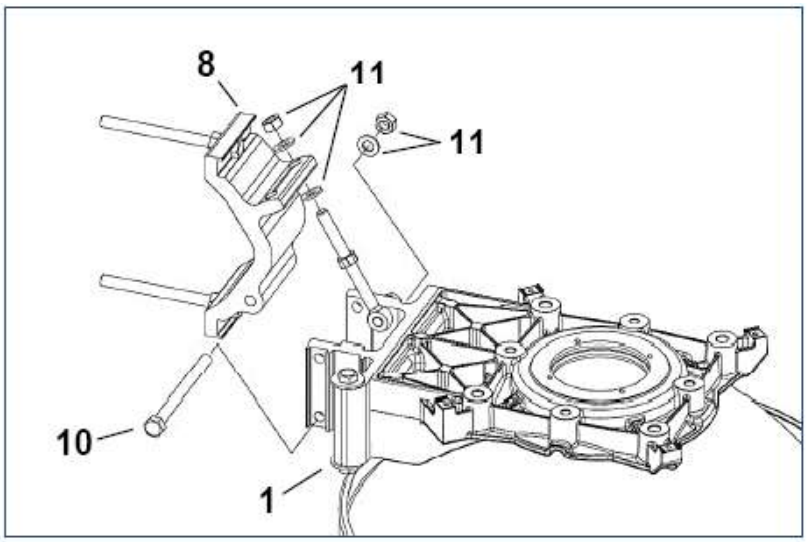

Step 2.2 – Antenna support (left side installation).

a) Mount the pivot bracket (1) to the antenna (2) using 1 M8x35 screw with 1 M8 washer (3) and 2 M8x25 screws with 2 M8 washers (4). Fit the screws finger tight.

b) Mount 1 M8 link screw (5) to a pivot bracket (1) using 1 M8x25 screw with 1 M8 washer (6). Fit the screw loosely.

c) Mount 2 M8x100 screws (7) to the pipe attachment bracket (8) using 2 M8 nuts (9). Tighten the nuts finger tight.

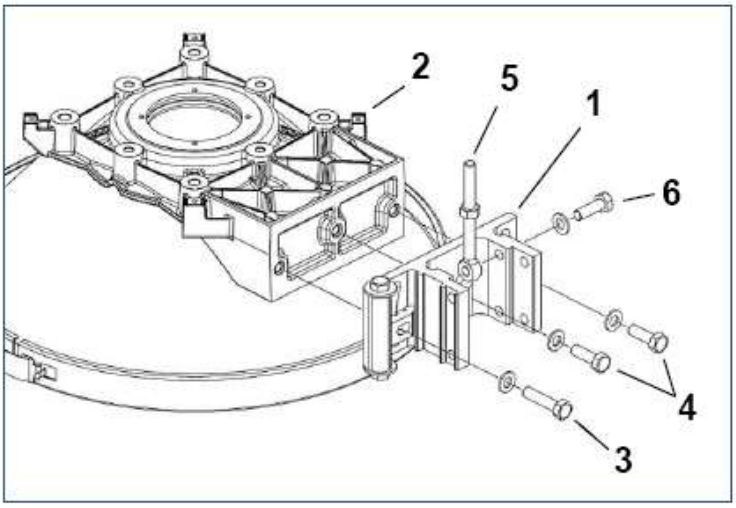

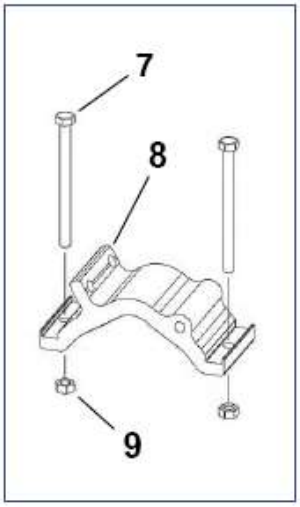

d) Mount the pipe attachment bracket (8) to the pivot bracket (1) using 1 M8x100 screw (10) and 2 M8 nuts with 3 M8 washers (11). Fit the screw and nuts loosely.

Ceragon Proprietary and Confidential

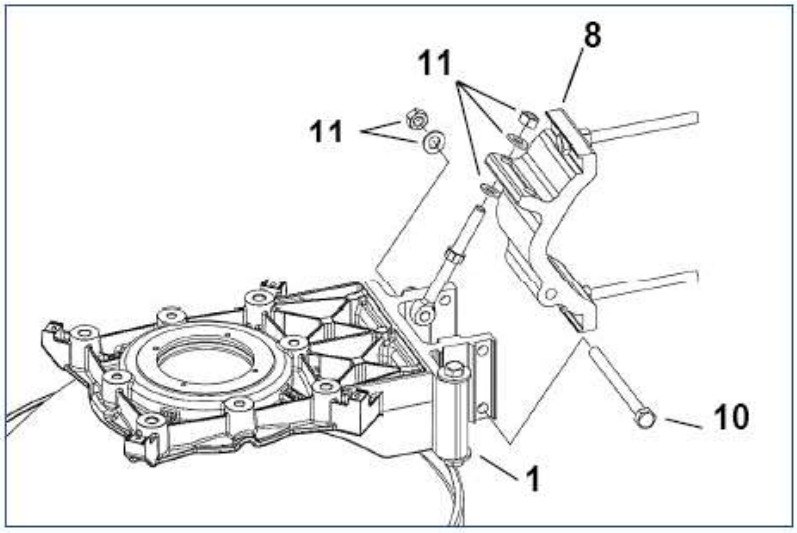

Step 3 – Adapter Plate.

If the adapter plate (2) is already mounted, skip Step 3 and go directly to Step 4.

a) Mount the adapter plate (2) onto the antenna (1) using 4 M10x25 screws with 4 M10 washers (3). First make sure that the adapter plate guide pins are properly inserted into the feeder (4), then tighten the screws with torque of 33Nm ± 5%.

b) Mount the securing hook (5) to the adapter plate (2) using 1 M4x10 screw (6). The securing hook can be mounted in two positions. Choose the position that will be pointing upward when the antenna installation has been completed. Tighten the screw with torque of 2.6Nm ± 5%.

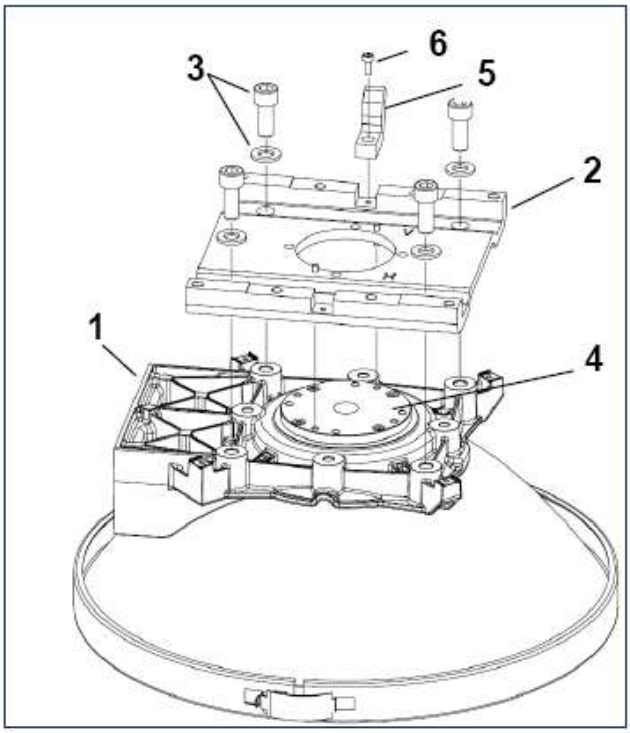

Ceragon Proprietary and Confidential

Step 4 – Interface Plate.

If the Interface plate (1) is already mounted, skip Step 4 and go directly to Step 5.

a) Mount the interface plate (1) to the adapter plate (2) using 2 M6x18 screws (3). Tighten the screws with torque of 9.1Nm ± 5%.

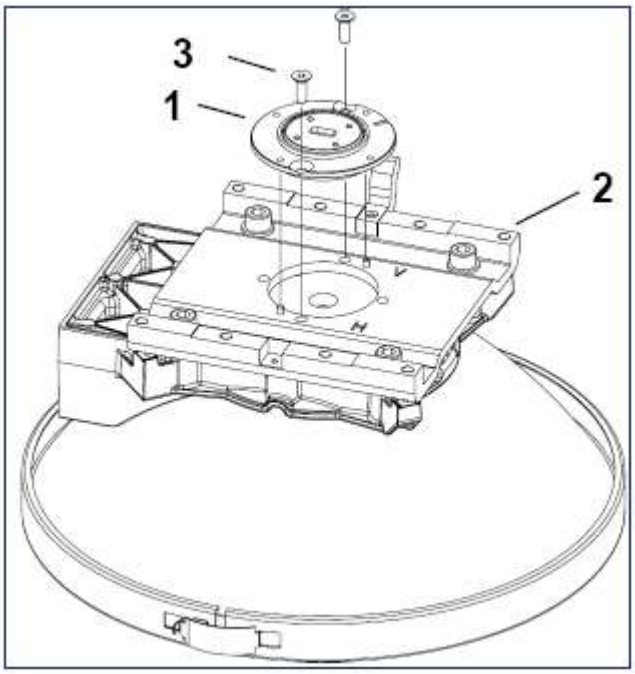

Step 5 – Selecting Polarization.

Single Polarization: For interface plates (1) with a rectangular interface, it is possible to choose between vertical polarization ("V") and Horizontal polarization ("H"), see Step 5a-5b.

Dual Polarization: For interface plates (1) with a circular interface there is no need to adjust polarization on the antenna, skip Step 5 and go directly to Step 6.

a) If the required polarization is not correct after step 4, loosen 2 M6x18 screws (3) and adjust the polarization by lifting and rotating the interface plate (1) 90°. Align the mark on the interface plate (1) with the required polarization mark ("V" or "H") on the adapter plate (2).

b) After adjusting the polarization, reassemble and tighten the screws with torque of 9.1 Nm ± 5%.

Ceragon Proprietary and Confidential

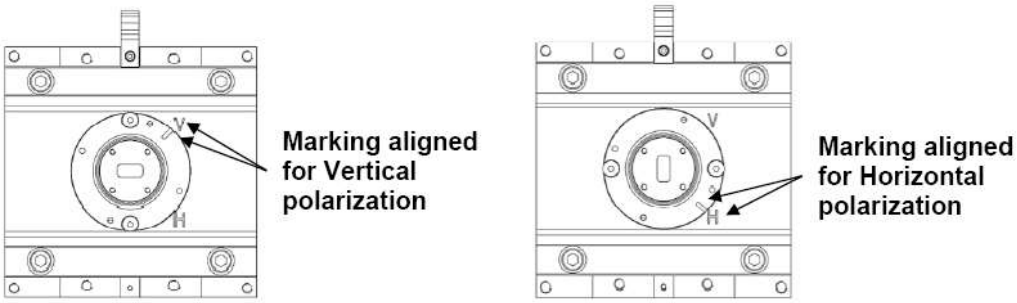

Step 6 – Apply Extra Grease.

For heavier radio equipment it is recommended to add extra grease to the antenna support, to reduce friction.

a) Apply a layer of grease onto surfaces A and B on Pivot bracket (1).

b) Apply grease onto the thread of the elevation screw (2).

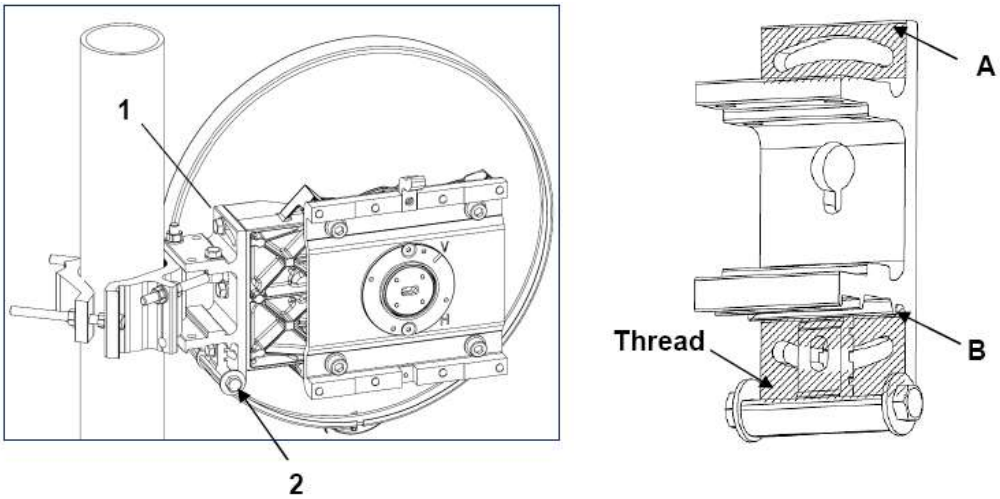

7.3 Antenna Installation Procedure

Tower pipe compatibility: Ø50- Ø120.

The following steps and figures describe a right side installation. See "Assembly: Step 1 – Left or right side installation".

a) Hoist and secure the antenna to the pipe using 1 clamp bracket (1) and 2 M8 nuts and 2 M8 washers (2). Rotate the clamp bracket depending on the pipe's diameter.

b) Position the antenna so it will point along the radio link path and then tighten the nuts (3) with torque of 24 Nm ± 5% and nuts (2) with torque of either 24 Nm ± 5% if the pipe is ø66-120mm or 32Nm ± 5% if the pipe is ø50-66mm.

Ceragon Proprietary and Confidential

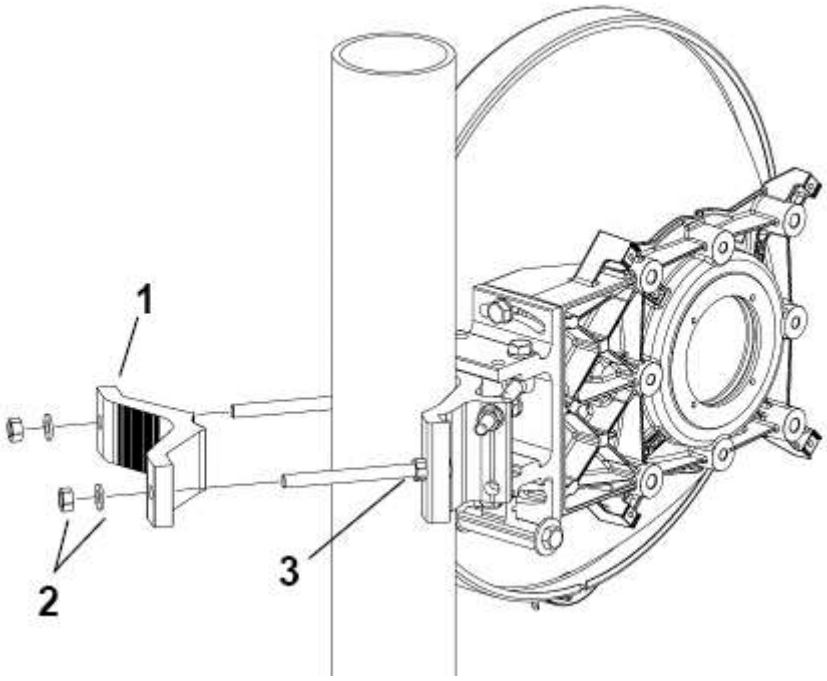

Figure 19: Clamp orientation for pipes Ø50-66mm (32Nm)

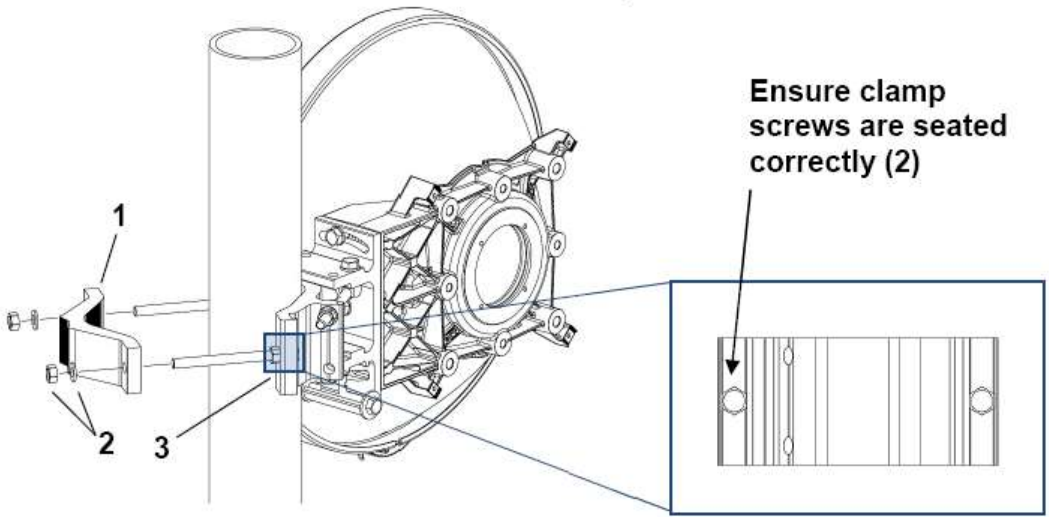

Figure 20: Clamp orientation for pipes Ø66-120mm (24Nm)

Ceragon Proprietary and Confidential

7.4 Antenna Alignment Procedure

7.4.1 Elevation Adjustment

a) Ensure that the 3 M8 screws (1) are slightly loose.

b) Rotate the elevation screw to adjust the direction ± 15°.

c) On completion, tighten the screws (1) with torque of 24 Nm ± 5%.

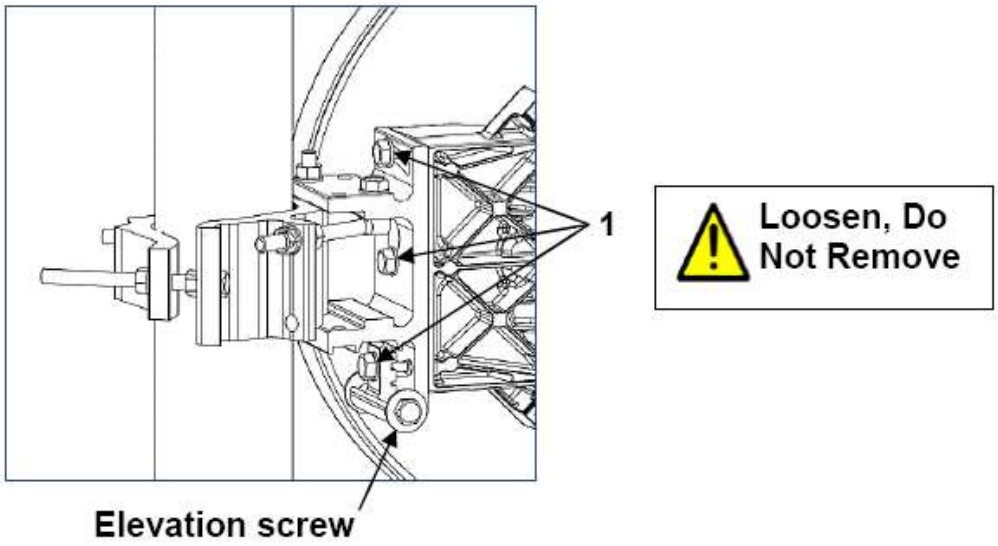

7.4.2 Azimuth Adjustment

a) Ensure that the 3 M8 nuts (2) (3) and 1 M8 screw (4) are slightly loose.

b) Move the M8 nuts (2) along the Azimuth screw to adjust the direction ± 15°.

c) On completion, tighten the nuts (2) (3) and screw (4) with torque of 24 Nm ± 5%.

Ceragon Proprietary and Confidential

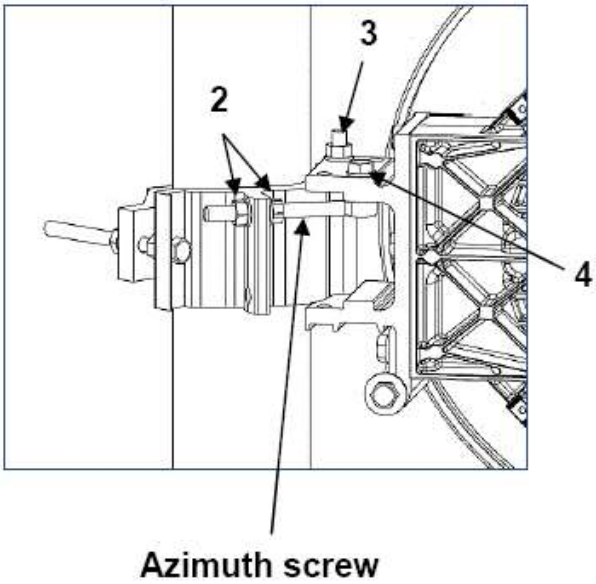

Ceragon Proprietary and Confidential

7.5 Installation Instructions for 2 ft Antenna

List of Items

Item	Description	Quantity	Remarks
A	Antenna	1	
B	Antenna support (Box) (not preassembled)	1	
	Pipe attachment bracket	1	
	Clamp bracket	1	
	Pivot bracket	1	
	M8 link screw (and M8 nut)	1	
	M8x100 screw	3	
	M8x35 screw	1	
	M8x25 screw	3	
	Washer M8	9	
	M8 nut	6	
C	Feeder kit	1	
	Feeder	1	
	M4x10 screw	4	
D	Radio interface (not preassembled)	1	
	Interface plate	1	
	Adapter plate	1	
	Securing hook	1	
	M10x25 screw	4	
	M6x18 screw (countersunk)	2	
	M4x10 screw	1	
	Washer M10	4	
E	Grease (not preassembled)	1	

Ceragon Proprietary and Confidential

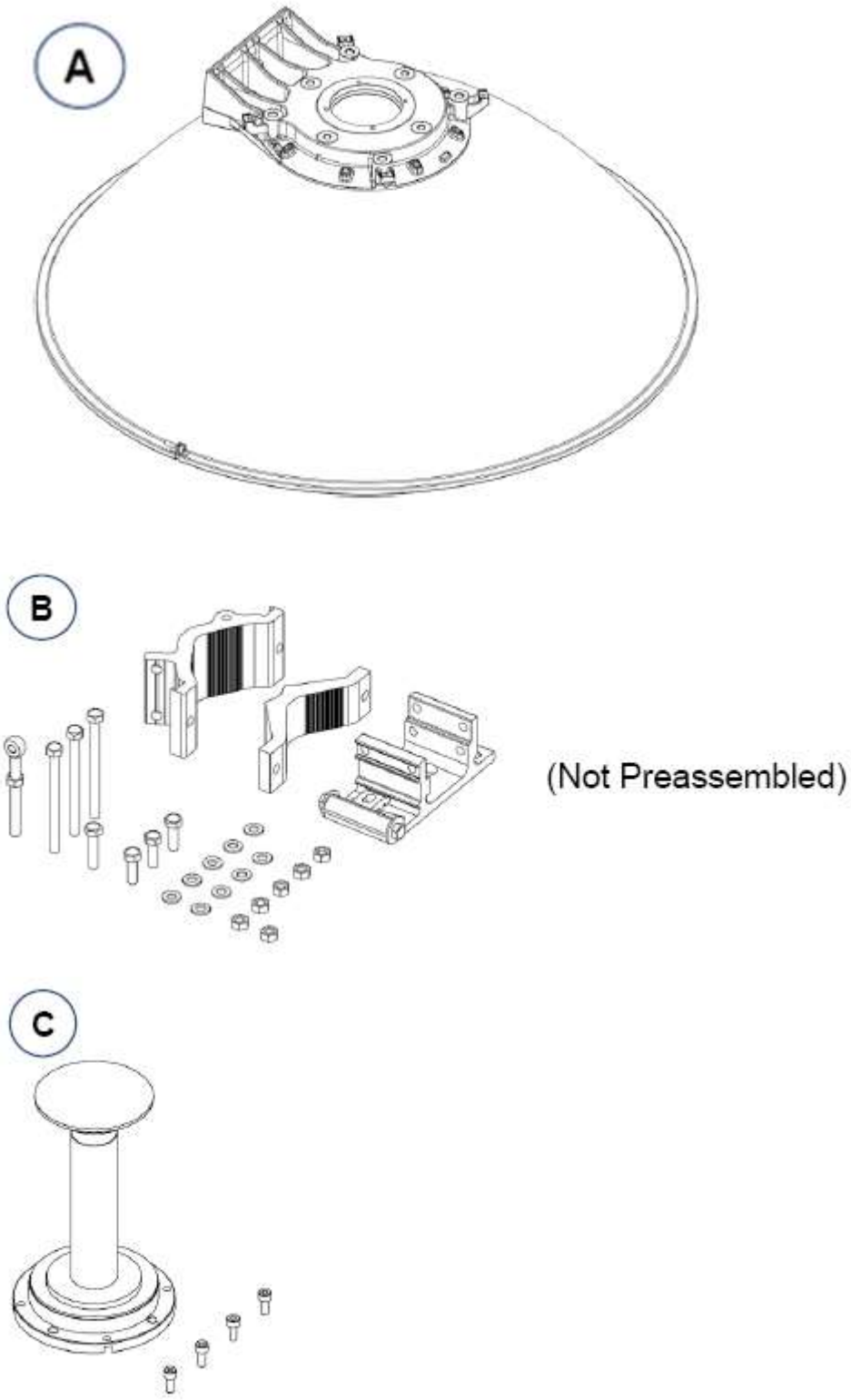

Ceragon Proprietary and Confidential

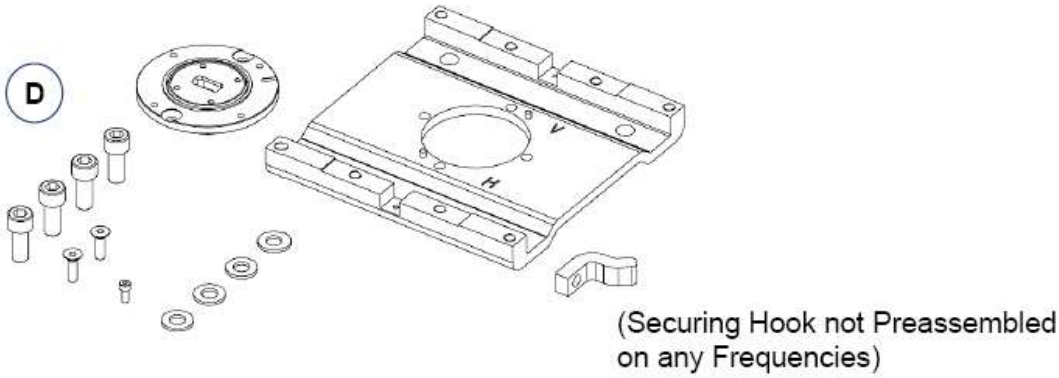

Required Tools

Required Tool	Head Size	Thread Size	Torque Nm
Allen Key	3 mm	M4	2.6
Allen Key	4 mm	M6	9.1
Allen Key	8 mm	M10	33
Combination Wrench (ring/open jaw)	13 mm	M8	24/32
Socket wrench and sockets	13 mm	M8	24/32
Tool for torque levels 2.6 Nm – 33 Nm			

Unpacking

If the feeder is not pre-installed, remove it from its packaging carefully. Avoid any contact with the top of the feeder. Before starting with the installation, make sure to remove any protection tapes covering the waveguide openings.

Please the antenna on a flat, clean surface, such as the top of the packing material.

Handle the Feeder carefully at all times.

Ceragon Proprietary and Confidential

7.6 Antenna Assembly Procedure

Step 1 – Radome

a) Detach the spherical radome (1) from the reflector (2) by unscrewing 1 M4 screw and 1 square nut (3).

b) Dismount the edge ring (4) and turn the spherical radome (1) 180°.

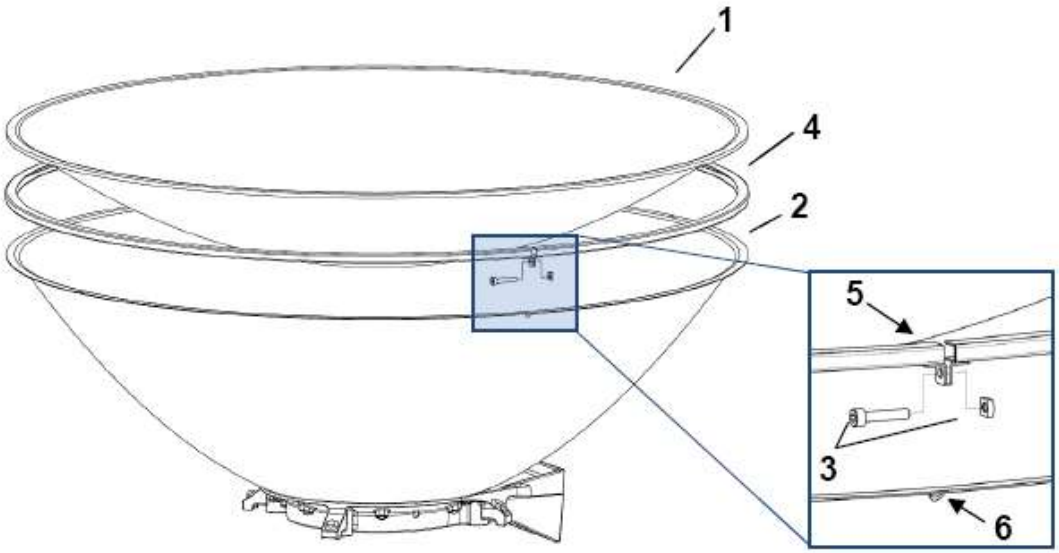

c) Reattach the spherical radome (1) and edge ring (4) to the reflector (2) using the same M4 screw and square nut (3).

d) Align the opening of the edge ring (5) to one of the two drain holes in the reflector (6), depending on whether a left or right side installation is required. The opening of the edge ring (5) should be facing downward after installation has been completed. (See “Assembly: Step 2 - Left or right side installation”).

e) Tighten the screw with torque of 2.6Nm ± 5%.

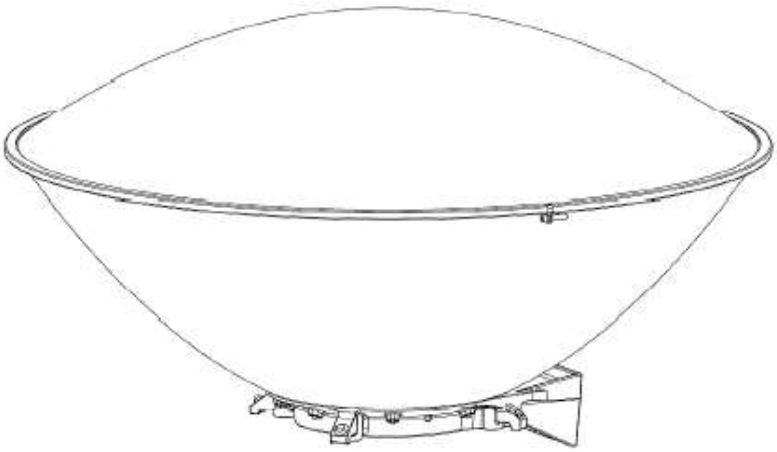

Ceragon Proprietary and Confidential

Step 2 – Left or right side installation

Before proceeding with the installation, you must determine whether a left or right side installation is required.

For a right side installation, see Step 3.1 – Antenna support (right side installation).

For a left side installation, see Step 3.2 – Antenna support (left side installation).

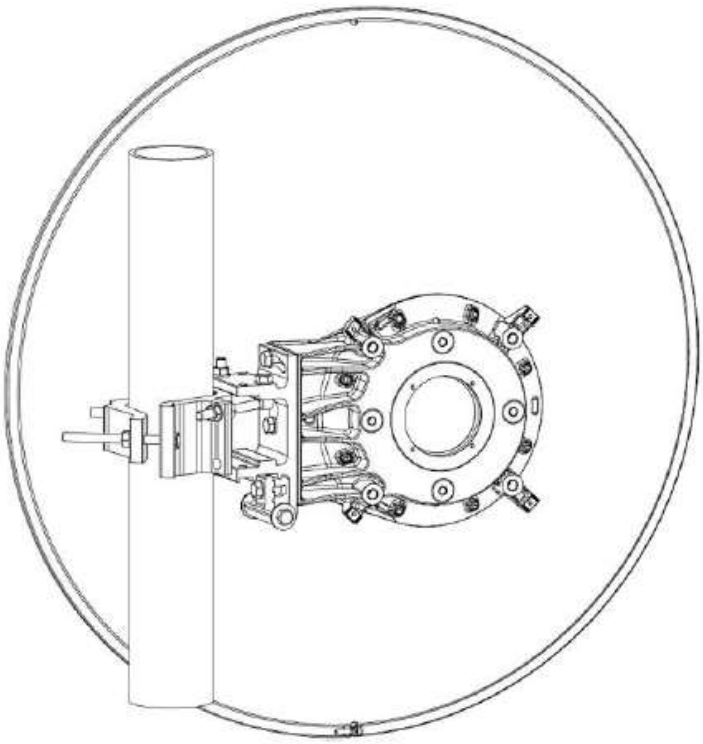

Figure 21: Right Side Antenna Installation

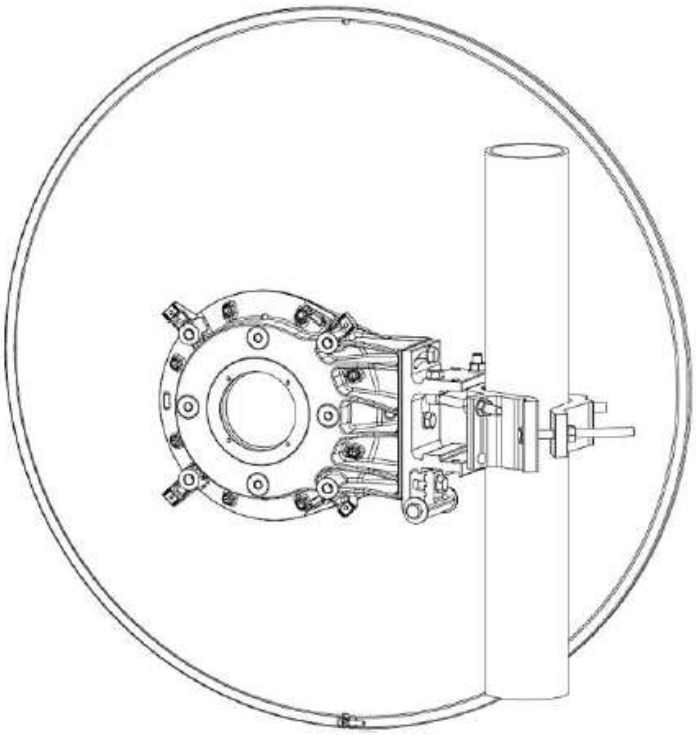

Figure 22: Left Side Antenna Installation

Step 3.1 – Antenna support (right side installation).

a) Mount the pivot bracket (1) to the antenna (2) using 1 M8x35 screw and 1 M8 washer (3) and 2 M8x25 screws with 2 M8 washers (4). Fit the screws finger tight.

b) Mount 1 M8 link screw (5) to the pivot bracket (1) using 1 M8x25 screw with 1 M8 washer (6). Fit the screw loosely.

c) Mount 2 M8x100 screws (7) to the pipe attachment bracket (8) using 2 M8 nuts (9). Tighten the nuts finger tight.

Ceragon Proprietary and Confidential

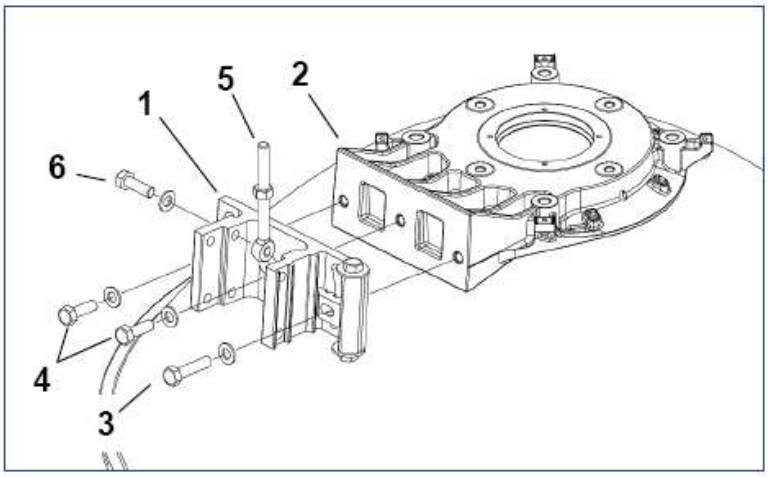

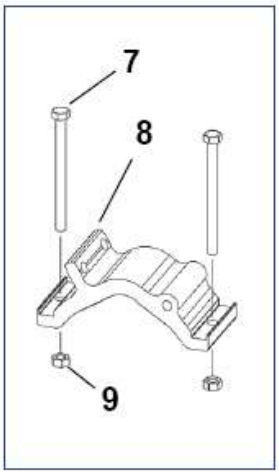

d) Mount the pipe attachment bracket (8) to the pivot bracket (1) using 1 M8x100 screw (10) and 2 M8 nuts with 3 M8 washers (11). Fit the screw and nuts loosely.

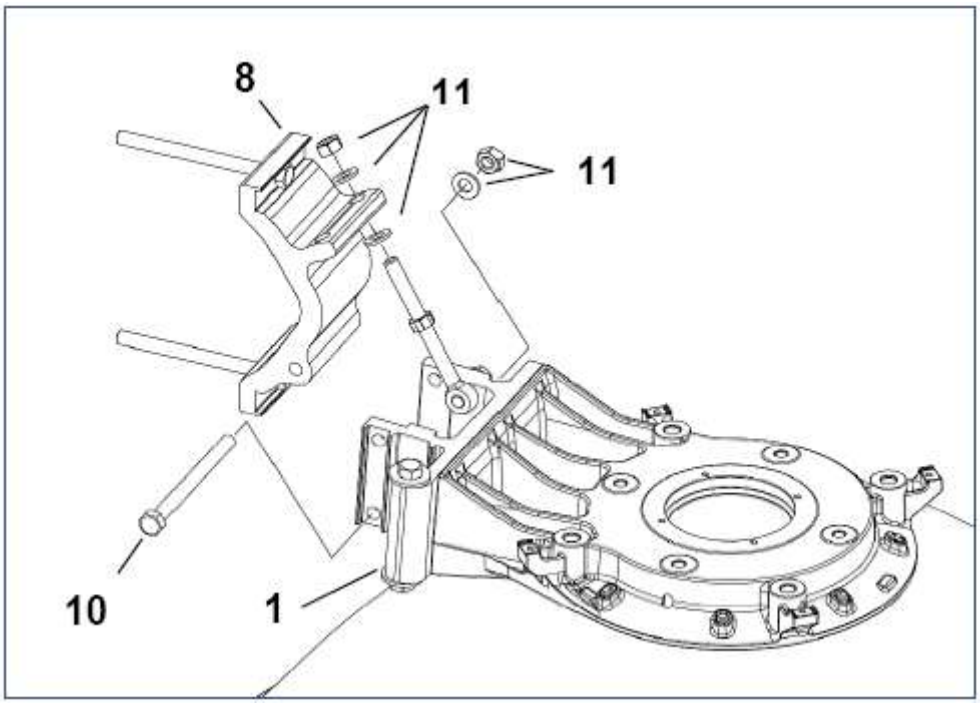

Ceragon Proprietary and Confidential

Step 3.2 – Antenna support (left side installation).

a) Mount the pivot bracket (1) to the antenna (2) using 1 M8x35 screw with 1 M8 washer (3) and 2 M8x25 screws with 2 M8 washers (4). Fit the screws finger tight.

b) Mount 1 M8 link screw (5) to a pivot bracket (1) using 1 M8x25 screw with 1 M8 washer (6). Fit the screw loosely.

c) Mount 2 M8x100 screws (7) to the pipe attachment bracket (8) using 2 M8 nuts (9). Tighten the nuts finger tight.

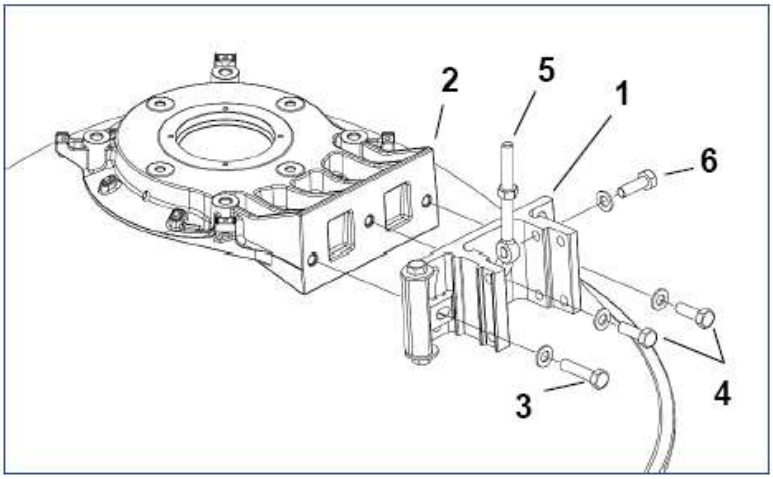

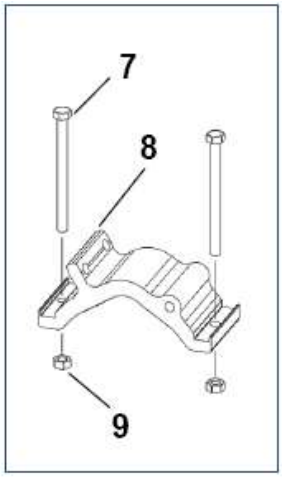

d) Mount the pipe attachment bracket (8) to the pivot bracket (1) using 1 M8x100 screw (10) and 2 M8 nuts with 3 M8 washers (11). Fit the screw and nuts loosely.

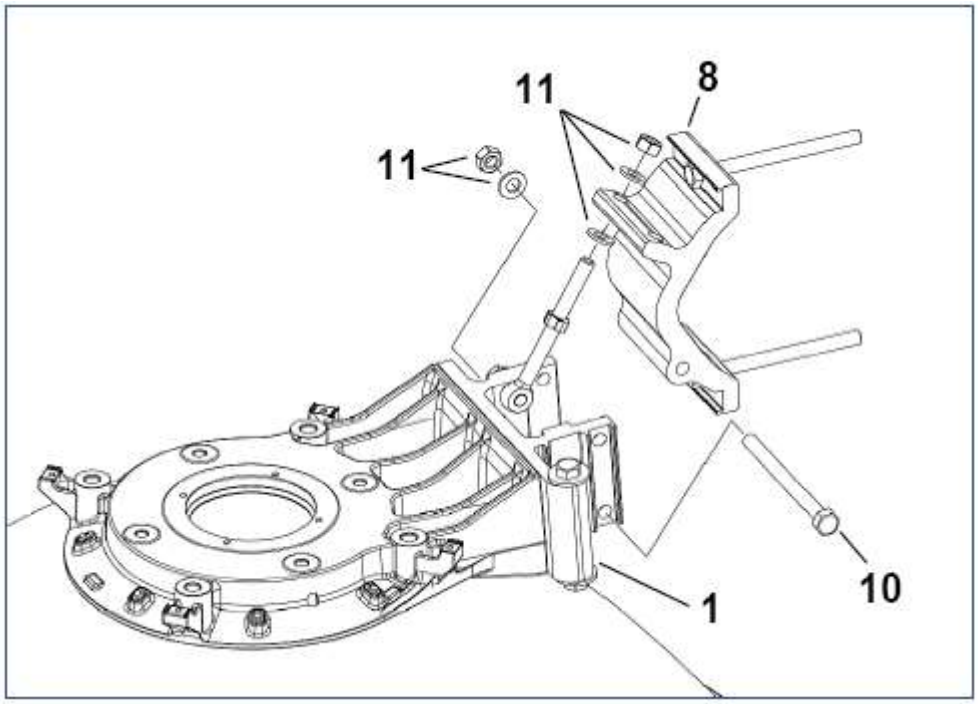

Ceragon Proprietary and Confidential

Step 4 – Feeder.

a) If the feeder (1) and interface plate (2) are already mounted (24-42GHz), remove the interface plate (2) from the feeder by removing the 2 M6 screws (3).

b) Insert the feeder (1) into the antenna (4) using 4 M4x10 screws (5). Tighten the screws with torque of 2.6Nm ± 5%.

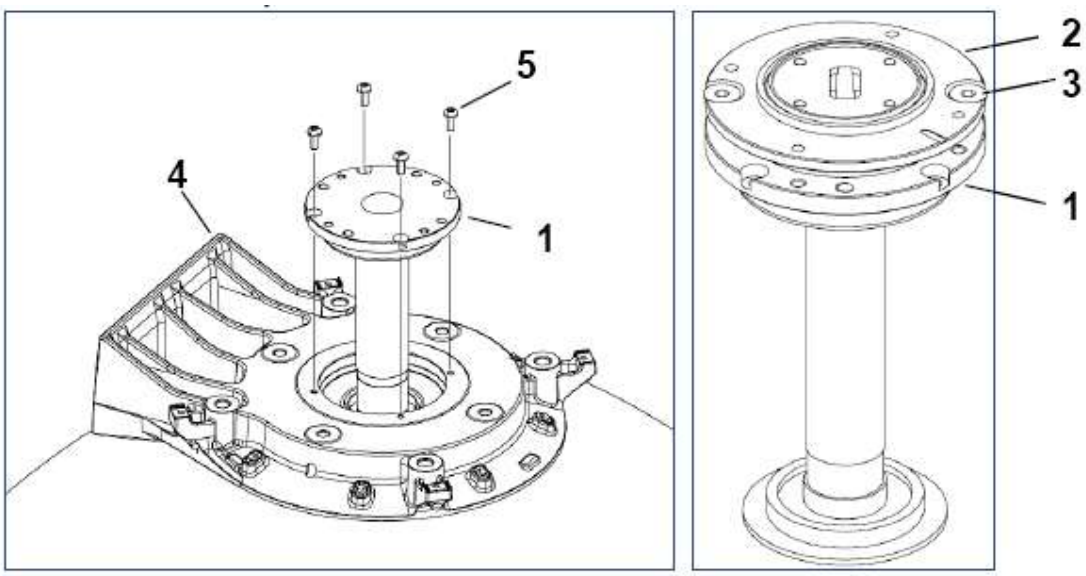

Ceragon Proprietary and Confidential

Step 5 – Adapter Plate.

a) Mount the adapter plate (2) onto the antenna (1) using 4 M10x25 screws with 4 M10 washers (3). First make sure that the adapter plate guide pins are properly inserted into the feeder (4), then tighten the screws with torque of 33Nm ± 5%.

b) Mount the securing hook (5) to the adapter plate (2) using 1 M4x10 screw (6). The securing hook can be mounted in two positions. Choose the position that will be pointing upward when the antenna installation has been completed. Tighten the screw with torque of 2.6Nm ± 5%.

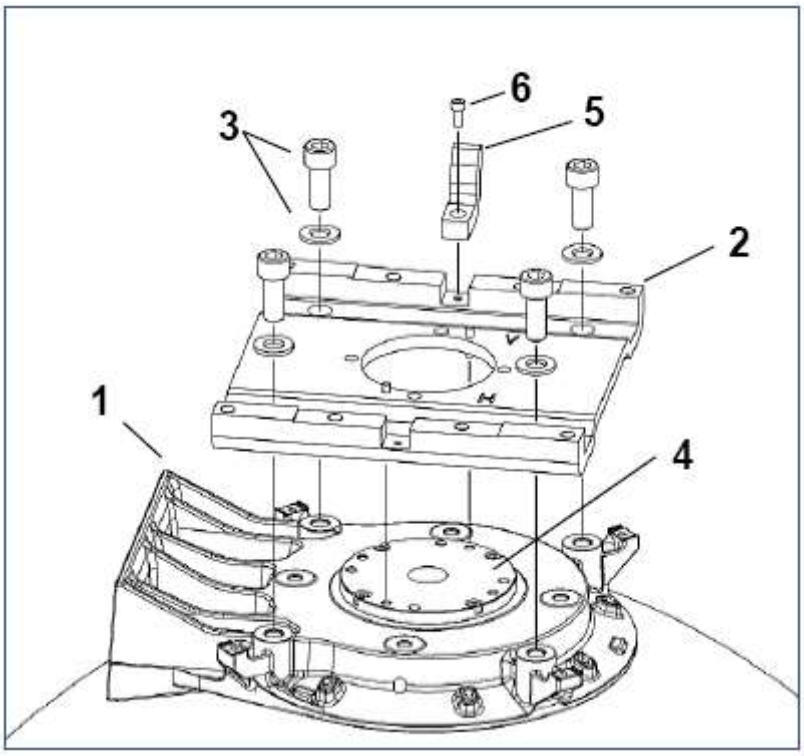

Ceragon Proprietary and Confidential

Step 6 – Interface Plate.

a) Mount the interface plate (1) to the adapter plate (2) using 2 M6x18 screws (3). Tighten the screws with torque of 9.1Nm ± 5%.

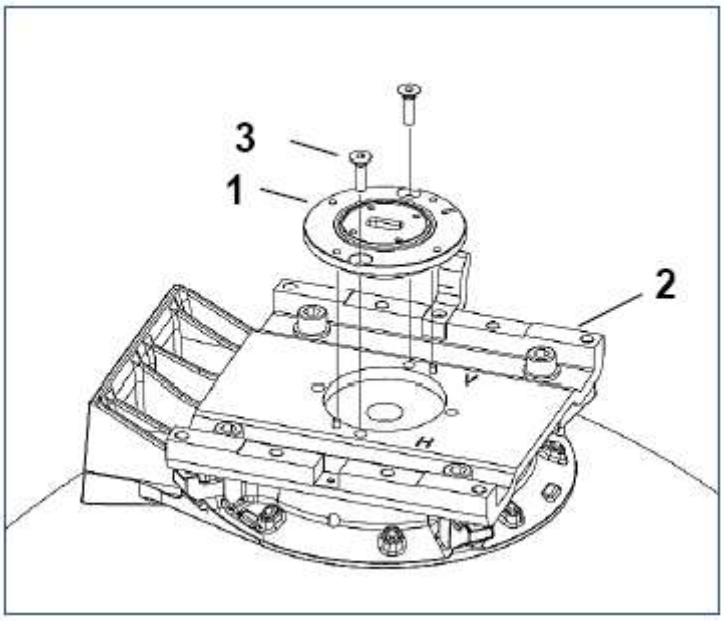

Step 7 – Selecting Polarization.

Single Polarization: For interface plates (1) with a rectangular interface, it is possible to choose between vertical polarization ("V") and Horizontal polarization ("H"), see Step 7a-7b.

Dual Polarization: For interface plates (1) with a circular interface there is no need to adjust polarization on the antenna, skip Step 7 and go directly to Step 8.

a) If the required polarization is not correct after step 6, loosen 2 M6x18 screws (3) and adjust the polarization by lifting and rotating the interface plate (1) 90°. Align the mark on the interface plate (1) with the required polarization mark ("V" or "H") on the adapter plate (2).

b) After adjusting the polarization, reassemble and tighten the screws with torque of 9.1 Nm ± 5%.

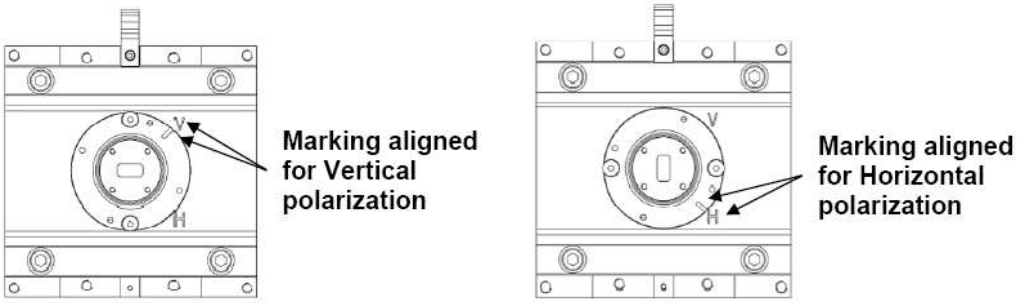

Ceragon Proprietary and Confidential

Step 8 – Apply Extra Grease.

For heavier radio equipment it is recommended to add extra grease to the antenna support, to reduce friction.

a) Apply a layer of grease onto surfaces A and B on Pivot bracket (1).

b) Apply grease onto the thread of the elevation screw (2).

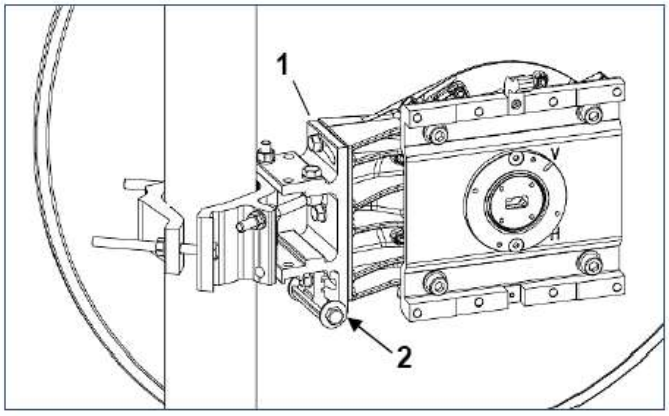

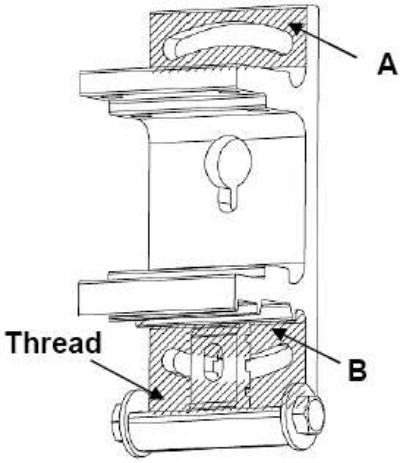

7.7 Antenna Installation Procedure

Tower pipe compatibility: Ø50- Ø120.

The following steps and figures describe a right side installation. See "Assembly: Step 2 – Left or right side installation".

a) Hoist and secure the antenna to the pipe using 1 clamp bracket (1) and 2 M8 nuts and 2 M8 washers (2). Rotate the clamp bracket depending on the pipe's diameter.

b) Position the antenna so it will point along the radio link path and then tighten the nuts (3) with torque of 24 Nm ± 5% and nuts (2) with torque of either 24 Nm ± 5% if the pipe is ø66-120mm or 32Nm ± 5% if the pipe is ø50-66mm.

Ceragon Proprietary and Confidential

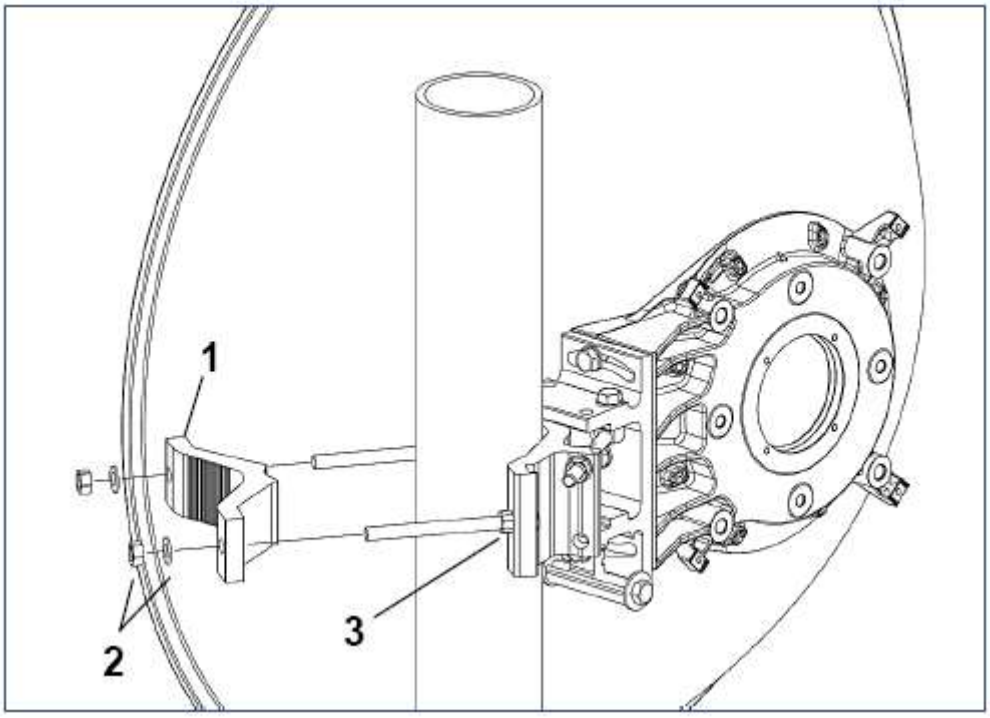

Figure 23: Clamp orientation for pipes Ø50-66mm (32Nm)

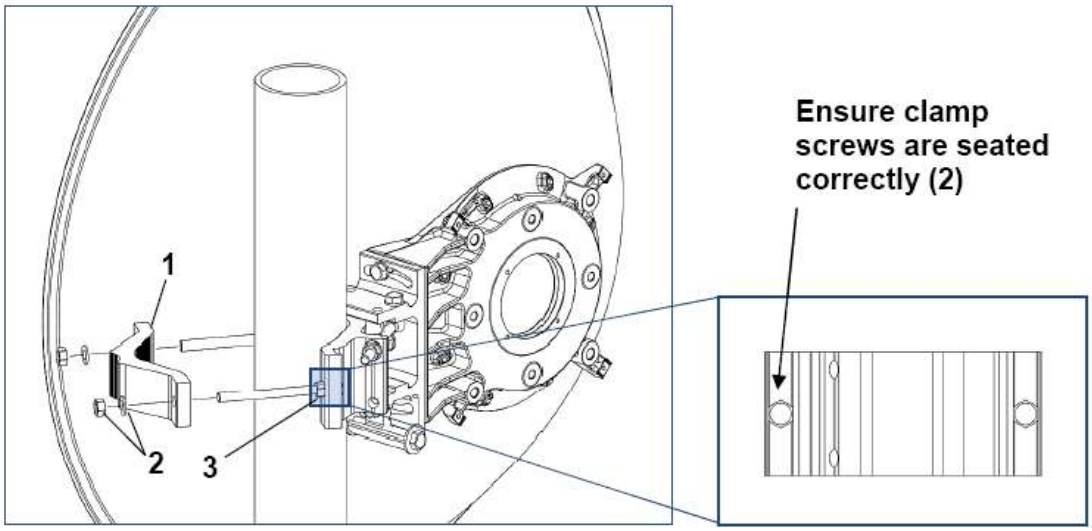

Figure 24: Clamp orientation for pipes Ø66-120mm (24Nm)

Ceragon Proprietary and Confidential

7.8 Antenna Alignment Procedure

7.8.1 Elevation Adjustment

a) Ensure that the 3 M8 screws (1) are slightly loose.

b) Rotate the elevation screw to adjust the direction ± 15°.

c) On completion, tighten the screws (1) with torque of 24 Nm ± 5%.

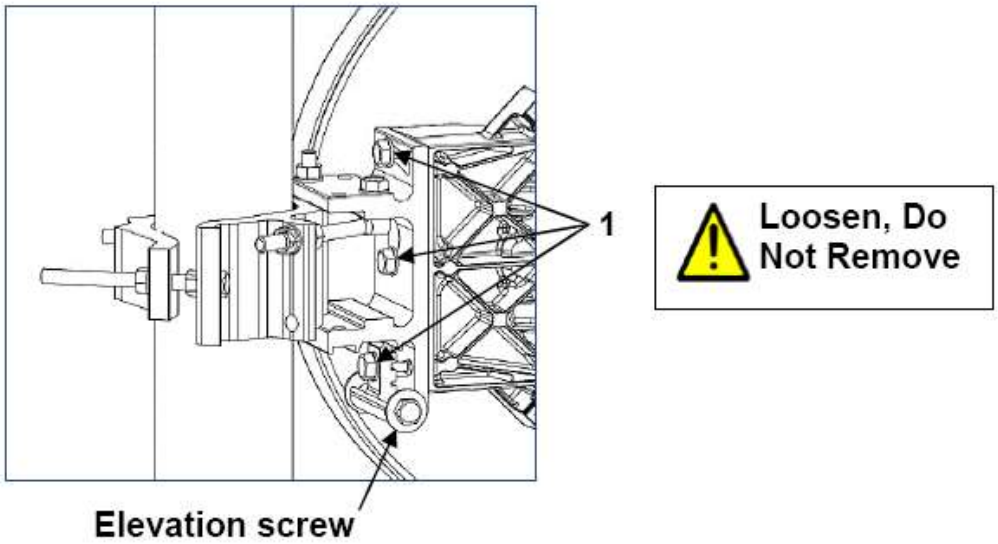

7.8.2 Azimuth Adjustment

a) Ensure that the 3 M8 nuts (2) (3) and 1 M8 screw (4) are slightly loose.

b) Move the M8 nuts (2) along the Azimuth screw to adjust the direction ± 15°.

c) On completion, tighten the nuts (2) (3) and screw (4) with torque of 24 Nm ± 5%.

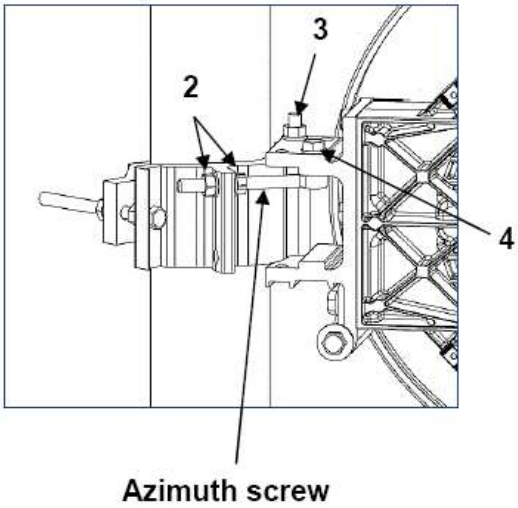

Ceragon Proprietary and Confidential