0.6m (2ft) Low Profile Antennas Microwave Antenna Specifications

Document ID: DOC-00049509 Revision: a.02 Release Date: 29/08/2016

General Specifications

Nominal diameter	0.6m (2ft)
Polarization	Single, Vertical or Horizontal
Radio interface	Direct Mount for RFU-C type ODU
Antenna color	NCS S 2502 R Grey
Radome color	NCS S 2502 R Grey
Radome type	7 – 23 GHz: UV Stabilized PC 26 – 80 GHz: ABS/PMMA
Packing type	Carton
Gross weight, kg	11,2 -12,4
Packed dimensions, mm	L x W x H 720 / 480 x 790 x 320
Packing Volume, m³	0,144

Electrical Specifications

Antenna Marketing Model	**Am-2-7_8-CR1**	**Am-2-11W-CR1**	**Am-2-13-CR1**	**Am-2-15-CR1**	**Am-2-18-CR1**
PN	**AN-2511-0**	**AN-2512-0**	**AN-2513-0**	**AN-2514-0**	**AN-2515-0**
Frequency Band (GHz)	7.100 – 8.500	10.000 - 11.700	12.750 - 13.250	14.400 - 15.350	17.700 - 19.700
Waveguide Interface	UBR84	UBR100	UBR120	UBR140	UBR220
Gain (dBi) Low	31.2	34.1	35.9	37.2	39.4
Gain (dBi) Mid	31.7	35.2	36.3	37.5	39.7
Gain (dBi) High	32.3	35.2	36.3	37.6	40.5
3 dB Beam Width (°)	4.2	3.1	2.8	2.4	2.0
VSWR	1.33	1.33	1.30	1.30	1.30
F/B Ratio (dB)	58	61	62	65	69
XPD (dB)	30	30	30	30	30
ETSI Compliance	R1, C3	R1, C3	R1, C3	R2, C3	R2, C3
FCC Compliance	N/A	Cat A/B	N/A	N/A	Cat A
RPE Number	906-HAE0806	906-HAE1106	906-HAE1306	906-HAE1506	906-HAE1806

Copyright © 2015 by Ceragon Networks Ltd. All rights reserved.

Antenna Marketing Model	**Am-2-23-CR1**	**Am-2-26-CR1**	**Am-2-28-CR1**	**Am-2-32-CR1**	**Am-2-38-CR1**
PN	**AN-2516-0**	**AN-2517-0**	**AN-2518-0**	**AN-2519-0**	**AN-2520-0**
Frequency Band (GHz)	21.200 - 23.600	24.000 - 26.500	27.500 - 29.500	31.000 - 33.400	37.000 - 40.000
Waveguide Interface	UBR220	UBR220	UBR320	UBR320	UBR320
Gain (dBi) Low	41.4	42.0	43.0	44.2	45.0
Gain (dBi) Mid	41.6	42.4	43.3	44.4	45.0
Gain (dBi) High	41.6	42.3	43.6	44.2	45.9
3 dB BW (°)	1.6	1.4	1.2	1.1	0.9
VSWR	1.30	1.30	1.30	1.30	1.30
F/B Ratio (dB)	65	68	69	62	65
XPD（dB）	30	30	30	30	30
ETSI Compliance	R3, C3	R4, C3	R4, C3	R5, C3	R5, C3B
FCC Compliance	Cat A	Cat A	N/A	N/A	Cat A
RPE Number	906-HAE2306	906-HAE2606	906-HAE2806	906-HAE3206	906-HAE3806

Antenna Marketing Model	**Am-2-42-CR1**	**Am-2-80-CR1**
PN	**AN-2521-0**	**AN-2522-0**
Frequency Band (GHz)	40.500 - 43.500	71.000 – 86.000
Waveguide Interface	UG-383/U Modified	UG-387/U Modified
Gain (dBi) Low	46.0	50.0
Gain (dBi) Mid	46.8	50.8
Gain (dBi) High	46.6	51.0
3 dB BW (°)	0.9	0.5
VSWR	1.30	1.50
F/B Ratio (dB)	64	68
XPD（dB）	30	30
ETSI Compliance	R5, C3B	R7, C3
FCC Compliance	N/A	OK
RPE Number	906-HAE4206	906-HAE8006

Mechanical Specifications

Wind Velocity Operational, km/h	180
Wind Velocity Survival Rating, km/h	250
Ice Load, mm	25
Azimuth Adjustment, Degrees	±15
Elevation Adjustment, Degrees	±15
Mounting Pipe Diameter, mm	50 to 120 (80GHz 90 to 120)
Net weight, kg	7/8 GHz: 8,1kg 10/11GHz 8,0kg 13 GHz 7,1kg 15 GHz 7,1kg 18 GHz 7,0kg 23 GHz 7,0kg 24/26 GHz 8,2kg 28 GHz 8,2kg 32 GHz 7,9kg 38 GHz 7,7kg 42 GHz 7,7kg 80 GHz 7,7kg
Feed horn, Operational Pressure, KPa	40
Operational Temperature, °C	-45 to +55
Storage Temperature, °C	-50 to +85
Adjustment Struts	None
Fixed Support Struts	None
Humidity	100%
Rain Intensity, mm/min	15
Solar Radiation, W/m2	1120
Electrical properties	ETSI EN 302 217-4-2
Vibration	ETSI 300 019-2-4 V2.2.2 (2003-04) T4.1E: 4M5
RoHS 2002/95/EC	Compliant

Outline Dimensions (mm)

	8-11 GHz	13-23 GHz	24-42GHz	80 GHz
A	50 to 120	50 to 120	50 to 120	90 to 120
B	664	670	664	664
C	315	295	403	403
D	254	254	254	254
E	229	229	338	338

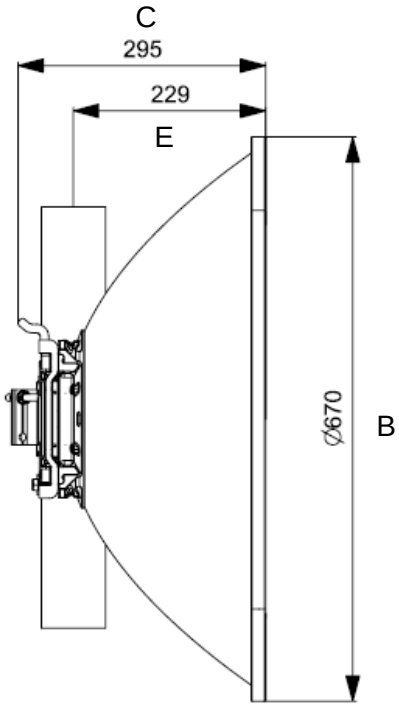

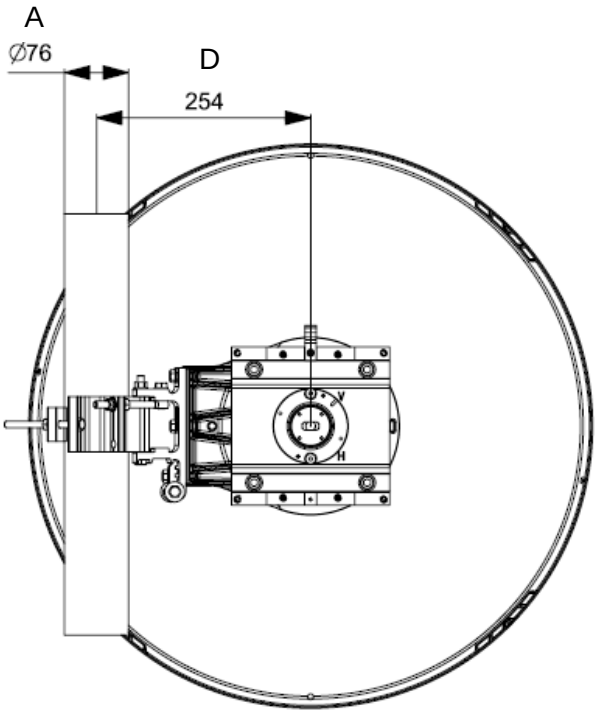

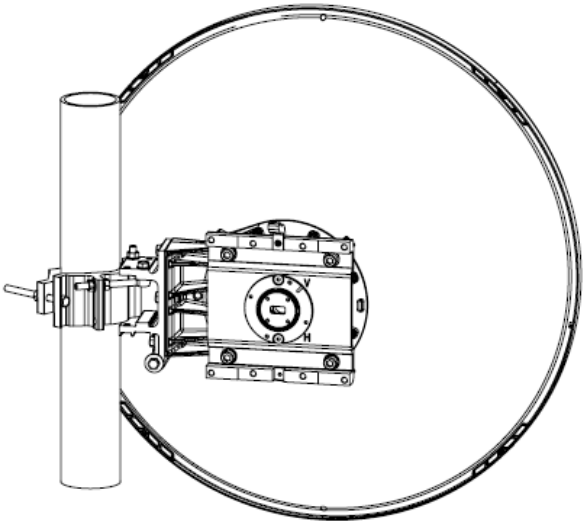

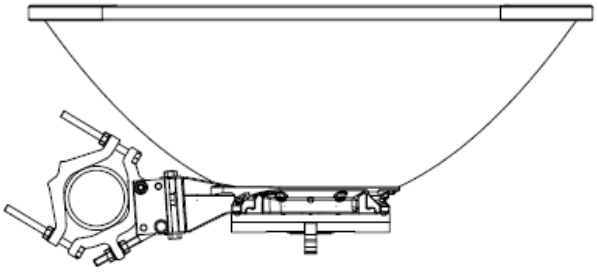

Wind Forces

The axial, side and twisting moment forces stated are maximum loads applied to the tower by the antenna at a survival wind speed of 250 km/h (70 m/s). They are, in every case, the result of wind from the most critical direction for each parameter. The individual maximums may not occur simultaneously. All forces are referenced to the antenna mounting pipe.

Axial Force (F_A), N	934 (convex radome) / 1149 (flat radome)
Side Force (F_S), N	298 / 262
Twisting Moment (M_T), N•m	237 / 293

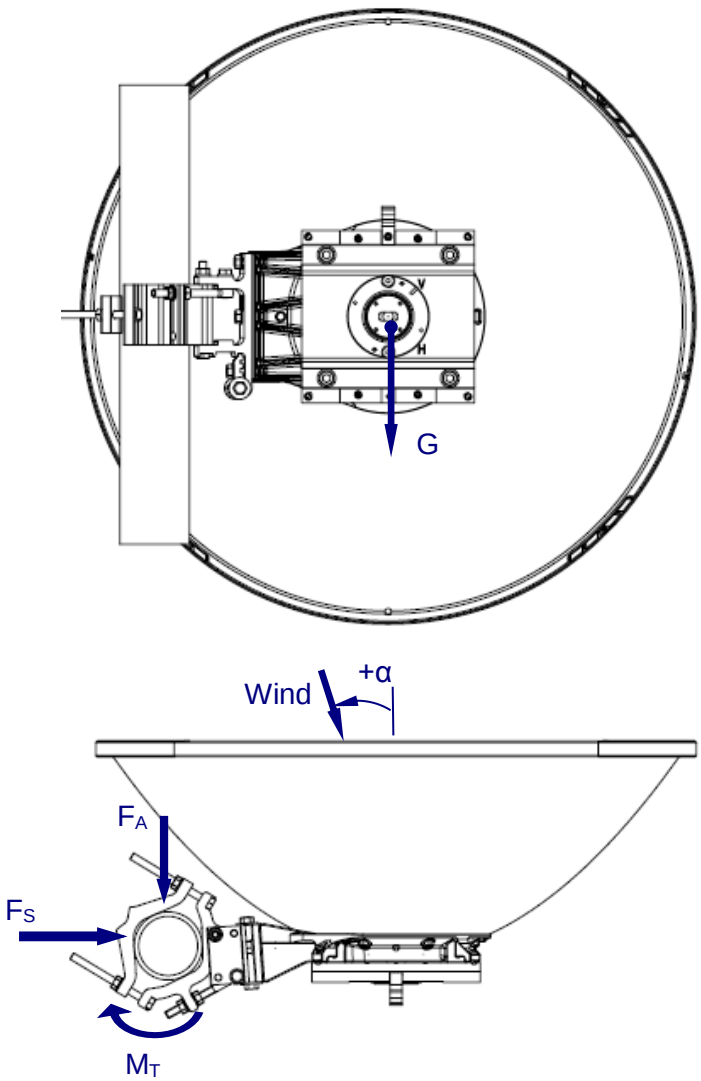

Radiation Pattern Envelope

Co-polar and Xp-polar response are represented for both horizontal and vertical polarizations. The curves are identified as follows:

HH – Response of horizontally polarized port to a horizontally polarized signal.

VV – Response of vertically polarized port to a vertically polarized signal.

XP – HV/VH

HV – Response of horizontally polarized port to a vertically polarized signal.

VH – Response of vertically polarized port to a horizontally polarized signal.

Am-2-08W-CR

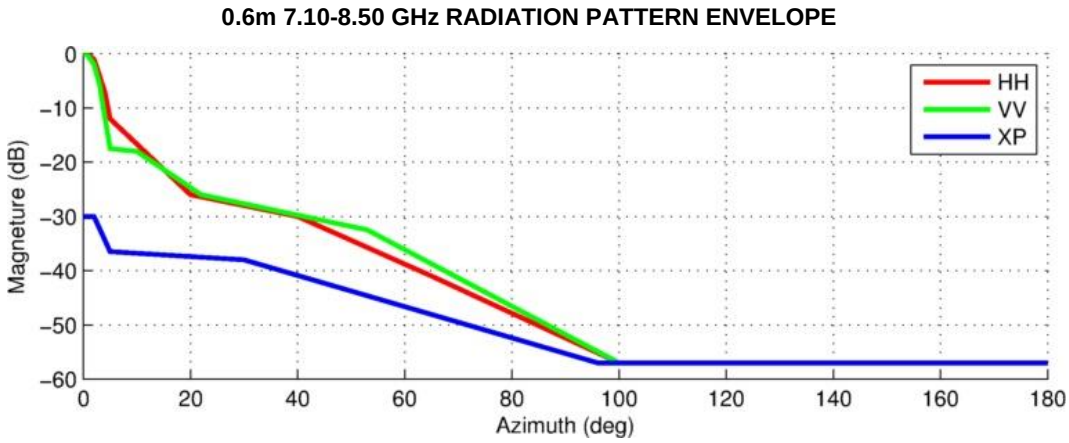

Radiation Pattern Envelope

Co-polar and Xp-polar response are represented for both horizontal and vertical polarizations. The curves are identified as follows:

HH – Response of horizontally polarized port to a horizontally polarized signal.

VV – Response of vertically polarized port to a vertically polarized signal.

XP – HV/VH

HV – Response of horizontally polarized port to a vertically polarized signal.

VH – Response of vertically polarized port to a horizontally polarized signal.

Am-2-11W-CR

0.6m 10.00-11.70 GHz RADIATION PATTERN ENVELOPE

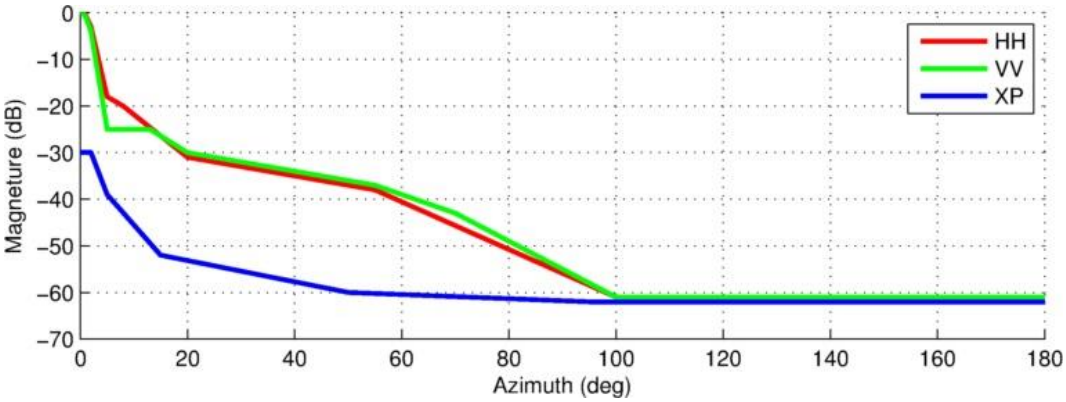

In the sub band 10.55 - 11.70 GHz, this antenna fulfills the following RPE:

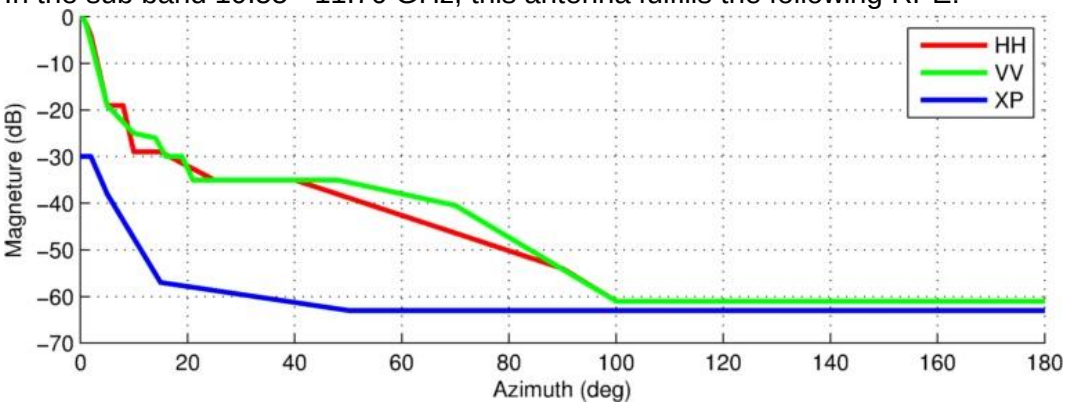

Radiation Pattern Envelope

Co-polar and Xp-polar response are represented for both horizontal and vertical polarizations. The curves are identified as follows:

HH – Response of horizontally polarized port to a horizontally polarized signal.

VV – Response of vertically polarized port to a vertically polarized signal.

XP – HV/VH

HV – Response of horizontally polarized port to a vertically polarized signal.

VH – Response of vertically polarized port to a horizontally polarized signal.

Am-2-13-CR

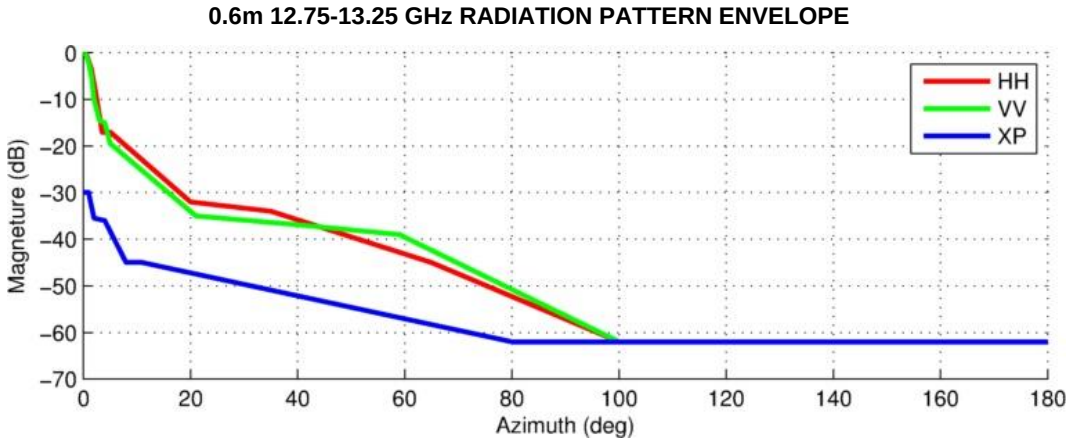

Radiation Pattern Envelope

Co-polar and Xp-polar response are represented for both horizontal and vertical polarizations. The curves are identified as follows:

HH – Response of horizontally polarized port to a horizontally polarized signal.

VV – Response of vertically polarized port to a vertically polarized signal.

XP – HV/VH

HV – Response of horizontally polarized port to a vertically polarized signal.

VH – Response of vertically polarized port to a horizontally polarized signal.

Am-2-15-CR

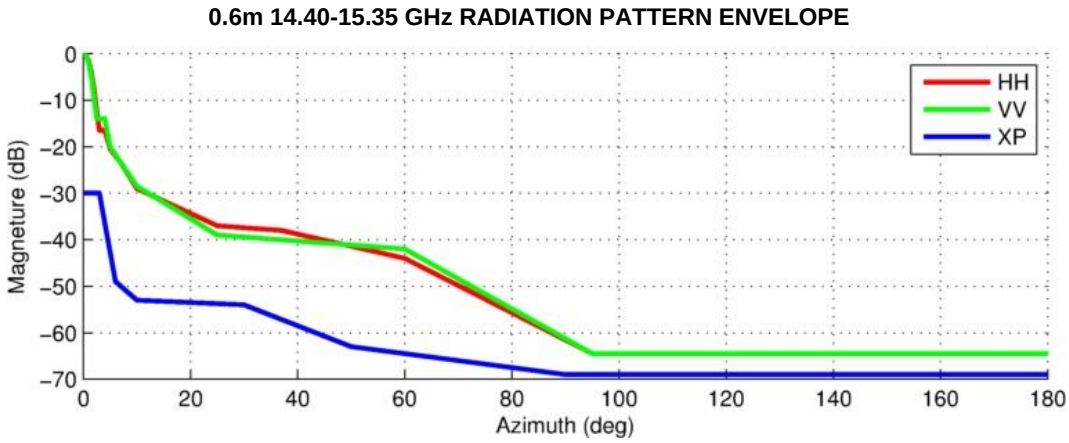

Radiation Pattern Envelope

Co-polar and Xp-polar response are represented for both horizontal and vertical polarizations. The curves are identified as follows:

HH – Response of horizontally polarized port to a horizontally polarized signal.

VV – Response of vertically polarized port to a vertically polarized signal.

XP – HV/VH

HV – Response of horizontally polarized port to a vertically polarized signal.

VH – Response of vertically polarized port to a horizontally polarized signal.

Am-2-18-CR

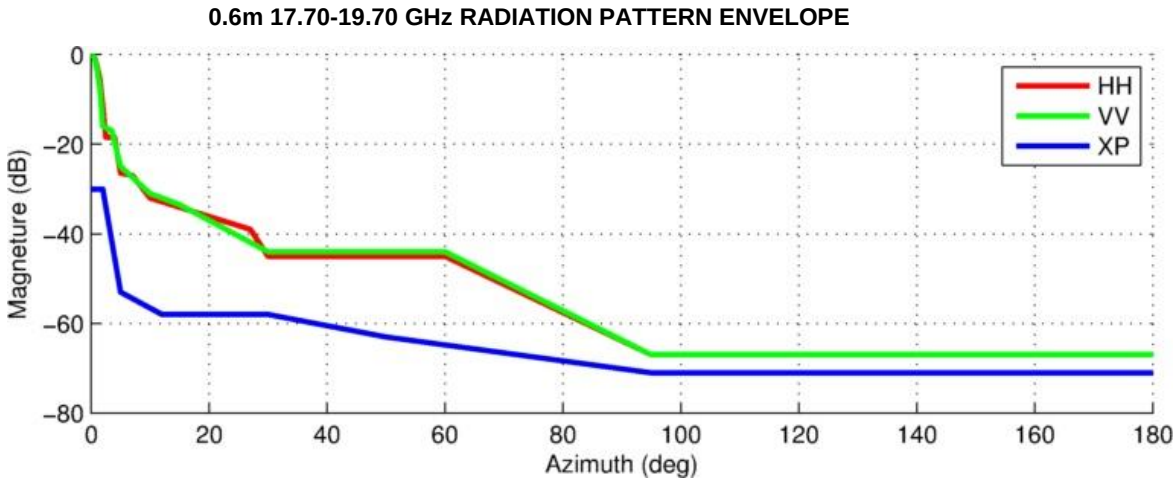

Radiation Pattern Envelope

Co-polar and Xp-polar response are represented for both horizontal and vertical polarizations. The curves are identified as follows:

HH – Response of horizontally polarized port to a horizontally polarized signal.

VV – Response of vertically polarized port to a vertically polarized signal.

XP – HV/VH

HV – Response of horizontally polarized port to a vertically polarized signal.

VH – Response of vertically polarized port to a horizontally polarized signal.

Am-2-23-CR

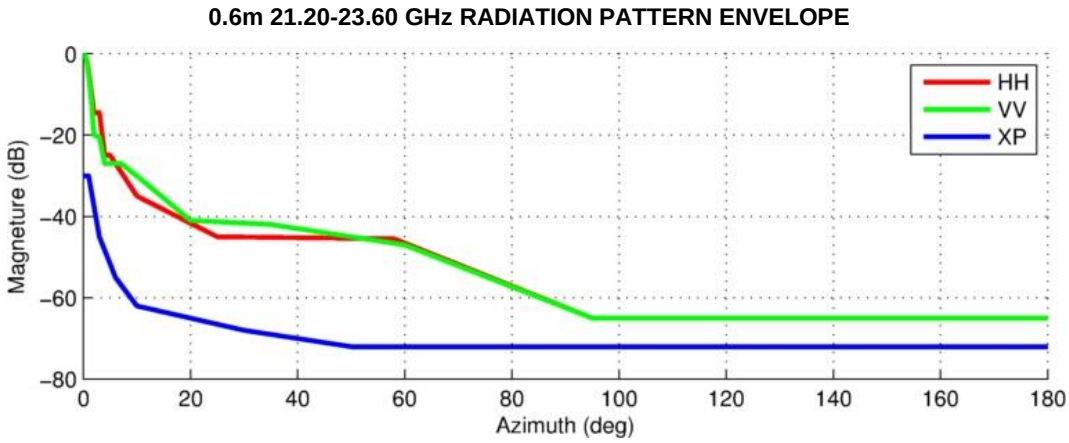

Radiation Pattern Envelope

Co-polar and Xp-polar response are represented for both horizontal and vertical polarizations. The curves are identified as follows:

HH – Response of horizontally polarized port to a horizontally polarized signal.

VV – Response of vertically polarized port to a vertically polarized signal.

XP – HV/VH

HV – Response of horizontally polarized port to a vertically polarized signal.

VH – Response of vertically polarized port to a horizontally polarized signal.

Am-2-26-CR

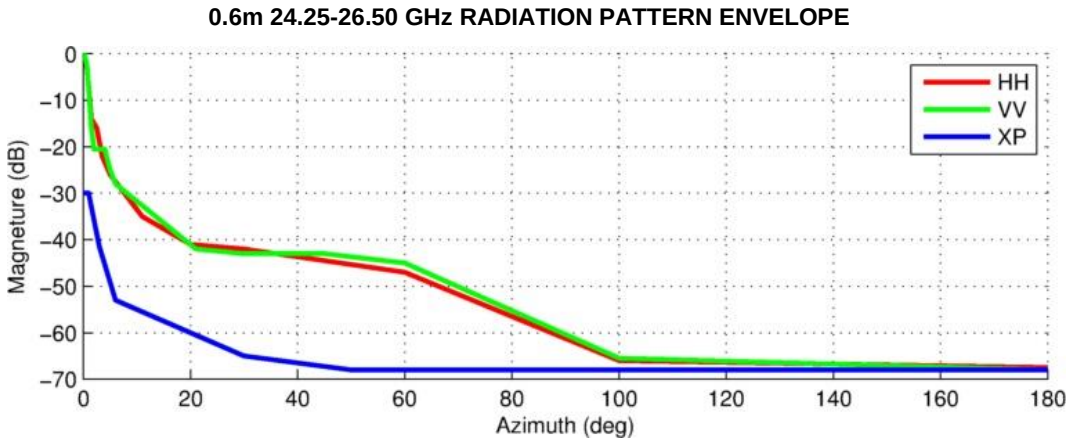

Radiation Pattern Envelope

Co-polar and Xp-polar response are represented for both horizontal and vertical polarizations. The curves are identified as follows:

HH – Response of horizontally polarized port to a horizontally polarized signal.

VV – Response of vertically polarized port to a vertically polarized signal.

XP – HV/VH

HV – Response of horizontally polarized port to a vertically polarized signal.

VH – Response of vertically polarized port to a horizontally polarized signal.

Am-2-28-CR

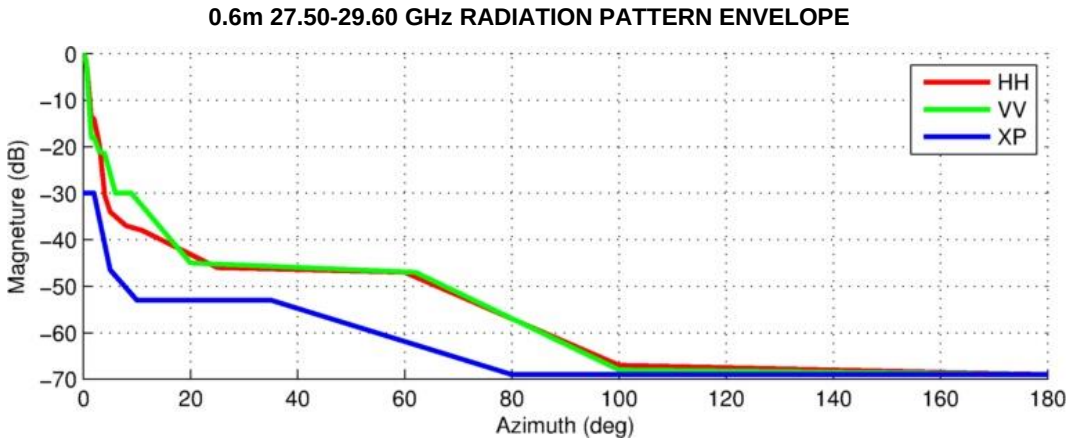

Radiation Pattern Envelope

Co-polar and Xp-polar response are represented for both horizontal and vertical polarizations. The curves are identified as follows:

HH – Response of horizontally polarized port to a horizontally polarized signal.

VV – Response of vertically polarized port to a vertically polarized signal.

XP – HV/VH

HV – Response of horizontally polarized port to a vertically polarized signal.

VH – Response of vertically polarized port to a horizontally polarized signal.

Am-2-32-CR

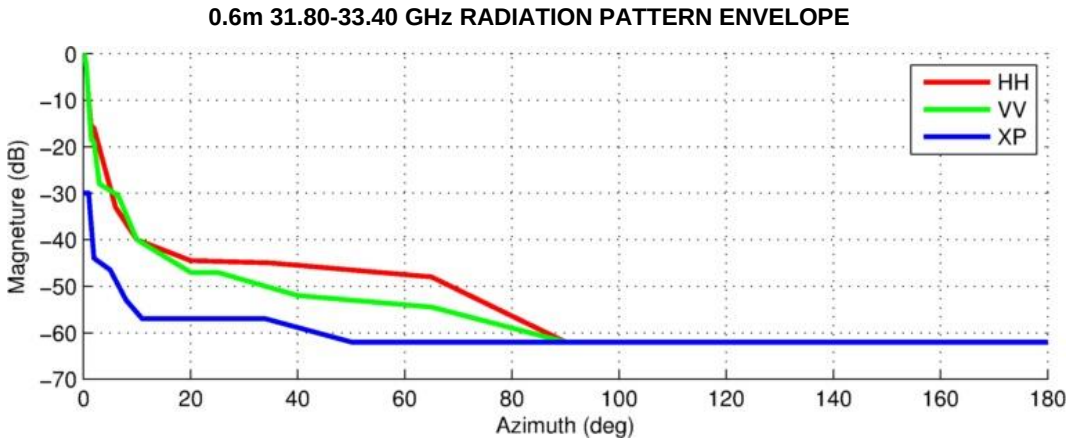

Radiation Pattern Envelope

Co-polar and Xp-polar response are represented for both horizontal and vertical polarizations. The curves are identified as follows:

HH – Response of horizontally polarized port to a horizontally polarized signal.

VV – Response of vertically polarized port to a vertically polarized signal.

XP – HV/VH

HV – Response of horizontally polarized port to a vertically polarized signal.

VH – Response of vertically polarized port to a horizontally polarized signal.

Am-2-38-CR

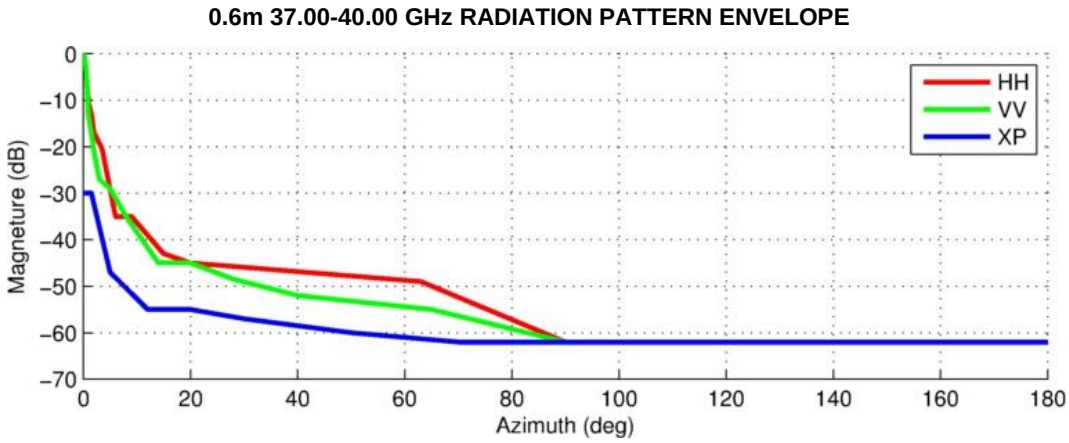

Radiation Pattern Envelope

Co-polar and Xp-polar response are represented for both horizontal and vertical polarizations. The curves are identified as follows:

HH – Response of horizontally polarized port to a horizontally polarized signal.

VV – Response of vertically polarized port to a vertically polarized signal.

XP – HV/VH

HV – Response of horizontally polarized port to a vertically polarized signal.

VH – Response of vertically polarized port to a horizontally polarized signal.

Am-2-42-CR

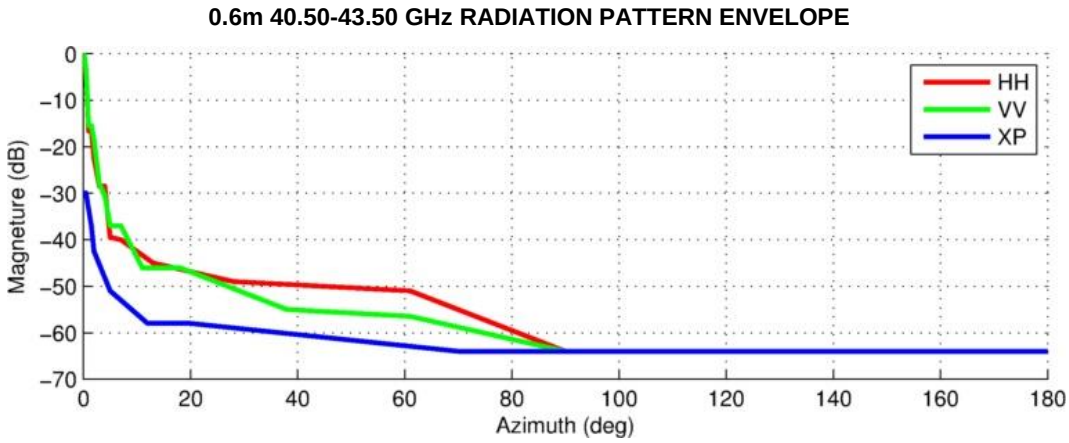

Radiation Pattern Envelope

Co-polar and Xp-polar response are represented for both horizontal and vertical polarizations. The curves are identified as follows:

HH – Response of horizontally polarized port to a horizontally polarized signal.

VV – Response of vertically polarized port to a vertically polarized signal.

XP – HV/VH

HV – Response of horizontally polarized port to a vertically polarized signal.

VH – Response of vertically polarized port to a horizontally polarized signal.

Am-2-80-CR
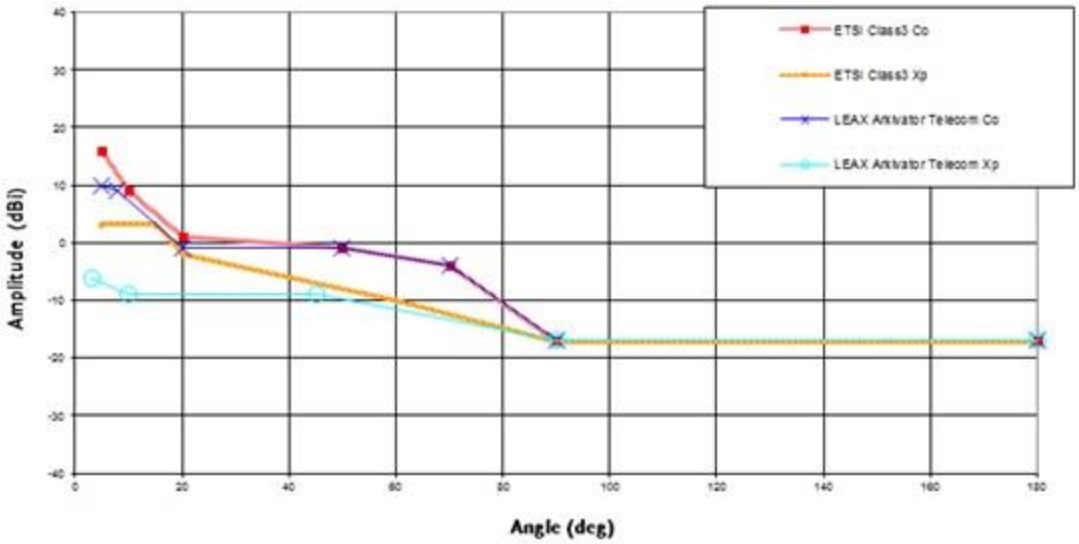
0.6m 71.00-86.00 GHz RADIATION PATTERN ENVELOPE