Installation Guide

FibeAir® IP-20V

Part ID: BM-0296-0 | DOC-00042494 Rev A.04

December 2018

© Copyright 2018 by Ceragon Networks Ltd. All rights reserved.

Notice

This document contains information that is proprietary to Ceragon Networks Ltd. No part of this publication may be reproduced, modified, or distributed without prior written authorization of Ceragon Networks Ltd. This document is provided as is, without warranty of any kind.

Trademarks

Ceragon Networks®, FibeAir® and CeraView® are trademarks of Ceragon Networks Ltd., registered in the United States and other countries.

Ceragon® is a trademark of Ceragon Networks Ltd., registered in various countries.

CeraMap™, PolyView™, EncryptAir™, ConfigAir™, CeraMon™, EtherAir™, CeraBuild™, CeraWeb™, and QuickAir™, are trademarks of Ceragon Networks Ltd.

Other names mentioned in this publication are owned by their respective holders.

Statement of Conditions

The information contained in this document is subject to change without notice. Ceragon Networks Ltd. shall not be liable for errors contained herein or for damage in connection with the furnishing, performance, or use of this document or equipment supplied with it.

Open Source Statement

The Product may use open source software, among them O/S software released under the GPL or GPL alike license ("Open Source License"). Inasmuch that such software is being used, it is released under the Open Source License, accordingly. The complete list of the software being used in this product including their respective license and the aforementioned public available changes is accessible at:

Network element site: ftp://ne-open-source.license-system.com

NMS site: ftp://nms-open-source.license-system.com/

Information to User

Any changes or modifications of equipment not expressly approved by the manufacturer could void the user's authority to operate the equipment and the warranty for such equipment.

Intended Use/Limitation

Fixed point-to-point radio links for private networks.

Authorized to Use

Only entities with individual authorization from the National Regulator to operate the mentioned radio equipment.

The equipment can be used in the following EU countries:

Austria (AT) - Belgium (BE) - Bulgaria (BG) - Switzerland/Liechtenstein (CH) - Cyprus (CY) - Czech Republic (CZ) - Germany (DE) – Denmark (DK) - Estonia (EE) - Finland (FI) - France (FR) -Greece (GR) - Hungary (HU) - Ireland (IE) – Iceland (IS) – Italy (IT) – Lithuania (LT) - Luxembourg (LU) – Latvia (LV) - Malta (MT) - Netherlands (NL) - Norway (NO) - Portugal (PT) - Romania (RO) - Sweden (SE) - Slovenia (SI) - Slovak Republic (SK) – United Kingdom (UK) – Spain (SP) – Poland (PL)

Table of Contents

1. Before You Start 8

1.1 Important Notes 8

1.2 Safety Precautions & Declared Material 8
1.2.1 General Equipment Precautions 8
1.2.2 Précautions générales relatives à l'équipement 9
1.2.3 Allgemeine Vorsichtsmaßnahmen für die Anlage 10

1.3 Declaration of Compliance with FCC and Canadian Regulations 10

1.4 Frequency Restrictions for Canada 11

1.5 Pre-Installation Instructions 11
1.5.1 Packing 11
1.5.2 Transportation and Storage 11
1.5.3 Unpacking 11
1.5.4 Inspection 12

2. Product Hardware Description 13

2.1 IP-20V Hardware Overview 13
2.1.1 IP-20V Interfaces 14

2.2 PoE Injector 16
2.2.1 PoE Injector Interfaces 17

2.3 Powering with External DC 17

2.4 System Components 18

2.5 Adaptors and Installation Kits 18

2.6 Power Specifications 20
2.6.1 Power Input Specifications 20
2.6.2 Power Consumption Specifications 20
2.6.3 Power Connection Options 20
2.6.4 PoE Injector Power Input 20
2.6.5 Important Notes! 21

2.7 Environmental Specifications 21

3. Cable Installation and Grounding 22

3.1 Minimum and Maximum Cable Diameter 22

3.2 Grounding the Cables 22

3.3 Grounding the IP-20V Unit 25

3.4 Power Source 26

3.5 Surge Protection 26

3.6 Available Cable Options 27
3.6.1 Fiber Optic Cables – Single Mode 27
3.6.2 Fiber Optic Cables – Multi Mode 28
3.6.3 DC Cable and Connector 29
3.6.4 Ethernet Cable and Specifications 29

Ceragon Proprietary and Confidential

3.6.5 Outdoor Ethernet Cable Specifications 31
3.6.6 Outdoor DC Cable Specifications 32

3.7 Securing the Cables 32

3.8 Special Instructions for use of Glands 33
3.8.1 General Installation Procedure 34

3.9 Connecting an Optical Fiber Cable and SFP 40
3.9.1 Types of SFPs 40
3.9.2 Connecting Optical Fiber to SFPs 42

3.10 Connecting a DC Power Cable 47

3.11 Connecting the Ethernet Cable 50
3.11.1 Preparing the Ethernet Cable and Plug-in Field 50
3.11.2 Preparing the Ethernet Cable Already Assembled 52
3.11.3 Connection of Ethernet Cable to IP-20V 53

4. PoE Injector Installation and Connection 56

4.1 PoE Injector Cable Connection 56

4.2 PoE Injector Grounding 57

4.3 PoE Injector Wall Mount Installation 57

4.4 PoE Injector Pole Mount Installation 59

4.5 PoE Injector 19” Rack Installation 60

4.6 PoE Injector ETSI Rack Installation 61

5. Installation Procedure and Antenna Alignment 63

5.1 Pole Mount Assembly and Installation 67
5.1.1 Procedure 67

5.2 Wall Mount Assembly and Installation 69
5.2.1 Procedure 70

5.3 Attaching the IP-20V to the Installation and Alignment Device 71

5.4 Performing Antenna Alignment 72
5.4.1 Adjusting the Antenna Azimuth 72
5.4.2 Adjusting the Antenna Elevation 78

Ceragon Proprietary and Confidential

List of Figures

Figure 1: IP-20V Rear View (Right) and Front View (Left) 13
Figure 2: Cable Gland Construction 13
Figure 3: IP-20V Interfaces 14
Figure 4: RSL Interface 15
Figure 5: Grounding Screw 15
Figure 6: PoE Injector 16
Figure 7: PoE Injector Ports 17
Figure 8: Two-Wire to PoE Port Power Adaptor 17
Figure 9: IP-20V 18
Figure 10: PoE Injector 18
Figure 11: Easy-Install Mounting and Alignment Kit 18
Figure 12: Cable Grounding Kit 22
Figure 13: Cable Design 30
Figure 14: Tightening the Front Portion of the Gland 38
Figure 15: Tightening the Rear Portion of the Gland 38
Figure 16: Installation and Alignment Device – Azimuth and Elevation Adjustment Tools 63
Figure 17: Installation and Alignment Device – Azimuth Range 64
Figure 18: Installation and Alignment Device – Extended Azimuth Range 65
Figure 19: Installation and Alignment Device – Delivery Elevation (45° Downward) 65
Figure 20: Installation and Alignment Device – Highest Elevation (45° Upward) 66
Figure 21: Horizontal Polarization – Screws and Washers 71
Figure 22: Vertical Polarization – Screws and Washers 71
Figure 23: Horizontal Polarization – Radio and Installation and Alignment Kit 71
Figure 24: Horizontal Polarization – Antenna (Front) 71
Figure 25: Vertical Polarization – Radio and Installation and Alignment Kit 72
Figure 26: Vertical Polarization – Antenna (Front) 72
Figure 27: Azimuth Screws – Top View (Azimuth 45° to the Right) 76
Figure 28: Removing the Azimuth Screws (Side View) 76
Figure 29: Azimuth Screws in New Placement – Top View (Azimuth 45° to the Right) 77
Figure 30: Repositioning the Azimuth Screws (Side View) 77

Ceragon Proprietary and Confidential

List of Tables

Table 1: IP-20V Chassis Marketing Models 14
Table 2: IP-20V Accessories 18
Table 3: PoE Injector 19
Table 4: Two-Wire to PoE Port Power Adaptor 19
Table 5: Power Input Specifications 20
Table 6: Power Consumption Specifications 20
Table 7: Cable Grounding Kit 22
Table 8: Ethernet Cable Color Code 30
Table 9: Outdoor Ethernet Cable Electrical Requirements 31
Table 10: Outdoor Ethernet Cable Mechanical/Environmental Requirements 31
Table 11: Outdoor DC Cable Electrical Requirements 32
Table 12: Outdoor DC Cable Mechanical/Environmental Requirements 32
Table 13: Cable Clamps 32
Table 14: Glands Kit 33
Table 15: Gland Cap 33
Table 16: CSFP – SFP Compatibility Example 40
Table 17: SFP Module Recommendations 40
Table 18: CSFP Module Recommendations 41
Table 19: SFP Module Recommendations for Third Party Equipment 41
Table 20: Approved 10 GbE SFP+ Modules 41
Table 21: Materials for Preparing Ethernet Data Cables 50

Ceragon Proprietary and Confidential

About This Guide

This guide describes the FibeAir IP-20V installation procedures and provides additional information concerning system parts and frequency bands.

What You Should Know

For the warranty to be honored, install the unit in accordance with the instructions in this manual.

Target Audience

This guide contains technical information about IP-20V installation, and is intended for use by qualified Ceragon technical personnel at all levels.

Related Documents

- FibeAir IP-20V Technical Description
- FibeAir IP-20C, IP-20S, and IP-20V User Guide
- FibeAir IP-20 Series MIB Reference

Ceragon Proprietary and Confidential

1. Before You Start

1.1 Important Notes

- For the warranty to be honored, install the unit in accordance with the instructions in this manual.
- Any changes or modifications of equipment not expressly approved by the manufacturer could void the user's authority to operate the equipment and the warranty for such equipment.
- IP-20V is intended for installation in a restricted access location.
- IP-20V must be installed and permanently connected to protective earth by qualified service personnel in accordance with applicable national electrical codes.

1.2 Safety Precautions & Declared Material

1.2.1 General Equipment Precautions

To avoid malfunctioning or personnel injuries, equipment or accessories/kits/plug-in unit installation, requires qualified and trained personnel. Changes or modifications not expressly approved by Ceragon Networks could void the user's authority to operate the equipment.

Where special cables, shields, adapters and grounding kits are supplied or described in this manual, these items must be used, to comply with the FCC regulations.

Use of controls, adjustments, or performing procedures other than those specified herein, may result in hazardous radiation exposure.

When working with an IP-20V, note the following risk of electric shock and energy hazard:
Disconnecting one power supply disconnects only one power supply module. To isolate the unit completely, disconnect all power supplies.

Machine noise information order - 3. GPSGV, the highest sound pressure level amounts to 70 dB (A) or less, in accordance with ISO EN 7779.

Machine noise information order - 3. GPSGV, the highest sound pressure level amounts to 70 dB (A) or less, in accordance with ISO EN 7779.

Make sure to maintain a minimum safe distance of at least 50 cm from the front of the antenna.

Ceragon Proprietary and Confidential

Static electricity may cause body harm, as well as harm to electronic components inside the device. Anyone responsible for the installation or maintenance of the IP-20V must use an ESD Wrist Strap. ESD protection measures must be observed when touching the unit. To prevent damage, before touching components inside the device, all electrostatic must be discharged from both personnel and tools.

In Norway and Sweden:

Equipment connected to the protective earthing of the building installation through the mains connection or through other equipment with a connection to protective earthing – and to a cable distribution system using coaxial cable, may in some circumstances create a fire hazard. Connection to a cable distribution system has therefore to be provided through a device providing electrical isolation below a certain frequency range (galvanic isolator, see EN 60728-11).

Utstyr som er koplet til beskyttelsesjord via nettplugg og/eller via annet jordtilkoplet utstyr – og er tilkoplet et kabel-TV nett, kan forårsake brannfare. For å unngå dette skal det ved tilkopling av utstyret til kabel-TV nettet installeres en galvanisk isolator mellom utstyret og kabel- TV nettet.

Utrustning som är kopplad till skyddsjord via jordat vägguttag och/eller via annan utrustning och samtidigt är kopplad till kabel-TV nät kan i vissa fall medföra risk för brand. För att undvika detta skall vid anslutning av utrustningen till kabel-TV nät galvanisk isolator finnas mellan utrustningen och kabel-TV nätet.

1.2.2 Précautions générales relatives à l'équipement

L’utilisation de commandes ou de réglages ou l'exécution de procédures autres que celles spécifiées dans les présentes peut engendrer une exposition dangereuse aux rayonnements.

L’usage de IP-20V s’accompagne du risque suivant d'électrocution et de danger électrique : le débranchement d'une alimentation électrique ne déconnecte qu'un module d'alimentation électrique. Pour isoler complètement l'unité, il faut débrancher toutes les alimentations électriques.

Bruit de machine d’ordre - 3. GPSGV, le plus haut niveau de pression sonore s'élève à 70 dB (A) au maximum, dans le respect de la norme ISO EN 7779.

Ceragon Proprietary and Confidential

1.2.3 Allgemeine Vorsichtsmaßnahmen für die Anlage

Wenn andere Steuerelemente verwendet, Einstellungen vorgenommen oder Verfahren durchgeführt werden als die hier angegebenen, kann dies gefährliche Strahlung verursachen.

Beachten Sie beim Arbeiten mit IP-20V das folgende Stromschlag- und Gefahrenrisiko: Durch Abtrennen einer Stromquelle wird nur ein

Stromversorgungsmodul abgetrennt. Um die Einheit vollständig zu isolieren, trennen Sie alle Stromversorgungen ab.

Maschinenlärminformations-Verordnung - 3. GPSGV, der höchste Schalldruckpegel beträgt 70 dB(A) oder weniger gemäß EN ISO 7779.

1.3 Declaration of Compliance with FCC and Canadian Regulations

This device complies with FCC Rules Part 15 and with Industry Canada's license-exempt RSSs. Operation is subject to the following two conditions:

(1) This device may not cause harmful interference

(2) this device must accept any interference received including interference that may cause undesired operation.

Le présent appareil est conforme aux CNR d'Industrie Canada applicables aux appareils radio exempts de licence. L'exploitation est autorisée aux deux conditions suivantes :

(1) l'appareil ne doit pas produire de brouillage;

(2) l'utilisateur de l'appareil doit accepter tout brouillage radioélectrique subi, même si le brouillage est susceptible d'en compromettre le fonctionnement.

This equipment has been tested and found to comply with the limits for a Class B digital device, pursuant to Part 15 of the FCC Rules. These limits are designed to provide reasonable protection against harmful interference in a residential installation. This equipment generates, uses and can radiate radio frequency energy and, if not installed and used in accordance with the instructions, may cause harmful interference to radio communications. However, there is no guarantee that interference will not occur in a particular installation. If this equipment does cause harmful interference to radio or television reception, which can be determined by turning the equipment off and on, the user is encouraged to try to correct the interference by one or more of the following measures:

- Reorient or relocate the receiving antenna.
- Increase the separation between the equipment and receiver.
- Connect the equipment into an outlet on a circuit different from that to which the receiver is connected.
- Consult the dealer or an experienced radio/TV technician for help.

Ceragon Proprietary and Confidential

Changes or modifications to this equipment not expressly approved by the party responsible for compliance (Ceragon Networks Ltd.) could void the user's authority to operate the equipment.

This Class B digital apparatus complies with Canadian ICES-003.

Cet appareil numérique de la classe B est conforme a la norme NMB-003 du Canada.

1.4 Frequency Restrictions for Canada

To meet Canadian regulatory requirements, the following IP-20V marketing model must be used in Canada. This model supports a frequency range of 57-64 GHz: *IP-20V-C-ESP-38IA*

For other locations, the following IP-20V marketing model should be used:. This model supports a frequency range of 57-66 GHz: *IP-20V-ESP-38IA*

1.5 Pre-Installation Instructions

1.5.1 Packing

The equipment should be packed and sealed in moisture absorbing bags.

1.5.2 Transportation and Storage

The equipment cases are prepared for shipment by air, truck, railway and sea, suitable for handling by forklift trucks and slings. The cargo must be kept dry during transportation, in accordance with ETS 300 019-1-2, Class 2.3. For sea-transport, deck-side shipment is not permitted. Carrier-owned cargo containers should be used.

It is recommended that the equipment be transported to the installation site in its original packing case.

If intermediate storage is required, the packed equipment must be stored in a dry and cool environment, and out of direct sunlight, in accordance with ETS 300 019-1-1, Class 1.2.

1.5.3 Unpacking

The equipment is packed in sealed plastic bags and moisture absorbing bags are inserted. Any separate sensitive product, i.e. printed boards, are packed in anti-static handling bags. The equipment is further packed in special designed cases.

Marking is done according to standard practice unless otherwise specified by customers. The following details should be marked:

- Customers address
- Contract No
- Site name (if known)
- Case No

Ceragon Proprietary and Confidential

1.5.4 Inspection

Check the packing lists and ensure that correct parts numbers quantities of goods have arrived. Inspect for any damage on the cases and equipment. Report any damage or discrepancy to a Ceragon representative, by e-mail or fax.

Ceragon Proprietary and Confidential

2. Product Hardware Description

2.1 IP-20V Hardware Overview

FibeAir IP-20V is equipped with a 38dBi integrated antenna to minimize its installation form-fit and enable it to blend into an urban environment.

Note:	The equipment is type approved and labelled according to the EU's Radio Equipment Directive 2014/53/EU. 'RED' replaced the previous R&TTE Directive 1999/5/EC since 13 June 2017.

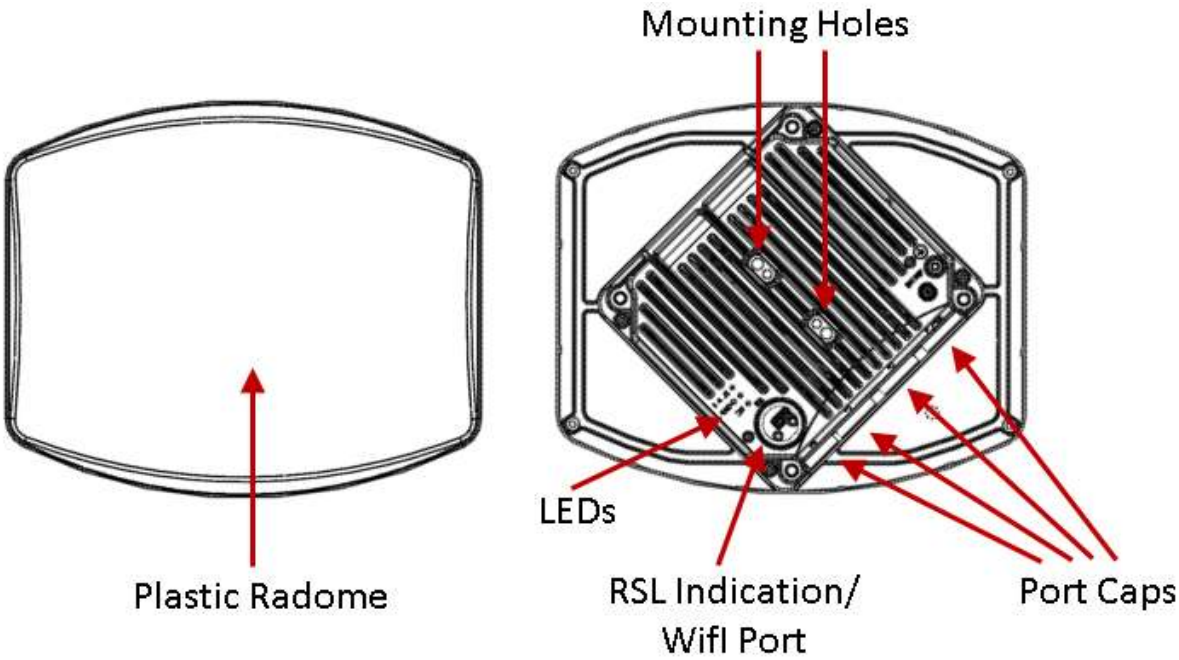

Figure 1: IP-20V Rear View (Right) and Front View (Left)

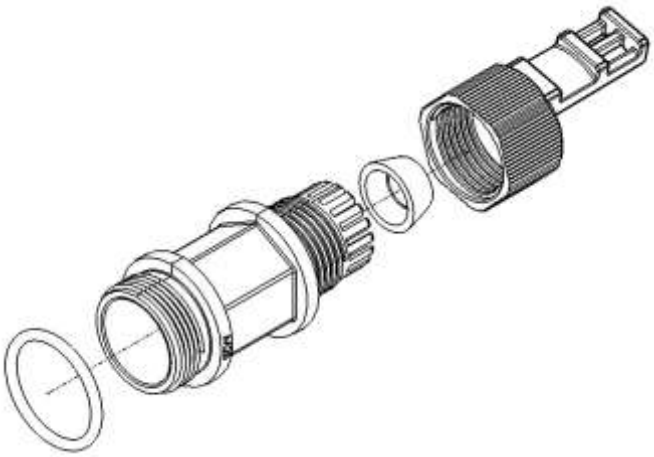

Figure 2: Cable Gland Construction

Note:	The Extension port is smaller than the other ports and requires a special gland.

Ceragon Proprietary and Confidential

2.1.1 IP-20V Interfaces

IP-20V has one electrical Ethernet interface for PoE and management (Port 1), an optical SFP cage that supports regular and CSFP standards (Port 2), and an optical SFP cage that can be configured for 1GE or 10GE (Port 3).

The following table provides the marketing models for IP-20V.

Table 1: IP-20V Chassis Marketing Models

Marketing Model	Description
IP-20V-ESP-38IA	IP-20V V-BAND 10GbE ESP - IA 38dBi (57-66GHz)
IP-20V-C-ESP-38IA	IP-20V V-BAND 10GbE ESP - IA 38dBi (57-64GHz)

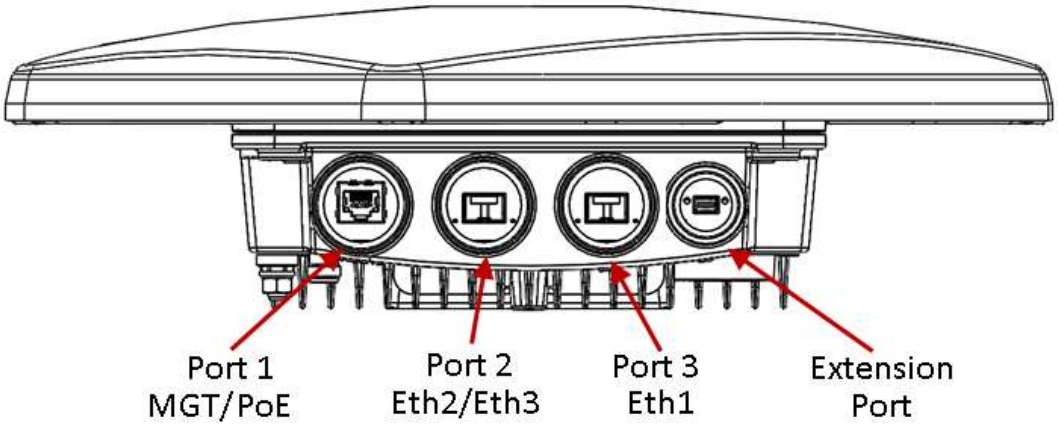

Figure 3: IP-20V Interfaces

- Port 1 (MGT):
  - Electric: 10/100/1000Base-T RJ-45
  - Management only (no traffic)
  - PoE or external DC support (adapter)
- Port 2
  - SFP cage that supports Regular and CSFP standards
    - Regular SFP provides ETH2
    - CSFP (Dual BiDir SFP) provides ETH2 and ETH3
- Port 3
  - SFP cage that supports SFP+ standard
  - 1GE or 10GE Eth traffic (user-configurable)
- Extension Port (Port 4):
  - Direct connection to CPU by technician (see User Guide for details)
- Antenna Port – Ceragon proprietary flange (flange compliant with UG385/U)

Ceragon Proprietary and Confidential

- RSL interface –DVM interface to enable voltage measurement for RSL indication. The RSL measurement is performed using standard DVM testing probes. To access the RSL interface, the user must remove the port's cover and insert the DVM plugs into the sockets, according to the polarization markings.[1]

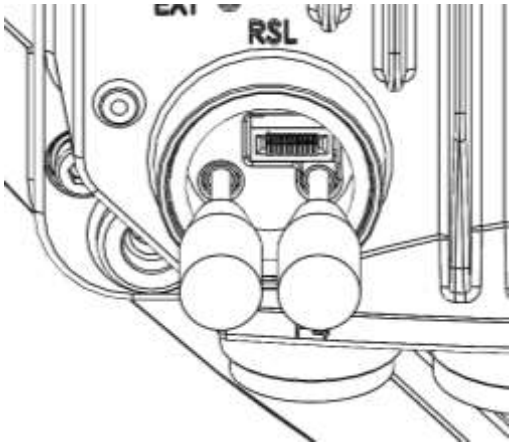

Figure 4: RSL Interface

- Grounding screw

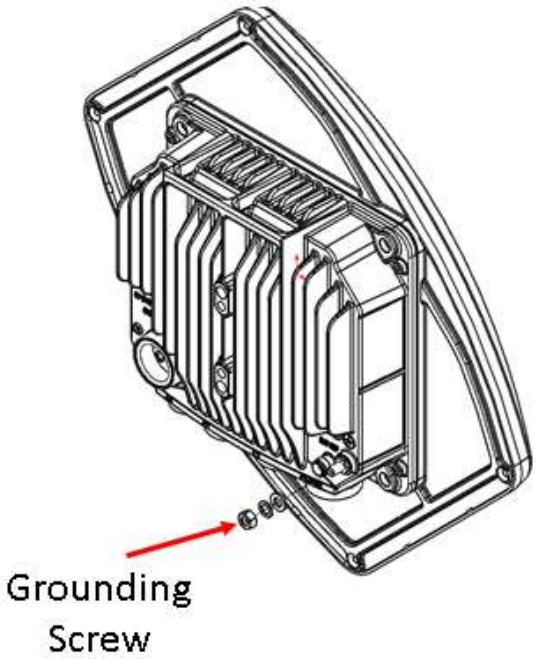

Figure 5: Grounding Screw

[1] The voltage at the RSL port is 1.XX where XX is the RSL level. For example: 1.45V means an RSL of -45 dBm. Note that the voltage measured at the RSL port is not accurate and should be used only as an aid.

Ceragon Proprietary and Confidential

2.2 PoE Injector

The PoE injector is an outdoor unit which can be mounted on a wall, pole, or indoor rack.

Each PoE Injector kit includes the following items:

- PoE injector
- 2 DC power connectors

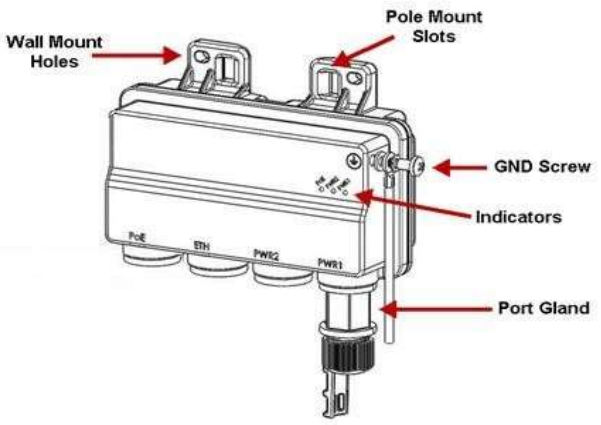

Figure 6: PoE Injector

Two models of the PoE Injector are available:

- **PoE_Inj_AO_2DC_24V_48V** – Includes two DC power ports with power input ranges of ±(18-60)V each.
- **PoE_Inj_AO** – Includes one DC power port (DC Power Port #1), with a power input range of ±(40-60)V.

Note:	An AC-power PoE Injector option is also available. Contact your Ceragon representative for details.

Ceragon Proprietary and Confidential

2.2.1 PoE Injector Interfaces

- Power-Over-Ethernet (PoE) Port
- GbE Data Port supporting 10/100/1000Base-T
- DC Power Port 1 ±(18-60)V or ±(40-60)V
- DC Power Port 2 ±(18-60)V (Optional)
- Grounding screw

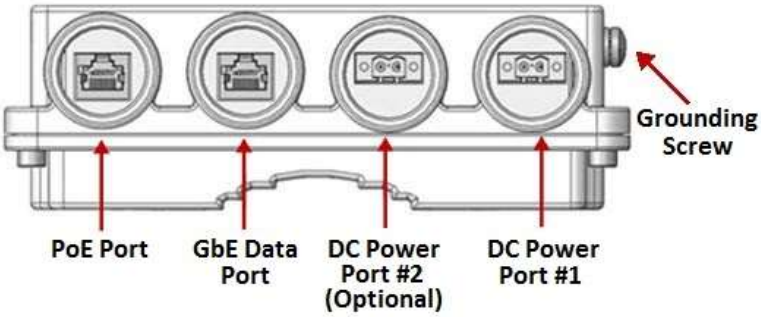

Figure 7: PoE Injector Ports

2.3 Powering with External DC

For configurations in which power is not provided via PoE, a special adaptor (IP-20_Mini_Power_Adaptor) is available that enables users to connect a two-wire power connector to the PoE port. This adaptor is located inside of the gland. In such configurations, only one electrical GbE interface is available (MGT).

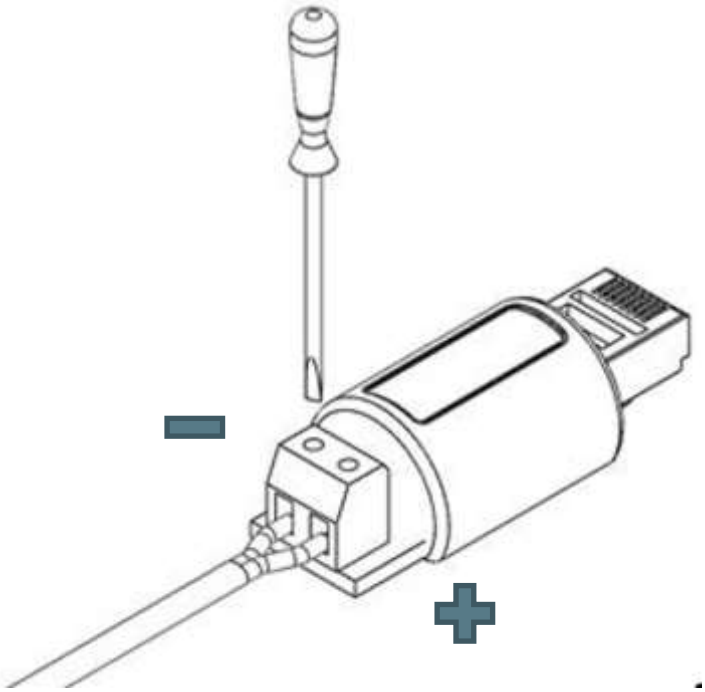

Figure 8: Two-Wire to PoE Port Power Adaptor

Ceragon Proprietary and Confidential

2.4 System Components

The following figures show the main components used in the IP-20V installation procedures.

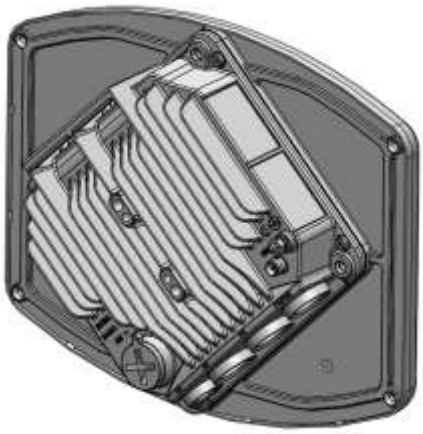

Figure 9: IP-20V

Figure 10: PoE Injector

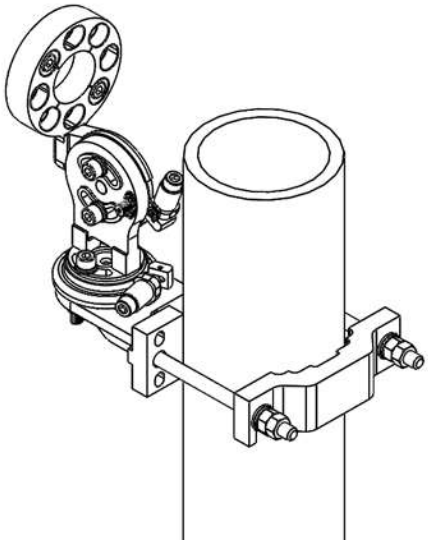

Figure 11: Easy-Install Mounting and Alignment Kit

2.5 Adaptors and Installation Kits

Table 2: IP-20V Accessories

Marketing Model	Description
IP-20E_V_Flat_Ant_Mounting_Kit	IP-20E,IP20V Flat Ant. Mounting Kit

Ceragon Proprietary and Confidential

Table 3: PoE Injector

Marketing Model	Description
PoE_Inj_AO	Includes one DC power port (DC Power Port #1), with a power input range of ±(40-60)V (default offering).
PoE_Inj_AO_2DC_24V_48V	Includes two DC power ports with power input ranges of ±(18-60)V each.
PoE_Inj_19inch_Rack_Mnt_kit	PoE Injector 19” Rack Mount Kit
PoE_Inj_ETSI_Rack_Mnt_kit	PoE Injector ETSI Rack Mount Kit

Table 4: Two-Wire to PoE Port Power Adaptor

Marketing Model	Description
IP-20_Mini_Power_Adaptor	RJ45 to TB Power Adaptor With Protection

Ceragon Proprietary and Confidential

2.6 Power Specifications

2.6.1 Power Input Specifications

Table 5: Power Input Specifications

Standard Input	-48 VDC nominal
DC Input range	-40.5 to -60 VDC

2.6.2 Power Consumption Specifications

Table 6: Power Consumption Specifications

Channel Bandwidth	Power Consumption
<=250 MHz	33W
500 MHz	37W

2.6.3 Power Connection Options

Power Source and Range	Data Connection Type	Connection Length	DC Cable Type / Gage
Ext DC -(40.5 ÷ 60)VDC (Using an RJ-45 to DC cable adaptor)	Optical	≤ 150m	18AWG
	Optical	150m ÷ 300m	14AWG
PoE Injector ±(18 ÷ 60)VDC[2]	Electrical	≤ 100m (328ft)	CAT5e (24AWG)

2.6.4 PoE Injector Power Input

Standard Input	-48 or +24VDC (Optional)
DC Input range	±(18[3]/40.5 to 60) VDC

[2] Optional.

[3] +18VDC extended range is supported as part of the nominal +24VDC support.

Ceragon Proprietary and Confidential

2.6.5 Important Notes!

- The unit must only be installed by service personnel.
- The unit must have a permanent connection to protective grounding.
- Port 2 (ETH2/ETH3) does not provide protection from over-voltages on telecommunication networks for host equipment users.
- The RSL interface connector is intended for technician use only.
- Disconnect device (circuit breaker) in the building installation:
- Shall be readily accessible and incorporated external to the equipment.
- The maximum rating of the overcurrent protection shall be up to 6 Amp.

2.7 Environmental Specifications

Operating: ETSI EN 300 019-1-4 Class 4.1

Temperature range for continuous operating temperature with high reliability:
-33°C (-27°F) to +55°C (131°F)

Temperature range for exceptional temperatures; tested successfully, with limited margins:
-45°C (-49°F) to +60°C (140°F)

Humidity: **5%RH to 100%RH**
IEC529 IP66

Storage: ETSI EN 300 019-1-1 Class 1.2

Transportation: ETSI EN 300 019-1-2 Class 2.3

Ceragon Proprietary and Confidential

3. Cable Installation and Grounding

3.1 Minimum and Maximum Cable Diameter

To fit the gland, the outer cable diameter should be between 6-10 mm. This applies to all glands on both the IP-20V unit and the PoE Injector.

To fit the grounding clamp, the outer diameter of CAT5E Ethernet cables must be between 6-7.1mm.

3.2 Grounding the Cables

Cables must be grounded as follows:

- For fiber cables (see *Connecting an Optical Fiber Cable and SFP* on page 40), no grounding is required.
- For DC power cables (see *Connecting a DC Power Cable* on page 47), no grounding is required.
- For Ethernet cables, the shielded Ethernet cable (SF/UTP construction) must be grounded to the antenna tower at the top (next to the IP-20 unit), the entry to the indoor cabinet, and every 50m, using the kit CAT5E_gnd_kit.

Figure 12: Cable Grounding Kit

Table 7: Cable Grounding Kit

Marketing P/N	Description
CAT5E_gnd_kit	High speed GND KIT for CAT5e SF/UTP 5.9-7.1mm outdoor cable

Ceragon Proprietary and Confidential

To connect the grounding kit:

1 Strip the cable jacket.

2 Place the cable in the middle of the grounding bracket.

3 Close the grounding bracket around the cable.

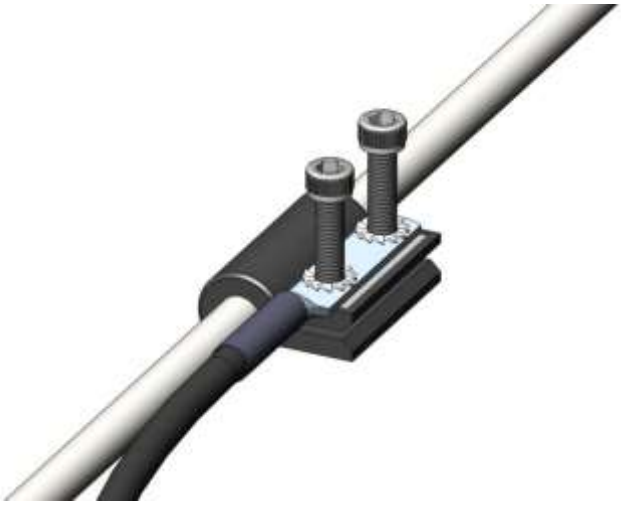

Ceragon Proprietary and Confidential

4 Tighten the two screws to secure the grounding bracket around the cable.

5 Install the grounding lug on the grounding bar, or directly to the tower.

6 Tighten the grounding lug.

Ceragon Proprietary and Confidential

3.3 Grounding the IP-20V Unit

Required Tools

- Metric offset wrench key wrench #3
- Metric wrench 10mm

Procedure

7 On the front of each IP-20V unit, loosen the nut, plain washer, and serrated washer from the GND stud, using the metric offset hexagon key and the wrench.

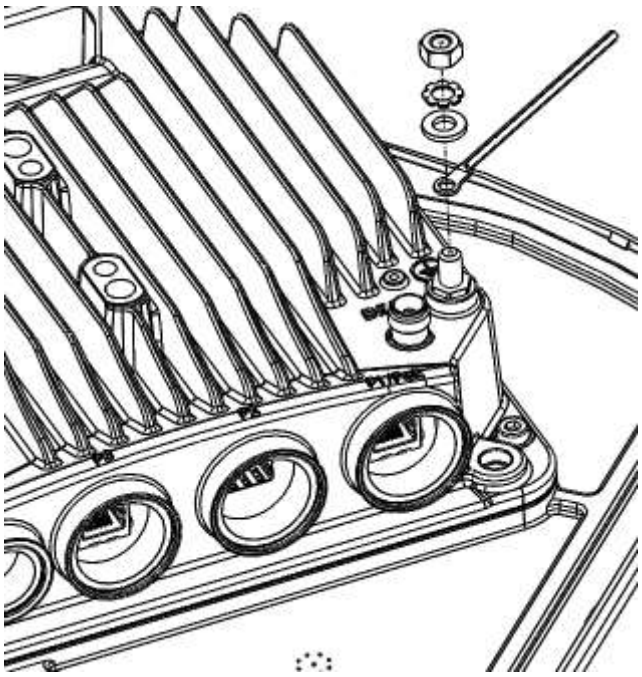

8 Place the cable lug (supplied with the IP-20V grounding kit) in place on the screw.
9 Secure the cable lug.
10 The second side of the GND cable should be connected to the main ground bar or terminal ground bar of the site.
11 Perform a resistance test between the 2 lugs of the GND cable. Verify that the result is 0-2 ohms.

Notes: The unit's earthing screw terminal shall be permanently connected to protective earth in a building installation in accordance with applicable national code and regulations by a service person.

A 2-pole circuit breaker, a branch circuit protector, suitably certified in accordance with applicable national code and regulations, rated maximum 20A, shall be installed for full power disconnection in a building installation.

Ceragon Proprietary and Confidential

Any outdoor antenna cable shield shall be permanently connected to protective earth in a building installation.

3.4 Power Source

The power cable must be plugged into the unit before turning on the external power.

When selecting a power source, the following must be considered:

Recommended: Availability of a UPS (Uninterrupted Power Source), battery backup, and emergency power generator.

The power supply must have grounding points on the AC and DC sides.

Caution! The user power supply GND must be connected to the positive pole in the IP-20V power supply.
Any other connection may cause damage to the system!

Note! For the warranty to be honored, you must install the IP-20V in accordance with the instructions above.

3.5 Surge Protection

IP-20V includes built-in surge protection for its Ethernet and power interfaces. IP-20V's surge protection implementation complies with surge immunity standard IEC 61000-4-5, level 4, provided the Ethernet cables were prepared according to the instructions in *Connecting the Ethernet Cable* on page 50.

In areas in which severe lighting conditions are likely to occur, it is strongly recommended to add additional protection by placing lightning protectors on all electrical Ethernet cables, near the connection points with the IP-20V unit.

Ceragon Proprietary and Confidential

3.6 Available Cable Options

3.6.1 Fiber Optic Cables – Single Mode

Marketing Model	Marketing Description	Item Description
IP-20_FO_SM_LC2LC_ARM_90m	IP-20_FO_SM_LC2LC_ARM_90m	CABLE,FO,DUAL LC TO LC,90M,SM,55mm OPEN END,WITH M28 GLAND,ARMORED,OUTDOOR
IP-20_FO_SM_LC2LC_ARM_80m	IP-20_FO_SM_LC2LC_ARM_80m	CABLE,FO,DUAL LC TO LC,80M,SM,55mm OPEN END,WITH M28 GLAND,ARMORED,OUTDOOR
IP-20_FO_SM_LC2LC_ARM_7m	IP-20_FO_SM_LC2LC_ARM_7m	CABLE,FO,DUAL LC TO LC,7M,SM,55mm OPEN END,WITH M28 GLAND,ARMORED,OUTDOOR
IP-20_FO_SM_LC2LC_ARM_70m	IP-20_FO_SM_LC2LC_ARM_70m	CABLE,FO,DUAL LC TO LC,70M,SM,55mm OPEN END,WITH M28 GLAND,ARMORED,OUTDOOR
IP-20_FO_SM_LC2LC_ARM_60m	IP-20_FO_SM_LC2LC_ARM_60m	CABLE,FO,DUAL LC TO LC,60M,SM,55mm OPEN END,WITH M28 GLAND,ARMORED,OUTDOOR
IP-20_FO_SM_LC2LC_ARM_50m	IP-20_FO_SM_LC2LC_ARM_50m	CABLE,FO,DUAL LC TO LC,50M,SM,55mm OPEN END,WITH M28 GLAND,ARMORED,OUTDOOR
IP-20_FO_SM_LC2LC_ARM_40m	IP-20_FO_SM_LC2LC_ARM_40m	CABLE,FO,DUAL LC TO LC,40M,SM,55mm OPEN END,WITH M28 GLAND,ARMORED,OUTDOOR
IP-20_FO_SM_LC2LC_ARM_30m	IP-20_FO_SM_LC2LC_ARM_30m	CABLE,FO,DUAL LC TO LC,30M,SM,55mm OPEN END,WITH M28 GLAND,ARMORED,OUTDOOR
IP-20_FO_SM_LC2LC_ARM_300m	IP-20_FO_SM_LC2LC_ARM_300m	CABLE,FO,DUAL LC TO LC,300M,SM,55mm OPEN END,WITH M28 GLAND,ARMORED,OUTDOOR
IP-20_FO_SM_LC2LC_ARM_20m	IP-20_FO_SM_LC2LC_ARM_20m	CABLE,FO,DUAL LC TO LC,20M,SM,55mm OPEN END,WITH M28 GLAND,ARMORED,OUTDOOR
IP-20_FO_SM_LC2LC_ARM_200m	IP-20_FO_SM_LC2LC_ARM_200m	CABLE,FO,DUAL LC TO LC,200M,SM,55mm OPEN END,WITH M28 GLAND,ARMORED,OUTDOOR
IP-20_FO_SM_LC2LC_ARM_2.2m	IP-20_FO_SM_LC2LC_ARM_2.2m	CABLE,FO,DUAL LC TO LC,2.2M,SM,55mm OPEN END,WITH M28 GLAND,ARMORED,OUTDOOR
IP-20_FO_SM_LC2LC_ARM_15m	IP-20_FO_SM_LC2LC_ARM_15m	CABLE,FO,DUAL LC TO LC,15M,SM,55mm OPEN END,WITH M28 GLAND,ARMORED,OUTDOOR
IP-20_FO_SM_LC2LC_ARM_150m	IP-20_FO_SM_LC2LC_ARM_150m	CABLE,FO,DUAL LC TO LC,150M,SM,55mm OPEN END,WITH M28 GLAND,ARMORED,OUTDOOR
IP-20_FO_SM_LC2LC_ARM_120m	IP-20_FO_SM_LC2LC_ARM_120m	CABLE,FO,DUAL LC TO LC,120M,SM,55mm OPEN END,WITH M28 GLAND,ARMORED,OUTDOOR
IP-20_FO_SM_LC2LC_ARM_10m	IP-20_FO_SM_LC2LC_ARM_10m	CABLE,FO,DUAL LC TO LC,10M,SM,55mm OPEN END,WITH M28 GLAND,ARMORED,OUTDOOR
IP-20_FO_SM_LC2LC_ARM_100m	IP-20_FO_SM_LC2LC_ARM_100m	CABLE,FO,DUAL LC TO LC,100M,SM,55mm OPEN END,WITH M28 GLAND,ARMORED,OUTDOOR

Ceragon Proprietary and Confidential

3.6.2 Fiber Optic Cables – Multi Mode

Marketing Model	Marketing Description	Item Description
IP-20_FO_MM_LC2LC_ARM_90m	IP-20_FO_MM_LC2LC_ARM_90m	CABLE,FO,DUAL LC TO LC,90M,MM,55mm OPEN END,WITH M28 GLAND,ARMORED,OUTDOOR
IP-20_FO_MM_LC2LC_ARM_80m	IP-20_FO_MM_LC2LC_ARM_80m	CABLE,FO,DUAL LC TO LC,80M,MM,55mm OPEN END,WITH M28 GLAND,ARMORED,OUTDOOR
IP-20_FO_MM_LC2LC_ARM_7m	IP-20_FO_MM_LC2LC_ARM_7m	CABLE,FO,DUAL LC TO LC,7M,MM,55mm OPEN END,WITH M28 GLAND,ARMORED,OUTDOOR
IP-20_FO_MM_LC2LC_ARM_70m	IP-20_FO_MM_LC2LC_ARM_70m	CABLE,FO,DUAL LC TO LC,70M,MM,55mm OPEN END,WITH M28 GLAND,ARMORED,OUTDOOR
IP-20_FO_MM_LC2LC_ARM_60m	IP-20_FO_MM_LC2LC_ARM_60m	CABLE,FO,DUAL LC TO LC,60M,MM,55mm OPEN END,WITH M28 GLAND,ARMORED,OUTDOOR
IP-20_FO_MM_LC2LC_ARM_50m	IP-20_FO_MM_LC2LC_ARM_50m	CABLE,FO,DUAL LC TO LC,50M,MM,55mm OPEN END,WITH M28 GLAND,ARMORED,OUTDOOR
IP-20_FO_MM_LC2LC_ARM_40m	IP-20_FO_MM_LC2LC_ARM_40m	CABLE,FO,DUAL LC TO LC,40M,MM,55mm OPEN END,WITH M28 GLAND,ARMORED,OUTDOOR
IP-20_FO_MM_LC2LC_ARM_30m	IP-20_FO_MM_LC2LC_ARM_30m	CABLE,FO,DUAL LC TO LC,30M,MM,55mm OPEN END,WITH M28 GLAND,ARMORED,OUTDOOR
IP-20_FO_MM_LC2LC_ARM_300m	IP-20_FO_MM_LC2LC_ARM_300m	CABLE,FO,DUAL LC TO LC,300M,MM,55mm OPEN END,WITH M28 GLAND,ARMORED,OUTDOOR
IP-20_FO_MM_LC2LC_ARM_20m	IP-20_FO_MM_LC2LC_ARM_20m	CABLE,FO,DUAL LC TO LC,20M,MM,55mm OPEN END,WITH M28 GLAND,ARMORED,OUTDOOR
IP-20_FO_MM_LC2LC_ARM_200m	IP-20_FO_MM_LC2LC_ARM_200m	CABLE,FO,DUAL LC TO LC,200M,MM,55mm OPEN END,WITH M28 GLAND,ARMORED,OUTDOOR
IP-20_FO_MM_LC2LC_ARM_2.2m	IP-20_FO_MM_LC2LC_ARM_2.2m	CABLE,FO,DUAL LC TO LC,2.2M,MM,55mm OPEN END,WITH M28 GLAND,ARMORED,OUTDOOR
IP-20_FO_MM_LC2LC_ARM_15m	IP-20_FO_MM_LC2LC_ARM_15m	CABLE,FO,DUAL LC TO LC,15M,MM,55mm OPEN END,WITH M28 GLAND,ARMORED,OUTDOOR
IP-20_FO_MM_LC2LC_ARM_150m	IP-20_FO_MM_LC2LC_ARM_150m	CABLE,FO,DUAL LC TO LC,150M,MM,55mm OPEN END,WITH M28 GLAND,ARMORED,OUTDOOR
IP-20_FO_MM_LC2LC_ARM_120m	IP-20_FO_MM_LC2LC_ARM_120m	CABLE,FO,DUAL LC TO LC,120M,MM,55mm OPEN END,WITH M28 GLAND,ARMORED,OUTDOOR
IP-20_FO_MM_LC2LC_ARM_10m	IP-20_FO_MM_LC2LC_ARM_10m	CABLE,FO,DUAL LC TO LC,10M,MM,55mm OPEN END,WITH M28 GLAND,ARMORED,OUTDOOR
IP-20_FO_MM_LC2LC_ARM_100m	IP-20_FO_MM_LC2LC_ARM_100m	CABLE,FO,DUAL LC TO LC,100M,MM,55mm OPEN END,WITH M28 GLAND,ARMORED,OUTDOOR

Ceragon Proprietary and Confidential

3.6.3 DC Cable and Connector

Marketing P/N	Description
Outdoor_DC_cbl_2x18AWG_drum	CABLE,305M,OUTDOOR_DC_CBL_2X18AWG_DRUM
OUTDOOR_DC_CBL_2X14AWG_DRUM	CABLE,305M,OUTDOOR_DC_CBL_2X14AWG_DRUM
IP-20_Mini_Power_Adaptor	IP-20 Mini Power Adaptor

3.6.4 Ethernet Cable and Specifications

Marketing P/N	Description
CAT5E_SFUTP_Outdoor_50m	CABLE,RJ45 TO RJ45 STR 50M,CAT-5E,ETHER,UV RES
CAT5E_SFUTP_Outdoor_75m	CABLE,RJ45 TO RJ45 STR 75M,CAT-5E,ETHER,UV RES
CAT5E_SFUTP_Outdoor_305m_drum	CABLE,MATERIAL,CAT-5E,SFUTP,4X2X24AWG,UV RESISTANCE,305M
CAT5E_Arm_50m	CABLE,RJ45 TO RJ45 STR,50M,CAT-5E,M28 GLAN,ARM,UV RESISTANCE
CAT5E_Arm_70m	CAT5E_Arm_75mCABLE,RJ45 TO RJ45 STR,70M,CAT-5E,M28 GLAN,ARM,UV RESISTANCE
CAT5E_Arm_305m_drum	CABLE,MATERIAL,CAT-5E,FTP,4X2X24AWG,ARMORED,UV RESIST,305M

This cable has the following specifications:

- Suitable for:
  - Fast Ethernet
  - Gigabit Ethernet
  - PoE

The numbers in the figure below refer to the items listed beneath the figure.

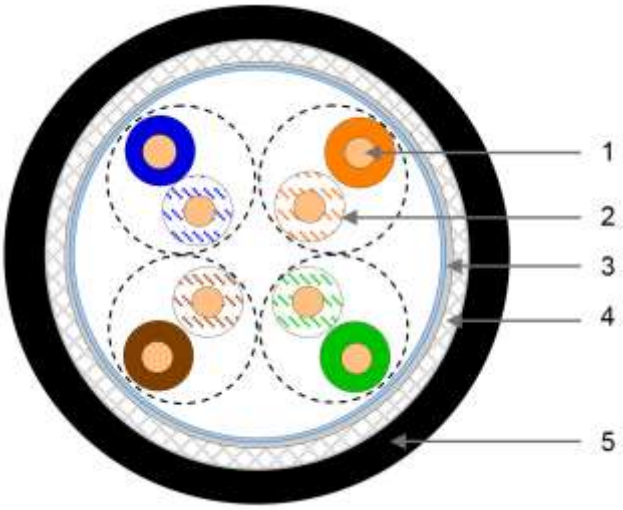

Ceragon Proprietary and Confidential

Figure 13: Cable Design

- [1]Conductor
- [2]Insulation
- [3]Screen: Alu/Pet foil. Alu outside
- [4]Tinned copper braid
- [5]Jacket

Table 8: Ethernet Cable Color Code

Pair	Wire A	Wire B
1	WHITE-blue	BLUE
2	WHITE-orange	ORANGE
3	WHITE-green	GREEN
4	WHITE-brown	BROWN

Ceragon Proprietary and Confidential

3.6.5 Outdoor Ethernet Cable Specifications

Table 9: Outdoor Ethernet Cable Electrical Requirements

Cable type	**CAT-5e SFUTP**, 4 pairs, according to ANSI/TIA/EIA-568-B-2
Wire gage	24 AWG
Stranding	Solid
Voltage rating	70V
Shielding	Tinned copper Braid (Coverage: >=80%) + Aluminum Foil
Pinout	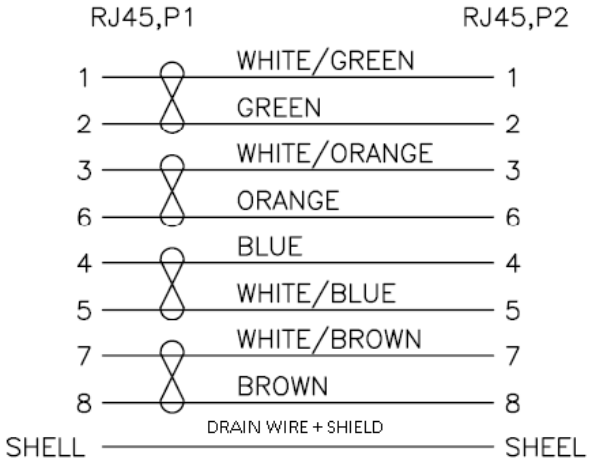

Table 10: Outdoor Ethernet Cable Mechanical/Environmental Requirements

Jacket	UV resistant
Outer diameter	6-7.1 mm (in order to be compatible with the grounding clamp, CAT5E_gnd_kit)
Operating and Storage temperature range	-40°C - 85°C
Flammability rating	According to UL-1581 VW1, IEC 60332-1
RoHS	According to Directive/2002/95/EC

Ceragon Proprietary and Confidential

3.6.6 Outdoor DC Cable Specifications

Table 11: Outdoor DC Cable Electrical Requirements

Cable type	2 tinned copper wires
Wire gage	18 AWG (for ≤150m (492ft) installations, optical connections) 14 AWG (for 150m ÷ 300m (492ft ÷ 984ft) installations, optical connections)
Stranding	stranded
Voltage rating	600V
Spark test	4KV
Dielectric strength	2KV AC min

Table 12: Outdoor DC Cable Mechanical/Environmental Requirements

Jacket	UV resistant
Outer diameter	7-10 mm
Operating & Storage temperature range	-40°C - 85°C
Flammability rating	According to UL-1581 VW1, IEC 60332-1
RoHS	According to Directive/2002/95/EC

3.7 Securing the Cables

All cables should be secured at every meter on-site using either a T-Rups kit, P/N Outdoor Ties (SI-0027-0) or cable clamps. When using the T-Rups kit, take special care to apply the proper amount of force in order to avoid damage to the cable. This is especially important for optical (SFP) cables.

The following cable clamps are available:

Table 13: Cable Clamps

Part Number	Marketing Model	Item Description
SI-1229-0	Fiber_clamp_2cbl_4.0-7.0mm	DUAL FEADER CLAMP FOR 4.0-7.0mm CABLE 2 WAY.
SI-1230-0	Fiber_clamp_4cbl_4.0-7.0mm	DUAL FEADER CLAMP FOR 4.0-7.0mm CABLE 4 WAY.
SI-1231-0	Fiber_clamp_6cbl_4.0-7.0mm	DUAL FEADER CLAMP FOR 4.0-7.0mm CABLE 6 WAY.

Ceragon Proprietary and Confidential

3.8 Special Instructions for use of Glands

Note: Each IP-20V unit is supplied with two glands. If additional glands are required, they must be ordered separately, in kits of five glands each.

Table 14: Glands Kit

Marketing Model	Marketing Description
IP-20_Glands_kit	IP-20_Glands_x5_kit

In addition, gland caps can be ordered to protect the cable and connector from damage when elevating the cable and gland to the radio unit. See Step 5 in Section 3.8.1, *General Installation Procedure*. Gland caps are ordered separately, in kits of 10 caps each.

Table 15: Gland Cap

Marketing Model	Marketing Description
Cable_Prot_10Caps_kit	Cable protective caps kit 10 pcs, IP-20C/S/E

In order to remove the plastic plugs for the unit, you can use the flange of supplied glands to disconnect them as shown in the figures below.

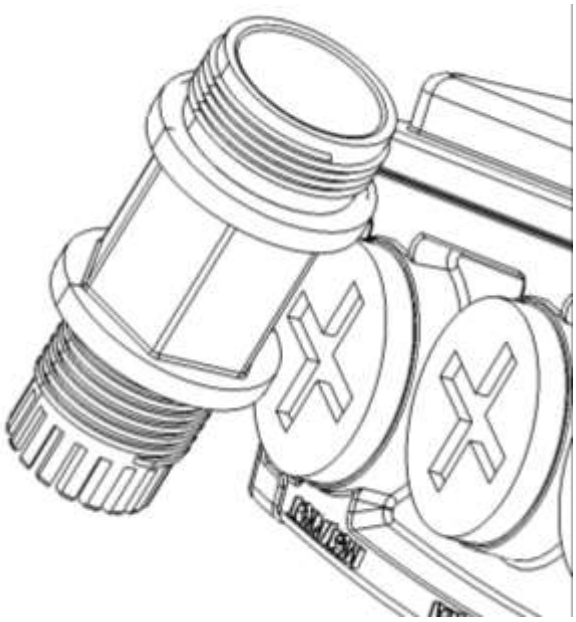

Ceragon Proprietary and Confidential

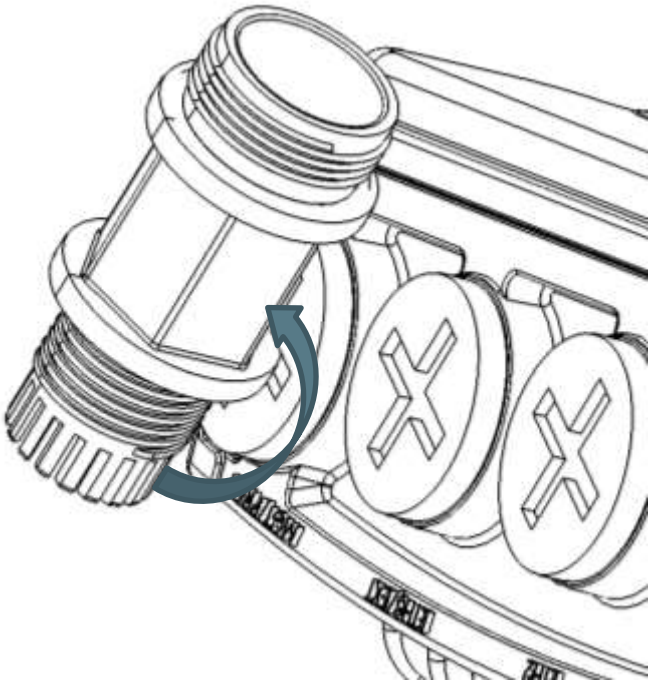

3.8.1 General Installation Procedure

This procedure applies to all cable types, and explains how to install the cables using long glands. The gland is supplied assembled.

When using the power adaptor (see section 2.1.1, *IP-20V Interfaces*), perform these steps to prepare the cable:

1 Strip off a maximum of 20 mm from the cable jacket.
2 Expose 10 mm at the edge of each of the two wires.

For all installations, perform the following steps:

1 Before inserting a cable, you must disassemble the gland cap and gland rubber from the gland body.

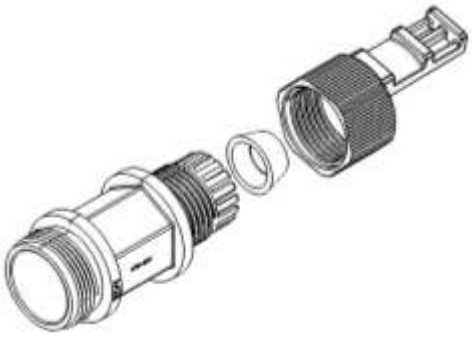

Ceragon Proprietary and Confidential

2 Slide the gland cap into the cable.

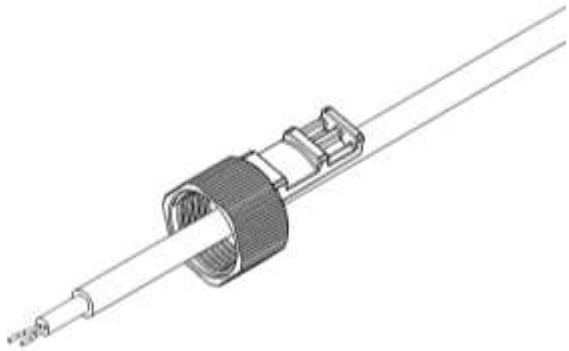

3 Slide the gland rubber into the cable.

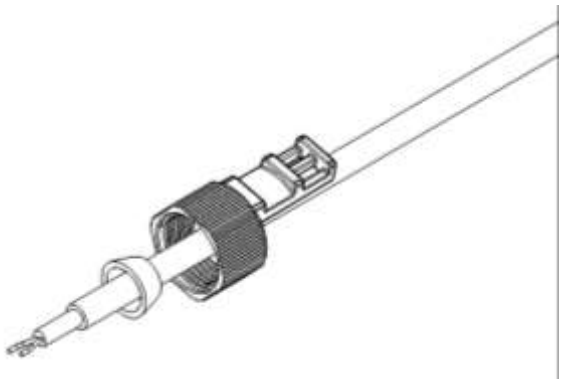

4 Slide the cable into the body of the gland. If you are using a gland cap (see Step 5), make sure to leave enough space for the gland cap to fit into the gland without disturbing the cable.

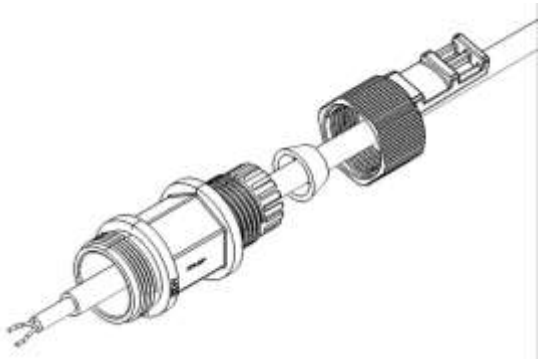

Ceragon Proprietary and Confidential

5 Optionally, after securing the cable into the body of the gland, you can close the other side of the gland with an M28 gland cap. The gland cap protects the cable and connector from damage when elevating the cable and gland to the radio unit.

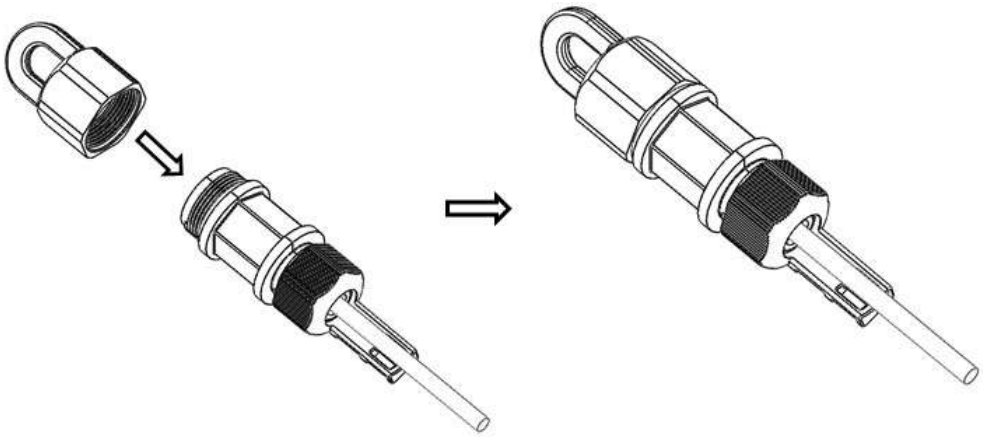

6 The M28 gland cap has hook on top. After attaching the gland cap to the gland, you can connect a rope to the hook and use this to lift the gland and cable up to the radio unit. Before screwing the gland into the radio unit, you must remove the gland cap.

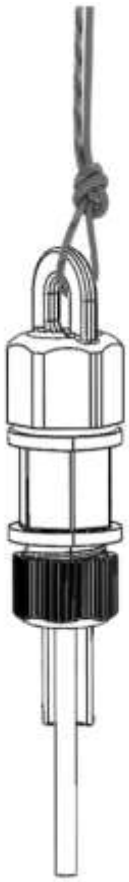

Ceragon Proprietary and Confidential

7 If you used an M28 gland cap to close the gland when raising the gland and cable to the radio unit, remove the gland cap from the gland at this point by unscrewing the cap.
8 Connect the cable to the port.
9 Screw the gland into the radio unit until there is full contact between the gland and the radio unit.

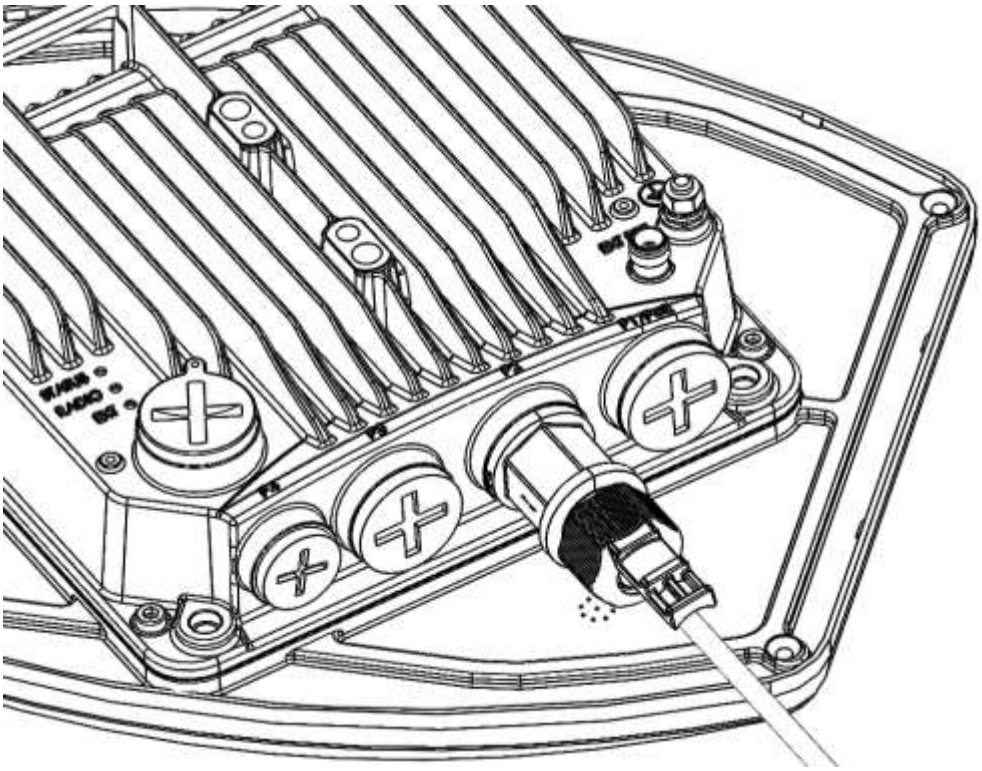

Important Note! Before tightening the gland, make sure the gland is aligned with the tapped hole in the unit. Tightening the gland at an angle can ruin the thread on the gland and prevent proper sealing of the interface.

10 Insert the main part of the gland into the thread in the radio body and tighten until there is full contact and the gasket is fully contained between the gland and the radio and cannot be seen. Tighten the gland gently and make sure there is no resistance. If there is resistance, stop immediately, and thread out the gland. Verify that the gland thread is not damaged and tighten the gland again.

Important Note! Pay attention that the gland rubber is properly located and not damaged during the tightening of the gland cap.
If the gland thread is damaged do not use it!

Ceragon Proprietary and Confidential

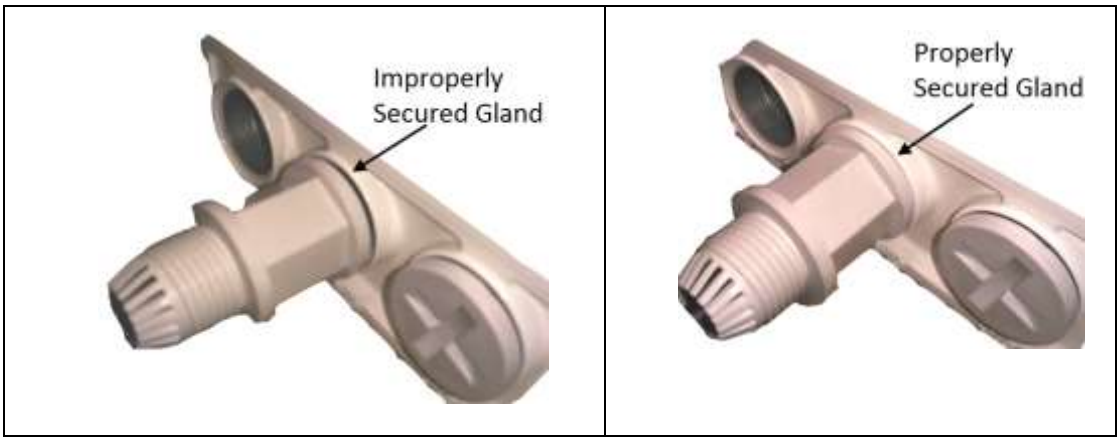

11 Tighten the rear portion of the gland onto the main part of the gland and make sure that the main part of the gland does not have an additional swivel after the rear portion is secured.

Note: If the main portion of the gland is rotated while the rear portion is seizing the cable, this may ruin the cable connector.

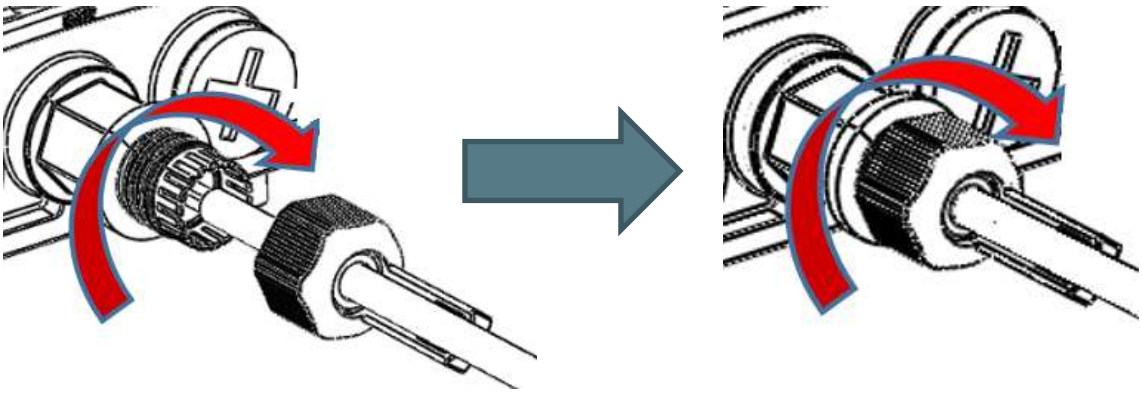

Figure 14: Tightening the Front Portion of the Gland *Figure 15: Tightening the Rear Portion of the Gland*

Ceragon Proprietary and Confidential

12 Secure the cable to the lip of the gland using a tie wrap.

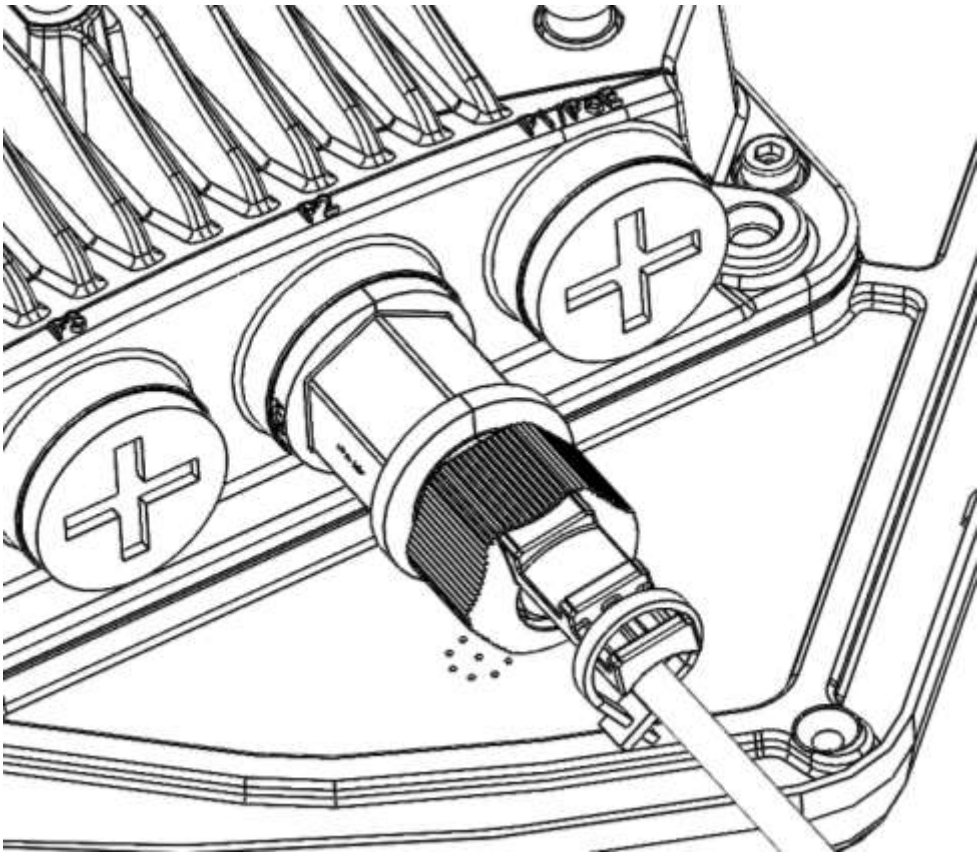

Ceragon Proprietary and Confidential

3.9 Connecting an Optical Fiber Cable and SFP

3.9.1 Types of SFPs

The IP-20V includes an SFP cage that supports regular SFP and CSFP standards:

- Regular SFP provides a single Ethernet interface: ETH2. This interface uses two optical fiber cables (one for TX and one for RX).
- CSFP (Dual BiDi SFP) provides two Ethernet interfaces: ETH2 and ETH3. These interfaces use a single optical fiber cable per interface, multiplexing TX and RX on the same cable using different wavelengths for TX and RX.

When a Dual BiDi CSFP is used, a single-fiber BiDi CSFP must be used for the third party equipment connected to the CSFP ports, with opposite wavelengths for TX and RX. The following table provides an example of a valid CSFP-SFP pair in which TX=1310nm and RX=1490nm for the CSFP connected to the IP-20V, and TX=1490nm and RX=1310nm for the SFP connected to the third party equipment.

Table 16: CSFP – SFP Compatibility Example

	P/N	Marketing Model	Description
IP-20V	AO-0232-0	CSFP_BiDi_1G_TXL _EXT_TEMP	XCVR,CSFP,1310nm TX/1490nm RX,SM,1.25Gbit/s,10km,W.DDM,INDUSTRIAL GRADE,SINGLE PACK
Third Party Equipment	AO-0194-0	SFP-BX-D-OPT	XCVR,SFP,SINGLE FIBER,1490nm TX/1310nm RX,1.25Gb,SM,10km,W.DDM,**COMMERCIAL**,SINGLE PACK KIT

The following table lists recommended SFP modules that can be used with IP-20V.

Table 17: SFP Module Recommendations

Part Number	Marketing Model	Item Description
AO-0098-0	SFP-GE-SX-EXT-TEMP	XCVR,SFP,850nm,MM,1.0625 Gbit/s FC/ 1.25 GBE, INDUSTRIAL GRADE,SINGLE PACK KIT
AO-0097-0	SFP-GE-LX-EXT-TEMP	XCVR,SFP,1310nm,1.25Gb,SM,10km,W.DDM,INDUSTRIAL GRADE,SINGLE PACK KIT
AO-0228-0	SFP-GE-COPER-EXT-TMP-LOS-DIS	XCVR,SFP,COOPER 1000BASE-T,RX_LOS DISABLE,INDUSTRIAL TEMP

Ceragon Proprietary and Confidential

The following table lists recommended CSFP modules that can be used with IP-20V.

Table 18: CSFP Module Recommendations

Part Number	Marketing Model	Item Description
AO-0232-0	CSFP_BiDi_1G_TXL_EXT_TEMP	XCVR,CSFP,1310nm TX/1490nm RX,SM,1.25Gbit/s,10km,W.DDM,INDUSTRIAL GRADE,SINGLE PACK
AO-0231-0	CSFP_BiDi_1G_TXH_EXT_TEMP	XCVR,CSFP,1490nm TX/1310nm RX,SM,1.25Gbit/s,10km,W.DDM,INDUSTRIAL GRADE,SINGLE PACK

The following table lists recommended SFP modules that can be used with third party equipment connected to a CSFP module on the IP-20V.

Table 19: SFP Module Recommendations for Third Party Equipment

Part Number	Marketing Model	Item Description
AO-0194-0	SFP-BX-D-OPT	XCVR,SFP,SINGLE FIBER,1490nm TX/1310nm RX,1.25Gb,SM,10km,W.DDM,**COMMERCIAL**,SINGLE PACK KIT
AO-0193-0	SFP-BX-U-OPT	XCVR,SFP,SINGLE FIBER,1310nm TX/1490nm RX,1.25Gb,SM,10km,W.DDM,**COMMERCIAL**,SINGLE PACK KIT

The following table lists recommended SFP+ modules that can be used with the 10G port.

Table 20: Approved 10 GbE SFP+ Modules

Part Number	Marketing Model	Marketing Description	Item Description
AO-0221-0	MIMO_SFP_10G	MIMO_SFP_10G	XCVR,SFP+,850nm,MM,10 Gbit/s, INDUSTRIAL GRADE
AO-0264-0	SFP+10GBASE-LR10-EXT-TEMP	SFP+ 10GE OPT 10GBASE-LR,10km,EXT-TEMP	XCVR,SFP+,1310nm,SM,10 Gbit/s,10km,INDUSTRIAL GRADE,SINGLE P

Note: Ceragon recommends the use of SFP and SFP+ modules certified by Ceragon, as listed above.

Ceragon Proprietary and Confidential

3.9.2 Connecting Optical Fiber to SFPs

To connect an optical fiber cable and the SFP transceiver:

1 Use a pre-assembled cable.

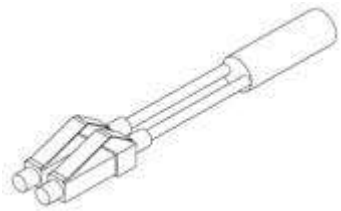

2 Split the connector into two separate LC connectors (one for each fiber).

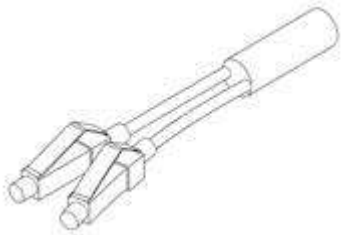

3 Remove the gland cap and rubber from the gland body.

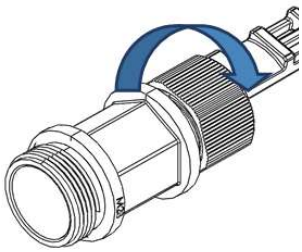

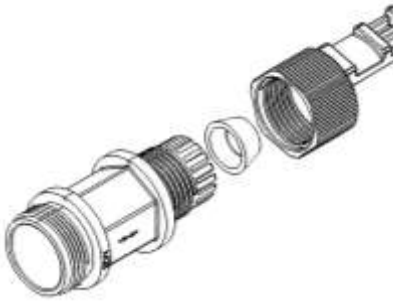

4 Slide the gland cap into the cable.
5 Slide the rubber into the cable.

Ceragon Proprietary and Confidential

6 Insert the fibers with the connectors one by one into the cable gland.

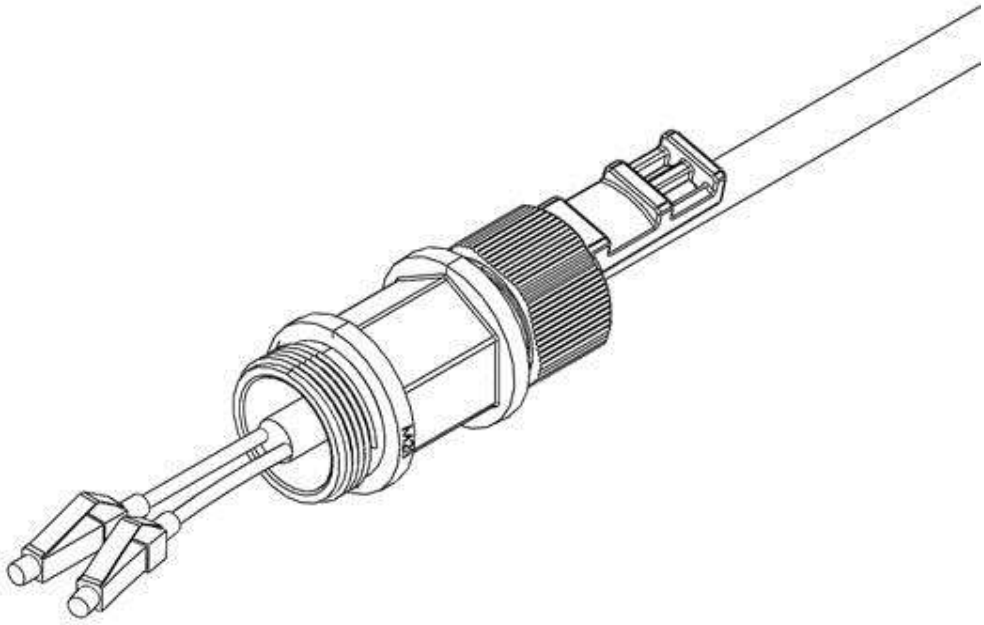

7 Secure the cable to the lip of the gland using a tie wrap.

Important Note: If you are raising the cable to a radio unit on a tower, this step is crucial to prevent the cable from slipping from the gland, which could damage the connector.

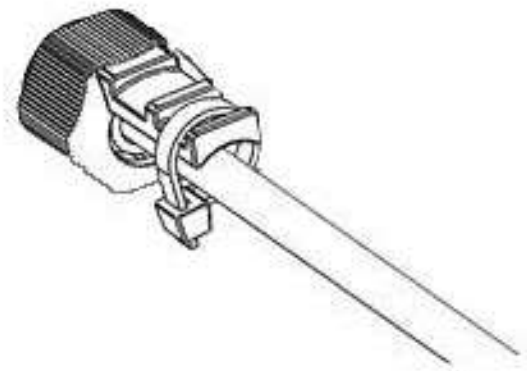

Ceragon Proprietary and Confidential

8 Connect the fibers to the SFP transceiver. Listen for the “click” to ensure that they are fully inserted.

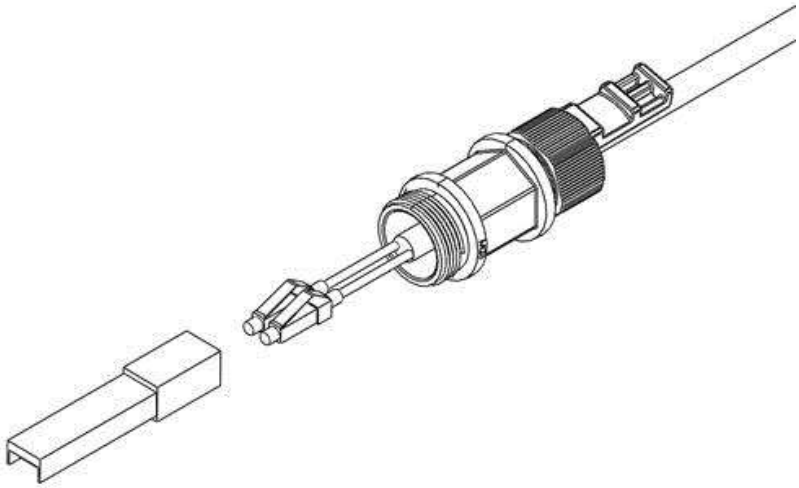

9 Remove the tie wrap securing the cable to the gland.

Note: A new tie wrap must be used to secure the cable to the gland at the end of the procedure, as described in Step 13.

10 Connect the connector into the IP-20V connector.

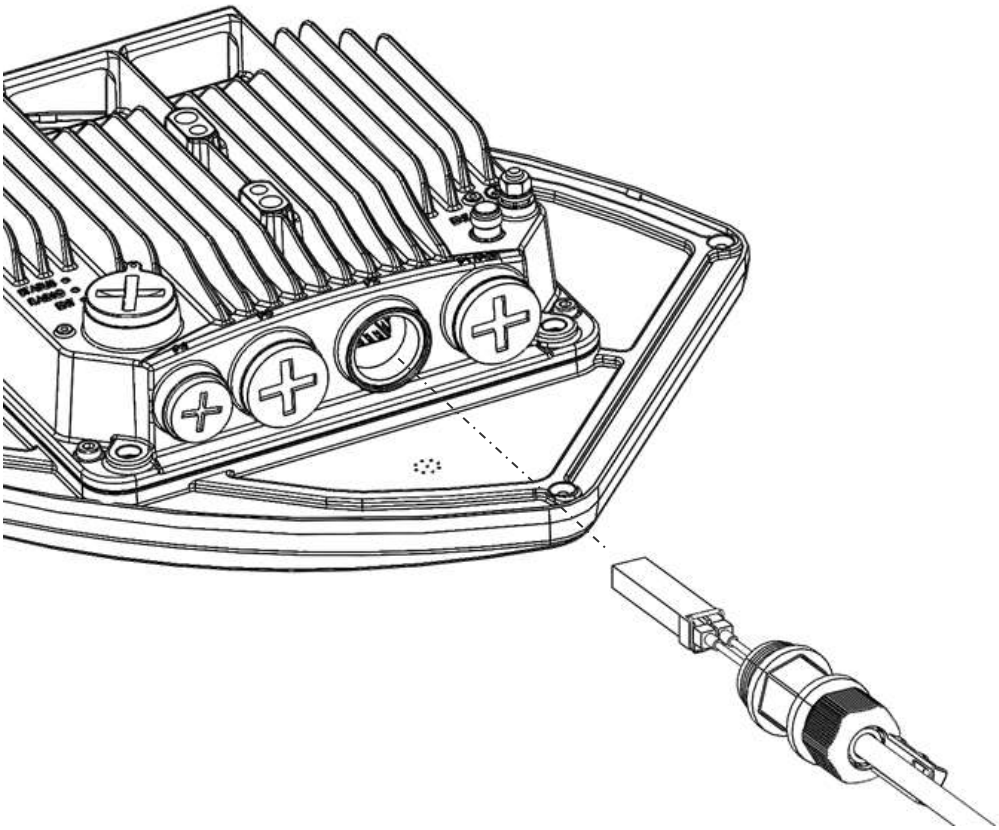

Ceragon Proprietary and Confidential

11 Tighten the gland to the radio unit until there is full contact between the gland and the radio unit.
12 Tighten the gland cap.

Important Note! Before tightening the gland, make sure the gland is aligned with the tapped hole in the unit.

Tightening the gland at an angle can ruin the thread on the gland and prevent proper sealing of the interface Tighten the gland gently and make sure there is no resistance. If there is resistance, stop immediately, thread out the gland, and verify that the gland threads are not damaged. Then, tighten the gland again.

If the gland thread is damaged do not use it!

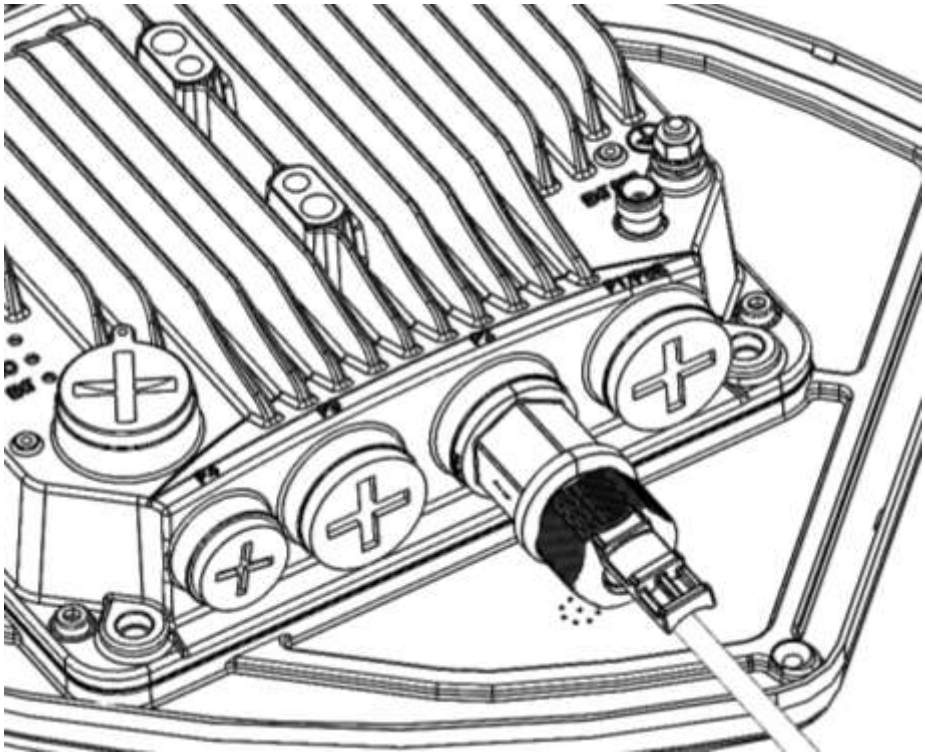

Ceragon Proprietary and Confidential

13 Secure the cable to the gland using a tie wrap.

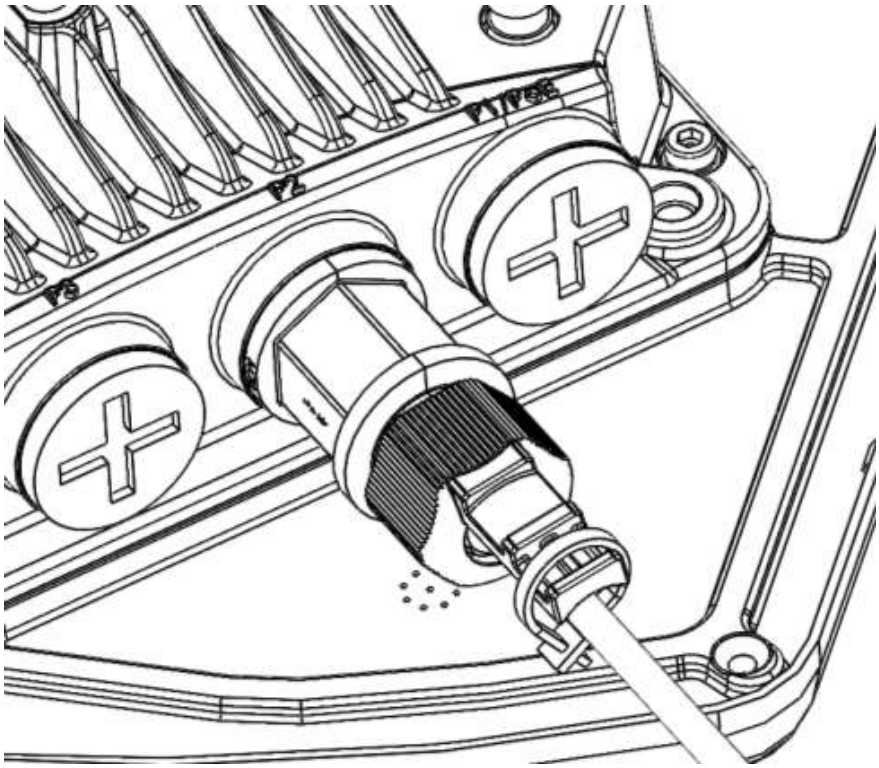

Ceragon Proprietary and Confidential

3.10 Connecting a DC Power Cable

Note: The DC power cable and connector must be ordered separately. See *DC Cable and Connector* on page 29.

To connect a DC power cable:

1 Strip off 45 mm from the cable jacket.
2 Expose 10 mm at the edge of each of the two wires.

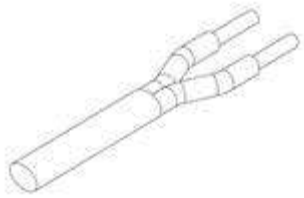

3 Insert the power cable into the gland.

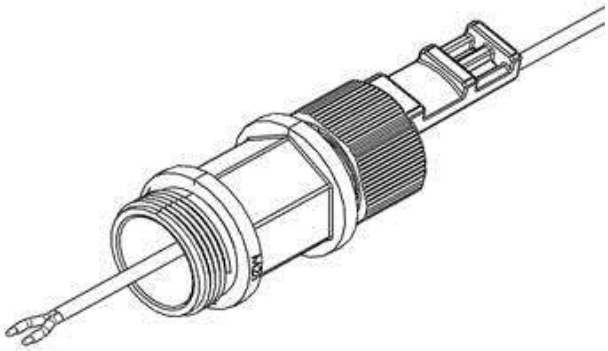

4 Insert the power cable wires into the power connector.
5 Insert the power cable wires into the power connector. Match “+” to the 0V wire and “-“ to the -48V wire, and tighten the screws with a flat screwdriver.

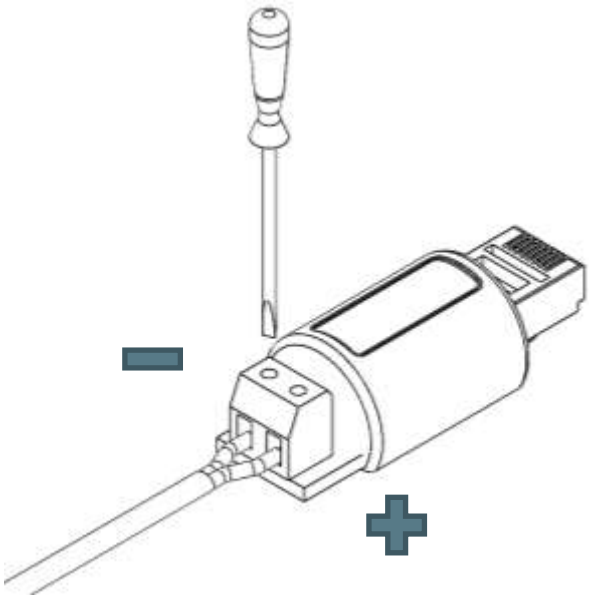

Ceragon Proprietary and Confidential

6 Plug the power cable with connector into the IP-20V power connector.

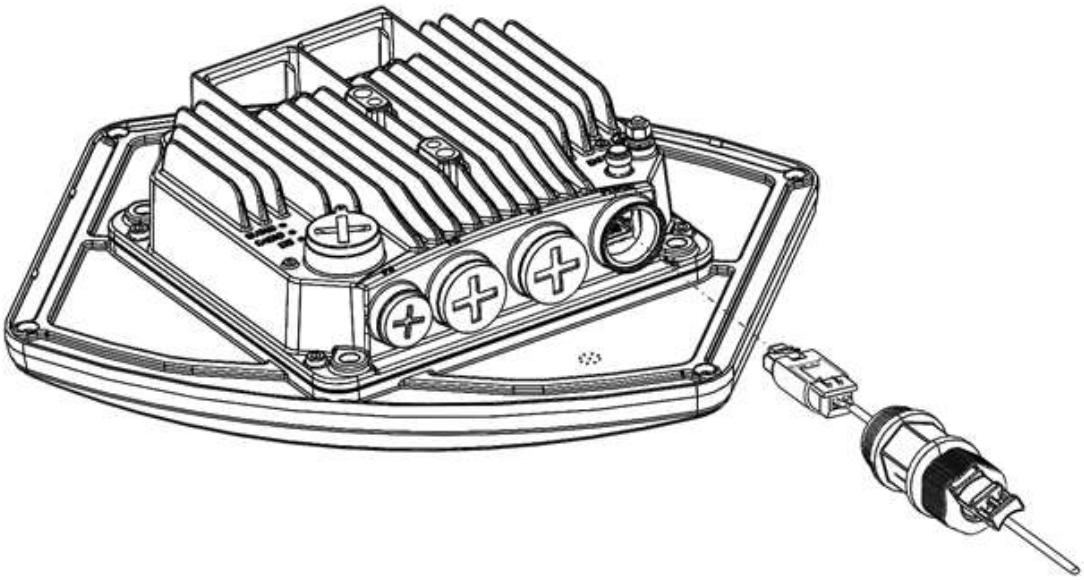

7 Screw the gland into the radio unit

Important Note! Before tightening the gland, make sure the gland is even with the cover. Tighten the gland gently and make sure there is no resistance. If there is resistance, stop immediately and verify that the gland is not being inserted at an angle. Tightening the gland at an angle can ruin the thread on the gland and prevent proper sealing of the interface.

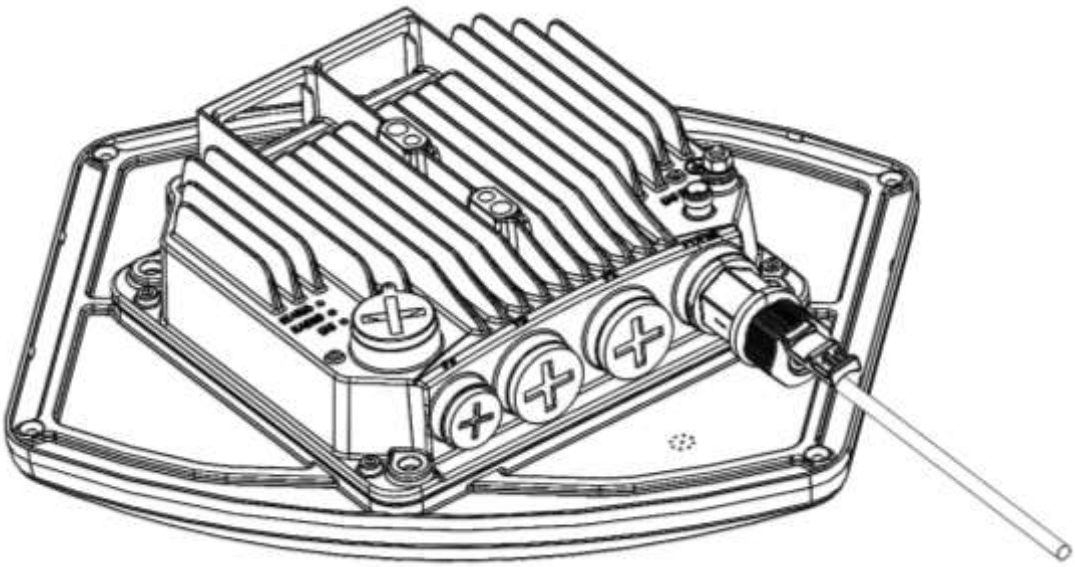

Ceragon Proprietary and Confidential

10 Tighten the gland cap.
11 Secure the cable to the gland with a tie wrap.

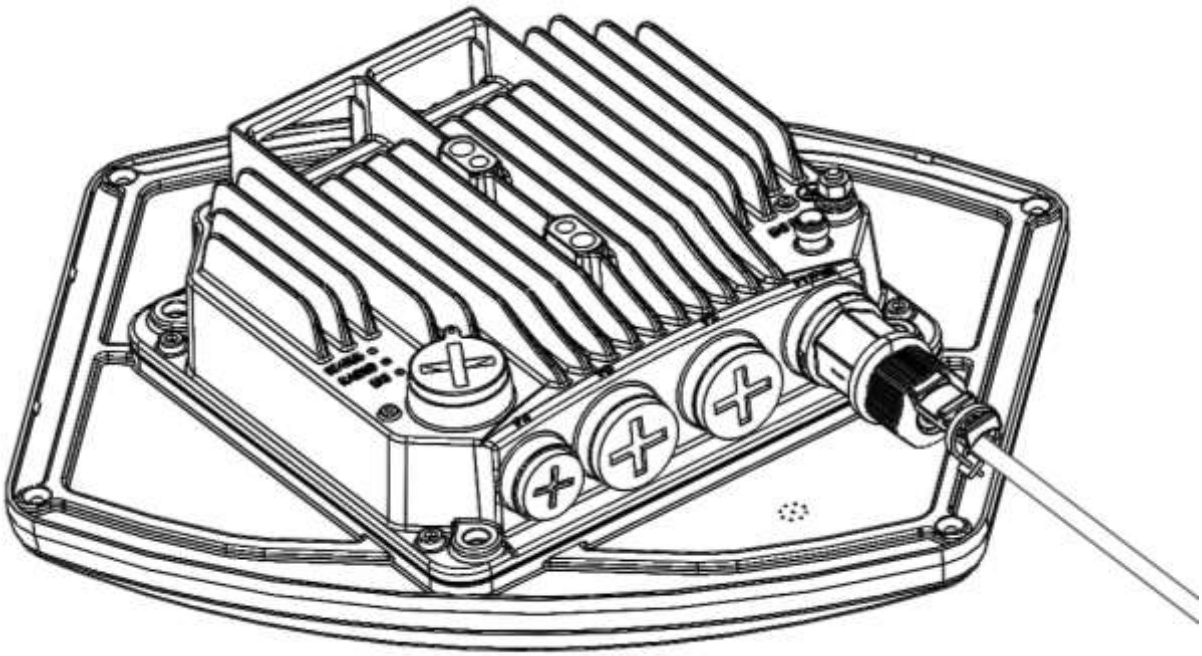

Ceragon Proprietary and Confidential

3.11 Connecting the Ethernet Cable

If you need to assemble the Ethernet cable, follow the instructions in section 3.11.1, *Preparing the Ethernet Cable and Plug-in Field*, then proceed to section 3.11.3, *Connection of Ethernet Cable to IP-20V*.

If you are using a pre-assembled Ethernet cable, follow the instructions in section 3.11.2, *Preparing the Ethernet Cable Already Assembled*, then proceed to section 3.11.3, *Connection of Ethernet Cable to IP-20V*.

Note: To ensure proper grounding and connectivity, it is recommended to use pre-assembled Ethernet cables.

3.11.1 Preparing the Ethernet Cable and Plug-in Field

Important Note: To ensure proper grounding, the RJ-45 plug must be shielded, with a crimping tail.

Table 21: Materials for Preparing Ethernet Data Cables

Marketing P/N	Description
CAT5E_SFUTP_Outdoor_50m	CABLE,RJ45 TO RJ45 STR 50M,CAT-5E,ETHER,UV RES
CAT5E_SFUTP_Outdoor_75m	CABLE,RJ45 TO RJ45 STR 75M,CAT-5E,ETHER,UV RES
CAT5E_SFUTP_Outdoor_100m_drum	CABLE,MATERIAL,CAT-5E,SFUTP,4X2X24AWG,UV RESISTANCE,100M
CAT5E_SFUTP_Outdoor_305m_drum	CABLE,MATERIAL,CAT-5E,SFUTP,4X2X24AWG,UV RESISTANCE,305M
IP-20_Glands_kit	KIT 5pcs of M28 GLAND (AA-0597-0)
CAT5E_gnd_kit	High speed GND KIT for CAT5e SF/UTP 5.9-7.1mm outdoor cable
GBE_connector_kit	RJ45 CAT5E CONNECTORS AND BOOTS KIT (package of 10 connectors)

To prepare the Ethernet cable and plug-in field:

1 Prepare the gland and insert the cable, as described in *General Installation Procedure* on page 34.
2 Strip off approximately 45 mm of the outer insulation jacket from the CAT5E cable.

Ceragon Proprietary and Confidential

3 Do not strip off the end of the cable shield, but rather, twist the shield to form a braid.

4 Roll back the foil shield insulation and wrap the drain wire around the foil. Do not remove any insulation from the conductors.
5 Align the colored wires.

Note:	Cord colors should be matched to the same pins on both ends of the cable.

6 Trim all wires to the same length. About 12 mm on the left should be exposed from the inner sheath.
7 Separate the wires and place the twisted shield between the separated wires.

8 Insert the wires into the RJ45 plug. Verify that each wire is fully inserted into the front of the RJ45 plug and in the correct order, according to the pinouts shown in Section 3.6.5, *Outdoor Ethernet Cable Specifications*. The sheath of the Ethernet cable should extend into the plug by about 13 mm and held in place by the crimp.
9 Extend the cable jacket with the shield into the connector about 5 mm for strain relief and shielding connection.

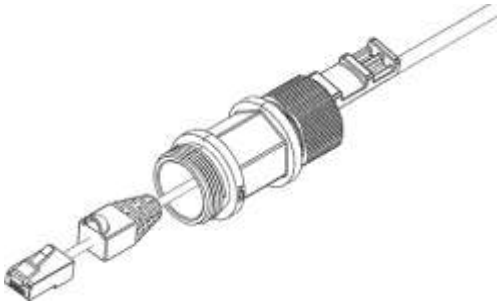

Ceragon Proprietary and Confidential

10 Wrap the twisted braid firmly around the cable jacket and let the crimping tail of the RJ45 plug envelop it.

Important Note! To ensure proper grounding, it is essential that the twisted braid be firmly connected to the RJ45 plug.

11 Crimp the RJ45 plug with the crimp tool. Make sure the twisted shield is crimped firmly to the RJ45 plug.

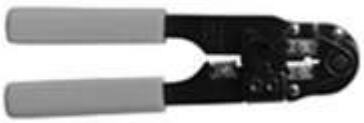

12 Verify that the wires ended up the correct order and that the wires extend to the front of the RJ45 plug and make good contact with the metal contacts in the RJ45 plug.
13 Push back the CAT5E plug cover on the connector plug.

Note: It is recommended that the newly prepared cable be tested with a Cable Analyzer such as the FLUKE DTX-1800 (or the equivalent), to make sure the cable complies with ANSI/TIA/EIA-568-B-2. Make sure to verify both connectivity and grounding continuity at both ends of the cable.

3.11.2 Preparing the Ethernet Cable Already Assembled

To prepare the Ethernet cable already assembled:

1 Release the gland cap and the gland rubber slightly.

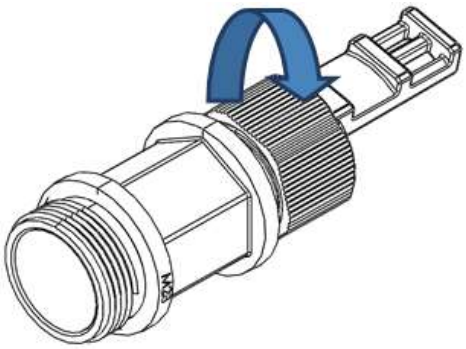

Ceragon Proprietary and Confidential

2 Insert the CAT5E cable into the gland cap and into the rubber gland.

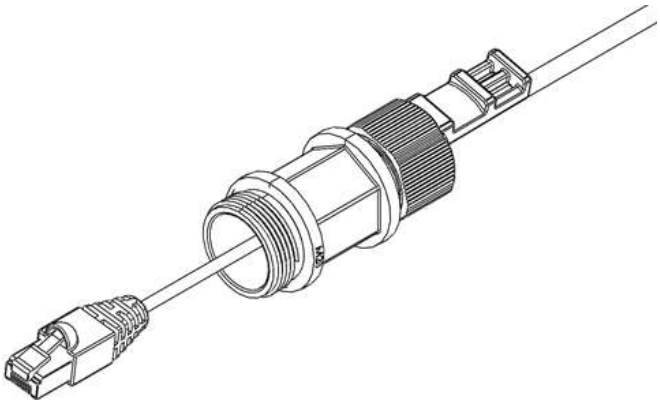

3 Insert the CAT5e cable into the gland body.

3.11.3 Connection of Ethernet Cable to IP-20V

To connect the Ethernet cable to the IP-20V:

1 Remove the relevant cap from the IP-20V radio. You can use the side of the gland to unscrew the cap.

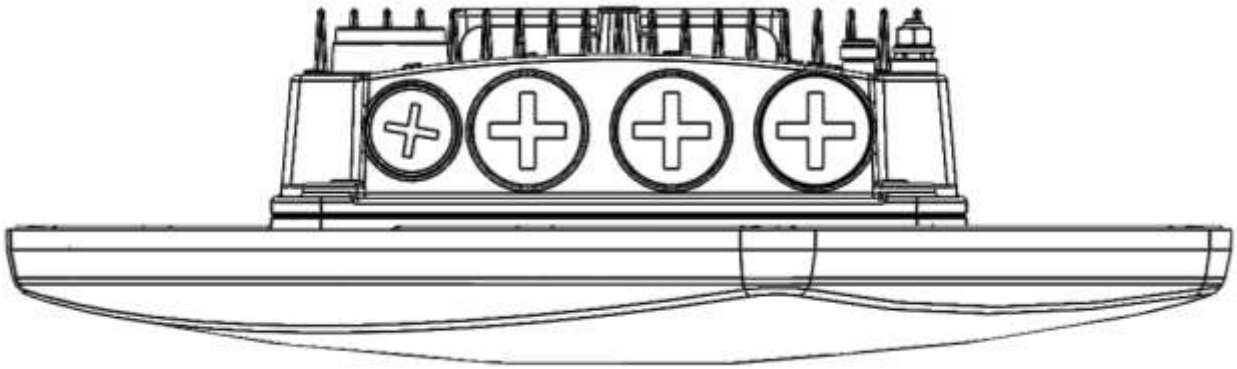

2 Connect the CAT5E cable to the IP-20V.

Ceragon Proprietary and Confidential

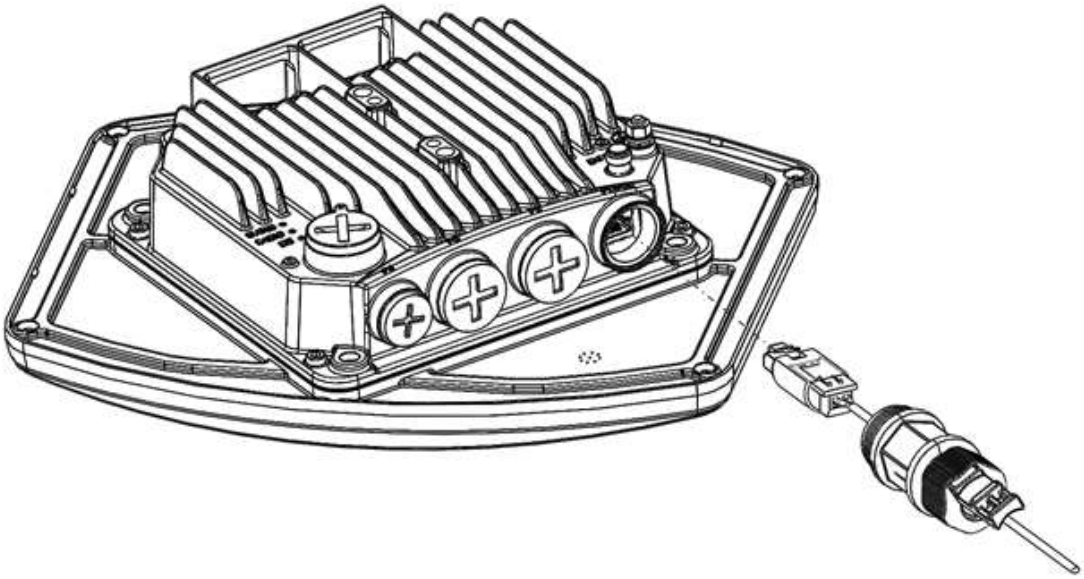

Ceragon Proprietary and Confidential

3 Screw the gland into the radio unit.

Important Note! Before tightening the gland, make sure the gland is even with the cover. Tighten the gland gently and make sure there is no resistance. If there is resistance, stop immediately and verify that the gland is not being inserted at an angle. Tightening the gland at an angle can ruin the thread on the gland and prevent proper sealing of the interface.

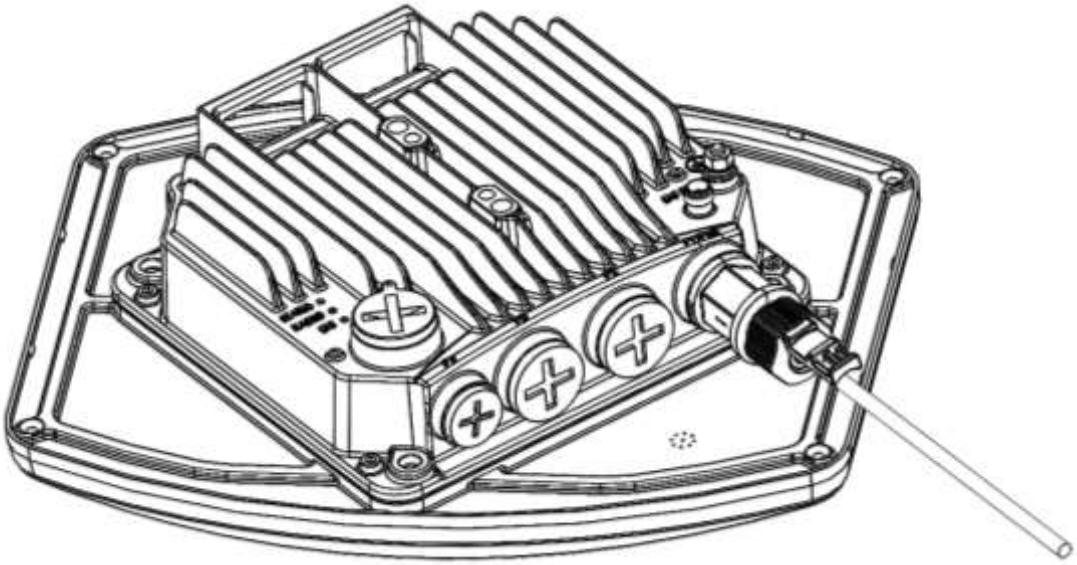

4 Tighten the gland cap.
5 Secure the cable to the gland using a tie wrap.

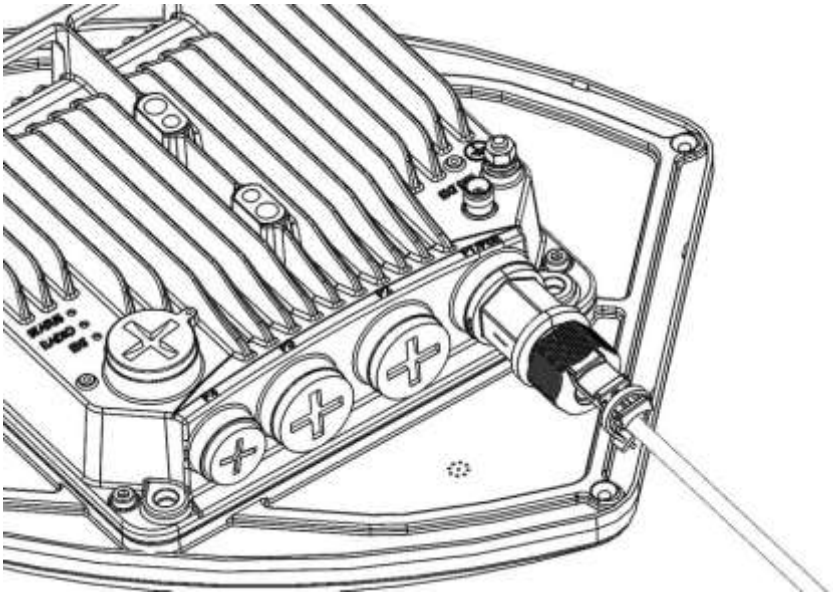

Ceragon Proprietary and Confidential

4. PoE Injector Installation and Connection

4.1 PoE Injector Cable Connection

The PoE Injector cables are connected similar to the IP-20V cables.

- To connect an Ethernet (CAT5e) cable to the PoE port, refer to *Connection of Ethernet Cable to IP-20V* on page 53.
- To connect a DC power cable to the power port, refer to *Connecting a DC Power Cable* on page 47. This cable is not supplied with the PoE Injector.
- The total length of the cable between the IP-20V port and the Switch/Router the device is connected to should not exceed 100m/328ft. This length includes the connection between the IP-20V and the PoE Injector (X1 + X2 ≤ 100m/328ft in the figure below).

Note: The length of the cable connecting the customer equipment to the PoE injector should not be longer than 10m (according to ANSI/TIA-568 standard).

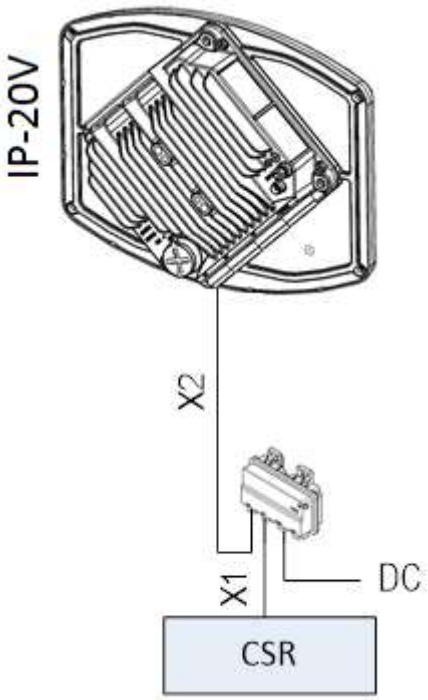

Note! For the warranty to be honored, the connection must be through the glands only. Do not open the PoE injector box cover.

Ceragon Proprietary and Confidential

4.2 PoE Injector Grounding

To ground the PoE Injector:

1 On the right side of each PoE Injector, loosen the screw, plain washer, and serrated washer.
2 Place the cable lug (supplied with the PoE injector kit) between the plain and serrated washer.
3 Tighten the screw.
4 Perform a resistance test between the 2 lugs of the GND cable. Verify that the result is 0-2 ohms.

4.3 PoE Injector Wall Mount Installation

List of Items

Item	Description	Quantity	Remarks
1	PoE Injector	1	
1	Glands Kit	1	For outdoor installations.

Note: Glands are required for outdoor installations. The glands kit (three or five glands) is not supplied with the PoE Injector, and must be ordered separately.

Glands Kit

Marketing Model	Marketing Description
IP-20_3xGlands_kit	IP-20_3xGlands_kit
IP-20_Glands_kit	IP-20_Glands_x5_kit

Required Tools

- Metric offset wrench key wrench set
- Hammer
- Drilling Machine

Procedure

1 Mount and tighten the PoE Injector to a wall using two M6 bolts and anchors. The M6 bolts and anchors must be purchased separately.

Note: Use Anchor Stainless Steel with flanged Hexagonal nut M6X70.

2 Drill two 6mm diameter holes with 100mm distance between the center of the holes.
3 Insert the anchors with the bolts.
4 Place the washers on the bolt.

Ceragon Proprietary and Confidential

5 Tighten the nuts.

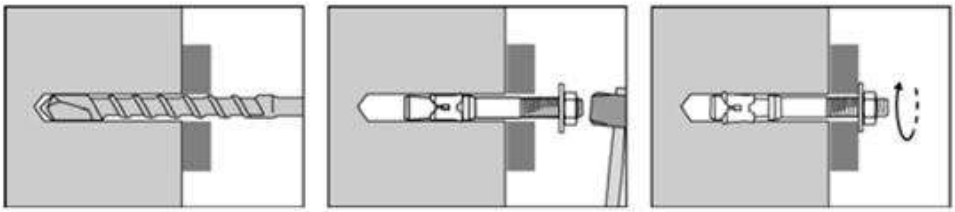

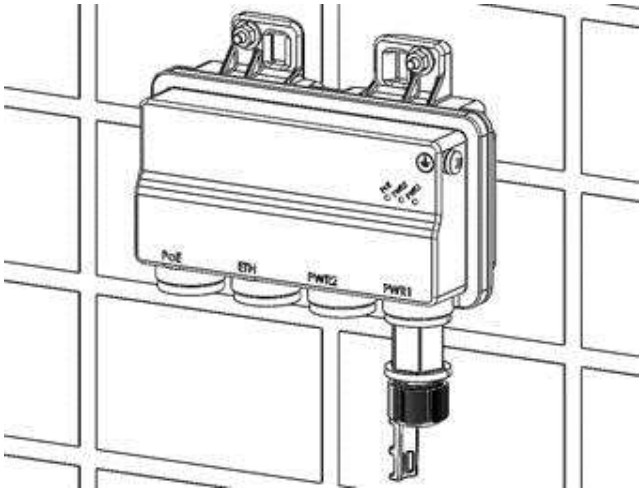

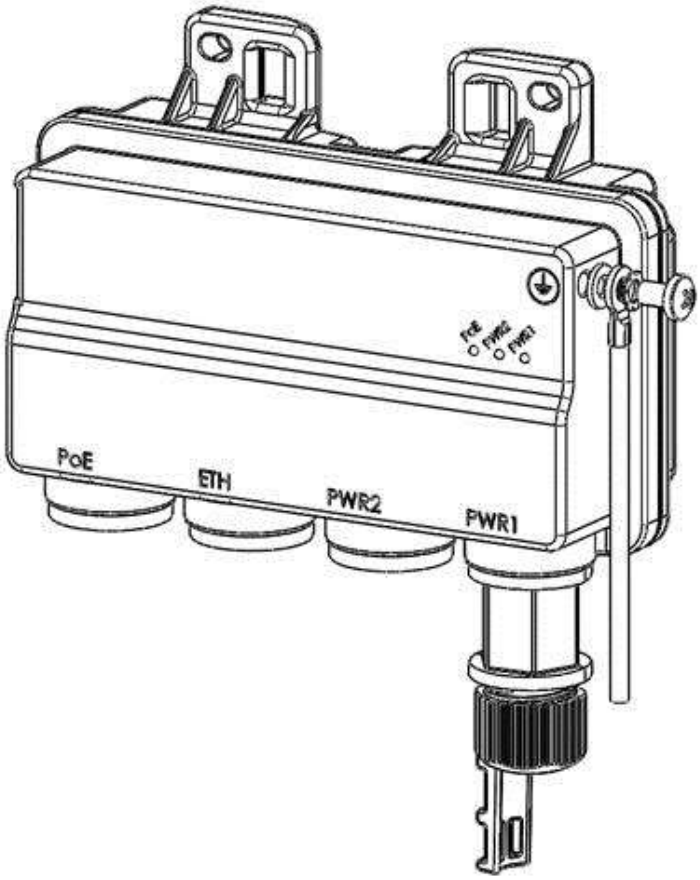

Ceragon Proprietary and Confidential

4.4 PoE Injector Pole Mount Installation

List of Items

Item	Description	Quantity	Remarks
1	PoE Injector	1	

Required Tools

- Slot Screwdriver

Procedure

To mount the PoE Injector on a pole:

1 Mount and tighten the PoE Injector to a pole with a diameter of 114 mm using a stainless steel hose clamp.
2 Pass the hose clamp through the pole mount slots.

Note! The Hose Clamp is not supplied with PoE injector kit.

3 Attach the PoE injector to the pole.
4 Connect the ends of the hose clamp.
5 Tighten the hose clamp using the captive screw.

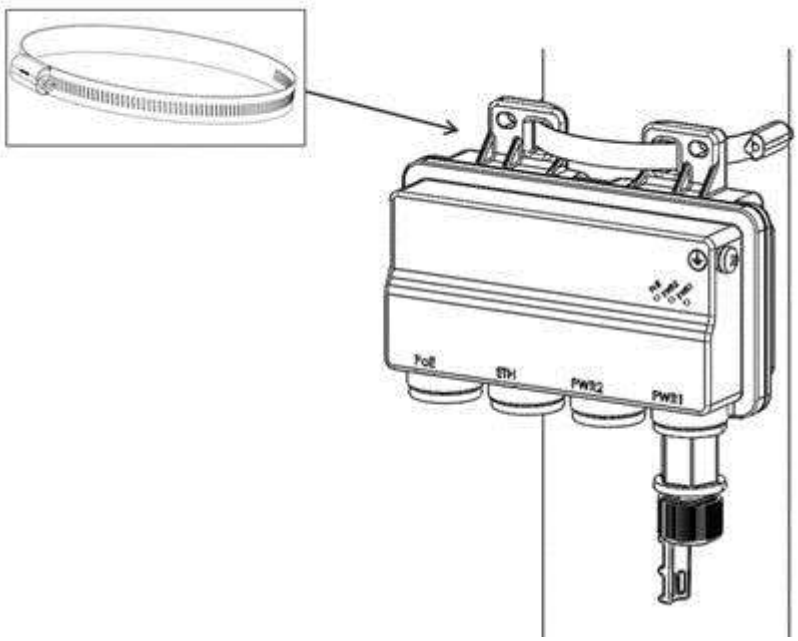

Ceragon Proprietary and Confidential

4.5 PoE Injector 19” Rack Installation

List of Items

Item	Description	Quantity	Remarks
1	PoE Injector	1	
2	PoE Injector 19” Rack Mount Kit	1	

Required Tools

- Philips Screwdriver

To mount the PoE Injector on a rack:

1 Mount the PoE Injector to a 19” rack using a 19” rack adaptor.
2 Mount the PoE Injector on the 19” adaptor through the wall mounting holes, using M6 screws and washers.

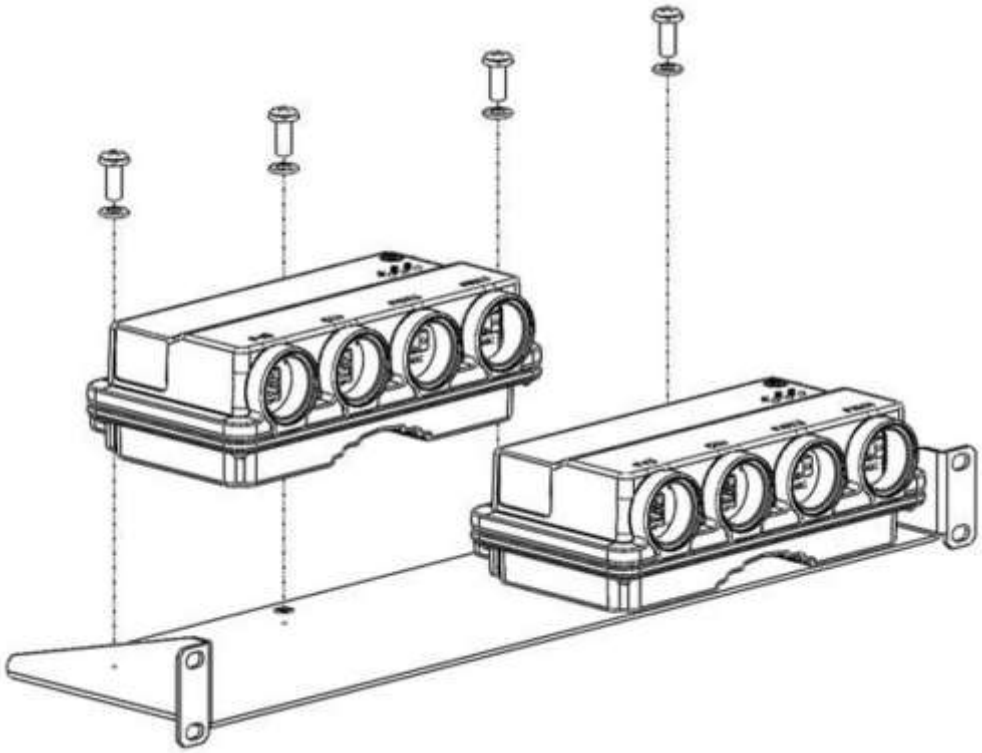

3 Mount the 19” rack adaptor to a 19” rack using four M6 screws and cage nuts.

Ceragon Proprietary and Confidential

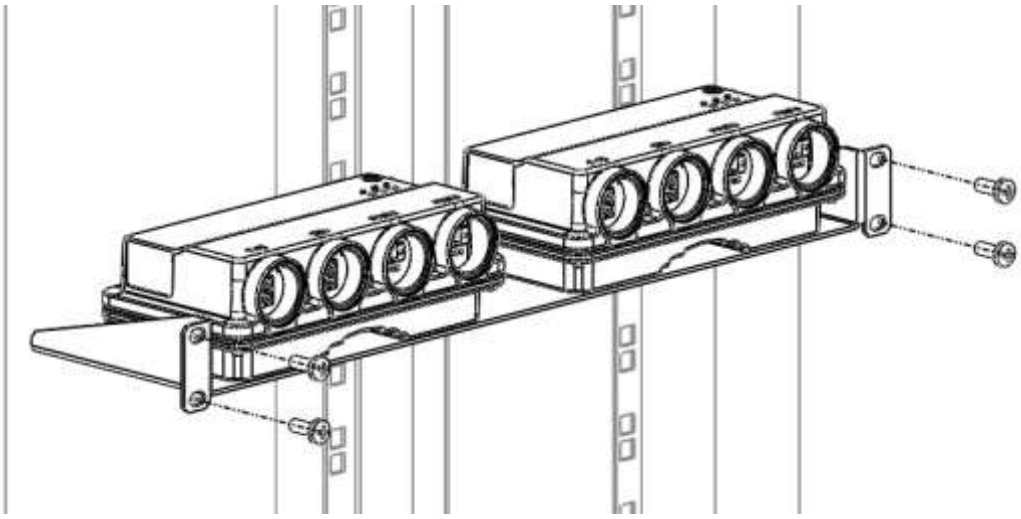

4.6 PoE Injector ETSI Rack Installation

List of Items

Item	Description	Quantity	Remarks
1	PoE Injector	1	
2	PoE Injector ETSI Rack Mount Kit	1	

Required Tools

- Philips Screwdriver

To mount the PoE Injector to an ETSI rack:

1 Mount the PoE Injector to an ETSI rack using a 19” rack adaptor and ETSI adapting ears.
2 Connect the ETSI adapting ears to a 19” rack adaptor using four M6 screws.

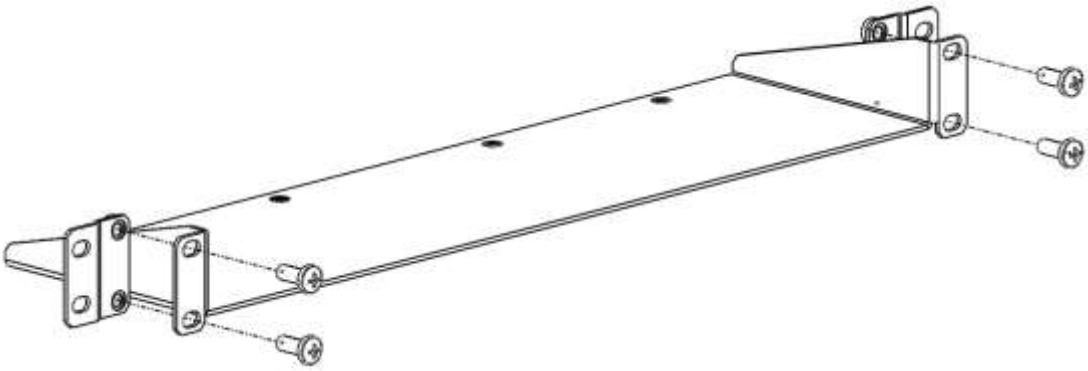

Ceragon Proprietary and Confidential

3 Mount the PoE Injector on the adaptor through the wall mounting holes using M6 screws and washers.

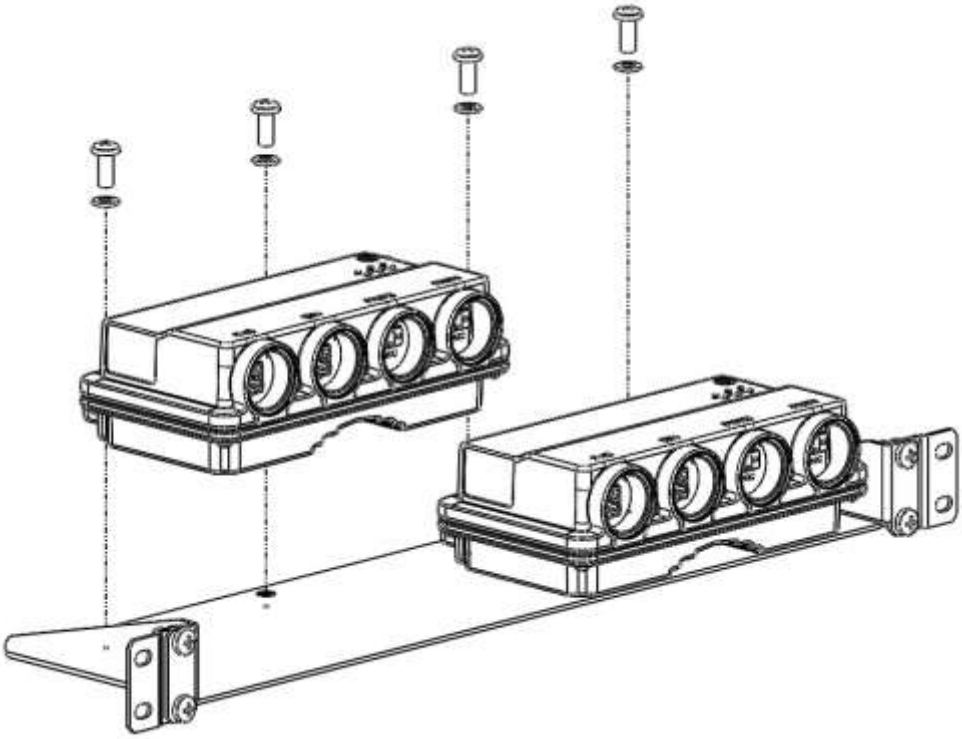

4 Mount the 19” rack adaptor with the ETSI ears on the ETSI rack using four M6 screws and cage nuts.

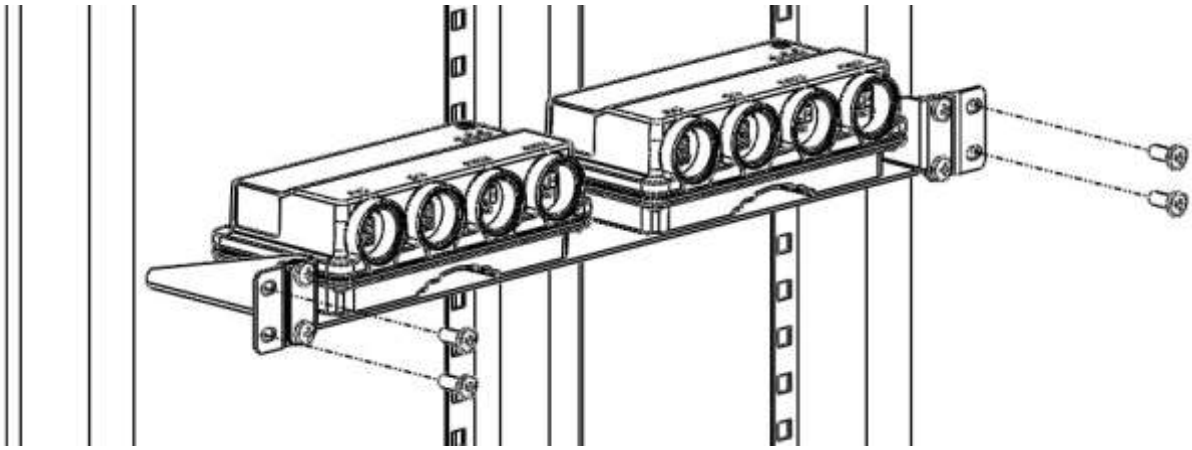

Note: For this type of installation, a 2RU space is required.

Ceragon Proprietary and Confidential

5. Installation Procedure and Antenna Alignment

Note:	Before starting an installation, use a leveler to make sure that the poles are 100% vertical. You need to check both sides of each pole at 90 degrees separation.

IP-20V includes an easy-install installation and alignment kit that enables you to perform a pole-mount installation in two easy steps, and to align the antenna by turning a few simple screws (*Figure 16*).

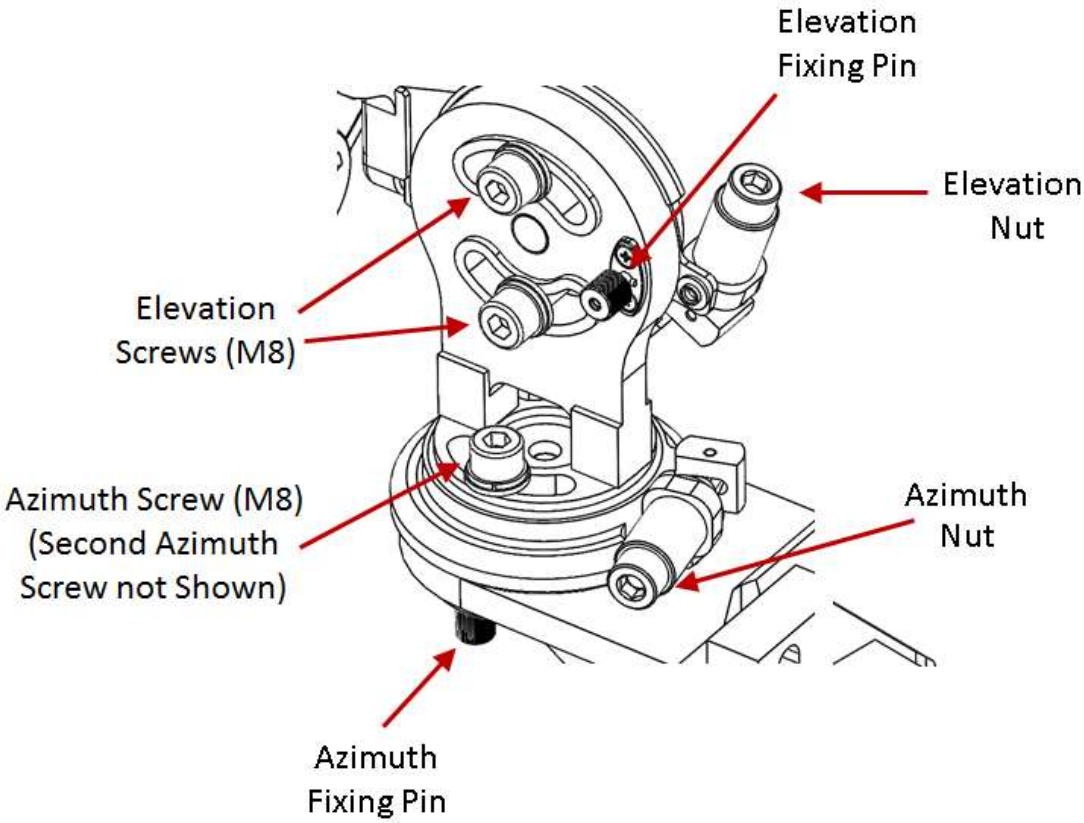

Figure 16: Installation and Alignment Device – Azimuth and Elevation Adjustment Tools

The installation and alignment device enables you to easily adjust the antenna's azimuth and elevation, in gross and fine intervals. Gross alignment enables you to adjust the azimuth and elevation in 15° increments. Fine alignment enables you to make more precise adjustments by turning the Azimuth and Elevation nuts such that each ¼ turn is equal to an adjustment of 0.25°.

There are two M8 Elevation Screws and two M8 Azimuth screws, as shown in *Figure 16*. Before starting the alignment, make sure these screws are securely in place so they will not fall out during the procedure, but not too tight, so as to enable you to manually adjust the azimuth and elevation to the approximate position you want, before performing exact antenna alignment as described in the following sections.

Ceragon Proprietary and Confidential

Upon delivery, the installation and alignment device is aligned 45° downward (elevation) and straight ahead (azimuth).

You can adjust the azimuth up to 45° in either direction by manually turning the azimuth base.

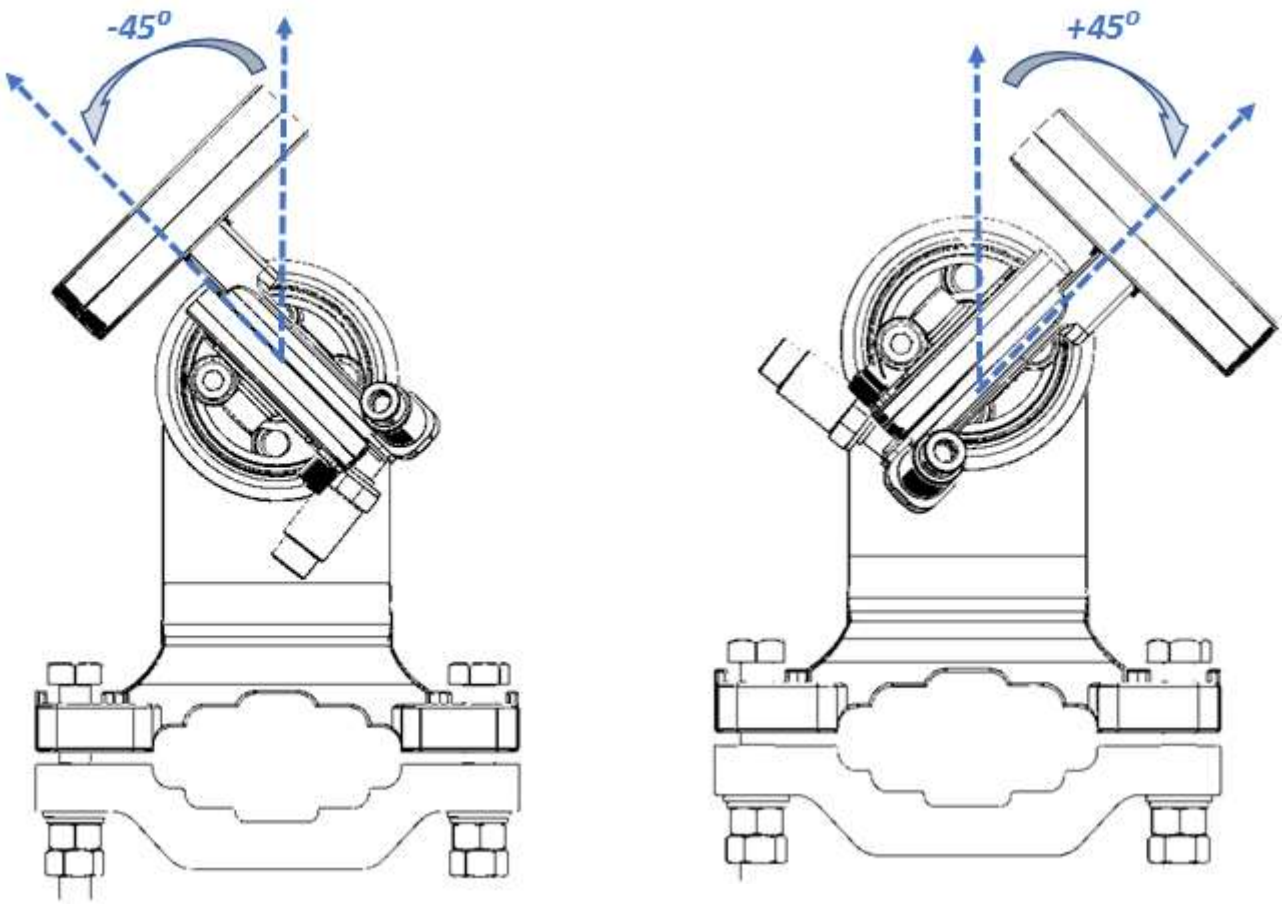

Figure 17: Installation and Alignment Device – Azimuth Range

Ceragon Proprietary and Confidential

For wall mount installations, you can adjust the azimuth an additional 45° in either direction by changing the placement of the Azimuth Screws. This enables you to adjust the azimuth a full 90° in either direction. See *Extending the Azimuth Range*.

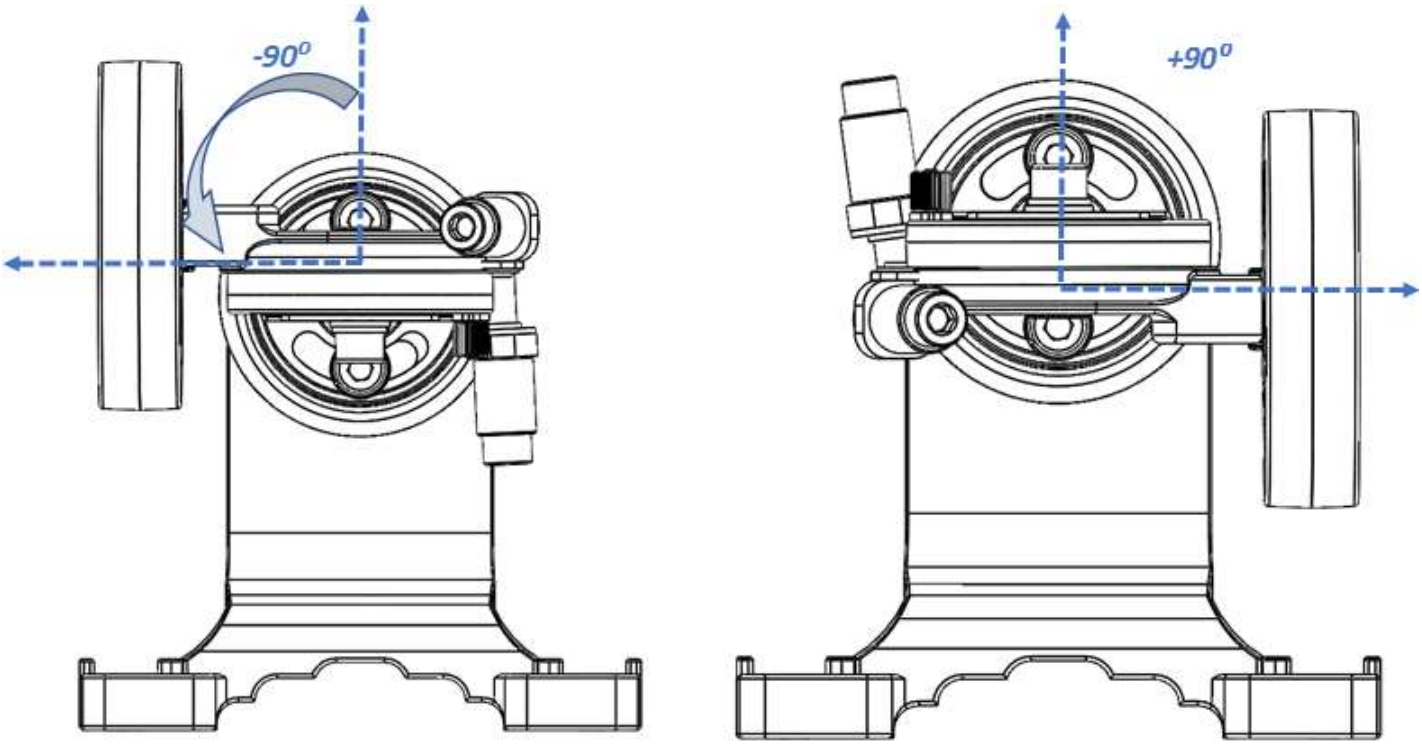

Figure 18: Installation and Alignment Device – Extended Azimuth Range

You can adjust the elevation from the delivery position of 45° downward to a position as far as 45° upward. Be sure to attach the IP-20V radio and antenna to the installation and alignment device *before* adjusting the elevation, otherwise the weight of the radio and antenna might accidently reduce the elevation angle.

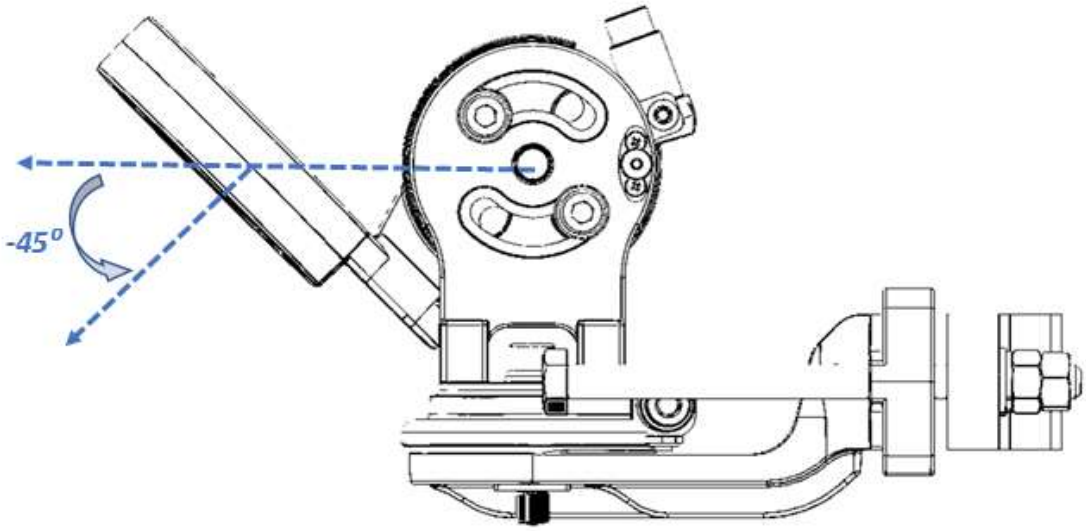

Figure 19: Installation and Alignment Device – Delivery Elevation (45° Downward)

Ceragon Proprietary and Confidential

You can adjust the elevation upwards as far as 45° upward.

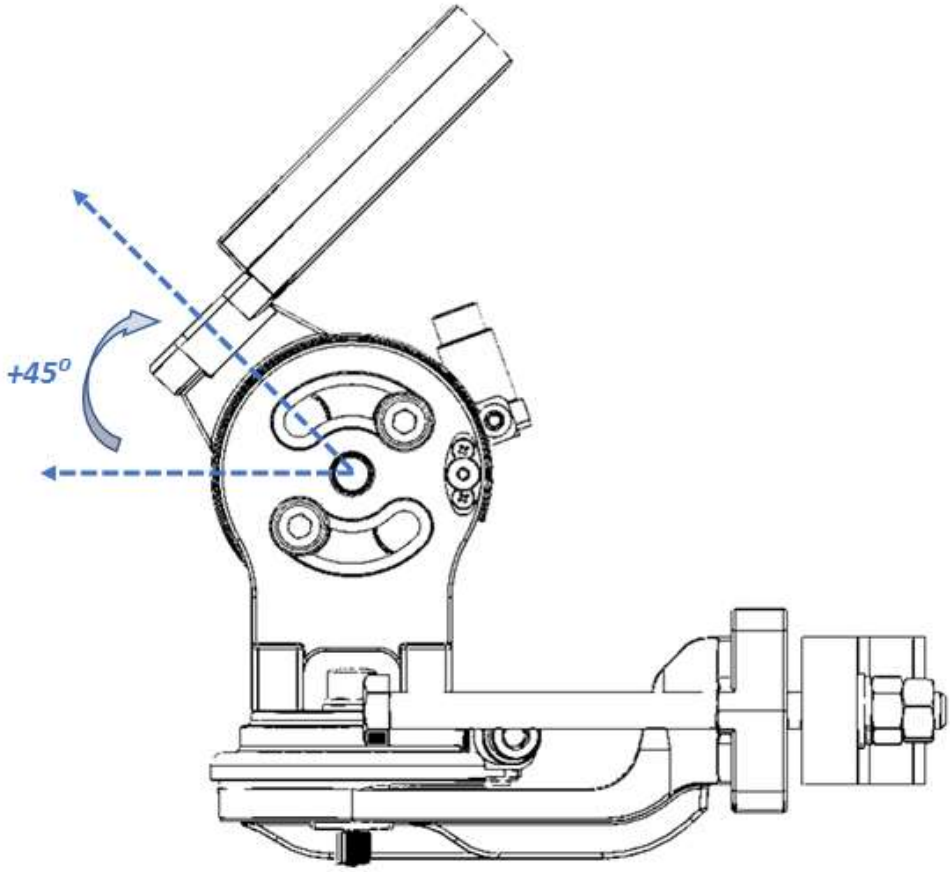

Figure 20: Installation and Alignment Device – Highest Elevation (45° Upward)

Ceragon Proprietary and Confidential

5.1 Pole Mount Assembly and Installation

The pole diameter range for pole mount installations is 8.89 cm – 11.43 cm (3.5 inches – 4.5 inches).

Note: The IP-20V radio can be assembled on the installation and alignment device on the ground, prior to attaching the device to the pole mount, if the logistics of the location make this more feasible than attaching the radio afterwards. See *Attaching the IP-20V to the Installation and Alignment Device*.

List of Items

Item	Description	Quantity	Remarks
1	IP20V Flat Antenna Mounting Kit	1	

Required Tools

- Socket key wrench inch set
- Socket key wrench metric set
- Open metric wrench set

5.1.1 Procedure

1. Open the outer bracket to slide the installation and alignment device onto the pole, then close the bracket as shown in the figure below.

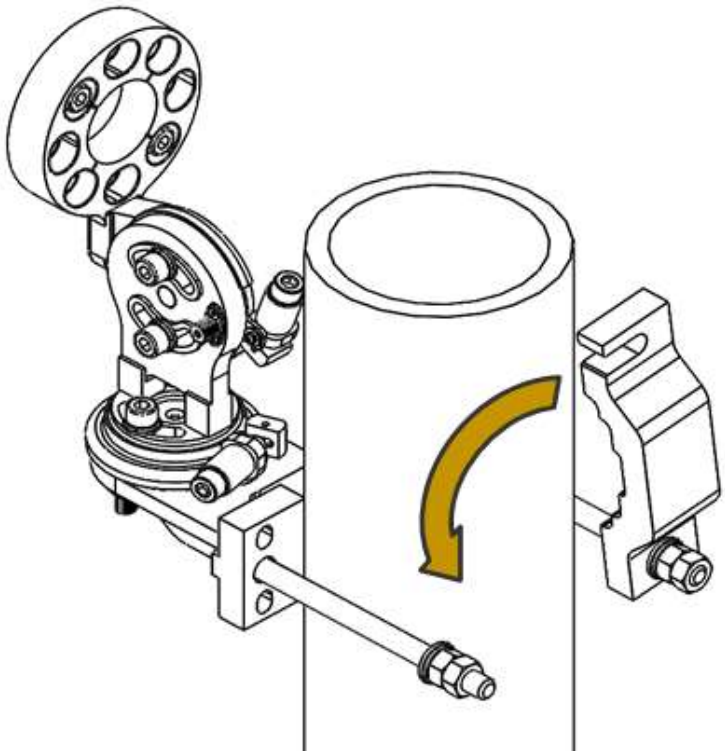

Ceragon Proprietary and Confidential

2. To secure the installation and alignment device to the pole, tighten the four nuts on the outer bracket, two on each side as shown in the figure below.

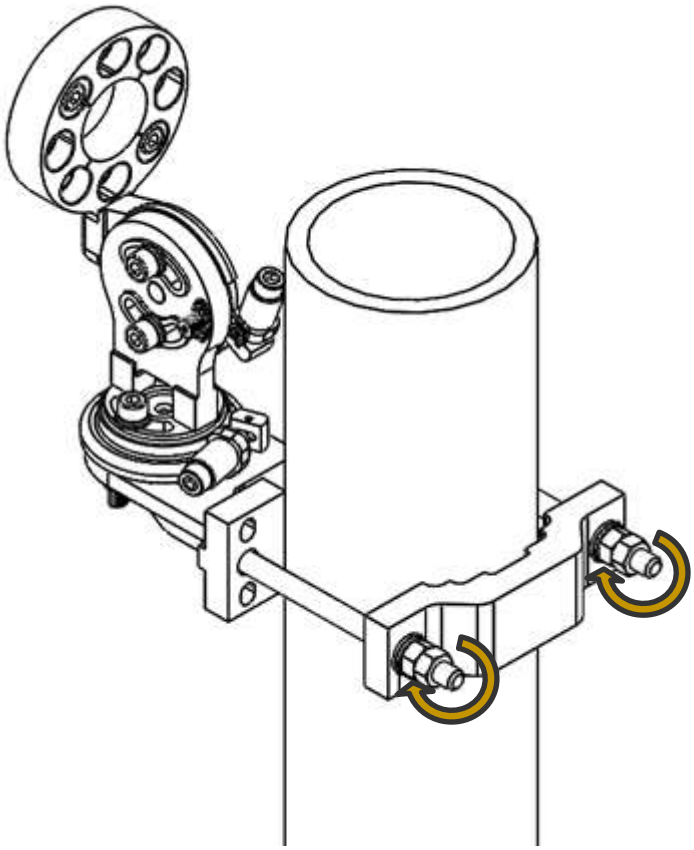

Ceragon Proprietary and Confidential

5.2 Wall Mount Assembly and Installation

This section contains instructions for installing a mounting kit on a wall. A mounting kit should only be installed on a concrete wall that is capable of supporting weight of at least 15 kg.

Item	Description	Quantity	Remarks
1	IP20V Flat Antenna Mounting Kit	1	
2	IP-20V radio with 43 dBi Flat Antenna	1	
3	Anchor screws M8x70	4	Not supplied with mounting kit
4	M8x45 screws	4	Not supplied with mounting kit
5	M8 spring washer	4	Not supplied with mounting kit
6	M8 flat washer	4	Not supplied with mounting kit

Required Tools

- Appropriate key wrench for the M8x45 screws
- A drilling machine

Note: In wall mount assembly, the 4 M10 nuts, 2 M10 flat and spring washers, 2 M10x150 screws, and the rear bracket that are supplied with the mounting kit are not used.

Ceragon Proprietary and Confidential

5.2.1 Procedure

1. Place the mounting kit on the wall and mark four screws positions.

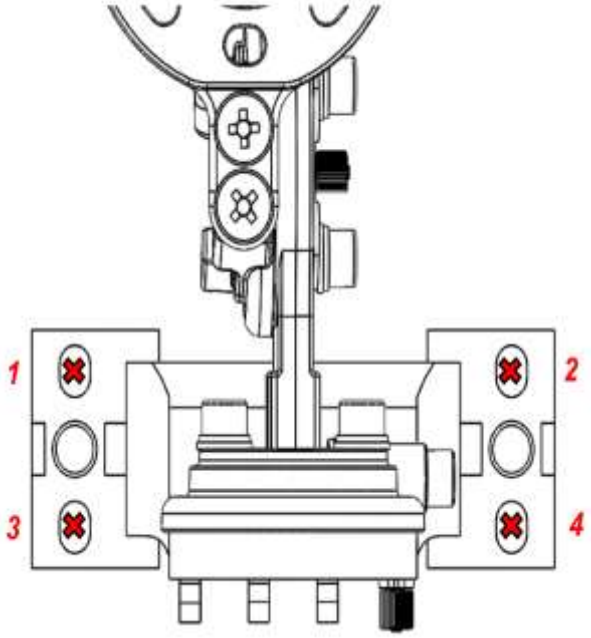

2. Remove the bracket and drill four holes into the wall.
3. Insert the anchor screws into the wall.
4. Place the mounting kit in front of the 4 anchor screws and tighten the 4 M8 screws, spring washers, and flat washers to secure the mounting device to the wall.

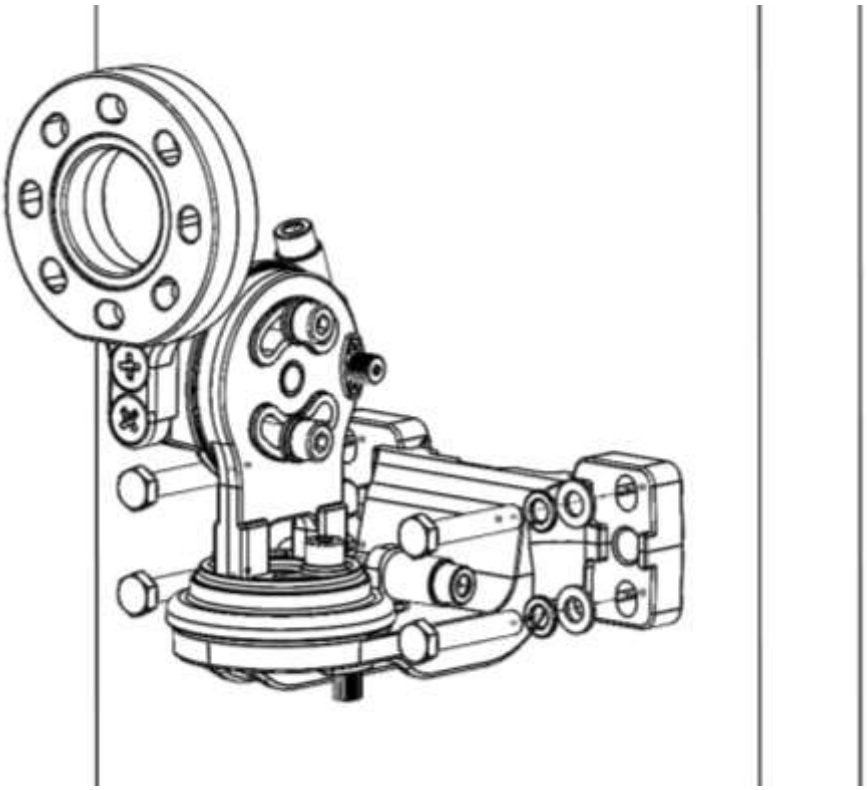

Ceragon Proprietary and Confidential

5.3 Attaching the IP-20V to the Installation and Alignment Device

1. Connect the IP-20V unit to the installation and alignment device, using the two M8 screws and washers supplied with the installation and alignment kit. Attach the IP-20V according to the desired polarization, as shown in the figures below.

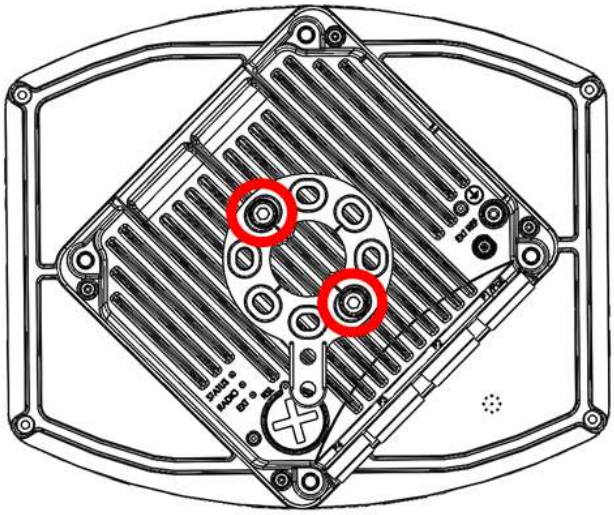

Figure 21: Horizontal Polarization – Screws and Washers

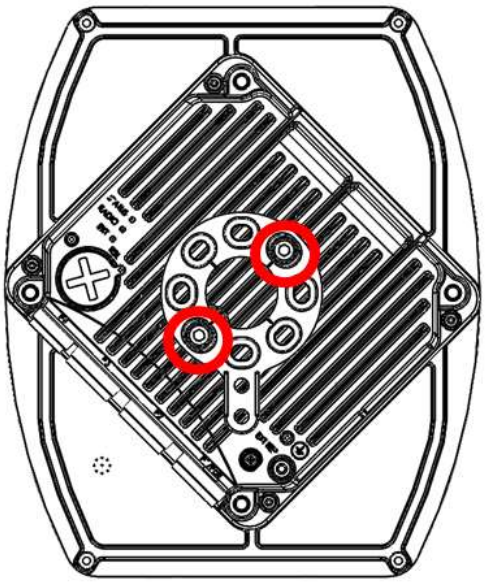

Figure 22: Vertical Polarization – Screws and Washers

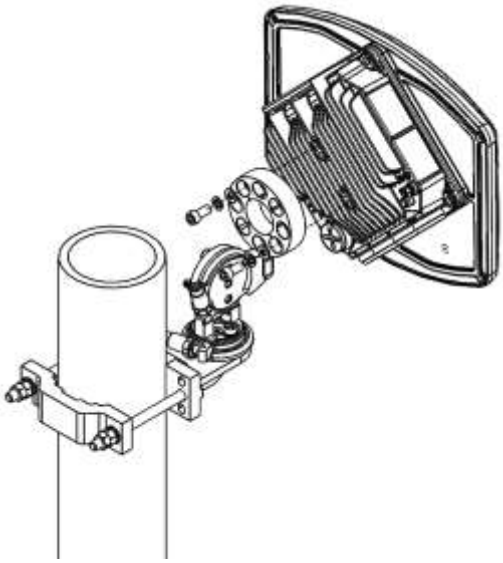

Figure 23: Horizontal Polarization – Radio and Installation and Alignment Kit

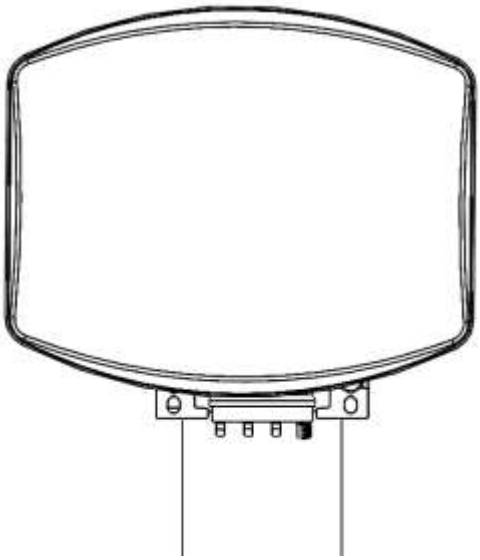

Figure 24: Horizontal Polarization – Antenna (Front)

Ceragon Proprietary and Confidential

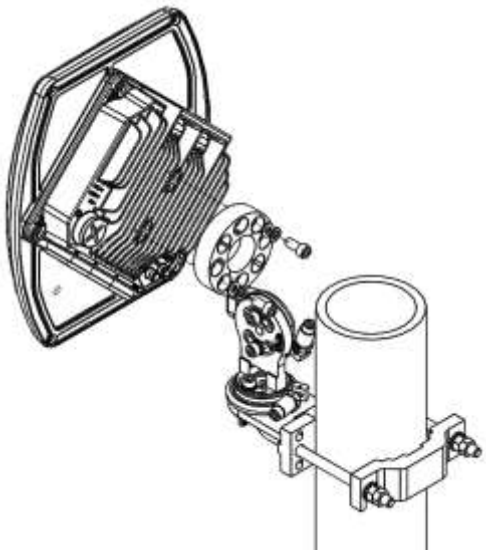

Figure 25: Vertical Polarization – Radio and Installation and Alignment Kit

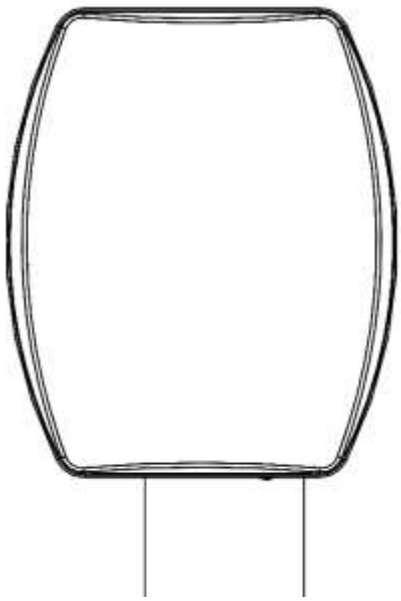

Figure 26: Vertical Polarization – Antenna (Front)

5.4 Performing Antenna Alignment

You can easily adjust the azimuth and elevation of the antenna using a number of screws nuts located on the installation and alignment device.

5.4.1 Adjusting the Antenna Azimuth

Note: For wall-mount installations, if it is necessary to adjust the azimuth by more than 45°, you must first adjust the position of the Azimuth Screws. See *Extending the Azimuth Range*.

Ceragon Proprietary and Confidential

5.4.1.1 Performing Gross Azimuth Adjustment

To adjust the antenna azimuth:

1 Loosen the Azimuth Fixing Pin (Figure 16) by pulling it gently out of its groove and rotating it counter-clockwise.

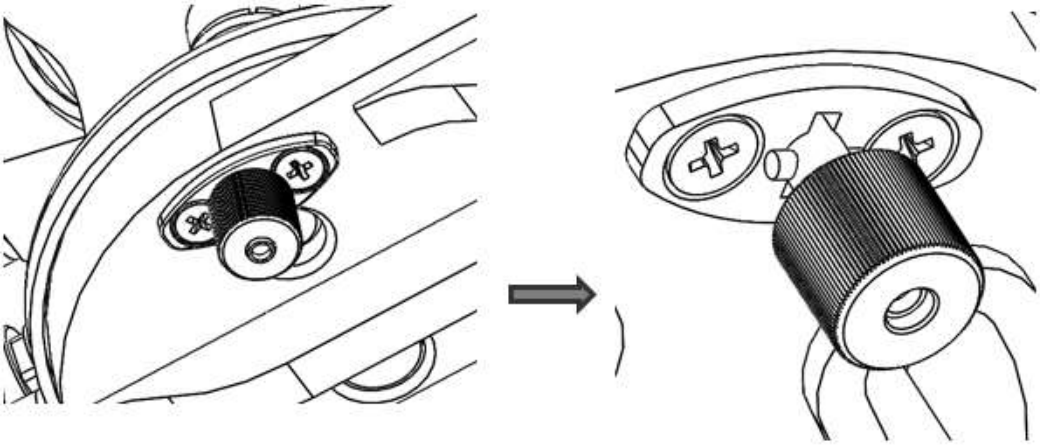

2 Manually adjust the azimuth base to its required location.

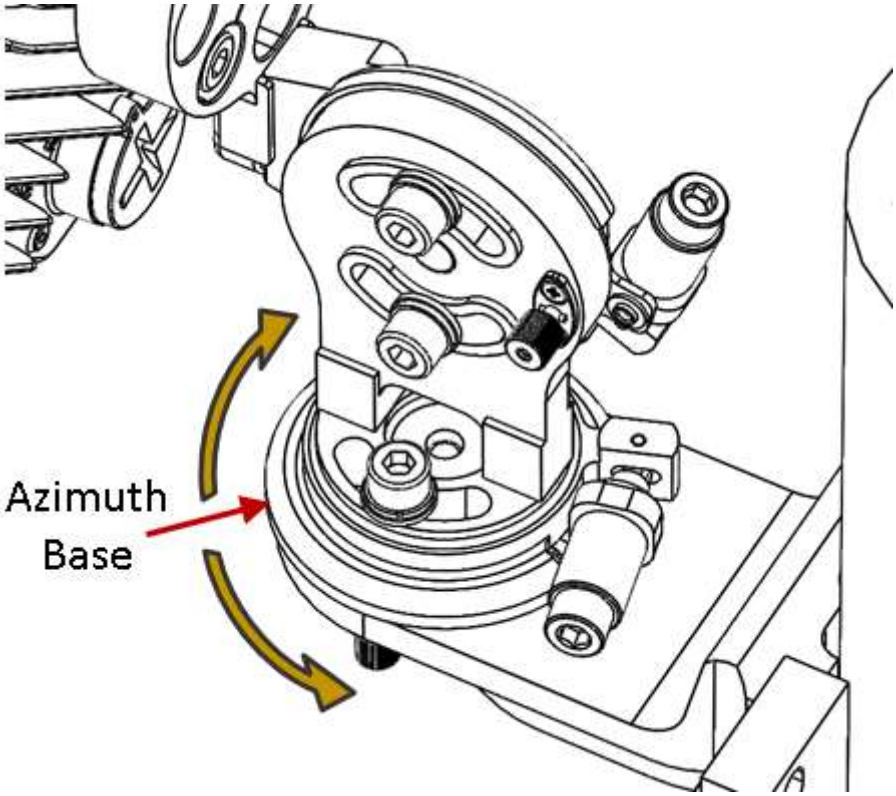

Ceragon Proprietary and Confidential

3 Once the azimuth base has been adjusted to its approximate location, lock the azimuth fixing pin by rotating the pin clockwise until it appears to be aligned with its groove. At this point, you must adjust the azimuth base until the fixing pin slips into its groove. There are notches within the device that enable you to adjust the azimuth in 15° increments. You can then perform fine azimuth adjustment as described below.

You will hear a click when the pin slips into the groove.

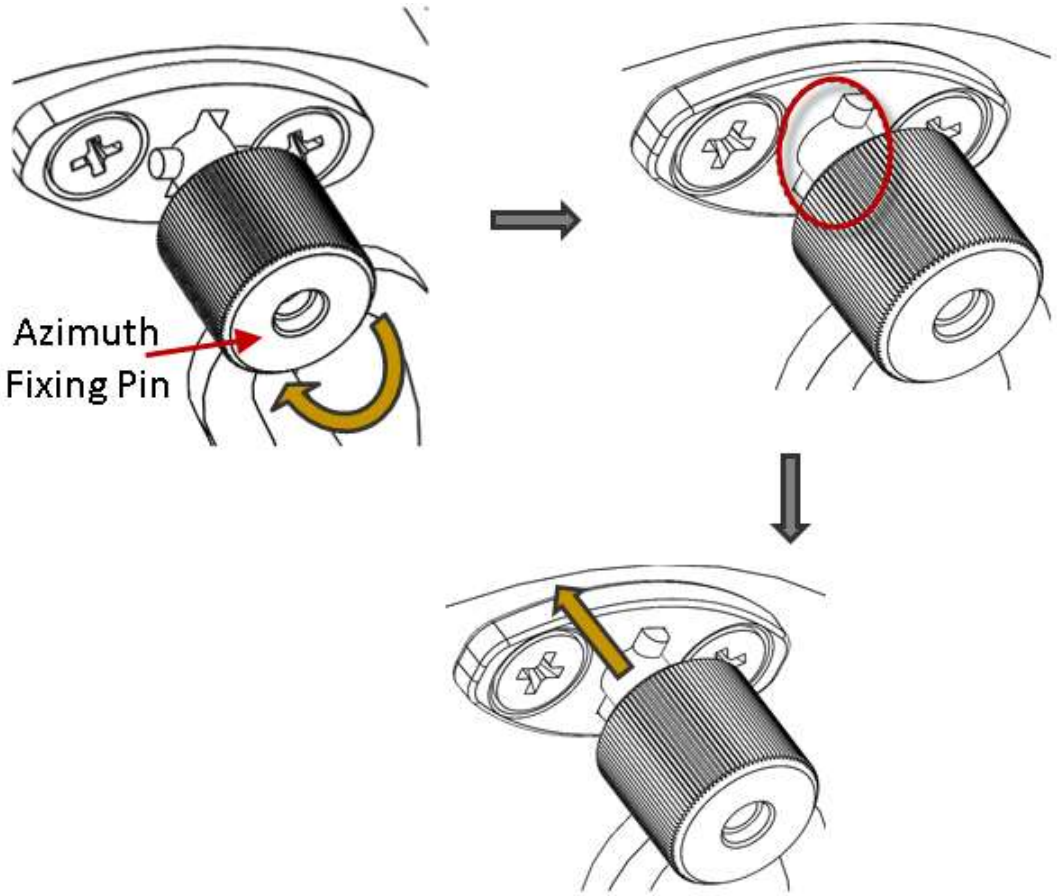

Ceragon Proprietary and Confidential

5.4.1.2 Performing Fine Azimuth Adjustment

To perform fine azimuth alignment:

1 Turn the Azimuth Nut), either by hand or using a key wrench, for fine tuning of the azimuth. Each ¼ turn is equal to an adjustment of 0.25°.
2 Tighten the two M8 Azimuth Screws connected to the azimuth base.

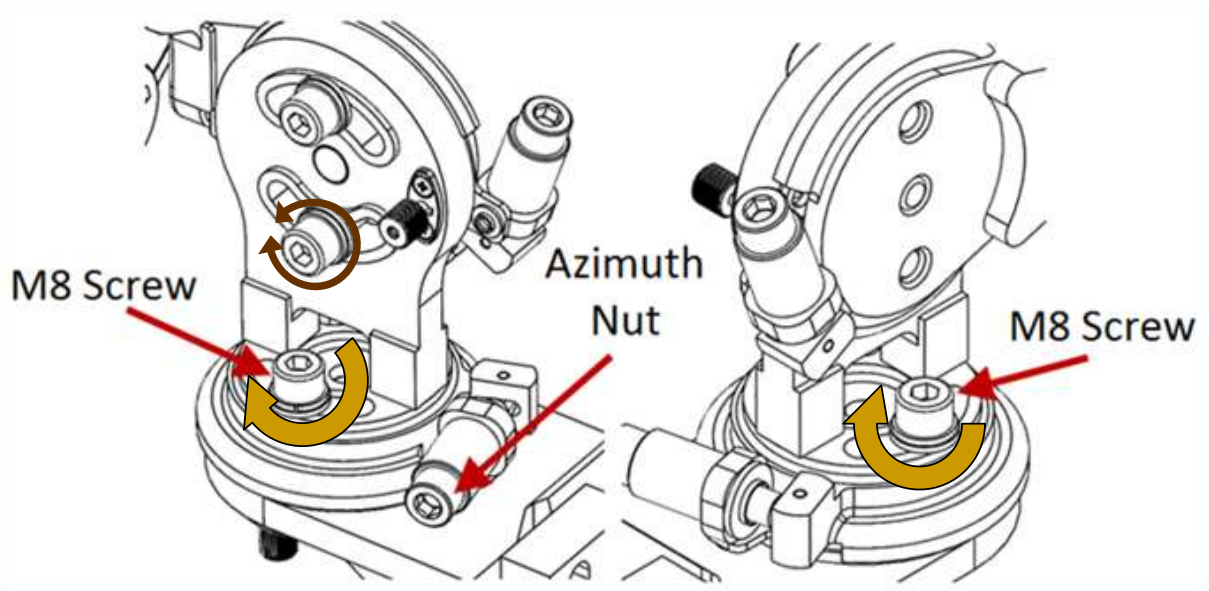

Ceragon Proprietary and Confidential

5.4.1.3 Extending the Azimuth Range

To extend the azimuth range beyond 45° in either direction:

1 Manually rotate the azimuth base 45° in the direction you want to align the azimuth.
2 Remove the two Azimuth Screws.

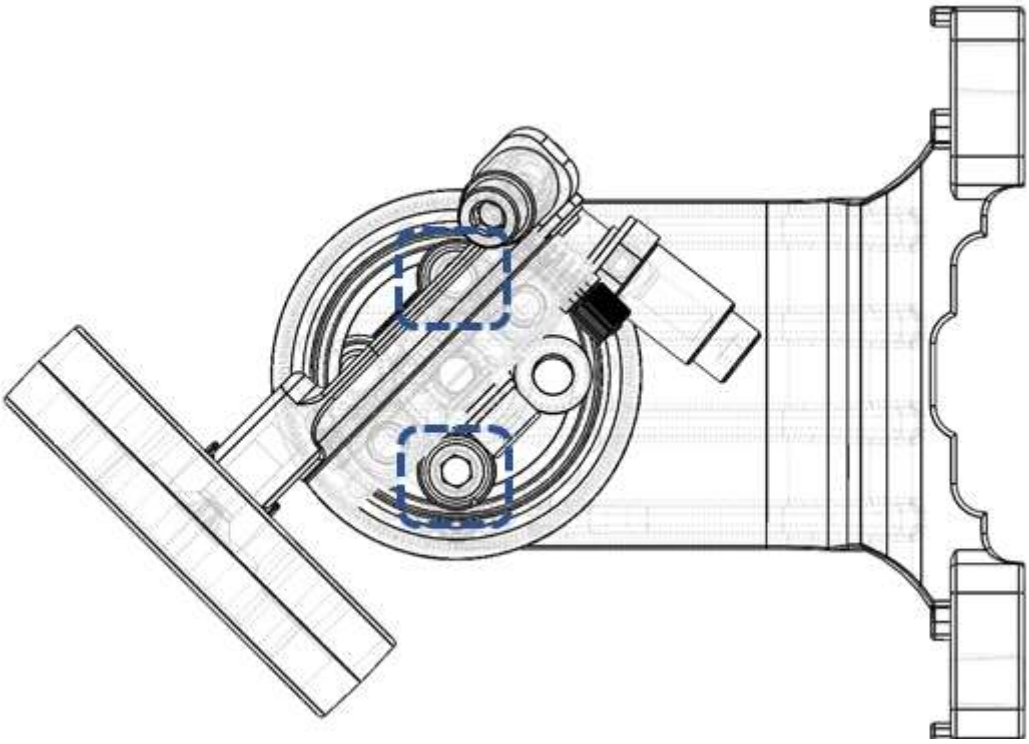

Figure 27: Azimuth Screws – Top View (Azimuth 45° to the Right)

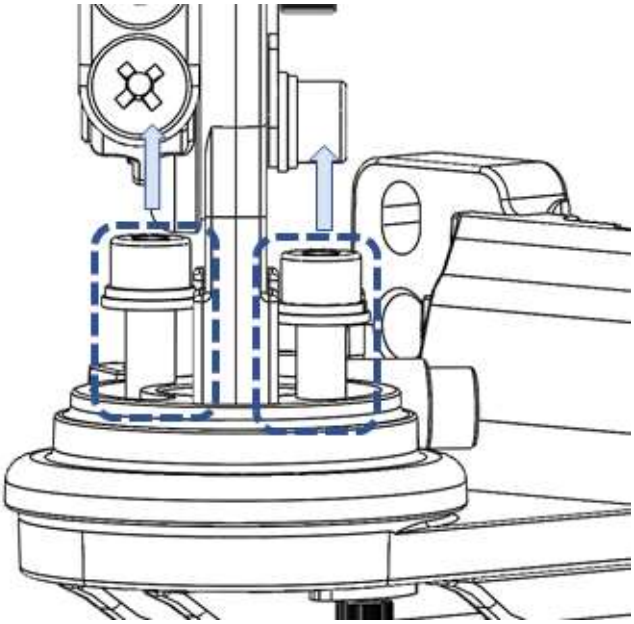

Figure 28: Removing the Azimuth Screws (Side View)

Ceragon Proprietary and Confidential

3 Insert the Azimuth Screws in the holes opposite their previous locations. For example, if you are adjusting the azimuth to the left, move the Azimuth Screw to the left of the device from the left hole to the right hole and move the Azimuth Screw to the right of the device from the right hole to the left hole, as shown in *Figure 27* and *Figure 29*. This will place the azimuth at an angle of 45° to the left or 45° to the right.

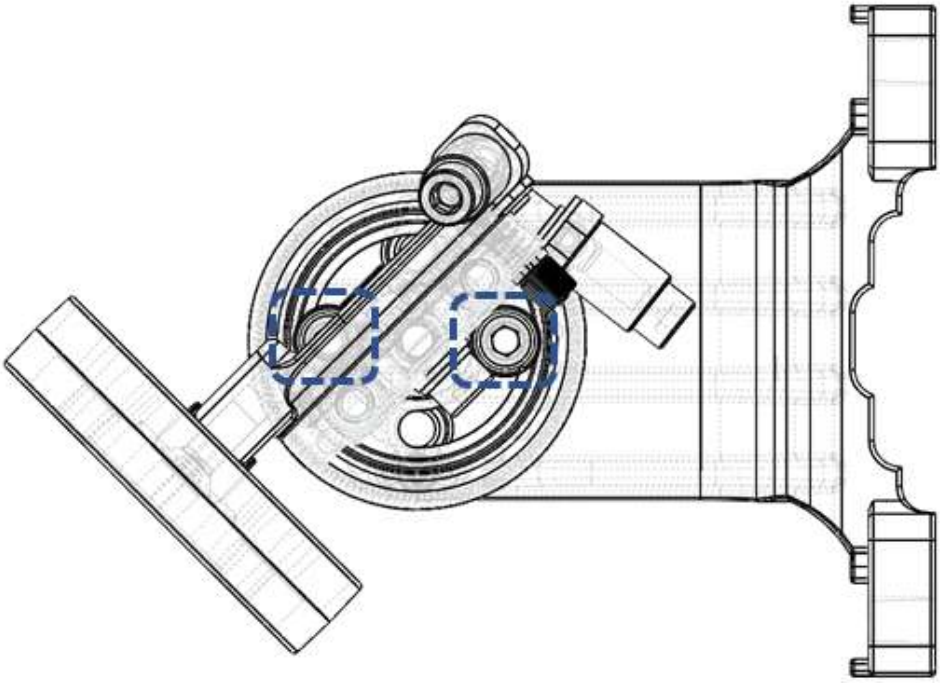

Figure 29: Azimuth Screws in New Placement – Top View (Azimuth 45° to the Right)

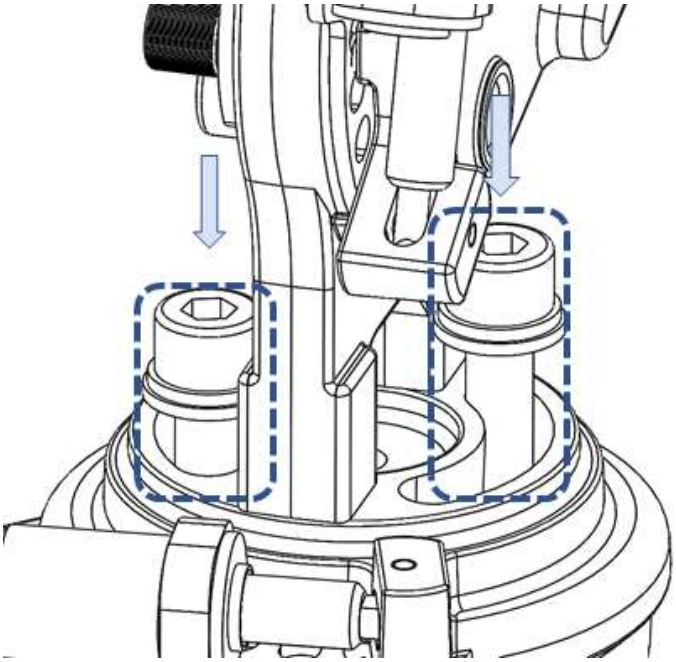

Figure 30: Repositioning the Azimuth Screws (Side View)

Ceragon Proprietary and Confidential

4 Tighten the two Azimuth Screws by hand, leaving them free enough so that you can manually rotate the azimuth base.
5 Follow the procedures in Performing Gross Azimuth Adjustment and Performing Fine Azimuth Adjustment to further adjust the azimuth from the 45° angle created by repositioning the Azimuth Screws.

5.4.2 Adjusting the Antenna Elevation

5.4.2.1 Performing Gross Elevation Adjustment

To perform gross adjustment of the antenna elevation:

1 Loosen the Elevation Fixing Pin (Figure 16) by pulling it gently out of its groove and rotating it counter-clockwise.

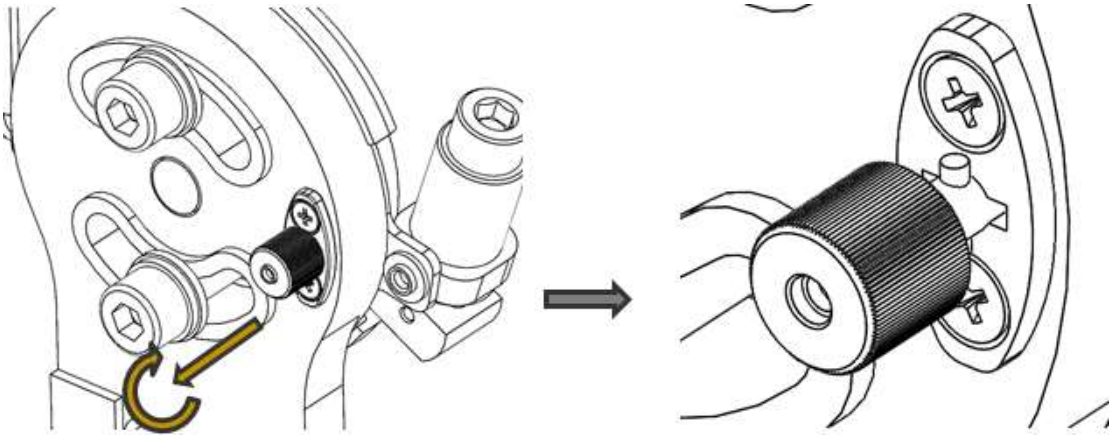

2 Move the Elevation Adaptor to the required location.

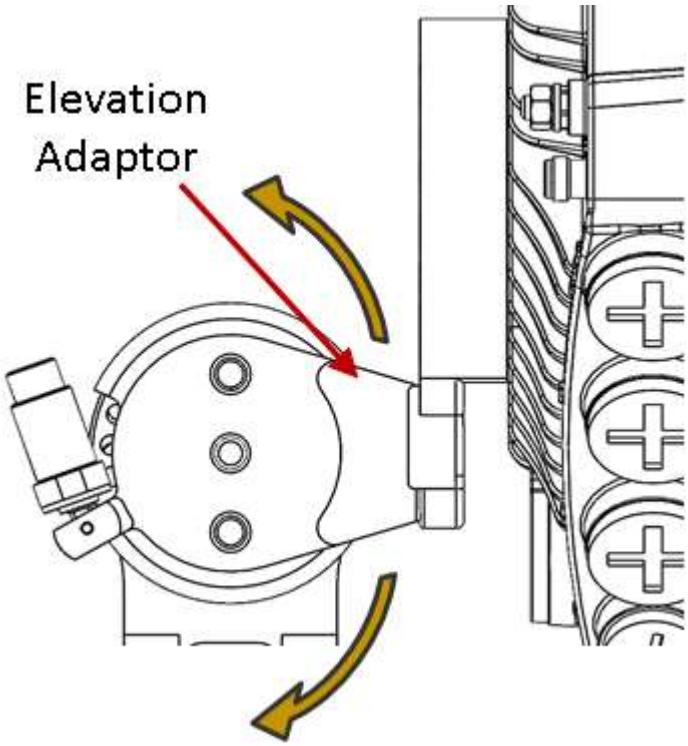

Ceragon Proprietary and Confidential

3 Once the Elevation Adaptor has been adjusted to its approximate location, lock the elevation fixing pin by rotating the pin clockwise until it appears to be aligned with its groove. At this point, you must adjust the Elevation Adaptor until the fixing pin slips into its groove. There are notches within the device that enable you to adjust the elevation in 15° increments. You can then perform fine elevation adjustment as described below.

You will hear a click when the pin slips into the groove.

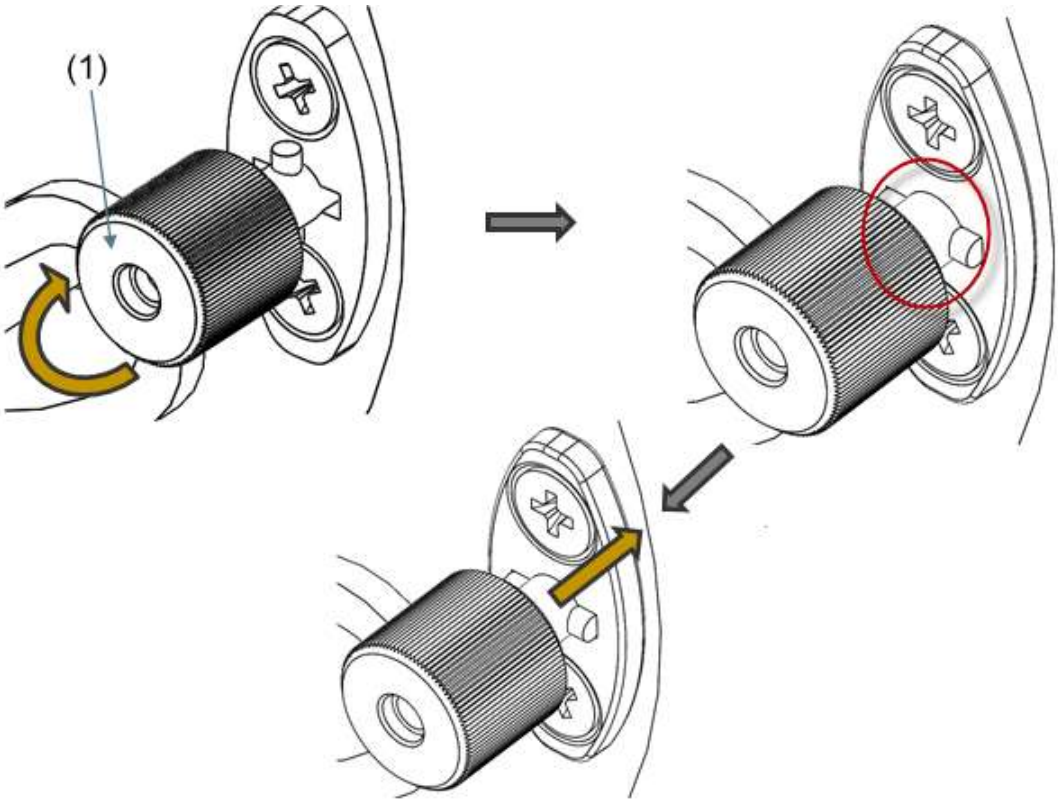

Ceragon Proprietary and Confidential

5.4.2.2 Performing Fine Elevation Adjustment

To perform fine elevation alignment:

1 Turn the Elevation Nut, either by hand or using a key wrench, for fine tuning of the elevation. Each ¼ turn is equal to an adjustment of 0.25°.

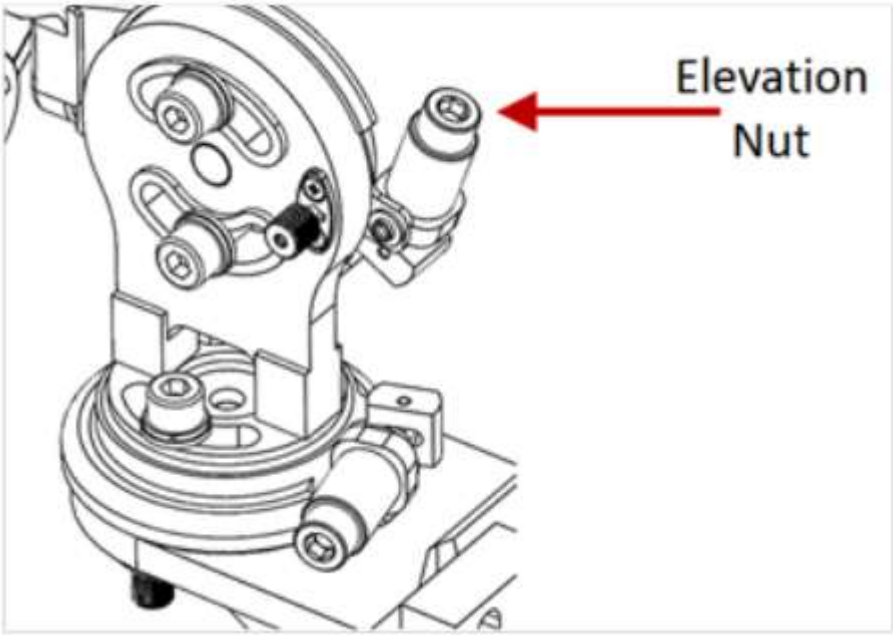

Ceragon Proprietary and Confidential

2 Tighten the two M8 Elevation Screws connected to the Elevation Adaptor.

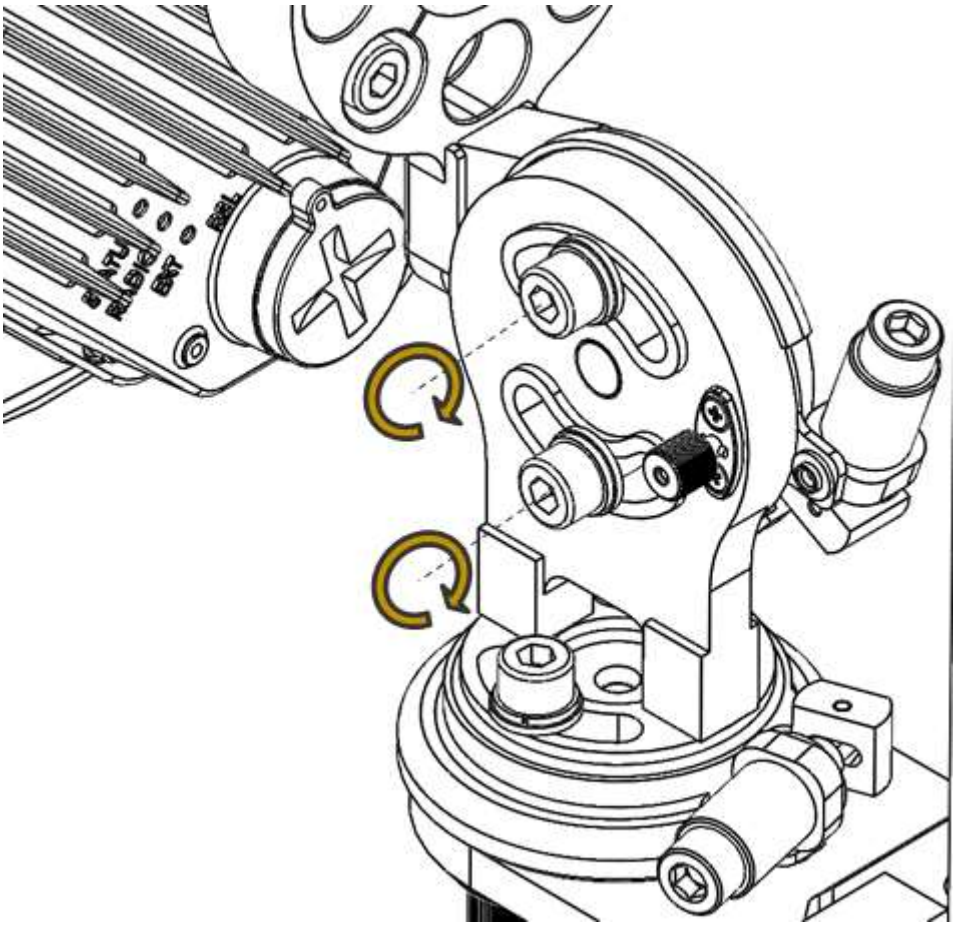

Ceragon Proprietary and Confidential