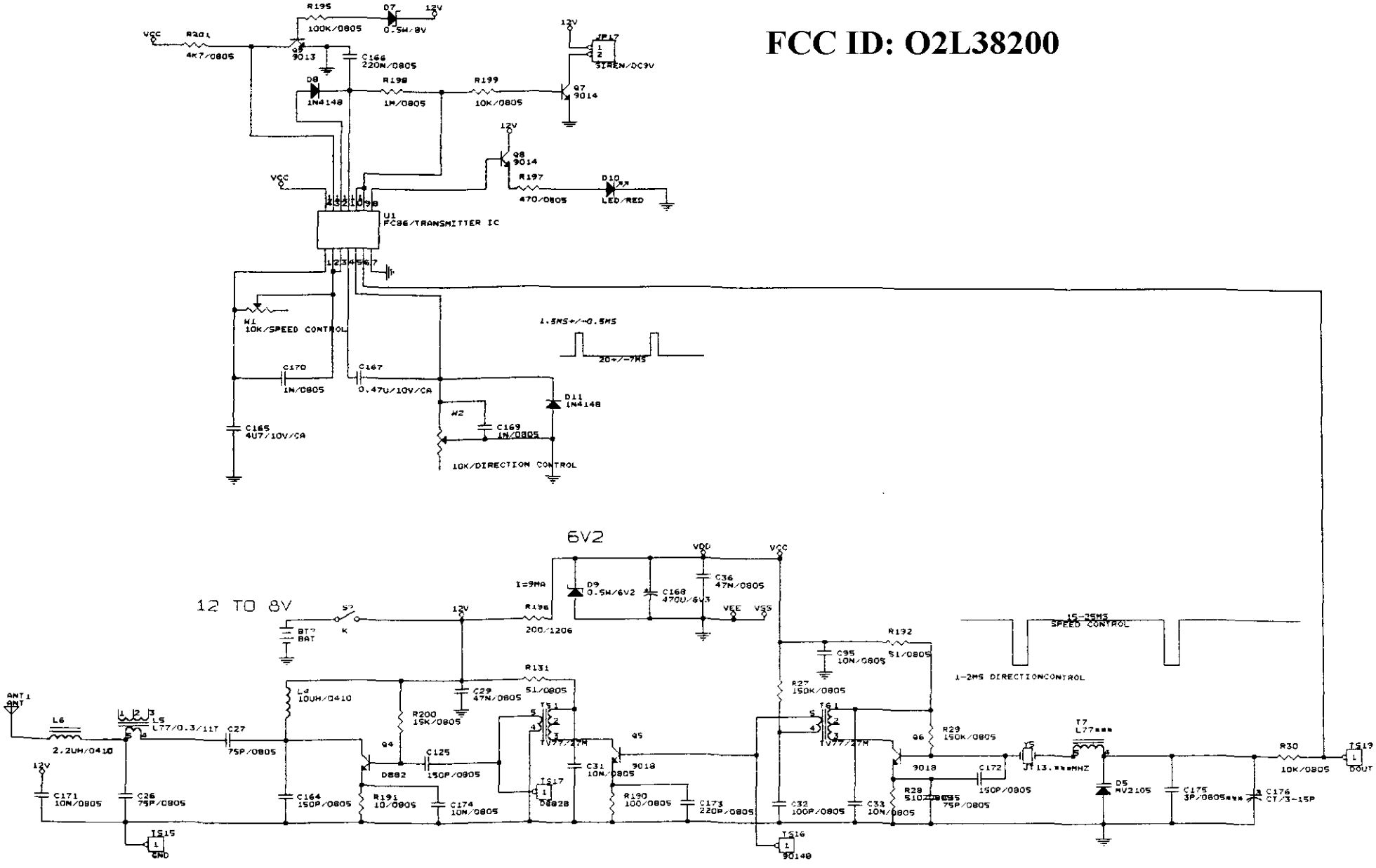FCC ID: O2L38200