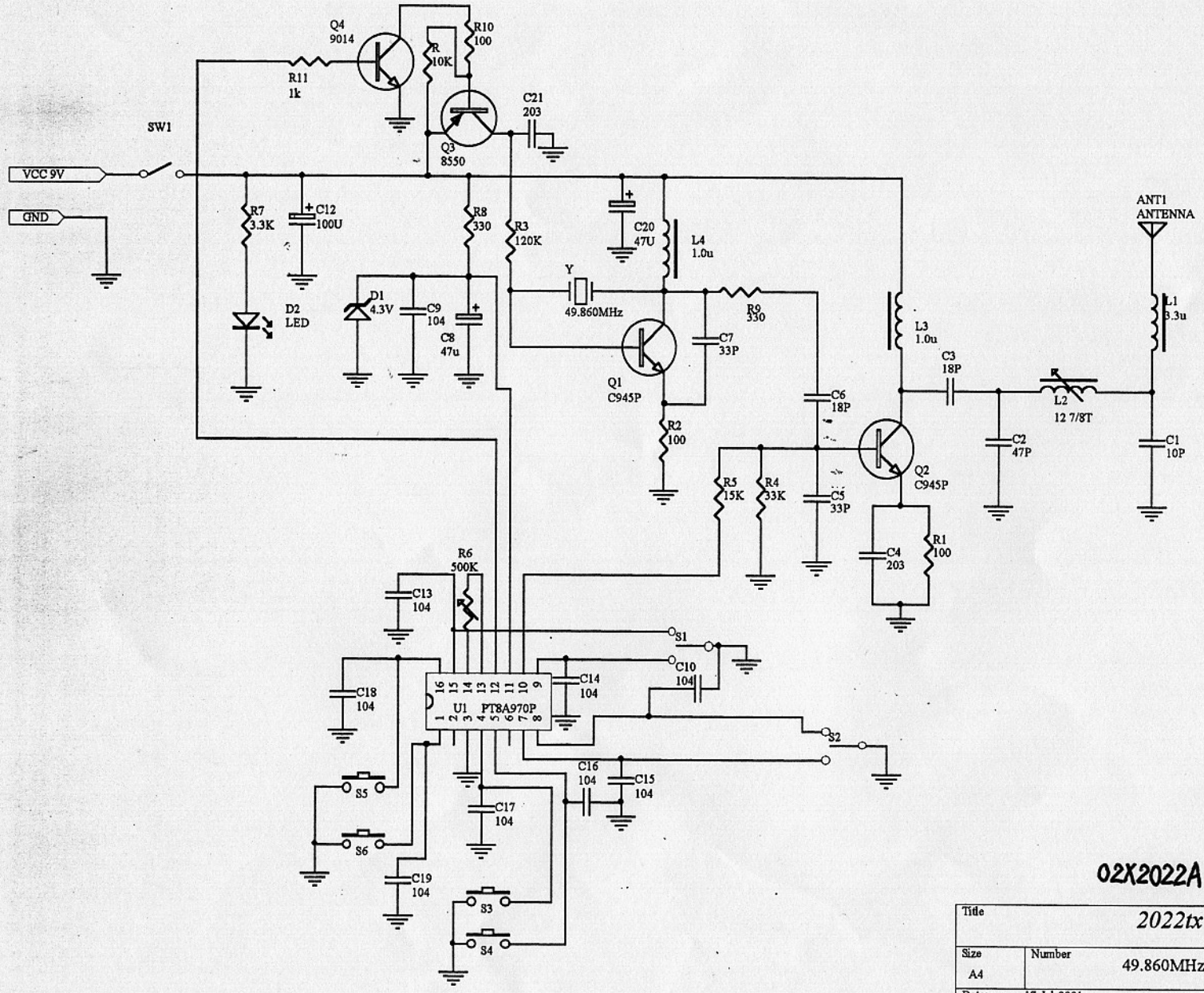


02X2022A

| | | | |
|---|---|---|---|
| Title | 2022tx | | |
| Size A4 | Number 49.860MHz | | Revision |
| Date: | 17-Jul-2001 | Sheet of | |
| File: | E:\YXP\SCH1\2022(49).SCH | Drawn By: | yang xian ping |