FCC REPORT
(LTE)

Applicant:	SWAGTEK
Address of Applicant:	10205 NW 19th Street, STE 101, Miami, FL33172, USA
Equipment Under Test (EUT)	
Product Name:	5.0 Inch 4G Smart Phone
Model No.:	L50T, VICTORY, N50T
Trade mark:	LOGIC, iSWAG, UNONU
FCC ID:	O55503719
Applicable standards:	FCC CFR Title 47 Part 2 FCC CFR Title 47 Part 27 Subpart M
Date of sample receipt:	09 Sep., 2021
Date of Test:	10 Sep., to 24 Sep., 2021
Date of report issued:	26 Sep., 2021
Test Result:	PASS*

*In the configuration tested, the EUT complied with the standards specified above.

Authorized Signature:

Bruce Zhang
Laboratory Manager

This report details the results of the testing carried out on one sample. The results contained in this test report do not relate to other samples of the same product and does not permit the use of the JYT product certification mark. The manufacturer should ensure that all products in series production are in conformity with the product sample detailed in this report.

This report may only be reproduced and distributed in full. If the product in this report is used in any configuration other than that detailed in the report, the manufacturer must ensure the new system complies with all relevant standards.

This document cannot be reproduced except in full, without prior written approval of the Company. Any unauthorized alteration, forgery or falsification of the content or appearance of this document is unlawful, and offenders may be prosecuted to the fullest extent of the law. Unless otherwise stated the results shown in this test report refer only to the sample(s) tested and such sample(s) are retained for 90 days only.

2. Version

Version No.	Date	Description
00	*26 Sep., 2021*	*Original*

Remark:

This report was amended on FCC ID: O55503717 follow FCC Class II Permissive Change. The differences between them as below: The screen was replaced. The frequency bands 3G Band4 and 4G Band7 are added, and EMC and frequency band tests need to be supplemented.

Tested by: Mike.ou ***Date:*** *26 Sep., 2021*

Test Engineer

Reviewed by: Winner zhang ***Date:*** *26 Sep., 2021*

Project Engineer

3. Contents

Page

1. COVER PAGE 1

2. VERSION 2

3. CONTENTS 3

4. TEST SUMMARY 4

5. GENERAL INFORMATION 5

5.1 CLIENT INFORMATION 5
5.2 GENERAL DESCRIPTION OF E.U.T 5
5.3 TEST ENVIRONMENT AND MODE 8
5.4 DESCRIPTION OF SUPPORT UNITS 8
5.5 MEASUREMENT UNCERTAINTY 8
5.6 RELATED SUBMITTAL(S) / GRANT (S) 8
5.7 ADDITIONS TO, DEVIATIONS, OR EXCLUSIONS FROM THE METHOD 8
5.8 LABORATORY FACILITY 8
5.9 LABORATORY LOCATION 8
5.10 TEST INSTRUMENTS LIST 9

6. TEST RESULTS 10

6.1 CONDUCTED OUTPUT POWER, ERP AND EIRP 10
6.2 PEAK-TO-AVERAGE RATIO 11
6.3 OCCUPY BANDWIDTH 12
6.4 OUT OF BAND EMISSION AT ANTENNA TERMINALS 13
6.5 FIELD STRENGTH OF SPURIOUS RADIATION MEASUREMENT 14
6.6 FREQUENCY STABILITY V.S. TEMPERATURE MEASUREMENT 18
6.7 FREQUENCY STABILITY V.S. VOLTAGE MEASUREMENT 19

7 TEST SETUP PHOTO 20

8 EUT CONSTRUCTIONAL DETAILS 21

4. Test Summary

Test Items	Section in CFR 47	Result
RF Exposure (SAR)	Part 1.1307 Part 2.1093	Passed (Please refer to SAR Report)
RF Output Power	Part 2.1046 Part 27.50 (h)(2)	Appendix A – LTE
Peak-to-Average Ratio	Part 27.50(d)(5)	Appendix B – LTE
Modulation Characteristics	Part 2.1047	Pass
99% & -26 dB Occupied Bandwidth	Part 2.1049 Part 27.53(m)	Appendix C – LTE
Out of band emission at antenna terminals	Part 2.1053 Part 27.53(m)	Appendix D – LTE Appendix E – LTE
Field strength of spurious radiation	Part 27.53(m)	Pass
Frequency stability vs. temperature	Part 27.54 Part 2.1055(a)(1)(b)	Appendix F – LTE
Frequency stability vs. voltage	Part 27.54 Part 2.1055(d)(2)	Appendix F – LTE

Remark:

1. *Pass: The EUT complies with the essential requirements in the standard.*
2. *The cable insertion loss used by "RF Output Power" and other conduction measurement items is 0.5dB(Fundamental Frequency below 1GHz)/1.0dB(Fundamental Frequency above 1GHz) (provided by the customer).*

Test Method:	*ANSI/TIA-603-E-2016* *ANSI C63.26-2015*

5. General Information

5.1 Client Information

Applicant:	SWAGTEK
Address:	10205 NW 19th Street, STE 101, Miami, FL33172, USA
Manufacturer/ Factory:	SWAGTEK
Address:	10205 NW 19th Street, STE 101, Miami, FL33172, USA

5.2 General Description of E.U.T.

Product Name:	5.0 Inch 4G Smart Phone		
Model No.:	L50T, VICTORY, N50T		
Operation Frequency range:	LTE Band 7: TX: 2500MHz-2570MHz RX: 2620MHz-2690MHz		
Modulation type:	☒QPSK	☒16QAM	☒64QAM
Antenna type:	Internal Antenna		
Antenna gain:	LTE Band 7: 0.26 dBi(declare by Applicant)		
Power supply:	Rechargeable Li-ion Battery DC3.8V-2000mAh		
AC adapter:	Input: AC100-240V 50/60Hz 0.15A Output: DC 5.0V, 700mA		
Test Sample Condition:	The applicant provided engineering samples for staying in continuously transmitting for testing.		

Operation Frequency List:

LTE Band 7 (5MHz)		LTE Band 7 (10MHz)	
Channel	Frequency (MHz)	Channel	Frequency (MHz)
20775	2502.50	20800	2505.00
20776	2502.60	20801	2502.10
….	….	….	….
21099	2534.90	21099	2534.90
21100	2535.00	21100	2535.00
21101	2535.20	21101	2535.20
…	…	…	…
21424	2567.40	21399	2564.90
21425	2567.50	21400	2565.00
LTE Band 7 (15MHz)		LTE Band 7 (20MHz)	
Channel	Frequency (MHz)	Channel	Frequency (MHz)
20825	2507.50	20850	2510.00
20826	2507.60	20851	2510.10
….	….	….	….
21099	2534.90	21099	2534.90
21100	2535.00	21100	2535.00
21101	2535.20	21101	2535.20
…	…	…	…
21374	2562.40	21349	2559.90
21375	2562.50	21350	2560.00

Regards to the operating frequency range, the lowest frequency, the middle frequency, and the highest frequency of channel were selected to perform the test, and the selected channels as below:

LTE Band 7 (5MHz)			LTE Band 7 (10MHz)		
Channel		Frequency (MHz)	Channel		Frequency (MHz)
Lowest channel	20775	2502.50	Lowest channel	20800	2505.00
Middle channel	21100	2535.00	Middle channel	21100	2535.00
Highest channel	21425	2567.50	Highest channel	21400	2565.00
LTE Band 7 (15MHz)			LTE Band 7 (20MHz)		
Channel		Frequency (MHz)	Channel		Frequency (MHz)
Lowest channel	20825	2507.50	Lowest channel	20850	2510.00
Middle channel	21100	2535.00	Middle channel	21100	2535.00
Highest channel	21375	2562.50	Highest channel	21350	2560.00

5.3 Test environment and mode

Operating Environment:	
Temperature:	Normal: 15℃ ~ 35℃, Extreme: -30℃ ~ +50℃
Humidity:	20 % ~ 75 % RH
Atmospheric Pressure:	1008 mbar
Voltage:	Nominal: 3.8Vdc, Extreme: Low 3.3Vdc, High 4.4Vdc
Test mode:	
LTE QPSK mode	Keep the EUT communication with simulated station in QPSK mode
LTE 16-QAM mode	Keep the EUT communication with simulated station in 16-QAM mode
Remark: The EUT has been tested under continuous transmitting mode. Channel Low, Mid and High for each type band with rated data rate were chosen for full testing. The field strength of spurious radiation emission was measured as EUT stand-up position (H mode) and lie down position (E1, E2 mode) for these modes. Just the worst case position (H mode) shown in report.	

5.4 Description of Support Units

Test Equipment	Manufacturer	Model No.	Serial No.
Simulated Station	Anritsu	MT8820C	6201026545

5.5 Measurement Uncertainty

Parameter	Expanded Uncertainty (Confidence of 95%)
Radiated Emission (9kHz ~ 30MHz electric field) for 3m SAC	3.13 dB
Radiated Emission (9kHz ~ 30MHz magnetic field) for 3m SAC	3.13 dB
Radiated Emission (30MHz ~ 1GHz) for 3m SAC	4.45 dB
Radiated Emission (1GHz ~ 18GHz) for 3m SAC	5.34 dB
Radiated Emission (18GHz ~ 40GHz) for 3m SAC	5.34 dB

5.6 Related Submittal(s) / Grant (s)

This is an original grant, no related submittals and grants.

5.7 Additions to, deviations, or exclusions from the method

No

5.8 Laboratory Facility

The test facility is recognized, certified, or accredited by the following organizations:

- **FCC - Designation No.: CN1211**
  JianYan Testing Group Shenzhen Co., Ltd. has been accredited as a testing laboratory by FCC (Federal Communications Commission). The test firm Registration No. is 727551.
- **ISED – CAB identifier.: CN0021**
  The 3m Semi-anechoic chamber of JianYan Testing Group Shenzhen Co., Ltd. has been Registered by Certification and Engineering Bureau of Industry Canada for radio equipment testing with Registration No.: 10106A-1.
- **A2LA - Registration No.: 4346.01**
  This laboratory is accredited in accordance with the recognized International Standard ISO/IEC 17025:2017 General requirements for the competence of testing and calibration laboratories. The test scope can be found as below link: https://portal.a2la.org/scopepdf/4346-01.pdf

5.9 Laboratory Location

JianYan Testing Group Shenzhen Co., Ltd.
Address: No.101, Building 8, Innovation Wisdom Port, No.155 Hongtian Road, Huangpu Community, Xinqiao Street, Bao'an District, Shenzhen, Guangdong, People's Republic of China.
Tel: +86-755-23118282, Fax: +86-755-23116366
Email: info-JYTee@lets.com, Website: http://www.ccis-cb.com

5.10 Test Instruments list

Radiated Emission:					
Test Equipment	**Manufacturer**	**Model No.**	**Serial No.**	**Cal.Date (mm-dd-yy)**	**Cal.Due date (mm-dd-yy)**
3m SAC	ETS	RFD-100	Q1984	04-14-2021	04-13-2024
Loop Antenna	SCHWARZBECK	FMZB 1519 B	1519B-044	03-07-2021	03-06-2022
BiConiLog Antenna	SCHWARZBECK	VULB9163	9163-1246	03-07-2021	03-06-2022
Biconical Antenna	SCHWARZBECK	VUBA 9117	9117#359	06-17-2021	06-17-2022
Horn Antenna	SCHWARZBECK	BBHA9120D	912D-916	03-07-2021	03-06-2022
Broad-Band Horn Antenna	SCHWARZBECK	BBHA9170	1067	04-02-2021	04-01-2022
Broad-Band Horn Antenna	SCHWARZBECK	BBHA9170	1068	04-02-2021	04-01-2022
EMI Test Receiver	Rohde & Schwarz	ESRP7	101070	03-03-2021	03-02-2022
Spectrum analyzer	Rohde & Schwarz	FSP30	101454	03-03-2021	03-02-2022
Spectrum analyzer	Keysight	N9010B	MY60240202	11-27-2020	11-26-2021
Simulated Station	Anritsu	MT8820C	6201026545	03-03-2021	03-02-2022
Low Pre-amplifier	SCHWARZBECK	BBV9743B	00305	03-07-2021	03-06-2022
High Pre-amplifier	SKET	LNPA_0118G-50	MF280208233	03-07-2021	03-06-2022
Cable	Qualwave	JYT3M-1G-NN-8M	JYT3M-1	03-07-2021	03-06-2022
Cable	Qualwave	JYT3M-18G-NN-8M	JYT3M-2	03-07-2021	03-06-2022
Cable	Qualwave	JYT3M-1G-BB-5M	JYT3M-3	03-07-2021	03-06-2022
Cable	Bost	JYT3M-40G-SS-8M	JYT3M-4	04-02-2021	04-01-2022
EMI Test Software	Tonscend	TS+	Version:3.0.0.1		

Conducted method:					
Test Equipment	**Manufacturer**	**Model No.**	**Serial No.**	**Cal. Date (mm-dd-yy)**	**Cal. Due date (mm-dd-yy)**
Spectrum Analyzer	Keysight	N9020B	MY57431500	07-02-2021	07-01-2022
Simulated Station	Rohde & Schwarz	CMW500	108209	07-02-2021	07-01-2022
RF Control Unit	Tonscend	JS0806-1	N/A	N/A	N/A
Band Reject Filter Group	Tonscend	JS0806-F	21A8060360	N/A	N/A
Test Software	Tonscend	TS+	Version: 2.6.9.0526		

6. Test results

6.1 Conducted Output Power, ERP and EIRP

Test Requirement:	Part 27.50 (h)(2)
Limit:	LTE Band 7: 2W
Test Setup:	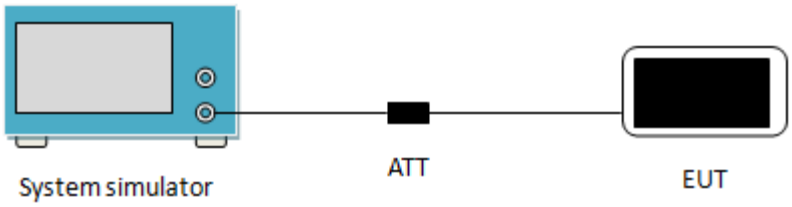
Test Procedure:	The transmitter output was connected to a calibrated attenuator, the other end of which was connected to the CMW500. Transmitter output power was read off in dBm.
Test Instruments:	Refer to section 5.10 for details
Test mode:	Refer to section 5.3 for details
Test results:	Passed

Measurement Data: Refer to Appendix A – LTE

6.2 Peak-to-Average Ratio

Test Requirement:	Part 27.50(d)(5)
Limit:	The peak-to-average ratio (PAR) of the transmission may not exceed 13 dB.
Test Setup:	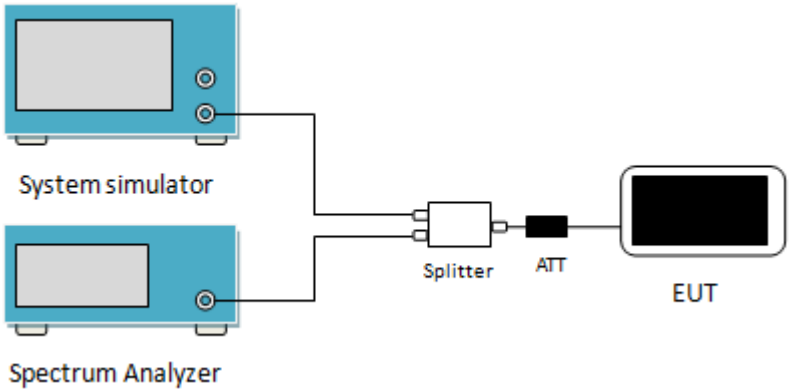
Test Procedure:	1 The RF output of the transceiver was connected to a spectrum analyzer through appropriate attenuation. 2 Set the CCDF option in spectrum analyzer, RBW ≥ OBW, 3 Set the EUT working in highest power level, measured and recorded the 0.1% as PAPR level. 4 Repeat step 1~3 at other frequency and modulations.
Test Instruments:	Refer to section 5.10 for details
Test mode:	Refer to section 5.3 for details
Test results:	Passed

Measurement Data: Refer to Appendix B – LTE

6.3 Occupy Bandwidth

Test Requirement:	Part 27.53(m)
Test Setup:	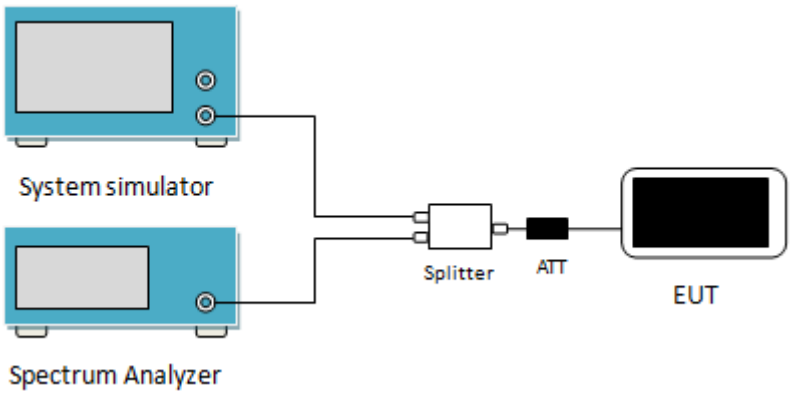
Test Procedure:	1. The EUT's output RF connector was connected with a short cable to the spectrum analyzer 2. RBW was set to about 1% ~ 5% of emission BW, VBW= 3 times RBW. 3. -26dBc display line was placed on the screen (or 99% bandwidth), the occupied bandwidth is the delta frequency between the two points where the display line intersects the signal trace.
Test Instruments:	Refer to section 5.10 for details
Test mode:	Refer to section 5.3 for details
Test results:	Passed

Measurement Data: Refer to Appendix C – LTE

6.4 Out of band emission at antenna terminals

Test Requirement:	Part 27.53(m)
Limit:	LTE Band 7: For mobile digital stations, the attenuation factor shall be not less than 40 + 10 log (P) dB on all frequencies between the channel edge and 5 megahertz from the channel edge, 43 + 10 log (P) dB on all frequencies between 5 megahertz and X megahertz from the channel edge, and 55 + 10 log (P) dB on all frequencies more than X megahertz from the channel edge, where X is the greater of 6 megahertz or the actual emission bandwidth as defined in paragraph (m)(6) of this section. In addition, the attenuation factor shall not be less that 43 + 10 log (P) dB on all frequencies between 2490.5 MHz and 2496 MHz and 55 + 10 log (P) dB at or below 2490.5 MHz.
Test Setup:	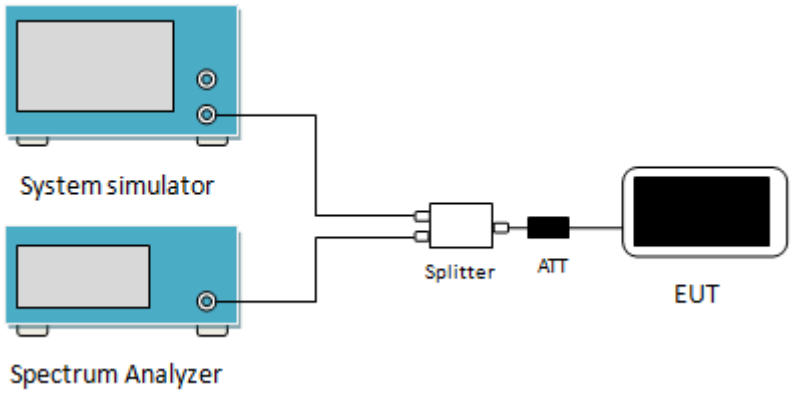
Test Procedure:	1 The RF output of the transceiver was connected to a spectrum analyzer through appropriate attenuation. 2 For the out of band: For Band 5 & 12 & 17 set the RBW=100 kHz, VBW=300 kHz and for Band 2 & 4 & 7 set the RBW=1 MHz, VBW=3 MHz when below 1 GHz, RBW =1 MHz, VBW=3 MHz when above 1 GHz, Start=30MHz, Stop= 10th harmonic. 3 Band Edge Requirements: In the 1 MHz bands immediately outside and adjacent to the frequency block, a resolution bandwidth of at least 1 percent of the emission bandwidth of the fundamental emission of the transmitter may be employed to measure the out of band Emissions.
Test Instruments:	Refer to section 5.10 for details
Test mode:	Refer to section 5.3 for details
Test results:	Passed
Remark:	Pre-scan all RB Size and offset, and found the RB Size and offset of worst case, so the report shows only the worst case test data.

Measurement Data:
Band edge emission: Refer to Appendix D – LTE

Spurious emission: Refer to Appendix E – LTE

6.5 Field strength of spurious radiation measurement

Test Requirement:	Part 27.53(m)
Limit:	LTE Band 7: For mobile digital stations, the attenuation factor shall be not less than 40 + 10 log (P) dB on all frequencies between the channel edge and 5 megahertz from the channel edge, 43 + 10 log (P) dB on all frequencies between 5 megahertz and X megahertz from the channel edge, and 55 + 10 log (P) dB on all frequencies more than X megahertz from the channel edge, where X is the greater of 6 megahertz or the actual emission bandwidth as defined in paragraph (m)(6) of this section. In addition, the attenuation factor shall not be less that 43 + 10 log (P) dB on all frequencies between 2490.5 MHz and 2496 MHz and 55 + 10 log (P) dB at or below 2490.5 MHz.
Test setup:	Below 1GHz 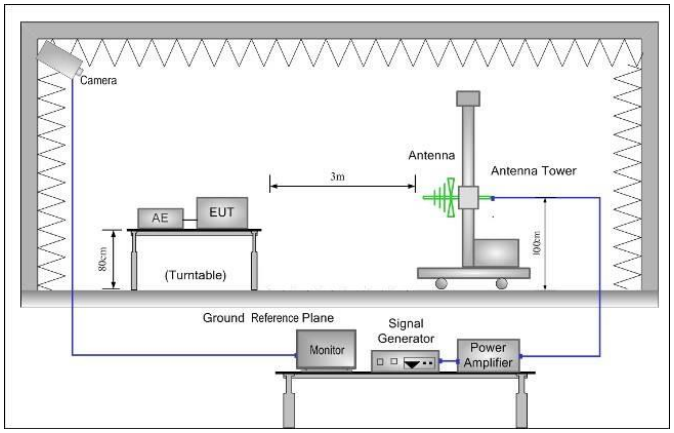 Above 1GHz 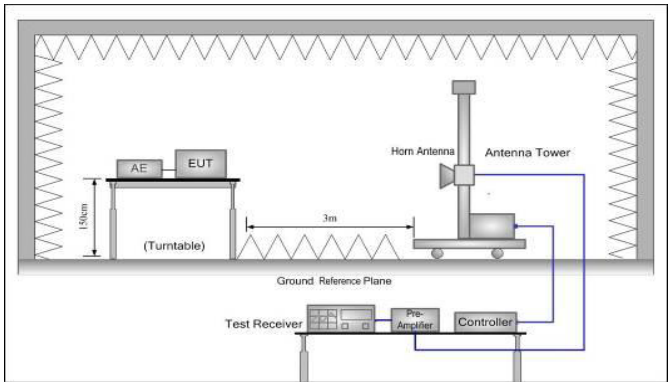
Test Procedure:	1. The EUT was placed on the top of a rotating table 0.8m(below 1GHz)/1.5m(above 1GHz) above the ground at a 3 meter camber. The radiated emission at the fundamental frequency was measured at 3 m with a test antenna and EMI spectrum analyzer. 2. During the tests, the antenna height and the EUT azimuth were varied in order to identify the maximum level of emissions from the EUT. This maximization process was repeated with the EUT positioned in each of its three orthogonal orientations. 3. The frequency range up to tenth harmonic was investigated for each of three fundamental frequency (low, middle and high channels). Once spurious emission was identified, the power of the emission was determined using the substitution method. 4. The spurious emissions attenuation was calculated as the difference between radiated power at the fundamental frequency and the spurious emissions frequency. ERP / EIRP = S.G. output (dBm) + Antenna Gain(dB/dBi) – Cable

	Loss (dB)
Test Instruments:	Refer to section 5.10 for details
Test mode:	Refer to section 5.3 for details.
Test results:	Passed

Measurement Data:

LTE Band 7 part:

Band 7 (5MHz)						
Lowest channel						
Frequency (MHz)	Spurous Emission level (dBm)	Factor (dB)	Level at antenna terminals (dBm)	Limit Line (dBm)	Margin (dB)	Polarization
5005.00	-47.76	4.56	-43.20	-25.00	18.20	Vertical
7507.50	-50.04	13.14	-36.90	-25.00	11.90	Vertical
10010.00	-50.13	16.93	-33.20	-25.00	8.20	Vertical
5005.00	-48.40	4.56	-43.84	-25.00	18.84	Horizontal
7507.50	-50.25	13.14	-37.11	-25.00	12.11	Horizontal
10010.00	-50.05	16.93	-33.12	-25.00	8.12	Horizontal
Middle channel						
Frequency (MHz)	Spurous Emission level (dBm)	Factor (dB)	Level at antenna terminals (dBm)	Limit Line (dBm)	Margin (dB)	Polarization
5070.00	-48.09	4.55	-43.54	-25.00	18.54	Vertical
7605.00	-49.94	13.58	-36.36	-25.00	11.36	Vertical
10140.00	-50.34	17.44	-32.90	-25.00	7.90	Vertical
5070.00	-48.70	4.55	-44.15	-25.00	19.15	Horizontal
7605.00	-50.31	13.58	-36.73	-25.00	11.73	Horizontal
10140.00	-49.60	17.44	-32.16	-25.00	7.16	Horizontal
Highest channel						
Frequency (MHz)	Spurous Emission level (dBm)	Factor (dB)	Level at antenna terminals (dBm)	Limit Line (dBm)	Margin (dB)	Polarization
5135.00	-47.89	4.62	-43.27	-25.00	18.27	Vertical
7702.50	-49.57	13.24	-36.33	-25.00	11.33	Vertical
10270.00	-50.55	18.40	-32.15	-25.00	7.15	Vertical
5135.00	-48.89	4.62	-44.27	-25.00	19.27	Horizontal
7702.50	-50.00	13.24	-36.76	-25.00	11.76	Horizontal
10270.00	-49.97	18.40	-31.57	-25.00	6.57	Horizontal
Remark: *The emission levels of below 1 GHz are lower than the limit 20dB and not show in test report.*						

Band 7 (20MHz)						
Lowest channel						
Frequency (MHz)	Spurous Emission level (dBm)	Factor (dB)	Level at antenna terminals (dBm)	Limit Line (dBm)	Margin (dB)	Polarization
5020.00	-48.35	4.56	-43.79	-25.00	18.79	Vertical
7530.00	-49.33	13.29	-36.04	-25.00	11.04	Vertical
10040.00	-50.67	16.98	-33.69	-25.00	8.69	Vertical
5020.00	-49.31	4.56	-44.75	-25.00	19.75	Horizontal
7530.00	-49.82	13.29	-36.53	-25.00	11.53	Horizontal
10040.00	-49.93	16.98	-32.95	-25.00	7.95	Horizontal
Middle channel						
Frequency (MHz)	Spurous Emission level (dBm)	Factor (dB)	Level at antenna terminals (dBm)	Limit Line (dBm)	Margin (dB)	Polarization
5070.00	-49.06	4.55	-44.51	-25.00	19.51	Vertical
7605.00	-49.74	13.58	-36.16	-25.00	11.16	Vertical
10140.00	-50.43	17.44	-32.99	-25.00	7.99	Vertical
5070.00	-49.04	4.55	-44.49	-25.00	19.49	Horizontal
7605.00	-49.66	13.58	-36.08	-25.00	11.08	Horizontal
10140.00	-49.44	17.44	-32.00	-25.00	7.00	Horizontal
Highest channel						
Frequency (MHz)	Spurous Emission level (dBm)	Factor (dB)	Level at antenna terminals (dBm)	Limit Line (dBm)	Margin (dB)	Polarization
5120.00	-48.14	4.62	-43.52	-25.00	18.52	Vertical
7680.00	-49.00	13.18	-35.82	-25.00	10.82	Vertical
10240.00	-50.37	18.27	-32.10	-25.00	7.10	Vertical
5120.00	-49.35	4.62	-44.73	-25.00	19.73	Horizontal
7680.00	-49.70	13.18	-36.52	-25.00	11.52	Horizontal
10240.00	-50.17	18.27	-31.90	-25.00	6.90	Horizontal

Remark:

The emission levels of below 1 GHz are lower than the limit 20dB and not show in test report.

6.6 Frequency stability V.S. Temperature measurement

Test Requirement:	Part 27.54, Part 2.1055(a)(1)(b)
Limit:	Within authorized band for Band 7
Test setup:	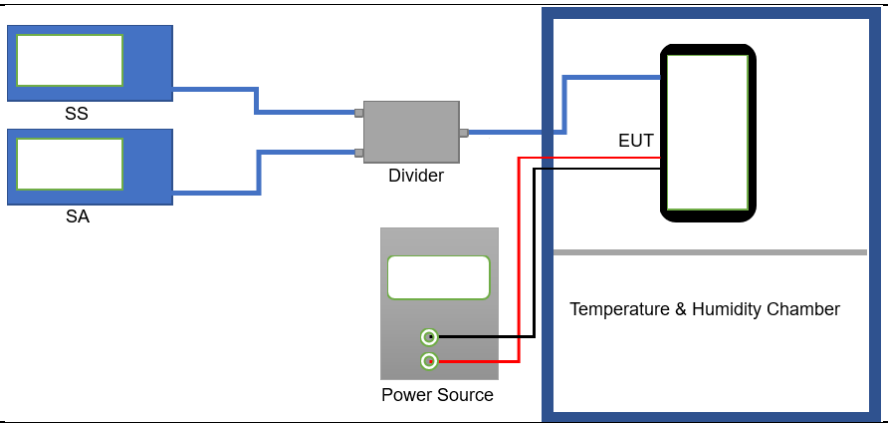
Test procedure:	1. The equipment under test was connected to an external DC power supply and input rated voltage. 2. RF output was connected to a frequency counter or spectrum analyzer via feed through attenuators. 3. The EUT was placed inside the temperature chamber. 4. Set the spectrum analyzer RBW low enough to obtain the desired frequency resolution and measure EUT 25℃ operating frequency as reference frequency. 5. Turn EUT off and set the chamber temperature to –30℃. After the temperature stabilized for approximately 30 minutes recorded the frequency. 6. Repeat step measure with 10℃ increased per stage until the highest temperature of +50℃ reached
Test Instruments:	Refer to section 5.10 for details
Test mode:	Refer to section 5.3 for details
Test results:	Passed

Measurement Data: Refer to Appendix F – LTE

6.7 Frequency stability V.S. Voltage measurement

Test Requirement:	Part 27.54, Part 2.1055(d)(2)
Limit:	Within authorized band for Band 7
Test setup:	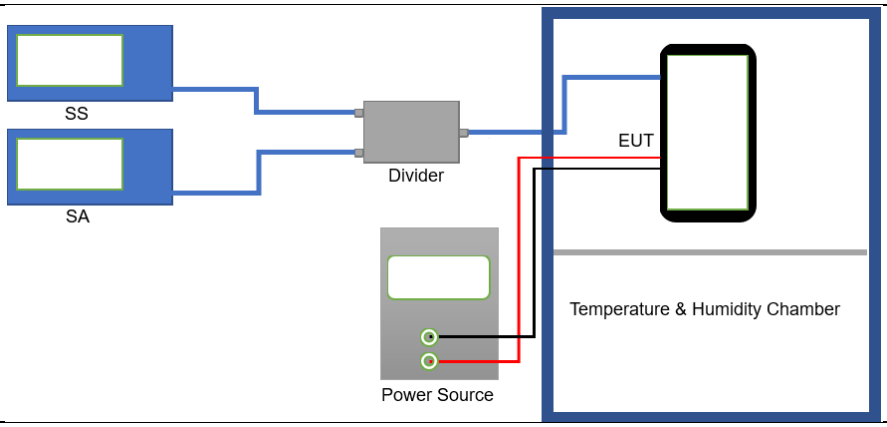
Test procedure:	1. Set chamber temperature to 25℃. Use a variable DC power source to power the EUT and set the voltage to rated voltage. 2. Set the spectrum analyzer RBW low enough to obtain the desired frequency resolution and recorded the frequency. 3. Reduce the input voltage to specify extreme voltage variation (+/-15%) and endpoint, record the maximum frequency change.
Test Instruments:	Refer to section 5.10 for details
Test mode:	Refer to section 5.3 for details
Test results:	Passed

Measurement Data: Refer to Appendix F – LTE

8 EUT Constructional Details

Reference to the test report No. JYTSZB-R01-2100868.

------End of report------