Lenovo Archer Quick Start Guide (ANDROID)

* For reference only, please refer to our actual product.

* keyboard is only for Archer Tablet 2-10xx.
The “xx” represent tablet module number, such as: 50F

Learn more

For more information about tablet functions and useful manuals, go to http://support.lenovo.com/. To read this manual on your tablet, please access “User Guide” from the Browser favorites in your tablet.

Getting support

For support on network service and billing, please contact your wireless network operator. For instructions on how to use your tablet, go to http://support.lenovo.com/ .

Legal notices

Lenovo and the Lenovo logo are trademarks of Lenovo in the United States, other countries, or both.

Other company, product, or service names may be trademarks or service marks of others.

First Edition (August 2014)

© Copyright Lenovo 2014.

Reduce | Reuse | Recycle

FPO

252-01467L-A0XUS

Printed in China

Specifications

Bluetooth version	3.0	Battery life	>75 days①
Battery capacity	165 mAh	Type	CR 2025 com Type
		Wireless range	10 m

Special function keys

Application & Access

Android: Android home

Search

Android: Android menu

prtsc Save screen image

Volume

Mute

Turn volume down

Turn volume up

Media controls

Previous

Next

Play/Pause

STOP

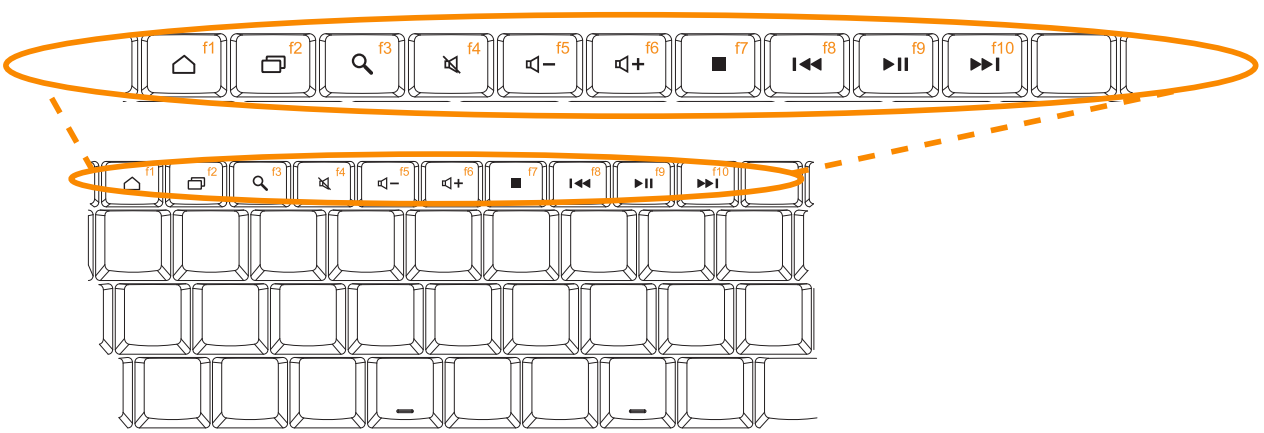

① Calculated by 2 hours in normal daily use.

* Key can not use on Android OS.

Introduction*

The Bluetooth Keyboard Cover can be used to control a tablet using distinctive orange combination keys (for details, see special function keys) .
The keyboard and the tablet can be combined for easy carrying.

Bluetooth Pairing

Turn the keyboard's power switch to power up the keyboard. The keyboard will attempt to connect to last connected device. The indicator will be blue.
If the keyboard has been turned on, and no indicator is flashing after the pairing switch has been set to Bluetooth for more than one second, the keyboard will enter into pairing mode to pair with the tablet, and the keyboard can be discovered by other devices.
If the pairing is successful, the indicator will turn off.

Battery Change

When LED keep flashing RED, It means battery needs to change, please take battery out and change battery, please use standard CR-2025L/BN coin battery to prevent damage of key board.

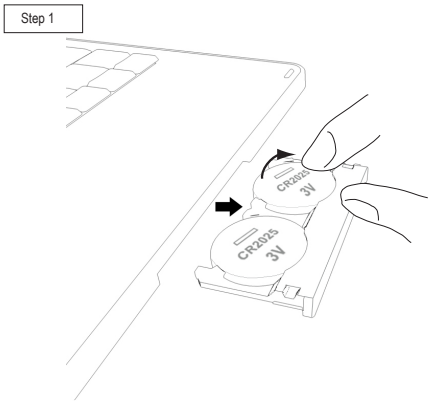

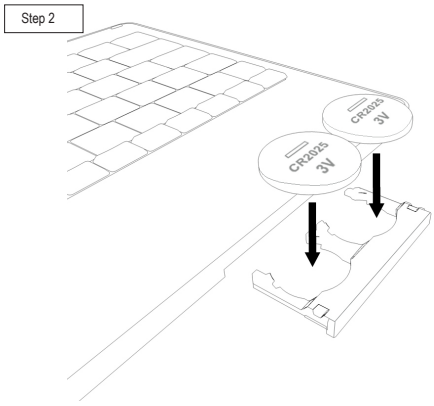

Status indicator

Flashing red	The battery capacity is insufficient.
Flashing blue quickly	Attempting to connect to last connected device. If it connects successfully, the indicator will turn off after being on for two seconds.
Flashing blue slowly	The keyboard is in the pairing mode and can be discovered by other devices. If the pairing is successful, the indicator will turn off after being on for two seconds.

Combining with a tablet and folio

When not to use, caefully insert keyboard into folio holder and attached key board to folio, the magnetic clip will hold the keyboard in posotion. When using the tablet, open the folio cover to use the standing position.

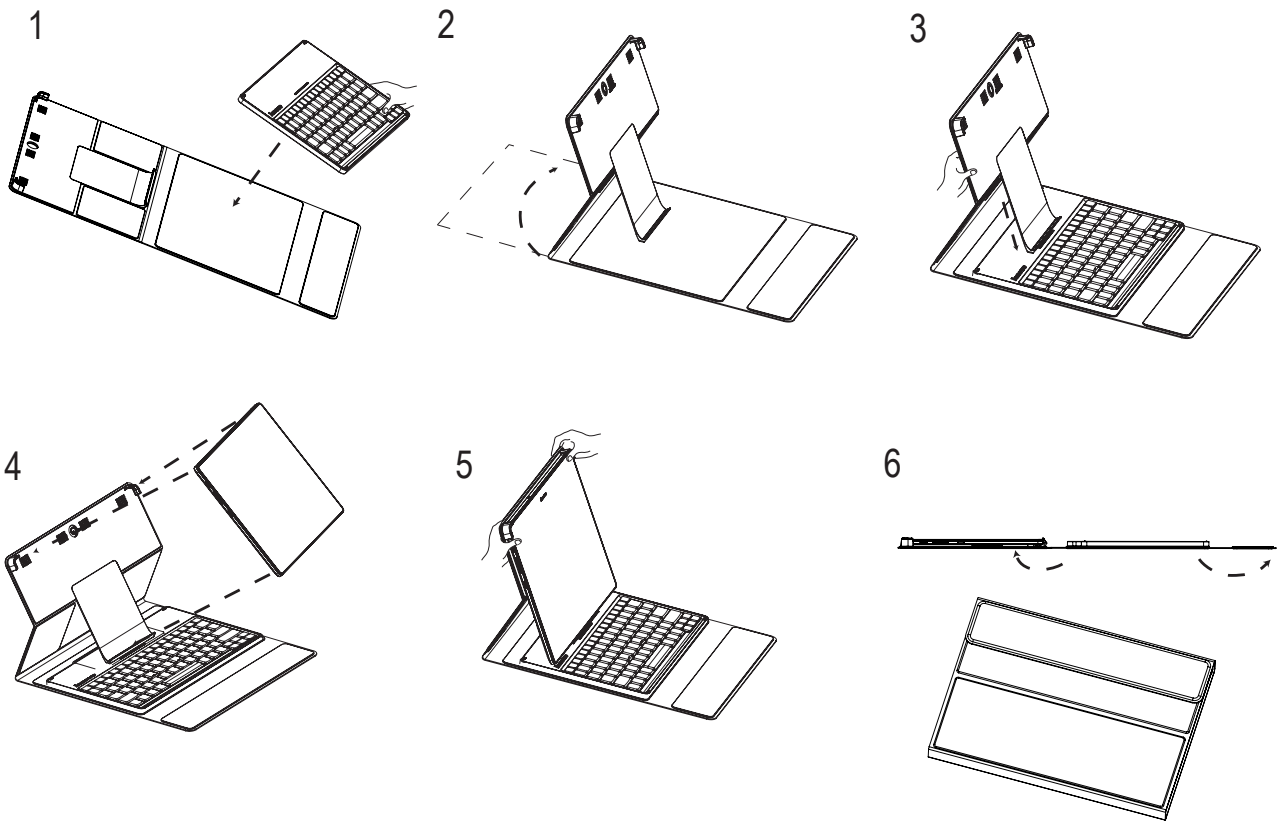

Connecting to a tablet setup

Before using the Bluetooth Keyboard Cover for the first time, connect it to the tablet.

Step1: Turn the keyboard's power switch on. Wait for the LED to stop flashing and then set the pairing switch to the Bluetooth logo for one second or longer.

The status indicator on the keyboard will flash quickly, and the keyboard can be discovered by other devices.

Step 2: On the tablet, choose Settings > Bluetooth and set Bluetooth to “On” .

Step 3: A prompt indicating that the keyboard is SEARCHING is displayed in the center of the tablet screen. If no prompt is displayed, select SEARCH FOR DEVICE in the upper right corner of the tablet screen.

Step 4: Select Lenovo Archer Keyboard from the list of available devices on the tablet screen. When the prompt indicating that the Archer has been connected is displayed, the keyboard has successfully connected to the tablet.

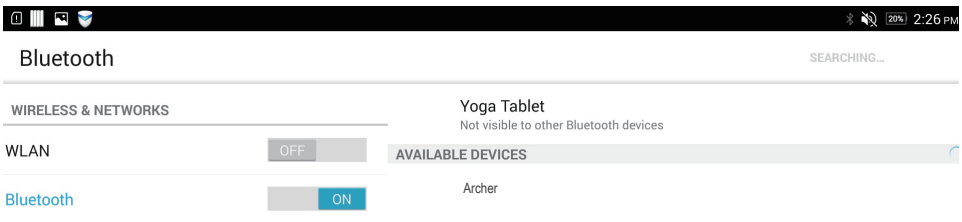

If the Bluetooth Keyboard Cover has previously connected to the tablet successfully, it will automatically connect to the tablet via Bluetooth when it is turned on. If the connection fails, check the tablet to see if Bluetooth is set to ON and then reconnect using the previous four steps.

Selecting the Preferred Language

After paring with the tablet, please follow the steps and the image below to select your preferred language.
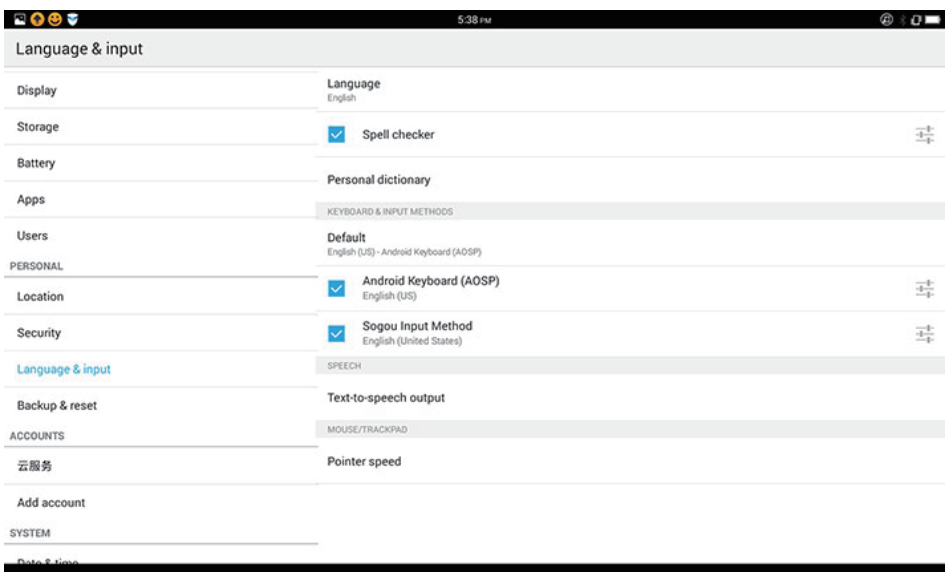
1. In the tablet setting menu, choose Language & Input
2. Select the language you want to use.
3. In keyboard & Input Methods, select the keyboard language you want to use.