FCC SAR Test Report

APPLICANT	:	Lenovo (Shanghai) Electronics Technology Co., Ltd.
EQUIPMENT	:	Portable Tablet Computer
BRAND NAME	:	lenovo
MODEL NAME	:	Lenovo TAB 2 A10-70F
FCC ID	:	O57TAB2A1070F
STANDARD	:	FCC 47 CFR Part 2 (2.1093) ANSI/IEEE C95.1-1992 IEEE 1528-2003

We, SPORTON INTERNATIONAL (KUNSHAN) INC., would like to declare that the tested sample has been evaluated in accordance with the procedures and had been in compliance with the applicable technical standards.

The test results in this report apply exclusively to the tested model / sample. Without written approval of SPORTON INTERNATIONAL (KUNSHAN) INC., the test report shall not be reproduced except in full.

Reviewed by: Eric Huang / Deputy Manager

Approved by: Jones Tsai / Manager

Testing Laboratory
2627

SPORTON INTERNATIONAL (KUNSHAN) INC.
No. 3-2, PingXiang Road, Kunshan, Jiangsu Province, P. R. China

Table of Contents

1. Statement of Compliance 4
2. Administration Data 5
3. Guidance Standard 5
4. Equipment Under Test (EUT) 6
4.1 General Information 6
4.2 Maximum Tune-up Limit 7
5. RF Exposure Limits 8
5.1 Uncontrolled Environment 8
5.2 Controlled Environment 8
6. Specific Absorption Rate (SAR) 9
6.1 Introduction 9
6.2 SAR Definition 9
7. System Description and Setup 10
8. Measurement Procedures 11
8.1 Spatial Peak SAR Evaluation 11
8.2 Power Reference Measurement 12
8.3 Area Scan 12
8.4 Zoom Scan 13
8.5 Volume Scan Procedures 13
8.6 Power Drift Monitoring 13
9. Test Equipment List 14
10. System Verification 15
10.1 Tissue Verification 15
10.2 System Performance Check Results 16
11. RF Exposure Positions 17
11.1 SAR Testing for Tablet 17
12. Conducted RF Output Power (Unit: dBm) 18
13. Bluetooth Exclusions Applied 21
14. Antenna Location 22
15. SAR Test Results 24
15.1 Body SAR 25
15.2 Repeated SAR Measurement 26
16. Simultaneous Transmission Analysis 27
17. Uncertainty Assessment 28
18. References 31
Appendix A. Plots of System Performance Check
Appendix B. Plots of High SAR Measurement
Appendix C. DASY Calibration Certificate
Appendix D. Test Setup Photos

Revision History

REPORT NO.	VERSION	DESCRIPTION	ISSUED DATE
FA4D1801-01	Rev. 01	Initial issue of report	Jan. 29, 2015

1. Statement of Compliance

The maximum results of Specific Absorption Rate (SAR) found during testing for **Lenovo (Shanghai) Electronics Technology Co., Ltd., Portable Tablet Computer, Lenovo TAB 2 A10-70F**, are as follows.

Equipment Class	Frequency Band	Highest SAR Summary Body 1g SAR (W/kg) (0cm Gap)
DTS	WLAN 2.4GHz Band	1.14
NII	WLAN 5.2GHz Band	1.39
	WLAN 5.3GHz Band	**1.47**
	WLAN 5.5GHz Band	1.13
	WLAN 5.8GHz Band	1.15
DSS	Bluetooth	
Date of Testing:		Jan. 14, 2015 ~ Jan. 15, 2015

This device is in compliance with Specific Absorption Rate (SAR) for general population/uncontrolled exposure limits (1.6 W/kg) specified in FCC 47 CFR part 2 (2.1093) and ANSI/IEEE C95.1-1992, and had been tested in accordance with the measurement methods and procedures specified in IEEE 1528-2003.

2. Administration Data

Testing Laboratory	
Test Site	SPORTON INTERNATIONAL (KUNSHAN) INC.
Test Site Location	No. 3-2, PingXiang Road, Kunshan, Jiangsu Province, P. R. China TEL: +86-0512-5790-0158 FAX: +86-0512-5790-0958

Applicant	
Company Name	Lenovo (Shanghai) Electronics Technology Co., Ltd.
Address	No. 68 Building, 199 Fenju Road, Wai Gao Qiao FTZ, Shanghai, China

Manufacturer	
Company Name	Lenovo PC HK Limited
Address	23/F, Lincoln House, Taikoo Place 979 King's Road, Quarry Bay, Hong Kong

3. Guidance Standard

The Specific Absorption Rate (SAR) testing specification, method, and procedure for this device is in accordance with the following standards:

- FCC 47 CFR Part 2 (2.1093)
- ANSI/IEEE C95.1-1992
- IEEE 1528-2003
- FCC KDB 865664 D01 SAR Measurement 100 MHz to 6 GHz v01r03
- FCC KDB 865664 D02 SAR Reporting v01r01
- FCC KDB 447498 D01 General RF Exposure Guidance v05r02
- FCC KDB 248227 D01 SAR meas for 802 11abg v01r02
- FCC KDB 616217 D04 SAR for laptop and tablets v01r01

4. Equipment Under Test (EUT)

4.1 General Information

Product Feature & Specification	
Equipment Name	Portable Tablet Computer
Brand Name	lenovo
Model Name	Lenovo TAB 2 A10-70F
FCC ID	O57TAB2A1070F
Wireless Technology and Frequency Range	WLAN 2.4GHz Band: 2412 MHz ~ 2462 MHz WLAN 5.2GHz Band: 5180 MHz ~ 5240 MHz WLAN 5.3GHz Band: 5260 MHz ~ 5320 MHz WLAN 5.5GHz Band: 5500 MHz ~ 5700 MHz WLAN 5.8GHz Band: 5745 MHz ~ 5825 MHz Bluetooth: 2402 MHz ~ 2480 MHz
Mode	・802.11b/g/n HT20/HT40 ・802.11a ・Bluetooth v3.0+EDR, Bluetooth v4.0 LE
HW Version	A1990_MB_PCB_V2.0
SW Version	A7-30HC_S000007_141017_ROW
EUT Stage	Identical Prototype
Remark: 1. WLAN operation in 5600 MHz ~ 5650 MHz is notched. 2. Voice call is not supported. 3. For 802.11n mode disabled at WLAN 5GHz.	

4.2 Maximum Tune-up Limit

Band	Average Power (dBm)				
	IEEE 802.11				
	11a	11b	11g	11n-HT20	11n-HT40
WLAN 2.4GHz Band		13.5	12.5	13	11.5
WLAN 5.2GHz Band	11				
WLAN 5.5GHz Band	10				
WLAN 5.8GHz Band	12				

Average Power (dBm)	
Mode / Band	IEEE 802.11
WLAN 5.3GHz Band	11a
CH 52	11
CH 56	11
CH 60	10.5
CH 64	10.5

Mode / Band	Bluetooth	
	Bluetooth v3.0 + EDR	Bluetooth v4.0 LE
2.4GHz Bluetooth	6	0

5. RF Exposure Limits

5.1 Uncontrolled Environment

Uncontrolled Environments are defined as locations where there is the exposure of individuals who have no knowledge or control of their exposure. The general population/uncontrolled exposure limits are applicable to situations in which the general public may be exposed or in which persons who are exposed as a consequence of their employment may not be made fully aware of the potential for exposure or cannot exercise control over their exposure. Members of the general public would come under this category when exposure is not employment-related; for example, in the case of a wireless transmitter that exposes persons in its vicinity.

5.2 Controlled Environment

Controlled Environments are defined as locations where there is exposure that may be incurred by persons who are aware of the potential for exposure, (i.e. as a result of employment or occupation). In general, occupational/controlled exposure limits are applicable to situations in which persons are exposed as a consequence of their employment, who have been made fully aware of the potential for exposure and can exercise control over their exposure. The exposure category is also applicable when the exposure is of a transient nature due to incidental passage through a location where the exposure levels may be higher than the general population/uncontrolled limits, but the exposed person is fully aware of the potential for exposure and can exercise control over his or her exposure by leaving the area or by some other appropriate means.

Limits for Occupational/Controlled Exposure (W/kg)

Whole-Body	Partial-Body	Hands, Wrists, Feet and Ankles
0.4	8.0	20.0

Limits for General Population/Uncontrolled Exposure (W/kg)

Whole-Body	Partial-Body	Hands, Wrists, Feet and Ankles
0.08	1.6	4.0

Whole-Body SAR is averaged over the entire body, partial-body SAR is averaged over any 1gram of tissue defined as a tissue volume in the shape of a cube. SAR for hands, wrists, feet and ankles is averaged over any 10 grams of tissue defined as a tissue volume in the shape of a cube.

6. Specific Absorption Rate (SAR)

6.1 Introduction

SAR is related to the rate at which energy is absorbed per unit mass in an object exposed to a radio field. The SAR distribution in a biological body is complicated and is usually carried out by experimental techniques or numerical modeling. The standard recommends limits for two tiers of groups, occupational/controlled and general population/uncontrolled, based on a person's awareness and ability to exercise control over his or her exposure. In general, occupational/controlled exposure limits are higher than the limits for general population/uncontrolled.

6.2 SAR Definition

The SAR definition is the time derivative (rate) of the incremental energy (dW) absorbed by (dissipated in) an incremental mass (dm) contained in a volume element (dv) of a given density (ρ). The equation description is as below:

$$\mathbf{SAR} = \frac{\mathbf{d}}{\mathbf{dt}}\left(\frac{\mathbf{dW}}{\mathbf{dm}}\right) = \frac{\mathbf{d}}{\mathbf{dt}}\left(\frac{\mathbf{dW}}{\boldsymbol{\rho}\mathbf{dv}}\right)$$

SAR is expressed in units of Watts per kilogram (W/kg)

$$\mathbf{SAR} = \frac{\boldsymbol{\sigma}|\mathbf{E}|^{\mathbf{2}}}{\boldsymbol{\rho}}$$

Where: σ is the conductivity of the tissue, ρ is the mass density of the tissue and E is the RMS electrical field strength.

7. System Description and Setup

The DASY system used for performing compliance tests consists of the following items:

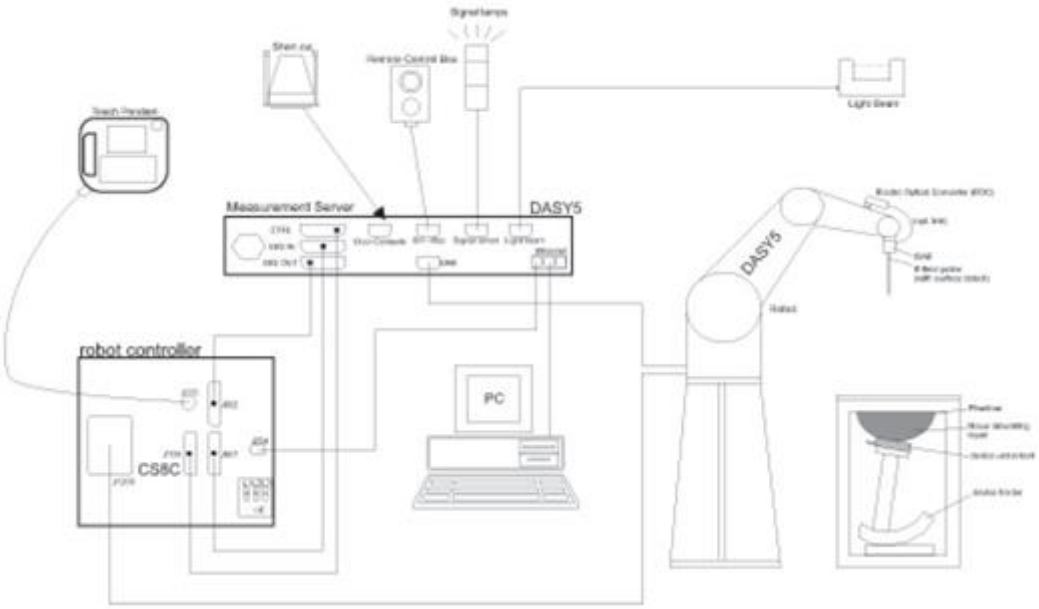

- A standard high precision 6-axis robot with controller, teach pendant and software. An arm extension for accommodating the data acquisition electronics (DAE).
- An isotropic Field probe optimized and calibrated for the targeted measurement.
- A data acquisition electronics (DAE) which performs the signal amplification, signal multiplexing, AD-conversion, offset measurements, mechanical surface detection, collision detection, etc. The unit is battery powered with standard or rechargeable batteries. The signal is optically transmitted to the EOC.
- The Electro-optical converter (EOC) performs the conversion from optical to electrical signals for the digital communication to the DAE. To use optical surface detection, a special version of the EOC is required. The EOC signal is transmitted to the measurement server.
- The function of the measurement server is to perform the time critical tasks such as signal filtering, control of the robot operation and fast movement interrupts.
- The Light Beam used is for probe alignment. This improves the (absolute) accuracy of the probe positioning.
- A computer running WinXP or Win7 and the DASY5 software.
- Remote control and teach pendant as well as additional circuitry for robot safety such as warning lamps, etc.
- The phantom, the device holder and other accessories according to the targeted measurement.

8. Measurement Procedures

The measurement procedures are as follows:

<Conducted power measurement>

(a) For WLAN/BT power measurement, use engineering software to configure EUT WLAN/BT continuously transmission, at maximum RF power in each supported wireless interface and frequency band
(b) Connect EUT RF port through RF cable to the power meter, and measure WLAN/BT output power

<SAR measurement>

(a) Use engineering software to configure EUT WLAN/BT continuously transmission, at maximum RF power, in the highest power channel.
(b) Place the EUT in the positions as Appendix D demonstrates.
(c) Set scan area, grid size and other setting on the DASY software.
(d) Measure SAR results for the highest power channel on each testing position.
(e) Find out the largest SAR result on these testing positions of each band
(f) Measure SAR results for other channels in worst SAR testing position if the reported SAR of highest power channel is larger than 0.8 W/kg

According to the test standard, the recommended procedure for assessing the peak spatial-average SAR value consists of the following steps:

(a) Power reference measurement
(b) Area scan
(c) Zoom scan
(d) Power drift measurement

8.1 Spatial Peak SAR Evaluation

The procedure for spatial peak SAR evaluation has been implemented according to the test standard. It can be conducted for 1g and 10g, as well as for user-specific masses. The DASY software includes all numerical procedures necessary to evaluate the spatial peak SAR value.

The base for the evaluation is a "cube" measurement. The measured volume must include the 1g and 10g cubes with the highest averaged SAR values. For that purpose, the center of the measured volume is aligned to the interpolated peak SAR value of a previously performed area scan.

The entire evaluation of the spatial peak values is performed within the post-processing engine (SEMCAD). The system always gives the maximum values for the 1g and 10g cubes. The algorithm to find the cube with highest averaged SAR is divided into the following stages:

(a) Extraction of the measured data (grid and values) from the Zoom Scan
(b) Calculation of the SAR value at every measurement point based on all stored data (A/D values and measurement parameters)
(c) Generation of a high-resolution mesh within the measured volume
(d) Interpolation of all measured values form the measurement grid to the high-resolution grid
(e) Extrapolation of the entire 3-D field distribution to the phantom surface over the distance from sensor to surface
(f) Calculation of the averaged SAR within masses of 1g and 10g

8.2 Power Reference Measurement

The Power Reference Measurement and Power Drift Measurements are for monitoring the power drift of the device under test in the batch process. The minimum distance of probe sensors to surface determines the closest measurement point to phantom surface. This distance cannot be smaller than the distance of sensor calibration points to probe tip as defined in the probe properties.

8.3 Area Scan

The area scan is used as a fast scan in two dimensions to find the area of high field values, before doing a fine measurement around the hot spot. The sophisticated interpolation routines implemented in DASY software can find the maximum found in the scanned area, within a range of the global maximum. The range (in dB0 is specified in the standards for compliance testing. For example, a 2 dB range is required in IEEE standard 1528 and IEC 62209 standards, whereby 3 dB is a requirement when compliance is assessed in accordance with the ARIB standard (Japan), if only one zoom scan follows the area scan, then only the absolute maximum will be taken as reference. For cases where multiple maximums are detected, the number of zoom scans has to be increased accordingly.

Area scan parameters extracted from FCC KDB 865664 D01v01r03 SAR measurement 100 MHz to 6 GHz.

	≤ 3 GHz	> 3 GHz
Maximum distance from closest measurement point (geometric center of probe sensors) to phantom surface	5 ± 1 mm	½·δ·ln(2) ± 0.5 mm
Maximum probe angle from probe axis to phantom surface normal at the measurement location	30° ± 1°	20° ± 1°
Maximum area scan spatial resolution: Δx_{Area}, Δy_{Area}	≤ 2 GHz: ≤ 15 mm 2 – 3 GHz: ≤ 12 mm	3 – 4 GHz: ≤ 12 mm 4 – 6 GHz: ≤ 10 mm
	When the x or y dimension of the test device, in the measurement plane orientation, is smaller than the above, the measurement resolution must be ≤ the corresponding x or y dimension of the test device with at least one measurement point on the test device.	

8.4 Zoom Scan

Zoom scans are used assess the peak spatial SAR values within a cubic averaging volume containing 1 gram and 10 gram of simulated tissue. The zoom scan measures points (refer to table below) within a cube shoes base faces are centered on the maxima found in a preceding area scan job within the same procedure. When the measurement is done, the zoom scan evaluates the averaged SAR for 1 gram and 10 gram and displays these values next to the job's label.

Zoom scan parameters extracted from FCC KDB 865664 D01v01r03 SAR measurement 100 MHz to 6 GHz.

			≤ 3 GHz	> 3 GHz
Maximum zoom scan spatial resolution: Δx_{Zoom}, Δy_{Zoom}			≤ 2 GHz: ≤ 8 mm 2 – 3 GHz: ≤ 5 mm*	3 – 4 GHz: ≤ 5 mm* 4 – 6 GHz: ≤ 4 mm*
Maximum zoom scan spatial resolution, normal to phantom surface	uniform grid: $\Delta z_{Zoom}(n)$		≤ 5 mm	3 – 4 GHz: ≤ 4 mm 4 – 5 GHz: ≤ 3 mm 5 – 6 GHz: ≤ 2 mm
	graded grid	$\Delta z_{Zoom}(1)$: between 1st two points closest to phantom surface	≤ 4 mm	3 – 4 GHz: ≤ 3 mm 4 – 5 GHz: ≤ 2.5 mm 5 – 6 GHz: ≤ 2 mm
		$\Delta z_{Zoom}(n>1)$: between subsequent points	$\leq 1.5 \cdot \Delta z_{Zoom}(n-1)$	
Minimum zoom scan volume	x, y, z		≥ 30 mm	3 – 4 GHz: ≥ 28 mm 4 – 5 GHz: ≥ 25 mm 5 – 6 GHz: ≥ 22 mm

Note: δ is the penetration depth of a plane-wave at normal incidence to the tissue medium; see draft standard IEEE P1528-2011 for details.

* When zoom scan is required and the *reported* SAR from the *area scan based 1-g SAR estimation* procedures of KDB 447498 is ≤ 1.4 W/kg, ≤ 8 mm, ≤ 7 mm and ≤ 5 mm zoom scan resolution may be applied, respectively, for 2 GHz to 3 GHz, 3 GHz to 4 GHz and 4 GHz to 6 GHz.

8.5 Volume Scan Procedures

The volume scan is used for assess overlapping SAR distributions for antennas transmitting in different frequency bands. It is equivalent to an oversized zoom scan used in standalone measurements. The measurement volume will be used to enclose all the simultaneous transmitting antennas. For antennas transmitting simultaneously in different frequency bands, the volume scan is measured separately in each frequency band. In order to sum correctly to compute the 1g aggregate SAR, the EUT remain in the same test position for all measurements and all volume scan use the same spatial resolution and grid spacing. When all volume scan were completed, the software, SEMCAD postprocessor can combine and subsequently superpose these measurement data to calculating the multiband SAR.

8.6 Power Drift Monitoring

All SAR testing is under the EUT install full charged battery and transmit maximum output power. In DASY measurement software, the power reference measurement and power drift measurement procedures are used for monitoring the power drift of EUT during SAR test. Both these procedures measure the field at a specified reference position before and after the SAR testing. The software will calculate the field difference in dB. If the power drifts more than 5%, the SAR will be retested.

9. Test Equipment List

Manufacturer	Name of Equipment	Type/Model	Serial Number	Calibration	
				Last Cal.	Due Date
SPEAG	2450MHz System Validation Kit	D2450V2	736	Aug. 21, 2014	Aug. 20, 2015
SPEAG	5000MHz System Validation Kit	D5GHzV2	1128	Jul. 22, 2014	Jul. 21, 2015
SPEAG	Data Acquisition Electronics	DAE4	1210	May 19, 2014	May 18, 2015
SPEAG	Dosimetric E-Field Probe	EX3DV4	3857	May 23, 2014	May 22, 2015
SPEAG	ELI4 Phantom	QD OVA 001 BB	TP-1079	NCR	NCR
SPEAG	Phone Positioner	N/A	N/A	NCR	NCR
Agilent	Wireless Communication Test Set	E5515C	MY52102706	May 03, 2014	May 02, 2015
Agilent	ENA Series Network Analyzer	E5071C	MY46111157	May 04, 2014	May 03, 2015
Agilent	Dielectric Probe Kit	85070E	MY44300475	NCR	NCR
R&S	Signal Generator	SMBV100A	258305	Feb. 07, 2014	Feb. 06, 2015
Anritsu	Power Senor	MA2411B	0917070	Feb. 27, 2014	Feb. 26, 2015
Anritsu	Power Meter	ML2495A	1005002	Feb. 27, 2014	Feb. 26, 2015
ARRA	Power Divider	A3200-2	N/A	NA	NA
R&S	CBT Bluetooth tester	CBT	100783	Aug. 11, 2014	Aug. 10, 2015
R&S	Spectrum Analyzer	FSP40	100319	Oct. 28, 2014	Oct. 27, 2015
Agilent	Dual Directional Coupler	778D	50422	Note1	
Woken	Attenuator 1	WK0602-XX	N/A	Note1	
PE	Attenuator 2	PE7005-10	N/A	Note1	
PE	Attenuator 3	PE7005- 3	N/A	Note1	
AR	Power Amplifier	5S1G4M2	0328767	Note1	
Mini-Circuits	Power Amplifier	ZVE-3W	162601250	Note1	
Mini-Circuits	Power Amplifier	ZHL-42W+	13440021344	Note1	

General Note:

Prior to system verification and validation, the path loss from the signal generator to the system check source and the power meter, which includes the amplifier, cable, attenuator and directional coupler, was measured by the network analyzer. The reading of the power meter was offset by the path loss difference between the path to the power meter and the path to the system check source to monitor the actual power level fed to the system check source.

10. System Verification

10.1 Tissue Verification

The following tissue formulations are provided for reference only as some of the parameters have not been thoroughly verified. The composition of ingredients may be modified accordingly to achieve the desired target tissue parameters required for routine SAR evaluation.

Frequency (MHz)	Water (%)	Sugar (%)	Cellulose (%)	Salt (%)	Preventol (%)	DGBE (%)	Conductivity (σ)	Permittivity (εr)
For Body								
2450	68.6	0	0	0	0	31.4	1.95	52.7

Simulating Liquid for 5GHz, Manufactured by SPEAG

Ingredients	(% by weight)
Water	64~78%
Mineral oil	11~18%
Emulsifiers	9~15%
Additives and Salt	2~3%

<Tissue Dielectric Parameter Check Results>

Frequency (MHz)	Tissue Type	Liquid Temp. (℃)	Conductivity (σ)	Permittivity (ε_r)	Conductivity Target (σ)	Permittivity Target (ε_r)	Delta (σ) (%)	Delta (ε_r) (%)	Limit (%)	Date
2450	Body	22.8	1.939	51.385	1.95	52.7	-0.56	-2.50	±5	Jan. 14, 2015
5200	Body	22.7	5.162	48.492	5.30	49.0	-2.60	-1.04	±5	Jan. 15, 2015
5300	Body	22.7	5.301	48.290	5.42	48.9	-2.20	-1.25	±5	Jan. 15, 2015
5600	Body	22.7	5.716	47.645	5.77	48.5	-0.94	-1.76	±5	Jan. 15, 2015
5800	Body	22.7	5.976	47.158	6.00	48.2	-0.40	-2.16	±5	Jan. 15, 2015

10.2 System Performance Check Results

Comparing to the original SAR value provided by SPEAG, the verification data should be within its specification of 10 %. Below table shows the target SAR and measured SAR after normalized to 1W input power. The table below indicates the system performance check can meet the variation criterion and the plots can be referred to Appendix A of this report.

Date	Frequency (MHz)	Tissue Type	Input Power (mW)	Dipole S/N	Probe S/N	DAE S/N	Measured SAR (W/kg)	Targeted SAR (W/kg)	Normalized SAR (W/kg)	Deviation (%)
Jan. 14, 2015	2450	Body	250	736	3857	1210	12.4	50.6	49.6	-1.98
Jan. 15, 2015	5200	Body	100	1128	3857	1210	7.12	76.2	71.2	-6.56
Jan. 15, 2015	5300	Body	100	1128	3857	1210	7.54	77.7	75.4	-2.96
Jan. 15, 2015	5600	Body	100	1128	3857	1210	7.65	81.5	76.5	-6.13
Jan. 15, 2015	5800	Body	100	1128	3857	1210	7.13	75.9	71.3	-6.06

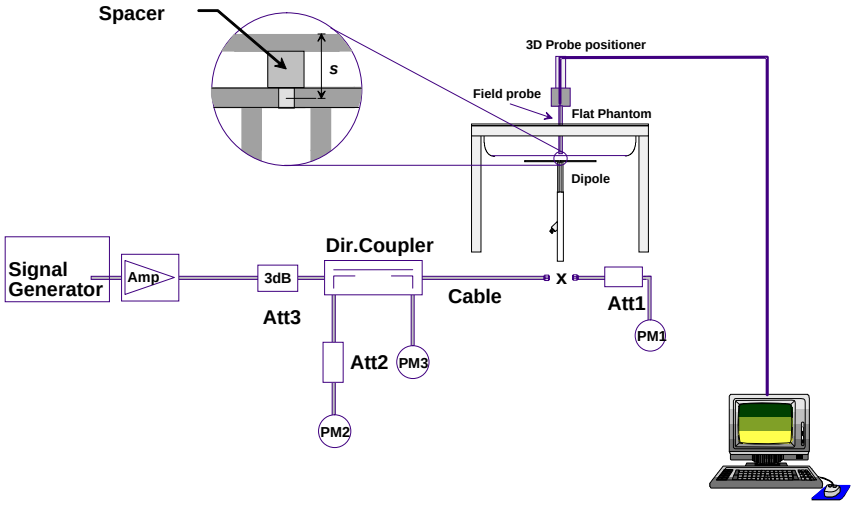

Fig 8.3.1 System Performance Check Setup

Fig 8.3.2 Setup Photo

11. RF Exposure Positions

11.1 SAR Testing for Tablet

This device can be used also in full sized tablet exposure conditions, due to its size. Per FCC KDB 616217, the back surface and edges of the tablet should be tested for SAR compliance with the tablet touching the phantom. The SAR exclusion threshold in KDB 447498 D01v05r02 can be applied to determine SAR test exclusion for adjacent edge configurations. The closest distance from the antenna to an adjacent tablet edge is used to determine if SAR testing is required for the adjacent edges, with the adjacent edge positioned against the phantom and the edge containing the antenna positioned perpendicular to the phantom.

12. Conducted RF Output Power (Unit: dBm)

<WLAN Conducted Power>

General Note:

1. For IEEE802.11a, highest average RF output power channel for the lowest data rate for 802.11a were selected for SAR evaluation.
2. For IEEE802.11b/g SAR testing, highest average RF output power channel for the lowest data rate for 802.11b were selected for SAR evaluation. 802.11g were not investigated since the average output powers over all channels and data rates were not more than 0.25 dB higher than the tested channel in the lowest data rate of 802.11b mode.
3. For IEEE802.11n, SAR testing can be conducted on channel with the highest output power when taking into consideration tune-up tolerance for same test configuration that was identified during SAR evaluations for IEEE802.11b/g (as applicable) provided bandwidth and test position are the same.
4. For IEEE802.11n with multiple channel BW configurations, highest channel BW configuration with highest output power limit shall be tested.
5. Testing of lower BW configurations is not required when the maximum average output of the default test channels in each lower BW configuration is less than 1/4dB higher than the default test channel in the highest BW configuration.

<2.4GHz WLAN>

WLAN 2.4GHz 802.11b Average Power (dBm)					
Power vs. Channel			Power vs. Data Rate		
Channel	Frequency (MHz)	Data Rate	2Mbps	5.5Mbps	11Mbps
		1Mbps			
CH 1	2412	12.74	12.90	12.97	12.79
CH 6	2437	12.92			
CH 11	2462	**12.98**			

WLAN 2.4GHz 802.11g Average Power (dBm)									
Power vs. Channel			Power vs. Data Rate						
Channel	Frequency (MHz)	Data Rate	9Mbps	12Mbps	18Mbps	24Mbps	36Mbps	48Mbps	54Mbps
		6Mbps							
CH 1	2412	11.86	12.34	12.32	12.26	12.29	12.33	12.30	12.32
CH 6	2437	12.12							
CH 11	2462	**12.37**							

WLAN 2.4GHz 802.11n-HT20 Average Power (dBm)									
Power vs. Channel			Power vs. MCS Index						
Channel	Frequency (MHz)	MCS Index	MCS1	MCS2	MCS3	MCS4	MCS5	MCS6	MCS7
		MCS0							
CH 1	2412	12.06	12.46	12.50	12.39	12.44	12.39	12.41	12.49
CH 6	2437	12.31							
CH 11	2462	**12.51**							

WLAN 2.4GHz 802.11n-HT40 Average Power (dBm)									
Power vs. Channel			Power vs. MCS Index						
Channel	Frequency (MHz)	MCS Index	MCS1	MCS2	MCS3	MCS4	MCS5	MCS6	MCS7
		MCS0							
CH 3	2422	10.89	10.94	10.96	10.78	10.85	10.80	10.89	10.87
CH 6	2437	10.81							
CH 9	2452	**11.05**							

<5GHz WLAN>

WLAN 5GHz 802.11a Average Power (dBm)									
Power vs. Channel			Power vs. Data Rate						
Channel	Frequency (MHz)	Data Rate	9Mbps	12Mbps	18Mbps	24Mbps	36Mbps	48Mbps	54Mbps
		6Mbps							
CH 36	5180	**10.54**	10.33	10.34	10.31	10.34	10.44	10.12	10.19
CH 40	5200	10.30							
CH 44	5220	10.36							
CH 48	5240	9.75							
CH 52	5260	**10.74**	10.61	10.64	10.66	10.67	10.71	9.96	9.91
CH 56	5280	10.62							
CH 60	5300	10.30							
CH 64	5320	10.24							
CH 100	5500	9.61	9.66	9.72	9.66	9.60	9.50	9.76	9.71
CH 104	5520	9.48							
CH 108	5540	9.65							
CH 112	5560	9.58							
CH 116	5580	**9.80**							
CH 132	5660	9.28							
CH 136	5680	9.45							
CH 140	5700	9.66							
CH 149	5745	11.17	11.53	11.67	11.68	11.53	11.30	11.76	11.73
CH 153	5765	11.50							
CH 157	5785	**11.79**							
CH 161	5805	11.48							
CH 165	5825	11.23							

13. Bluetooth Exclusions Applied

Mode Band	Average power(dBm)	
	Bluetooth v3.0+EDR	Bluetooth v4.0 LE
2.4GHz Bluetooth	6	0

Note:

1. Per KDB 447498 D01v05r02, the 1-g and 10-g SAR test exclusion thresholds for 100 MHz to 6 GHz at *test separation distances* ≤ 50 mm are determined by:
   [(*max. power of channel, including tune-up tolerance, mW*)/(*min. test separation distance, mm*)] ·[√f(GHz)] ≤ 3.0 for 1-g SAR and ≤ 7.5 for 10-g extremity SAR
   - f(GHz) is the RF channel transmit frequency in GHz
   - Power and distance are rounded to the nearest mW and mm before calculation
   - The result is rounded to one decimal place for comparison

Bluetooth Max Power (dBm)	Separation Distance (mm)	Frequency (GHz)	exclusion thresholds
6	< 5	2.48	1.3

Note: Per KDB 447498 D01v05r02, when the minimum test separation distance is < 5 mm, a distance of 5 mm is applied to determine SAR test exclusion. The test exclusion threshold is 1.3 which is <= 3, SAR testing is not required.

14. Antenna Location

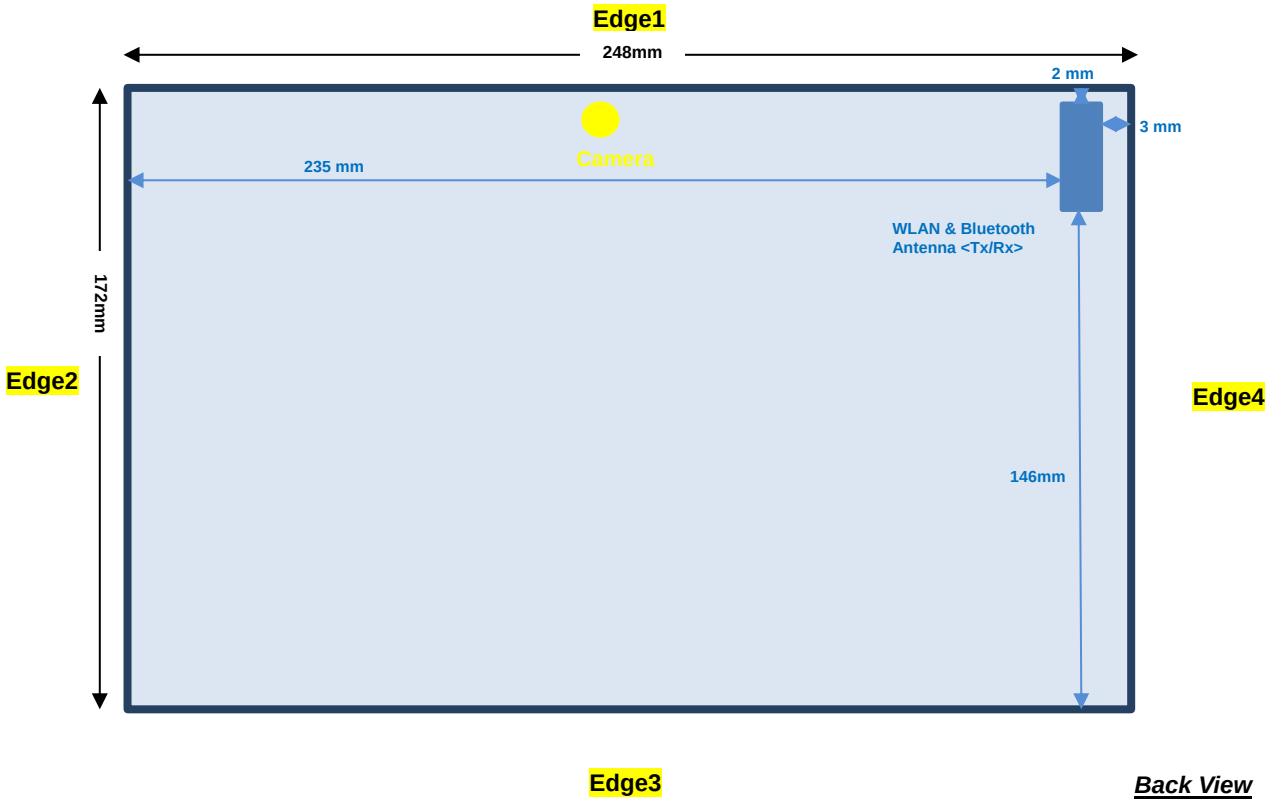

Diagonal: 295 mm

General Note:

1. The below table, when the distance is < 50 mm exclusion threshold is "Ratio", when the distance is > 50 mm exclusion threshold is "mW"
2. Maximum power is the source-based time-average power and represents the maximum RF output power among production units
3. Per KDB 447498 D01v05r02, for larger devices, the test separation distance of adjacent edge configuration is determined by the closest separation between the antenna and the user.
4. Per KDB 447498 D01v05r02, standalone SAR test exclusion threshold is applied; If the test separation distance is < 5mm, 5mm is used to determine SAR exclusion threshold.
5. Per KDB 447498 D01v05r02, the 1-g and 10-g SAR test exclusion thresholds for 100 MHz to 6 GHz at *test separation distances* ≤ 50 mm are determined by:
   [(*max. power of channel, including tune-up tolerance, mW*)/(*min. test separation distance, mm*)] ·[$\sqrt{f(GHz)}$] ≤ 3.0 for 1-g SAR and ≤ 7.5 for 10-g extremity SAR
   - f(GHz) is the RF channel transmit frequency in GHz
   - Power and distance are rounded to the nearest mW and mm before calculation
   - The result is rounded to one decimal place for comparison
6. Per KDB 447498 D01v05r02, at 100 MHz to 6 GHz and for *test separation distances* > 50 mm, the SAR test exclusion threshold is determined according to the following
   a) [Threshold at 50 mm in step 1) + (test separation distance - 50 mm)·(f(MHz)/150)] mW, at 100 MHz to 1500 MHz
   b) [Threshold at 50 mm in step 1) + (test separation distance - 50 mm)·10] mW at > 1500 MHz and ≤ 6 GHz

SAR test exclusion table distance is < 50mm

Exposure Position	Wireless Interface	WLAN2.4GHz	WLAN5.2GHz	WLAN5.3GHz	WLAN5.5GHz	WLAN5.8GHz
	Calculated Frequency (MHz)	2462	5240	5320	5700	5825
	Tune-up Maximum power (dBm)	13.5	11	11	10	12
Bottom Face	Antenna to user (mm)	0				
	SAR exclusion threshold	6.9	4.1	6.3	4.8	7.7
	SAR testing required?	**Yes**	**Yes**	**Yes**	**Yes**	**Yes**
Edge1	Antenna to user (mm)	2				
	SAR exclusion threshold	6.9	4.1	6.3	4.8	7.7
	SAR testing required?	**Yes**	**Yes**	**Yes**	**Yes**	**Yes**
Edge4	Antenna to user (mm)	3				
	SAR exclusion threshold	6.9	4.1	6.3	4.8	7.7
	SAR testing required?	**Yes**	**Yes**	**Yes**	**Yes**	**Yes**

SAR test exclusion table distance is > 50mm

Exposure Position	Wireless Interface	WLAN2.4GHz	WLAN5.2GHz	WLAN5.3GHz	WLAN5.5GHz	WLAN5.8GHz
	Calculated Frequency (MHz)	2462	5240	5320	5700	5825
	Tune-up Maximum power (dBm)	13.5	11	11	10	12
	Tune-up Maximum rated power (mW)	22	13	13	10	16
Edge2	Antenna to user (mm)	235				
	SAR exclusion threshold (mW)	1946	1946	1912	1912	1912
	SAR testing required?	No	No	No	No	No
Edge3	Antenna to user (mm)	146				
	SAR exclusion threshold (mW)	1056	1056	1022	1022	1022
	SAR testing required?	No	No	No	No	No

15. SAR Test Results

General Note:

1. Per KDB 447498 D01v05r02, the reported SAR is the measured SAR value adjusted for maximum tune-up tolerance.
   a. Tune-up scaling Factor = tune-up limit power (mW) / EUT RF power (mW), where tune-up limit is the maximum rated power among all production units.
   b. For SAR testing of WLAN signal with non-100% duty cycle, the measured SAR is scaled-up by the duty cycle scaling factor which is equal to "1/(duty cycle)"
   c. For WLAN: Reported SAR(W/kg)= Measured SAR(W/kg)* Duty Cycle scaling factor * Tune-up scaling factor
2. Per KDB 447498 D01v05r02, for each exposure position, testing of other required channels within the operating mode of a frequency band is not required when the *reported* 1-g or 10-g SAR for the mid-band or highest output power channel is:
   - ≤ 0.8 W/kg or 2.0 W/kg, for 1-g or 10-g respectively, when the transmission band is ≤ 100 MHz
   - ≤ 0.6 W/kg or 1.5 W/kg, for 1-g or 10-g respectively, when the transmission band is between 100 MHz and 200 MHz
   - ≤ 0.4 W/kg or 1.0 W/kg, for 1-g or 10-g respectively, when the transmission band is ≥ 200 MHz
3. Curved region diagram of the device according to the test setup photo (exterior radius dimension), X=2.11mm, Y=1.40mm, Z=1.50mm for WLAN, X>Z, Y<Z, Per KDB 616217 D04v01r01, curved SAR evaluation can be excluded.

15.1 Body SAR

<DTS WLAN SAR>

Plot No.	Band	Mode	Test Position	Gap (cm)	Ch.	Freq. (MHz)	Average Power (dBm)	Tune-Up Limit (dBm)	Tune-up Scaling Factor	Duty Cycle %	Duty Cycle Scaling Factor	Power Drift (dB)	Measured 1g SAR (W/kg)	Reported 1g SAR (W/kg)
	WLAN 2.4GHz	802.11b, 1Mbps	Bottom Face	0	11	2462	12.98	13.50	1.127	100	1.000	0.039	0.860	0.969
	WLAN 2.4GHz	802.11b, 1Mbps	Edge1	0	11	2462	12.98	13.50	1.127	100	1.000	0.03	0.126	0.142
	WLAN 2.4GHz	802.11b, 1Mbps	Edge4	0	11	2462	12.98	13.50	1.127	100	1.000	0.085	0.078	0.088
#01	WLAN 2.4GHz	802.11b, 1Mbps	Bottom Face	0	1	2412	12.74	13.50	1.191	100	1.000	0.07	0.958	**1.141**
	WLAN 2.4GHz	802.11b, 1Mbps	Bottom Face	0	6	2437	12.92	13.50	1.142	100	1.000	0.052	0.867	0.990
	WLAN 2.4GHz	802.11n HT20, MCS0	Bottom Face	0	11	2462	12.51	13.00	1.119	89.04	1.123	0.12	0.668	0.840
	WLAN 2.4GHz	802.11n HT20, MCS0	Bottom Face	0	1	2412	12.06	13.00	1.242	89.04	1.123	0.07	0.685	0.955
	WLAN 2.4GHz	802.11n HT20, MCS0	Bottom Face	0	6	2437	12.31	13.00	1.172	89.04	1.123	0.05	0.693	0.912
	WLAN 2.4GHz	802.11n HT40, MCS0	Bottom Face	0	9	2452	11.05	11.50	1.109	78.85	1.268	-0.03	0.427	0.601

<UNII WLAN SAR>

Plot No.	Band	Mode	Test Position	Gap (cm)	Ch.	Freq. (MHz)	Average Power (dBm)	Tune-Up Limit (dBm)	Tune-up Scaling Factor	Duty Cycle %	Duty Cycle Scaling Factor	Power Drift (dB)	Measured 1g SAR (W/kg)	Reported 1g SAR (W/kg)
#02	WLAN 5.2GHz	802.11a,6Mbps	Bottom Face	0	36	5180	10.54	11.00	1.112	88.78	1.126	0.07	1.110	**1.390**
	WLAN 5.2GHz	802.11a,6Mbps	Edge1	0	36	5180	10.54	11.00	1.112	88.78	1.126	-0.026	0.468	0.586
	WLAN 5.2GHz	802.11a,6Mbps	Edge4	0	36	5180	10.54	11.00	1.112	88.78	1.126	-0.17	0.206	0.258
	WLAN 5.2GHz	802.11a,6Mbps	Bottom Face	0	44	5220	10.36	11.00	1.159	88.78	1.126	-0.063	0.988	1.289
	WLAN 5.3GHz	802.11a,6Mbps	Bottom Face	0	52	5260	10.74	11.00	1.062	88.78	1.126	0.1	1.190	1.423
	WLAN 5.3GHz	802.11a,6Mbps	Edge1	0	52	5260	10.74	11.00	1.062	88.78	1.126	0.062	0.309	0.369
	WLAN 5.3GHz	802.11a,6Mbps	Edge4	0	52	5260	10.74	11.00	1.062	88.78	1.126	0.035	0.244	0.292
#03	WLAN 5.3GHz	802.11a,6Mbps	Bottom Face	0	60	5300	10.30	10.50	1.047	88.78	1.126	0.12	1.250	**1.474**
	WLAN 5.5GHz	802.11a,6Mbps	Bottom Face	0	116	5580	9.80	10.00	1.047	88.78	1.126	0.05	0.876	1.033
	WLAN 5.5GHz	802.11a,6Mbps	Edge1	0	116	5580	9.80	10.00	1.047	88.78	1.126	0.07	0.304	0.358
	WLAN 5.5GHz	802.11a,6Mbps	Edge4	0	116	5580	9.80	10.00	1.047	88.78	1.126	0.08	0.185	0.218
#04	WLAN 5.5GHz	802.11a,6Mbps	Bottom Face	0	108	5540	9.65	10.00	1.084	88.78	1.126	-0.01	0.925	**1.129**
	WLAN 5.5GHz	802.11a,6Mbps	Bottom Face	0	140	5700	9.66	10.00	1.081	88.78	1.126	0.12	0.624	0.760
#05	WLAN 5.8GHz	802.11a,6Mbps	Bottom Face	0	157	5785	11.79	12.00	1.050	88.78	1.126	0.06	0.972	**1.149**
	WLAN 5.8GHz	802.11a,6Mbps	Edge1	0	157	5785	11.79	12.00	1.050	88.78	1.126	-0.17	0.310	0.366
	WLAN 5.8GHz	802.11a,6Mbps	Edge4	0	157	5785	11.79	12.00	1.050	88.78	1.126	0.08	0.139	0.164
	WLAN 5.8GHz	802.11a,6Mbps	Bottom Face	0	153	5765	11.50	12.00	1.122	88.78	1.126	0.03	0.804	1.016
	WLAN 5.8GHz	802.11a,6Mbps	Bottom Face	0	161	5805	11.48	12.00	1.127	88.78	1.126	0.038	0.784	0.995

15.2 Repeated SAR Measurement

No.	Band	Mode	Test Position	Gap (cm)	Ch.	Freq. (MHz)	Average Power (dBm)	Tune-Up Limit (dBm)	Tune-up Scaling Factor	Duty Cycle %	Duty Cycle Scaling Factor	Power Drift (dB)	Measured 1g SAR (W/kg)	Ratio	Reported 1g SAR (W/kg)
1st	WLAN 2.4GHz	802.11b, 1Mbps	Bottom Face	0	1	2412	12.74	13.50	1.191	100	1.000	0.07	0.958	1	1.141
2nd	WLAN 2.4GHz	802.11b, 1Mbps	Bottom Face	0	1	2412	12.74	13.50	1.191	100	1.000	0.12	0.949	1.009	1.130
1st	WLAN 5.2GHz	802.11a,6Mbps	Bottom Face	0	36	5180	10.54	11.00	1.112	88.78	1.126	0.07	1.110	1	1.390
2nd	WLAN 5.2GHz	802.11a,6Mbps	Bottom Face	0	36	5180	10.54	11.00	1.112	88.78	1.126	-0.01	1.060	1.047	1.327
1st	WLAN 5.3GHz	802.11a,6Mbps	Bottom Face	0	60	5300	10.30	10.50	1.047	88.78	1.126	0.12	1.250	1	1.474
2nd	WLAN 5.3GHz	802.11a,6Mbps	Bottom Face	0	60	5300	10.30	10.50	1.047	88.78	1.126	-0.07	1.120	1.116	1.321
1st	WLAN 5.5GHz	802.11a,6Mbps	Bottom Face	0	108	5540	9.65	10.00	1.084	88.78	1.126	-0.01	0.925	1	1.129
2nd	WLAN 5.5GHz	802.11a,6Mbps	Bottom Face	0	108	5540	9.65	10.00	1.084	88.78	1.126	0.08	0.895	1.034	1.092
1st	WLAN 5.8GHz	802.11a,6Mbps	Bottom Face	0	157	5785	11.79	12.00	1.050	88.78	1.126	0.06	0.972	1	1.149
2nd	WLAN 5.8GHz	802.11a,6Mbps	Bottom Face	0	157	5785	11.79	12.00	1.050	88.78	1.126	0.15	0.966	1.006	1.142

General Note:

1. Per KDB 865664 D01v01r03, for each frequency band, repeated SAR measurement is required only when the measured SAR is ≥0.8W/kg
2. Per KDB 865664 D01v01r03, if the ratio among the repeated measurement is ≤ 1.2 and the measured SAR <1.45W/kg, only one repeated measurement is required.
3. The ratio is the difference in percentage between original and repeated *measured SAR*.
4. All measurement SAR result is scaled-up to account for tune-up tolerance and is compliant.

16. Simultaneous Transmission Analysis

No.	Simultaneous Transmission Configurations
1.	None

General Note:

1. WLAN2.4GHz and Bluetooth share the same antenna, and cannot transmit simultaneously.
2. EUT will choose either WLAN 2.4GHz or WLAN 5GHz according to the network signal condition; therefore, 2.4GHz WLAN and 5GHz WLAN will not operate simultaneously at any moment.

Test Engineer：Fulu Hu

17. Uncertainty Assessment

The component of uncertainly may generally be categorized according to the methods used to evaluate them. The evaluation of uncertainly by the statistical analysis of a series of observations is termed a Type An evaluation of uncertainty. The evaluation of uncertainty by means other than the statistical analysis of a series of observation is termed a Type B evaluation of uncertainty. Each component of uncertainty, however evaluated, is represented by an estimated standard deviation, termed standard uncertainty, which is determined by the positive square root of the estimated variance.

A Type A evaluation of standard uncertainty may be based on any valid statistical method for treating data. This includes calculating the standard deviation of the mean of a series of independent observations; using the method of least squares to fit a curve to the data in order to estimate the parameter of the curve and their standard deviations; or carrying out an analysis of variance in order to identify and quantify random effects in certain kinds of measurement.

A type B evaluation of standard uncertainty is typically based on scientific judgment using all of the relevant information available. These may include previous measurement data, experience, and knowledge of the behavior and properties of relevant materials and instruments, manufacture's specification, data provided in calibration reports and uncertainties assigned to reference data taken from handbooks. Broadly speaking, the uncertainty is either obtained from an outdoor source or obtained from an assumed distribution, such as the normal distribution, rectangular or triangular distributions indicated in table below.

Uncertainty Distributions	Normal	Rectangular	Triangular	U-Shape
Multi-plying Factor[(a)]	1/k[(b)]	$1/\sqrt{3}$	$1/\sqrt{6}$	$1/\sqrt{2}$

(a) standard uncertainty is determined as the product of the multiplying factor and the estimated range of variations in the measured quantity

(b) κ is the coverage factor

Table 17.1. Standard Uncertainty for Assumed Distribution

The combined standard uncertainty of the measurement result represents the estimated standard deviation of the result. It is obtained by combining the individual standard uncertainties of both Type A and Type B evaluation using the usual "root-sum-squares" (RSS) methods of combining standard deviations by taking the positive square root of the estimated variances.

Expanded uncertainty is a measure of uncertainty that defines an interval about the measurement result within which the measured value is confidently believed to lie. It is obtained by multiplying the combined standard uncertainty by a coverage factor. Typically, the coverage factor ranges from 2 to 3. Using a coverage factor allows the true value of a measured quantity to be specified with a defined probability within the specified uncertainty range. For purpose of this document, a coverage factor two is used, which corresponds to confidence interval of about 95 %. The DASY uncertainty Budget is shown in the following tables.

Error Description	Uncertainty Value (±%)	Probability Distribution	Divisor	Ci (1g)	Ci (10g)	Standard Uncertainty (1g)	Standard Uncertainty (10g)
Measurement System							
Probe Calibration	6.0	Normal	1	1	1	± 6.0 %	± 6.0 %
Axial Isotropy	4.7	Rectangular	√3	0.7	0.7	± 1.9 %	± 1.9 %
Hemispherical Isotropy	9.6	Rectangular	√3	0.7	0.7	± 3.9 %	± 3.9 %
Boundary Effects	1.0	Rectangular	√3	1	1	± 0.6 %	± 0.6 %
Linearity	4.7	Rectangular	√3	1	1	± 2.7 %	± 2.7 %
System Detection Limits	1.0	Rectangular	√3	1	1	± 0.6 %	± 0.6 %
Readout Electronics	0.3	Normal	1	1	1	± 0.3 %	± 0.3 %
Response Time	0.8	Rectangular	√3	1	1	± 0.5 %	± 0.5 %
Integration Time	2.6	Rectangular	√3	1	1	± 1.5 %	± 1.5 %
RF Ambient Noise	3.0	Rectangular	√3	1	1	± 1.7 %	± 1.7 %
RF Ambient Reflections	3.0	Rectangular	√3	1	1	± 1.7 %	± 1.7 %
Probe Positioner	0.4	Rectangular	√3	1	1	± 0.2 %	± 0.2 %
Probe Positioning	2.9	Rectangular	√3	1	1	± 1.7 %	± 1.7 %
Max. SAR Eval.	1.0	Rectangular	√3	1	1	± 0.6 %	± 0.6 %
Test Sample Related							
Device Positioning	2.9	Normal	1	1	1	± 2.9 %	± 2.9 %
Device Holder	3.6	Normal	1	1	1	± 3.6 %	± 3.6 %
Power Drift	5.0	Rectangular	√3	1	1	± 2.9 %	± 2.9 %
Phantom and Setup							
Phantom Uncertainty	4.0	Rectangular	√3	1	1	± 2.3 %	± 2.3 %
Liquid Conductivity (Target)	5.0	Rectangular	√3	0.64	0.43	± 1.8 %	± 1.2 %
Liquid Conductivity (Meas.)	2.5	Normal	1	0.64	0.43	± 1.6 %	± 1.1 %
Liquid Permittivity (Target)	5.0	Rectangular	√3	0.6	0.49	± 1.7 %	± 1.4 %
Liquid Permittivity (Meas.)	2.5	Normal	1	0.6	0.49	± 1.5 %	± 1.2 %
Combined Standard Uncertainty						± 11.0 %	± 10.8 %
Coverage Factor for 95 %						K=2	
Expanded Uncertainty						**± 22.0 %**	**± 21.5 %**

Table 17.2. Uncertainty Budget for frequency range 300 MHz to 3 GHz

Error Description	Uncertainty Value (±%)	Probability Distribution	Divisor	Ci (1g)	Ci (10g)	Standard Uncertainty (1g)	Standard Uncertainty (10g)
Measurement System							
Probe Calibration	6.55	Normal	1	1	1	± 6.55 %	± 6.55 %
Axial Isotropy	4.7	Rectangular	√3	0.7	0.7	± 1.9 %	± 1.9 %
Hemispherical Isotropy	9.6	Rectangular	√3	0.7	0.7	± 3.9 %	± 3.9 %
Boundary Effects	2.0	Rectangular	√3	1	1	± 1.2 %	± 1.2 %
Linearity	4.7	Rectangular	√3	1	1	± 2.7 %	± 2.7 %
System Detection Limits	1.0	Rectangular	√3	1	1	± 0.6 %	± 0.6 %
Readout Electronics	0.3	Normal	1	1	1	± 0.3 %	± 0.3 %
Response Time	0.8	Rectangular	√3	1	1	± 0.5 %	± 0.5 %
Integration Time	2.6	Rectangular	√3	1	1	± 1.5 %	± 1.5 %
RF Ambient Noise	3.0	Rectangular	√3	1	1	± 1.7 %	± 1.7 %
RF Ambient Reflections	3.0	Rectangular	√3	1	1	± 1.7 %	± 1.7 %
Probe Positioner	0.8	Rectangular	√3	1	1	± 0.5 %	± 0.5 %
Probe Positioning	9.9	Rectangular	√3	1	1	± 5.7 %	± 5.7 %
Max. SAR Eval.	4.0	Rectangular	√3	1	1	± 2.3 %	± 2.3 %
Test Sample Related							
Device Positioning	2.9	Normal	1	1	1	± 2.9 %	± 2.9 %
Device Holder	3.6	Normal	1	1	1	± 3.6 %	± 3.6 %
Power Drift	5.0	Rectangular	√3	1	1	± 2.9 %	± 2.9 %
Phantom and Setup							
Phantom Uncertainty	4.0	Rectangular	√3	1	1	± 2.3 %	± 2.3 %
Liquid Conductivity (Target)	5.0	Rectangular	√3	0.64	0.43	± 1.8 %	± 1.2 %
Liquid Conductivity (Meas.)	2.5	Normal	1	0.64	0.43	± 1.6 %	± 1.1 %
Liquid Permittivity (Target)	5.0	Rectangular	√3	0.6	0.49	± 1.7 %	± 1.4 %
Liquid Permittivity (Meas.)	2.5	Normal	1	0.6	0.49	± 1.5 %	± 1.2 %
Combined Standard Uncertainty						± 12.8 %	± 12.6 %
Coverage Factor for 95 %						K=2	
Expanded Uncertainty						**± 25.6 %**	**± 25.2 %**

Table 17.3. Uncertainty Budget for frequency range 3 GHz to 6 GHz

18. References

[1] FCC 47 CFR Part 2 “Frequency Allocations and Radio Treaty Matters; General Rules and Regulations”

[2] ANSI/IEEE Std. C95.1-1992, “IEEE Standard for Safety Levels with Respect to Human Exposure to Radio Frequency Electromagnetic Fields, 3 kHz to 300 GHz”, September 1992

[3] IEEE Std. 1528-2003, “Recommended Practice for Determining the Peak Spatial-Average Specific Absorption Rate (SAR) in the Human Head from Wireless Communications Devices: Measurement Techniques”, December 2003

[4] SPEAG DASY System Handbook

[5] FCC KDB 248227 D01 v01r02, “SAR Measurement Procedures for 802.11 a/b/g Transmitters”, May 2007

[6] FCC KDB 447498 D01 v05r02, “Mobile and Portable Device RF Exposure Procedures and Equipment Authorization Policies”, Feb 2014

[7] FCC KDB 616217 D04 v01r01, “SAR Evaluation Considerations for Laptop, Notebook, Netbook and Tablet Computers”, May 2013

[8] FCC KDB 865664 D01 v01r03, "SAR Measurement Requirements for 100 MHz to 6 GHz", Feb 2014.

[9] FCC KDB 865664 D02 v01r01, “RF Exposure Compliance Reporting and Documentation Considerations” May 2013.

Appendix A. Plots of System Performance Check

The plots are shown as follows.

Test Laboratory: Sporton International Inc. SAR/HAC Testing Lab Date: 2015.01.14

System Check_Body_2450MHz_150114

DUT: D2450V2 - SN:736

Communication System: CW; Frequency: 2450 MHz;Duty Cycle: 1:1
Medium: MSL_2450_150114 Medium parameters used: f = 2450 MHz; σ = 1.939 mho/m; ε_r = 51.385; ρ = 1000 kg/m^3
Ambient Temperature：23.4 ℃； Liquid Temperature：22.8 ℃

DASY5 Configuration:
- Probe: EX3DV4 - SN3857; ConvF(7.14, 7.14, 7.14); Calibrated: 2014.05.23
- Sensor-Surface: 2mm (Mechanical Surface Detection)
- Electronics: DAE4 Sn1210; Calibrated: 2014.05.19
- Phantom: SAM3; Type: SAM; Serial: TP-1079
- Measurement SW: DASY52, Version 52.8 (8); SEMCAD X Version 14.4.5 (3634)

Pin=250mW/Area Scan (71x71x1): Measurement grid: dx=12mm, dy=12mm
Maximum value of SAR (interpolated) = 19.017 mW/g

Pin=250mW/Zoom Scan (7x7x7)/Cube 0: Measurement grid: dx=5mm, dy=5mm, dz=5mm
Reference Value = 84.881 V/m; Power Drift = -0.19 dB
Peak SAR (extrapolated) = 25.168 W/kg
SAR(1 g) = 12.4 mW/g; SAR(10 g) = 5.8 mW/g
Maximum value of SAR (measured) = 18.837 mW/g

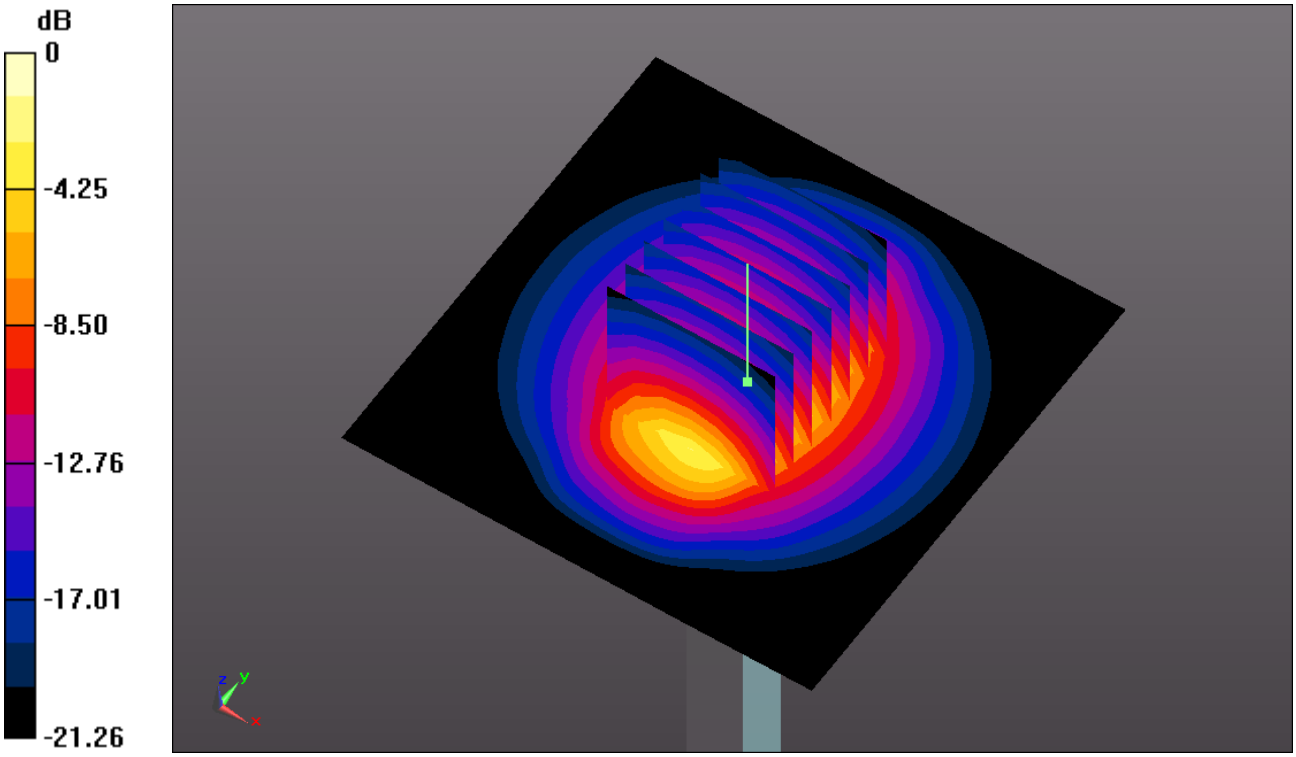

0 dB = 18.840mW/g

Test Laboratory: Sporton International Inc. SAR/HAC Testing Lab Date: 2015.01.15

System Check_Body_5200MHz_150115

DUT: D5GHzV2-SN:1128

Communication System: CW; Frequency: 5200 MHz;Duty Cycle: 1:1
Medium: MSL_5000_150115 Medium parameters used: f = 5200 MHz; σ = 5.162 mho/m; ε_r = 48.492; ρ = 1000 kg/m^3
Ambient Temperature：23.4 ℃； Liquid Temperature：22.7 ℃

DASY5 Configuration:
- Probe: EX3DV4 - SN3857; ConvF(4.54, 4.54, 4.54); Calibrated: 2014.05.23
- Sensor-Surface: 1.4mm (Mechanical Surface Detection)
- Electronics: DAE4 Sn1210; Calibrated: 2014.05.19
- Phantom: SAM3; Type: SAM; Serial: TP-1079
- Measurement SW: DASY52, Version 52.8 (8); SEMCAD X Version 14.4.5 (3634)

Pin=100mW/Area Scan (71x71x1): Measurement grid: dx=10mm, dy=10mm
Maximum value of SAR (interpolated) = 16.722 mW/g

Pin=100mW/Zoom Scan (8x8x7)/Cube 0: Measurement grid: dx=4mm, dy=4mm, dz=1.4mm
Reference Value = 40.640 V/m; Power Drift = -0.12 dB
Peak SAR (extrapolated) = 29.480 W/kg
SAR(1 g) = 7.12 mW/g; SAR(10 g) = 2.01 mW/g
Maximum value of SAR (measured) = 17.032 mW/g

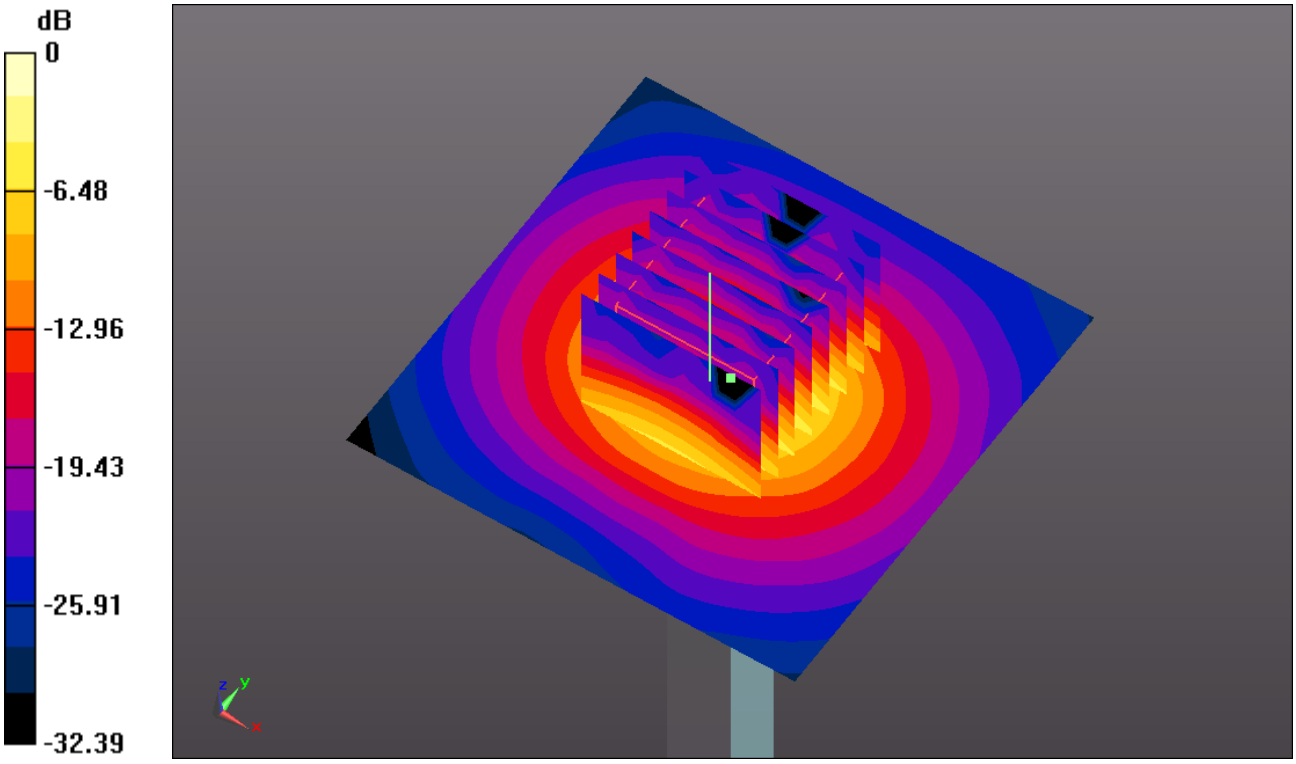

0 dB = 16.720mW/g

Test Laboratory: Sporton International Inc. SAR/HAC Testing Lab Date: 2015.01.15

System Check_Body_5300MHz_150115

DUT: D5GHzV2-SN:1128

Communication System: CW; Frequency: 5300 MHz;Duty Cycle: 1:1
Medium: MSL_5000_150115 Medium parameters used: f = 5300 MHz; σ = 5.301 mho/m; ε_r = 48.29; ρ = 1000 kg/m^3
Ambient Temperature：23.4 ℃； Liquid Temperature：22.7 ℃

DASY5 Configuration:
- Probe: EX3DV4 - SN3857; ConvF(4.37, 4.37, 4.37); Calibrated: 2014.05.23
- Sensor-Surface: 1.4mm (Mechanical Surface Detection)
- Electronics: DAE4 Sn1210; Calibrated: 2014.05.19
- Phantom: SAM3; Type: SAM; Serial: TP-1079
- Measurement SW: DASY52, Version 52.8 (8); SEMCAD X Version 14.4.5 (3634)

Pin=100mW/Area Scan (71x71x1): Measurement grid: dx=10mm, dy=10mm
Maximum value of SAR (interpolated) = 17.355 mW/g

Pin=100mW/Zoom Scan (8x8x7)/Cube 0: Measurement grid: dx=4mm, dy=4mm, dz=1.4mm
Reference Value = 39.635 V/m; Power Drift = -0.11 dB
Peak SAR (extrapolated) = 29.889 W/kg
SAR(1 g) = 7.54 mW/g; SAR(10 g) = 1.96 mW/g
Maximum value of SAR (measured) = 16.851 mW/g

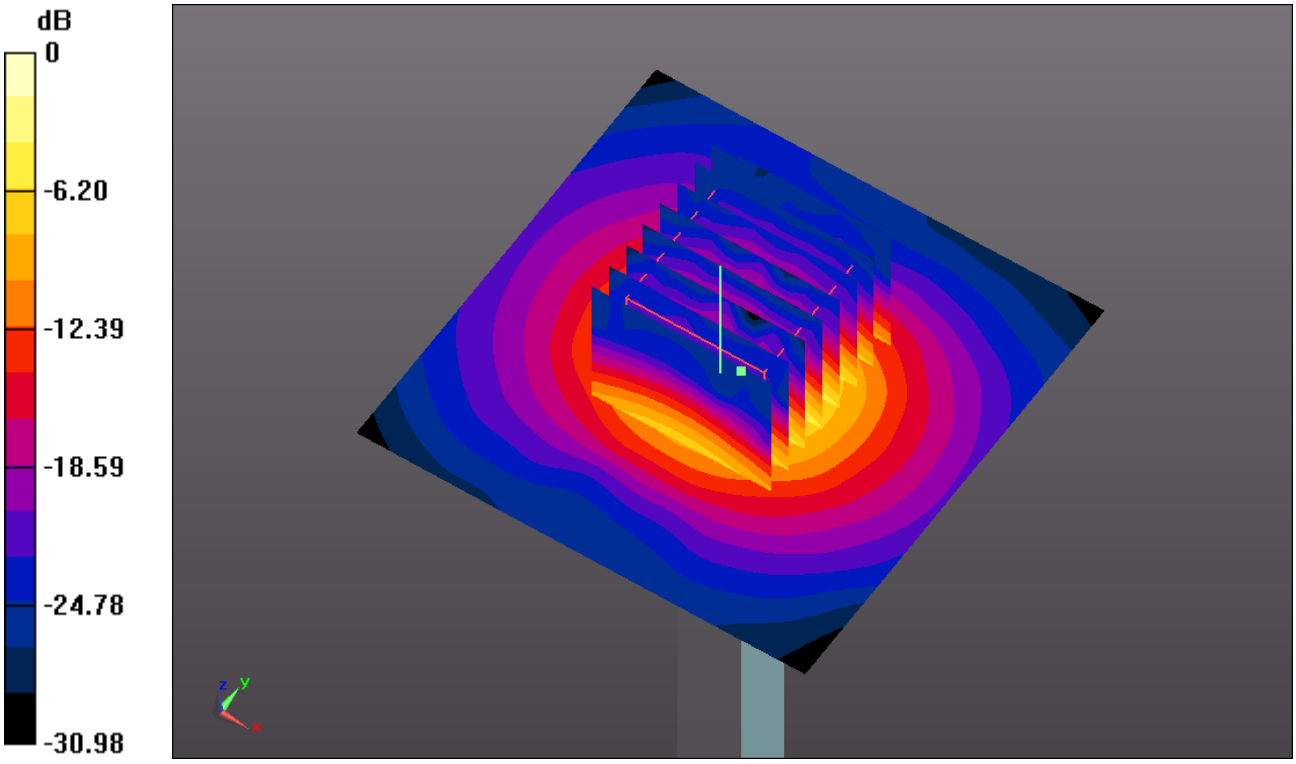

0 dB = 17.360mW/g

Test Laboratory: Sporton International Inc. SAR/HAC Testing Lab Date: 2015.01.15

System Check_Body_5600MHz_150115

DUT: D5GHzV2-SN:1128

Communication System: CW; Frequency: 5600 MHz;Duty Cycle: 1:1
Medium: MSL_5000_150115 Medium parameters used: f = 5600 MHz; σ = 5.716 mho/m; ε_r = 47.645; ρ = 1000 kg/m^3
Ambient Temperature：23.4 ℃； Liquid Temperature：22.7 ℃

DASY5 Configuration:
- Probe: EX3DV4 - SN3857; ConvF(3.98, 3.98, 3.98); Calibrated: 2014.05.23
- Sensor-Surface: 1.4mm (Mechanical Surface Detection)
- Electronics: DAE4 Sn1210; Calibrated: 2014.05.19
- Phantom: SAM3; Type: SAM; Serial: TP-1079
- Measurement SW: DASY52, Version 52.8 (8); SEMCAD X Version 14.4.5 (3634)

Pin=100mW/Area Scan (71x71x1): Measurement grid: dx=10mm, dy=10mm
Maximum value of SAR (interpolated) = 19.165 mW/g

Pin=100mW/Zoom Scan (8x8x7)/Cube 0: Measurement grid: dx=4mm, dy=4mm, dz=1.4mm
Reference Value = 39.026 V/m; Power Drift = -0.10 dB
Peak SAR (extrapolated) = 35.467 W/kg
SAR(1 g) = 7.65 mW/g; SAR(10 g) = 2.13 mW/g
Maximum value of SAR (measured) = 19.085 mW/g

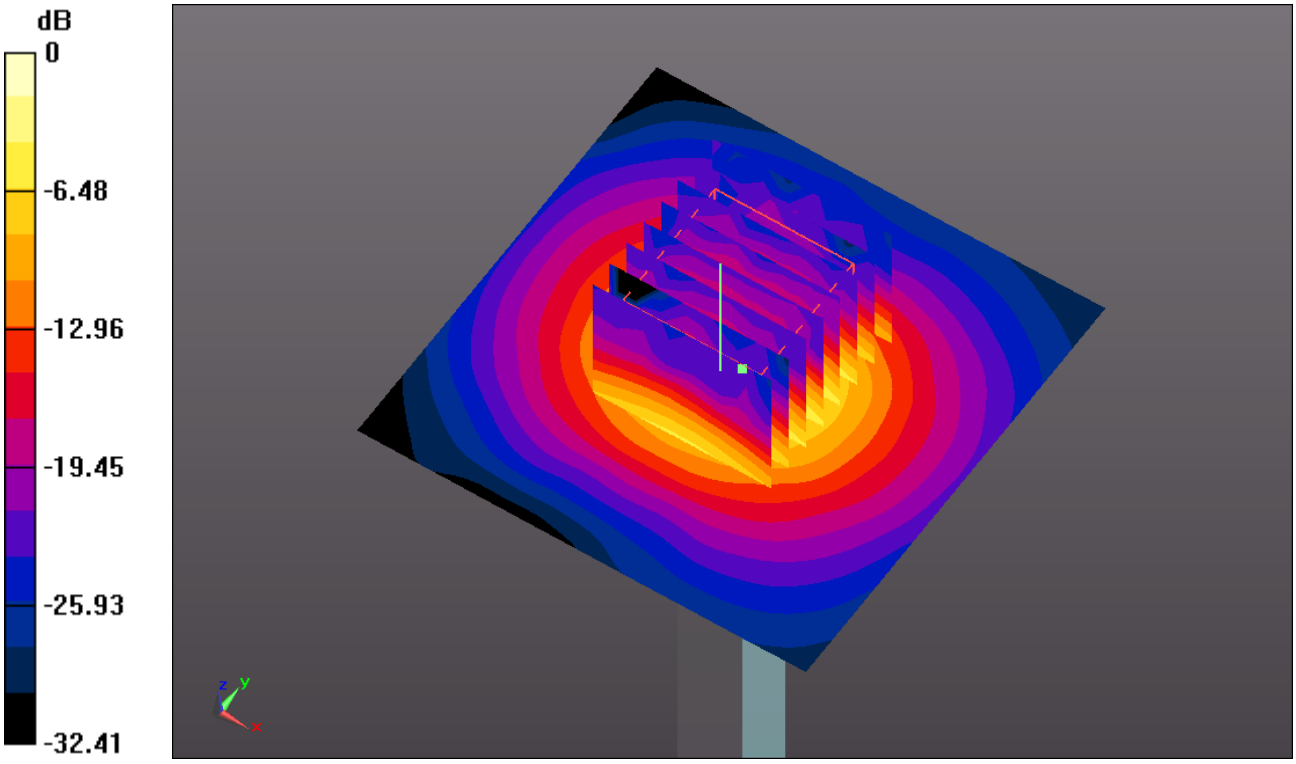

0 dB = 19.160mW/g

Test Laboratory: Sporton International Inc. SAR/HAC Testing Lab Date: 2015.01.15

System Check_Body_5800MHz_150115

DUT: D5GHzV2-SN:1128

Communication System: CW; Frequency: 5800 MHz;Duty Cycle: 1:1
Medium: MSL_5000_150115 Medium parameters used: f = 5800 MHz; σ = 5.976 mho/m; ε_r = 47.158; ρ = 1000 kg/m^3
Ambient Temperature：23.4 ℃； Liquid Temperature：22.7 ℃

DASY5 Configuration:
- Probe: EX3DV4 - SN3857; ConvF(4.21, 4.21, 4.21); Calibrated: 2014.05.23
- Sensor-Surface: 1.4mm (Mechanical Surface Detection)
- Electronics: DAE4 Sn1210; Calibrated: 2014.05.19
- Phantom: SAM3; Type: SAM; Serial: TP-1079
- Measurement SW: DASY52, Version 52.8 (8); SEMCAD X Version 14.4.5 (3634)

Pin=100mW/Area Scan (71x71x1): Measurement grid: dx=10mm, dy=10mm
Maximum value of SAR (interpolated) = 17.485 mW/g

Pin=100mW/Zoom Scan (8x8x7)/Cube 0: Measurement grid: dx=4mm, dy=4mm, dz=1.4mm
Reference Value = 37.117 V/m; Power Drift = -0.13 dB
Peak SAR (extrapolated) = 32.403 W/kg
SAR(1 g) = 7.13 mW/g; SAR(10 g) = 1.99 mW/g
Maximum value of SAR (measured) = 17.418 mW/g

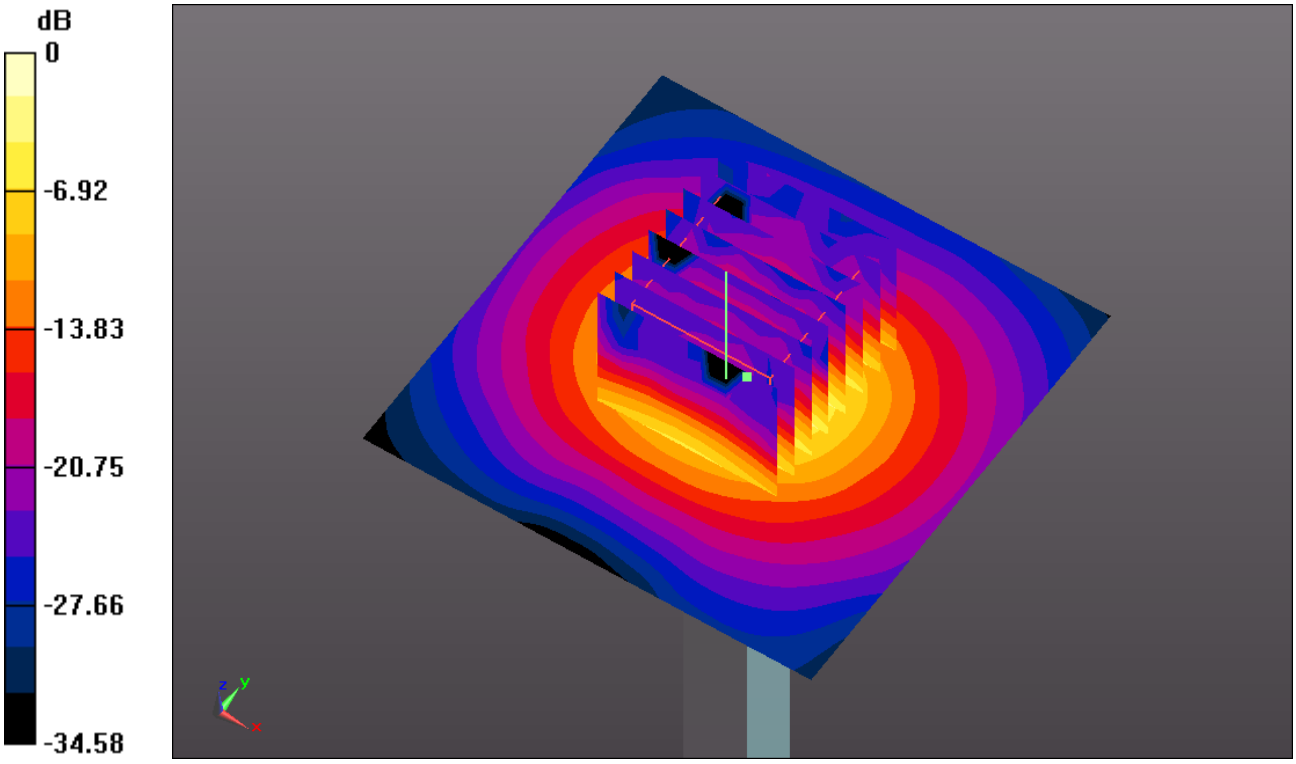

0 dB = 17.480mW/g

Appendix B. Plots of High SAR Measurement

The plots are shown as follows.

#01_WLAN 2.4GHz_802.11b_1M_Bottom Face 0cm_Ch1

Communication System: WIFI (0); Frequency: 2412 MHz;Duty Cycle: 1:1
Medium: MSL_2450_150114 Medium parameters used: f = 2412 MHz; σ = 1.885 mho/m; ε_r = 51.554; ρ = 1000 kg/m^3
Ambient Temperature：23.4 ℃； Liquid Temperature：22.8 ℃

DASY5 Configuration:
- Probe: EX3DV4 - SN3857; ConvF(7.14, 7.14, 7.14); Calibrated: 2014.05.23
- Sensor-Surface: 2mm (Mechanical Surface Detection)
- Electronics: DAE4 Sn1210; Calibrated: 2014.05.19
- Phantom: SAM3; Type: SAM; Serial: TP-1079
- Measurement SW: DASY52, Version 52.8 (8); SEMCAD X Version 14.4.5 (3634)

Ch1/Area Scan (71x101x1): Measurement grid: dx=12mm, dy=12mm
Maximum value of SAR (interpolated) = 1.845 mW/g

Ch1/Zoom Scan (7x7x7)/Cube 0: Measurement grid: dx=5mm, dy=5mm, dz=5mm
Reference Value = 0 V/m; Power Drift = 0.07 dB
Peak SAR (extrapolated) = 2.896 W/kg
SAR(1 g) = 0.958 mW/g; SAR(10 g) = 0.351 mW/g
Maximum value of SAR (measured) = 1.638 mW/g

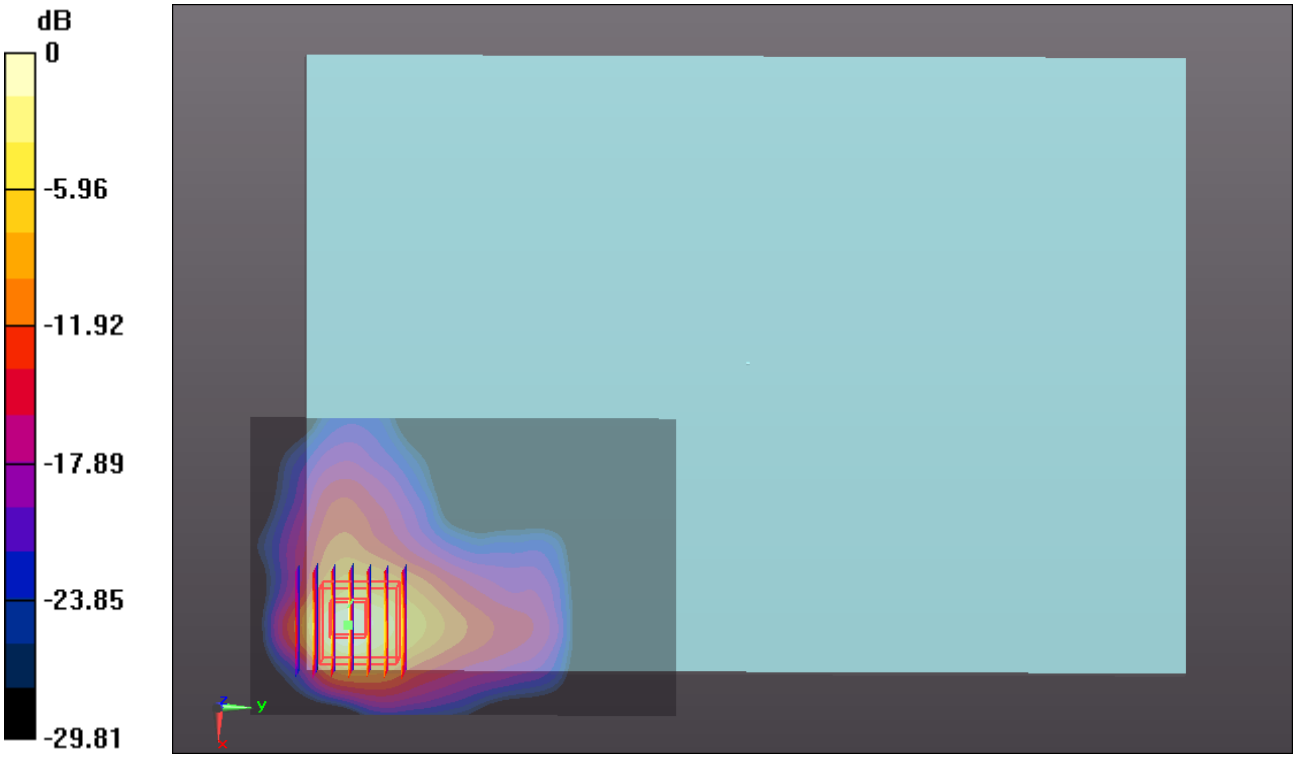

0 dB = 1.640mW/g

#02_WLAN 5.2GHz_802.11a_6M_Bottom Face 0cm_Ch36

Communication System: WIFI (0); Frequency: 5180 MHz;Duty Cycle: 1:1.126
Medium: MSL_5000_150115 Medium parameters used: f = 5180 MHz; σ = 5.134 mho/m; ε_r = 48.523; ρ = 1000 kg/m^3
Ambient Temperature：23.4 ℃； Liquid Temperature：22.7 ℃

DASY5 Configuration:
- Probe: EX3DV4 - SN3857; ConvF(4.54, 4.54, 4.54); Calibrated: 2014.05.23
- Sensor-Surface: 1.4mm (Mechanical Surface Detection)
- Electronics: DAE4 Sn1210; Calibrated: 2014.05.19
- Phantom: SAM3; Type: SAM; Serial: TP-1079
- Measurement SW: DASY52, Version 52.8 (8); SEMCAD X Version 14.4.5 (3634)

Ch36/Area Scan (121x81x1): Measurement grid: dx=10mm, dy=10mm
Maximum value of SAR (interpolated) = 2.187 mW/g

Ch36/Zoom Scan (8x8x7)/Cube 0: Measurement grid: dx=4mm, dy=4mm, dz=1.4mm
Reference Value = 0 V/m; Power Drift = 0.07 dB
Peak SAR (extrapolated) = 6.089 W/kg
SAR(1 g) = 1.110 mW/g; SAR(10 g) = 0.256 mW/g
Maximum value of SAR (measured) = 3.687 mW/g

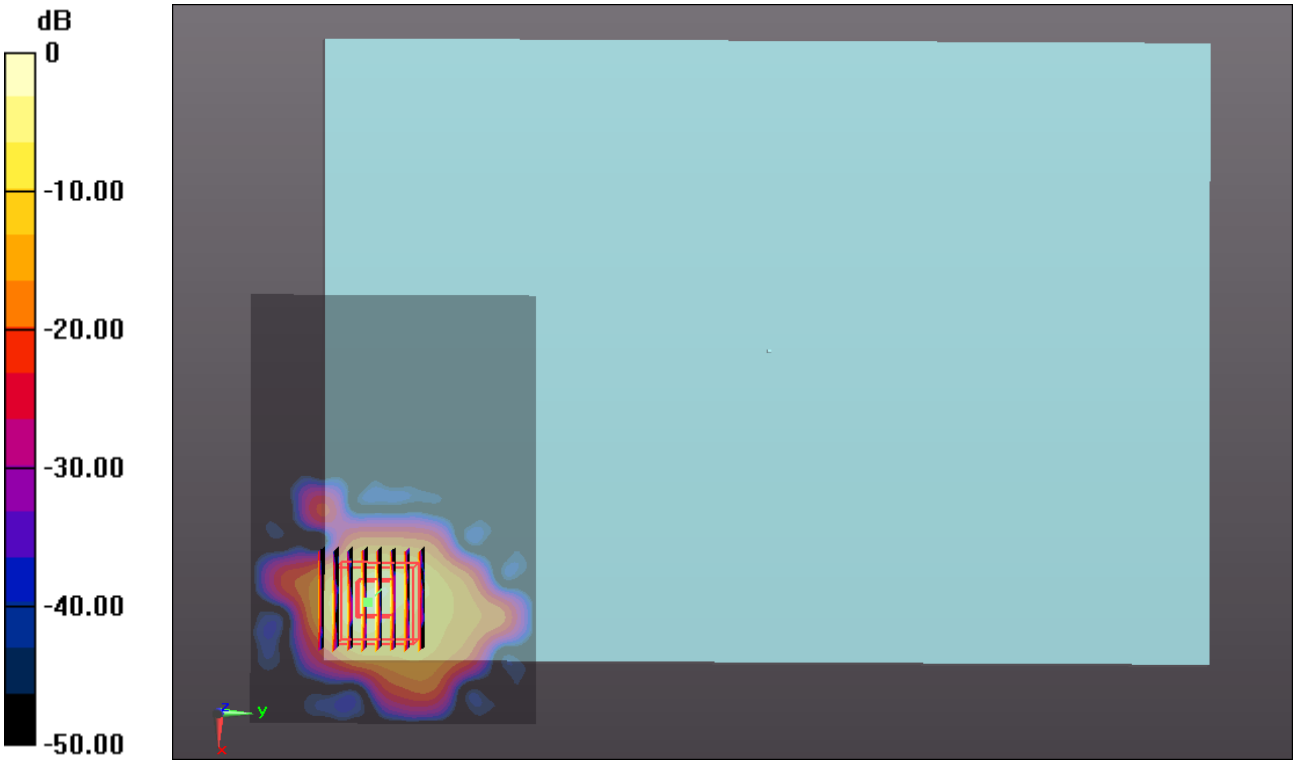

0 dB = 3.690mW/g

#03_WLAN 5.3GHz_802.11a_6M_Bottom Face 0cm_Ch60

Communication System: WIFI (0); Frequency: 5300 MHz;Duty Cycle: 1:1.126
Medium: MSL_5000_150115 Medium parameters used: f = 5300 MHz; σ = 5.301 mho/m; ε_r = 48.29; ρ = 1000 kg/m^3
Ambient Temperature：23.4 ℃； Liquid Temperature：22.7 ℃

DASY5 Configuration:
- Probe: EX3DV4 - SN3857; ConvF(4.37, 4.37, 4.37); Calibrated: 2014.05.23
- Sensor-Surface: 1.4mm (Mechanical Surface Detection)
- Electronics: DAE4 Sn1210; Calibrated: 2014.05.19
- Phantom: SAM3; Type: SAM; Serial: TP-1079
- Measurement SW: DASY52, Version 52.8 (8); SEMCAD X Version 14.4.5 (3634)

Ch60/Area Scan (81x101x1): Measurement grid: dx=10mm, dy=10mm
Maximum value of SAR (interpolated) = 2.995 mW/g

Ch60/Zoom Scan (8x8x7)/Cube 0: Measurement grid: dx=4mm, dy=4mm, dz=1.4mm
Reference Value = 0 V/m; Power Drift = 0.12 dB
Peak SAR (extrapolated) = 7.260 W/kg
SAR(1 g) = 1.250 mW/g; SAR(10 g) = 0.281 mW/g
Maximum value of SAR (measured) = 3.988 mW/g

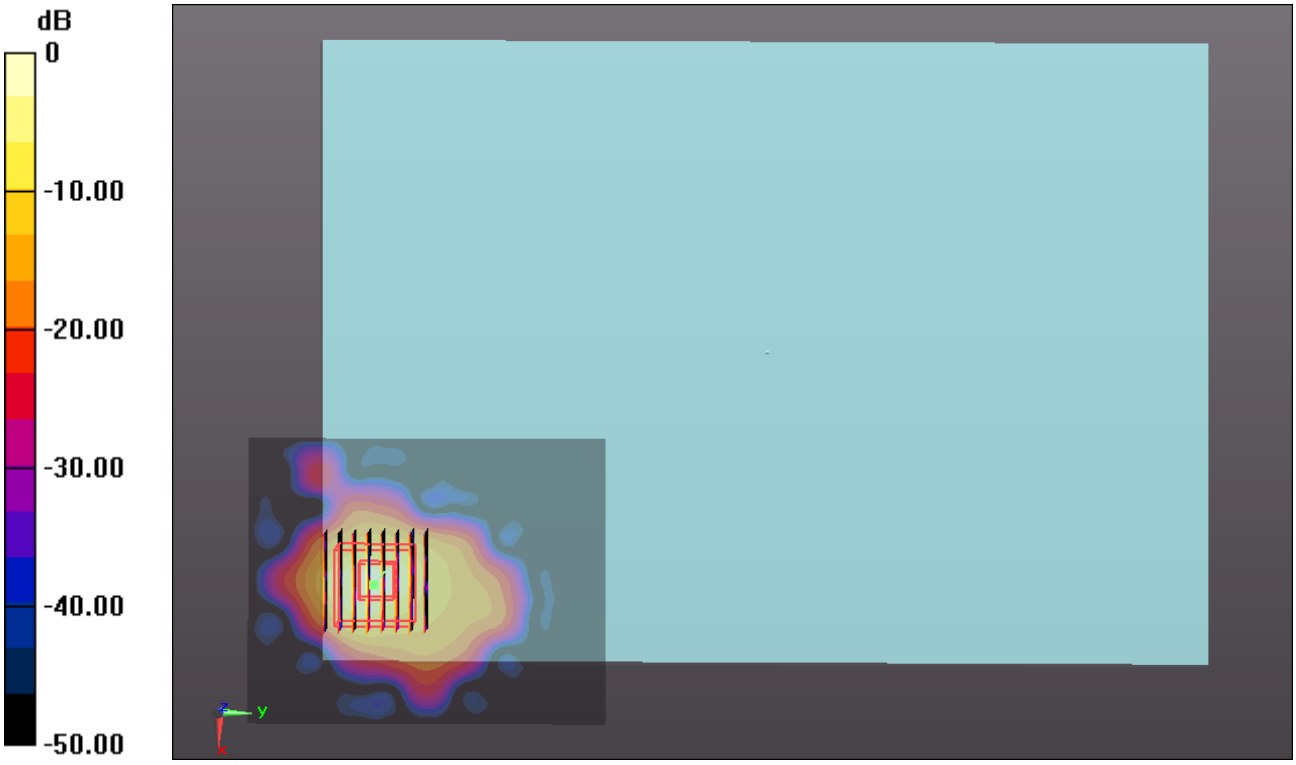

0 dB = 3.990mW/g

#04_WLAN 5.5GHz_802.11a_6M_Bottom Face 0cm_Ch108

Communication System: WIFI (0); Frequency: 5540 MHz;Duty Cycle: 1:1.126
Medium: MSL_5000_150115 Medium parameters used: f = 5540 MHz; σ = 5.635 mho/m; ε_r = 47.797; ρ = 1000 kg/m^3
Ambient Temperature：23.4 ℃； Liquid Temperature：22.7 ℃

DASY5 Configuration:
- Probe: EX3DV4 - SN3857; ConvF(3.98, 3.98, 3.98); Calibrated: 2014.05.23
- Sensor-Surface: 1.4mm (Mechanical Surface Detection)
- Electronics: DAE4 Sn1210; Calibrated: 2014.05.19
- Phantom: SAM3; Type: SAM; Serial: TP-1079
- Measurement SW: DASY52, Version 52.8 (8); SEMCAD X Version 14.4.5 (3634)

Ch108/Area Scan (81x121x1): Measurement grid: dx=10mm, dy=10mm
Maximum value of SAR (interpolated) = 1.927 mW/g

Ch108/Zoom Scan (8x8x7)/Cube 0: Measurement grid: dx=4mm, dy=4mm, dz=1.4mm
Reference Value = 0.130 V/m; Power Drift = -0.01 dB
Peak SAR (extrapolated) = 6.193 W/kg
SAR(1 g) = 0.925 mW/g; SAR(10 g) = 0.206 mW/g
Maximum value of SAR (measured) = 2.943 mW/g

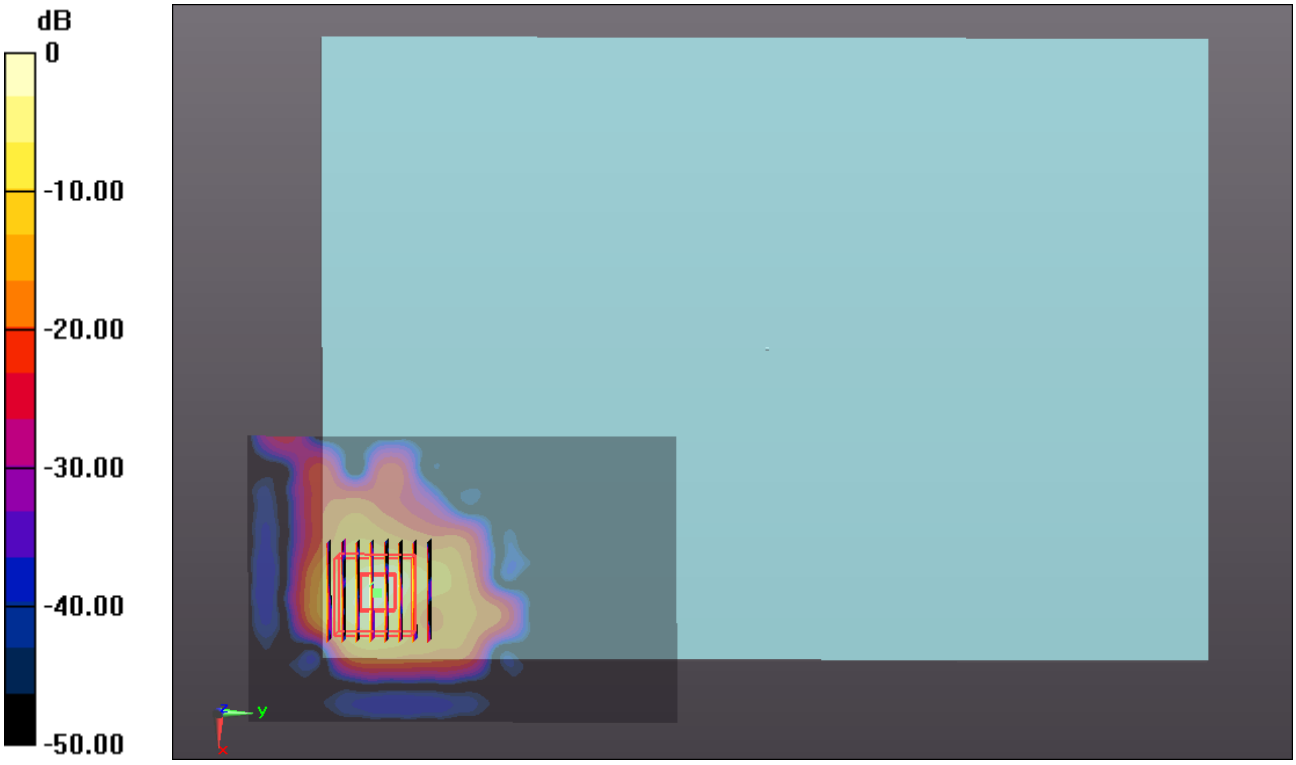

0 dB = 2.940mW/g

#05_WLAN 5.8GHz_802.11a_6M_Bottom Face 0cm_Ch157

Communication System: WIFI (0); Frequency: 5785 MHz;Duty Cycle: 1:1.126
Medium: MSL_5000_150115 Medium parameters used: f = 5785 MHz; σ = 5.961 mho/m; ε_r = 47.221; ρ = 1000 kg/m^3
Ambient Temperature：23.4 ℃； Liquid Temperature：22.7 ℃

DASY5 Configuration:
- Probe: EX3DV4 - SN3857; ConvF(4.21, 4.21, 4.21); Calibrated: 2014.05.23
- Sensor-Surface: 1.4mm (Mechanical Surface Detection)
- Electronics: DAE4 Sn1210; Calibrated: 2014.05.19
- Phantom: SAM3; Type: SAM; Serial: TP-1079
- Measurement SW: DASY52, Version 52.8 (8); SEMCAD X Version 14.4.5 (3634)

Ch157/Area Scan (121x81x1): Measurement grid: dx=10mm, dy=10mm
Maximum value of SAR (interpolated) = 2.444 mW/g

Ch157/Zoom Scan (8x8x7)/Cube 0: Measurement grid: dx=4mm, dy=4mm, dz=1.4mm
Reference Value = 0 V/m; Power Drift = 0.06 dB
Peak SAR (extrapolated) = 6.153 W/kg
SAR(1 g) = 0.972 mW/g; SAR(10 g) = 0.213 mW/g
Maximum value of SAR (measured) = 3.169 mW/g

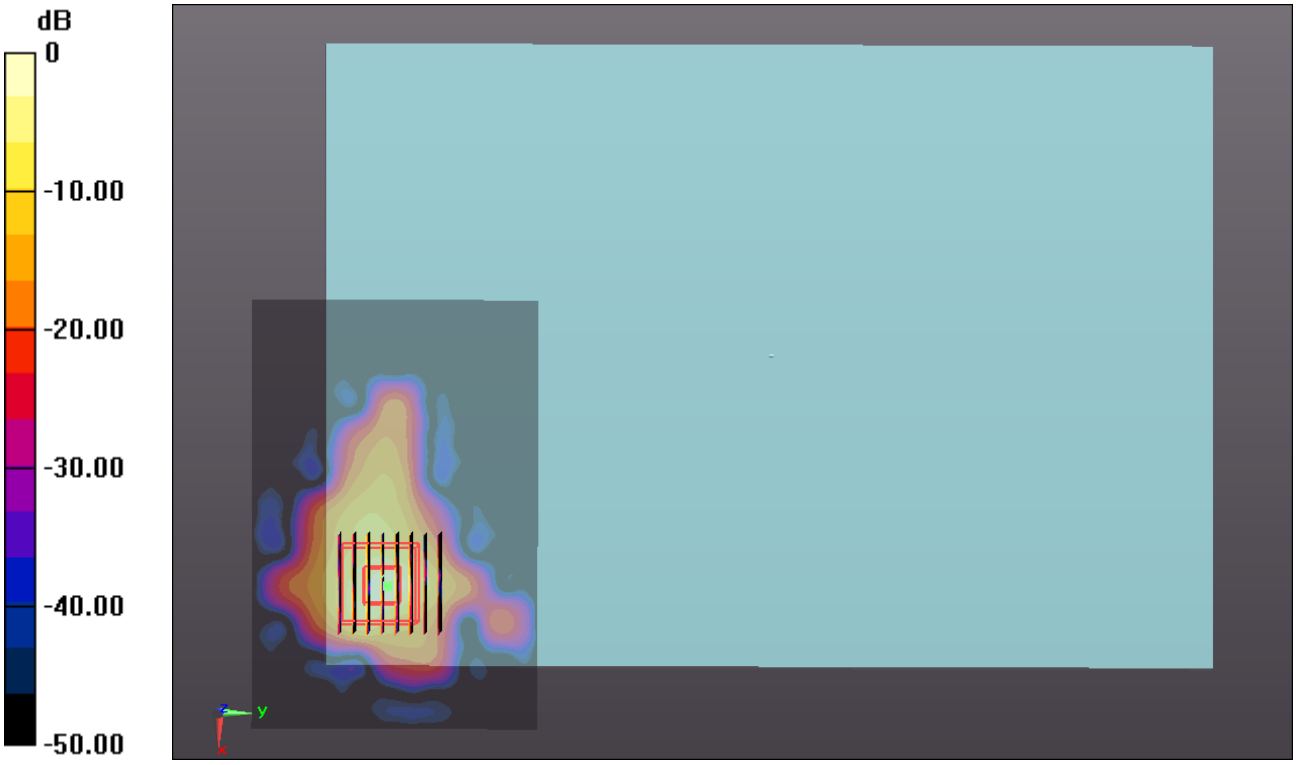

0 dB = 3.170mW/g

Appendix C. DASY Calibration Certificate

The DASY calibration certificates are shown as follows.

Calibration Laboratory of
Schmid & Partner
Engineering AG
Zeughausstrasse 43, 8004 Zurich, Switzerland

S Schweizerischer Kalibrierdienst
C Service suisse d'étalonnage
Servizio svizzero di taratura
S Swiss Calibration Service

Accredited by the Swiss Accreditation Service (SAS)
The Swiss Accreditation Service is one of the signatories to the EA Multilateral Agreement for the recognition of calibration certificates

Accreditation No.: SCS 108

Client **Sporton-TW (Auden)**

Certificate No: D2450V2-736_Aug14

CALIBRATION CERTIFICATE

Object	D2450V2 - SN: 736
Calibration procedure(s)	QA CAL-05.v9 Calibration procedure for dipole validation kits above 700 MHz
Calibration date:	August 21, 2014

This calibration certificate documents the traceability to national standards, which realize the physical units of measurements (SI).
The measurements and the uncertainties with confidence probability are given on the following pages and are part of the certificate.

All calibrations have been conducted in the closed laboratory facility: environment temperature (22 ± 3)°C and humidity < 70%.

Calibration Equipment used (M&TE critical for calibration)

Primary Standards	ID #	Cal Date (Certificate No.)	Scheduled Calibration
Power meter EPM-442A	GB37480704	09-Oct-13 (No. 217-01827)	Oct-14
Power sensor HP 8481A	US37292783	09-Oct-13 (No. 217-01827)	Oct-14
Power sensor HP 8481A	MY41092317	09-Oct-13 (No. 217-01828)	Oct-14
Reference 20 dB Attenuator	SN: 5058 (20k)	03-Apr-14 (No. 217-01918)	Apr-15
Type-N mismatch combination	SN: 5047.2 / 06327	03-Apr-14 (No. 217-01921)	Apr-15
Reference Probe ES3DV3	SN: 3205	30-Dec-13 (No. ES3-3205_Dec13)	Dec-14
DAE4	SN: 601	18-Aug-14 (No. DAE4-601_Aug14)	Aug-15

Secondary Standards	ID #	Check Date (in house)	Scheduled Check
RF generator R&S SMT-06	100005	04-Aug-99 (in house check Oct-13)	In house check: Oct-16
Network Analyzer HP 8753E	US37390585 S4206	18-Oct-01 (in house check Oct-13)	In house check: Oct-14

	Name	Function	Signature
Calibrated by:	Claudio Leubler	Laboratory Technician	
Approved by:	Katja Pokovic	Technical Manager	

Issued: August 21, 2014

This calibration certificate shall not be reproduced except in full without written approval of the laboratory.

Glossary:

TSL	tissue simulating liquid
ConvF	sensitivity in TSL / NORM x,y,z
N/A	not applicable or not measured

Calibration is Performed According to the Following Standards:

a) IEEE Std 1528-2013, "IEEE Recommended Practice for Determining the Peak Spatial-Averaged Specific Absorption Rate (SAR) in the Human Head from Wireless Communications Devices: Measurement Techniques", June 2013
b) IEC 62209-1, "Procedure to measure the Specific Absorption Rate (SAR) for hand-held devices used in close proximity to the ear (frequency range of 300 MHz to 3 GHz)", February 2005
c) KDB 865664, "SAR Measurement Requirements for 100 MHz to 6 GHz"

Additional Documentation:

d) DASY4/5 System Handbook

Methods Applied and Interpretation of Parameters:

- *Measurement Conditions:* Further details are available from the Validation Report at the end of the certificate. All figures stated in the certificate are valid at the frequency indicated.
- *Antenna Parameters with TSL:* The dipole is mounted with the spacer to position its feed point exactly below the center marking of the flat phantom section, with the arms oriented parallel to the body axis.
- *Feed Point Impedance and Return Loss:* These parameters are measured with the dipole positioned under the liquid filled phantom. The impedance stated is transformed from the measurement at the SMA connector to the feed point. The Return Loss ensures low reflected power. No uncertainty required.
- *Electrical Delay:* One-way delay between the SMA connector and the antenna feed point. No uncertainty required.
- *SAR measured:* SAR measured at the stated antenna input power.
- *SAR normalized:* SAR as measured, normalized to an input power of 1 W at the antenna connector.
- *SAR for nominal TSL parameters:* The measured TSL parameters are used to calculate the nominal SAR result.

The reported uncertainty of measurement is stated as the standard uncertainty of measurement multiplied by the coverage factor k=2, which for a normal distribution corresponds to a coverage probability of approximately 95%.

Measurement Conditions

DASY system configuration, as far as not given on page 1.

DASY Version	DASY5	V52.8.8
Extrapolation	Advanced Extrapolation	
Phantom	Modular Flat Phantom	
Distance Dipole Center - TSL	10 mm	with Spacer
Zoom Scan Resolution	dx, dy, dz = 5 mm	
Frequency	2450 MHz ± 1 MHz	

Head TSL parameters

The following parameters and calculations were applied.

	Temperature	**Permittivity**	**Conductivity**
Nominal Head TSL parameters	22.0 °C	39.2	1.80 mho/m
Measured Head TSL parameters	(22.0 ± 0.2) °C	38.0 ± 6 %	1.82 mho/m ± 6 %
Head TSL temperature change during test	< 0.5 °C	----	----

SAR result with Head TSL

SAR averaged over 1 cm^3 (1 g) of Head TSL	Condition	
SAR measured	250 mW input power	13.1 W/kg
SAR for nominal Head TSL parameters	normalized to 1W	**51.8 W/kg ± 17.0 % (k=2)**

SAR averaged over 10 cm^3 (10 g) of Head TSL	condition	
SAR measured	250 mW input power	6.06 W/kg
SAR for nominal Head TSL parameters	normalized to 1W	**24.0 W/kg ± 16.5 % (k=2)**

Body TSL parameters

The following parameters and calculations were applied.

	Temperature	**Permittivity**	**Conductivity**
Nominal Body TSL parameters	22.0 °C	52.7	1.95 mho/m
Measured Body TSL parameters	(22.0 ± 0.2) °C	50.5 ± 6 %	2.02 mho/m ± 6 %
Body TSL temperature change during test	< 0.5 °C	----	----

SAR result with Body TSL

SAR averaged over 1 cm^3 (1 g) of Body TSL	Condition	
SAR measured	250 mW input power	13.0 W/kg
SAR for nominal Body TSL parameters	normalized to 1W	**50.6 W/kg ± 17.0 % (k=2)**

SAR averaged over 10 cm^3 (10 g) of Body TSL	condition	
SAR measured	250 mW input power	5.99 W/kg
SAR for nominal Body TSL parameters	normalized to 1W	**23.6 W/kg ± 16.5 % (k=2)**

Appendix (Additional assessments outside the scope of SCS108)

Antenna Parameters with Head TSL

Impedance, transformed to feed point	55.5 Ω + 1.6 jΩ
Return Loss	- 25.3 dB

Antenna Parameters with Body TSL

Impedance, transformed to feed point	51.6 Ω + 3.4 jΩ
Return Loss	- 28.6 dB

General Antenna Parameters and Design

Electrical Delay (one direction)	1.158 ns

After long term use with 100W radiated power, only a slight warming of the dipole near the feedpoint can be measured.

The dipole is made of standard semirigid coaxial cable. The center conductor of the feeding line is directly connected to the second arm of the dipole. The antenna is therefore short-circuited for DC-signals. On some of the dipoles, small end caps are added to the dipole arms in order to improve matching when loaded according to the position as explained in the "Measurement Conditions" paragraph. The SAR data are not affected by this change. The overall dipole length is still according to the Standard.
No excessive force must be applied to the dipole arms, because they might bend or the soldered connections near the feedpoint may be damaged.

Additional EUT Data

Manufactured by	SPEAG
Manufactured on	August 26, 2003

DASY5 Validation Report for Head TSL

Date: 21.08.2014

Test Laboratory: SPEAG, Zurich, Switzerland

DUT: Dipole 2450 MHz; Type: D2450V2; Serial: D2450V2 - SN: 736

Communication System: UID 0 - CW; Frequency: 2450 MHz
Medium parameters used: f = 2450 MHz; σ = 1.82 S/m; ε_r = 38; ρ = 1000 kg/m^3
Phantom section: Flat Section
Measurement Standard: DASY5 (IEEE/IEC/ANSI C63.19-2011)

DASY52 Configuration:

- Probe: ES3DV3 - SN3205; ConvF(4.53, 4.53, 4.53); Calibrated: 30.12.2013;
- Sensor-Surface: 3mm (Mechanical Surface Detection)
- Electronics: DAE4 Sn601; Calibrated: 18.08.2014
- Phantom: Flat Phantom 5.0 (front); Type: QD000P50AA; Serial: 1001
- DASY52 52.8.8(1222); SEMCAD X 14.6.10(7331)

Dipole Calibration for Head Tissue/Pin=250 mW, d=10mm/Zoom Scan (7x7x7)/Cube 0:

Measurement grid: dx=5mm, dy=5mm, dz=5mm
Reference Value = 98.62 V/m; Power Drift = 0.07 dB
Peak SAR (extrapolated) = 27.1 W/kg
SAR(1 g) = 13.1 W/kg; SAR(10 g) = 6.06 W/kg
Maximum value of SAR (measured) = 16.7 W/kg

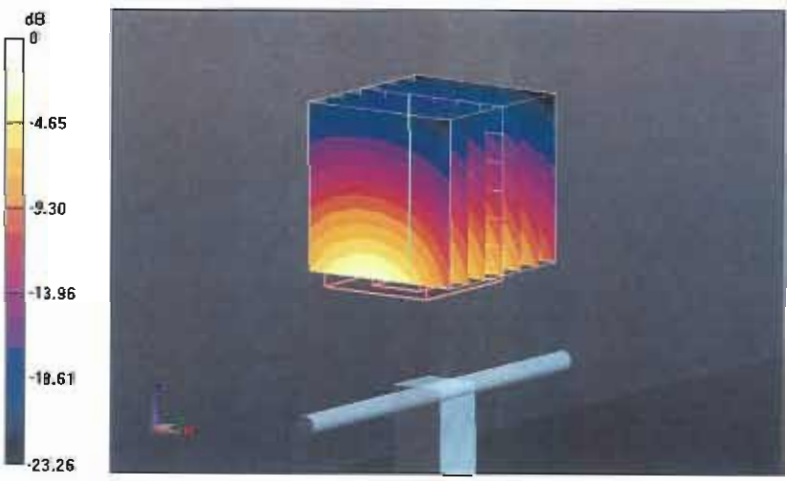

0 dB = 16.7 W/kg = 12.23 dBW/kg

Impedance Measurement Plot for Head TSL

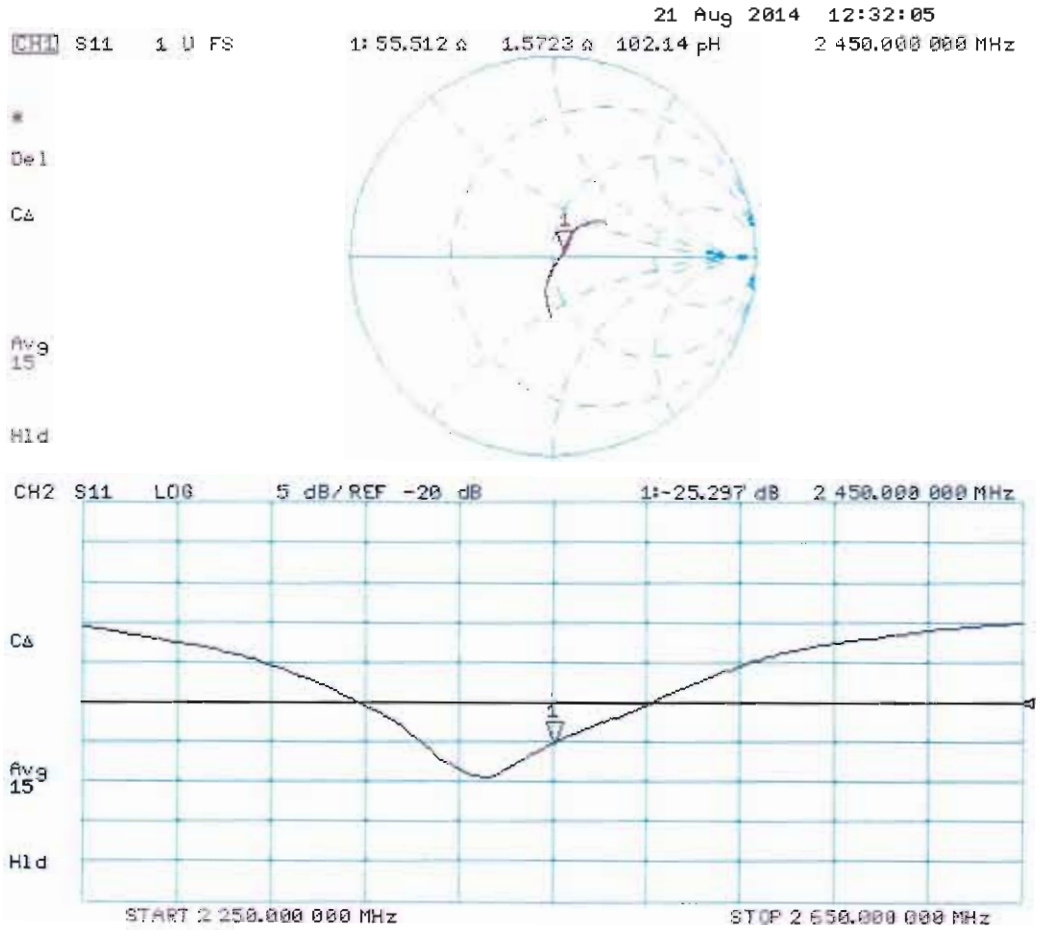

DASY5 Validation Report for Body TSL

Date: 21.08.2014

Test Laboratory: SPEAG, Zurich, Switzerland

DUT: Dipole 2450 MHz; Type: D2450V2; Serial: D2450V2 - SN: 736

Communication System: UID 0 - CW; Frequency: 2450 MHz
Medium parameters used: f = 2450 MHz; σ = 2.02 S/m; ε_r = 50.5; ρ = 1000 kg/m^3
Phantom section: Flat Section
Measurement Standard: DASY5 (IEEE/IEC/ANSI C63.19-2011)

DASY52 Configuration:

- Probe: ES3DV3 - SN3205; ConvF(4.35, 4.35, 4.35); Calibrated: 30.12.2013;
- Sensor-Surface: 3mm (Mechanical Surface Detection)
- Electronics: DAE4 Sn601; Calibrated: 18.08.2014
- Phantom: Flat Phantom 5.0 (back); Type: QD000P50AA; Serial: 1002
- DASY52 52.8.8(1222); SEMCAD X 14.6.10(7331)

Dipole Calibration for Body Tissue/Pin=250 mW, d=10mm/Zoom Scan (7x7x7)/Cube 0:

Measurement grid: dx=5mm, dy=5mm, dz=5mm
Reference Value = 95.24 V/m; Power Drift = 0.01 dB
Peak SAR (extrapolated) = 26.9 W/kg
SAR(1 g) = 13 W/kg; SAR(10 g) = 5.99 W/kg
Maximum value of SAR (measured) = 17.1 W/kg

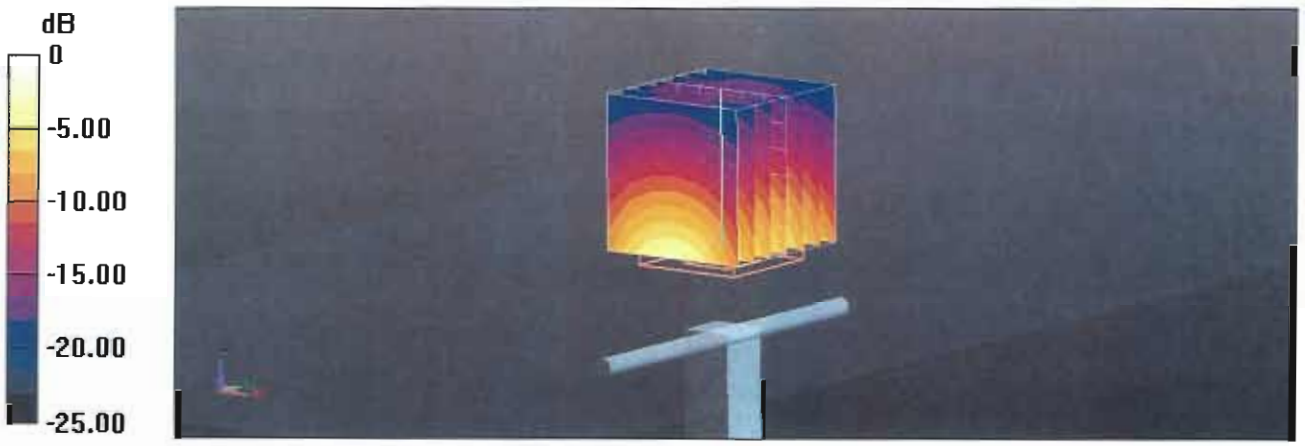

0 dB = 17.1 W/kg = 12.33 dBW/kg

Impedance Measurement Plot for Body TSL

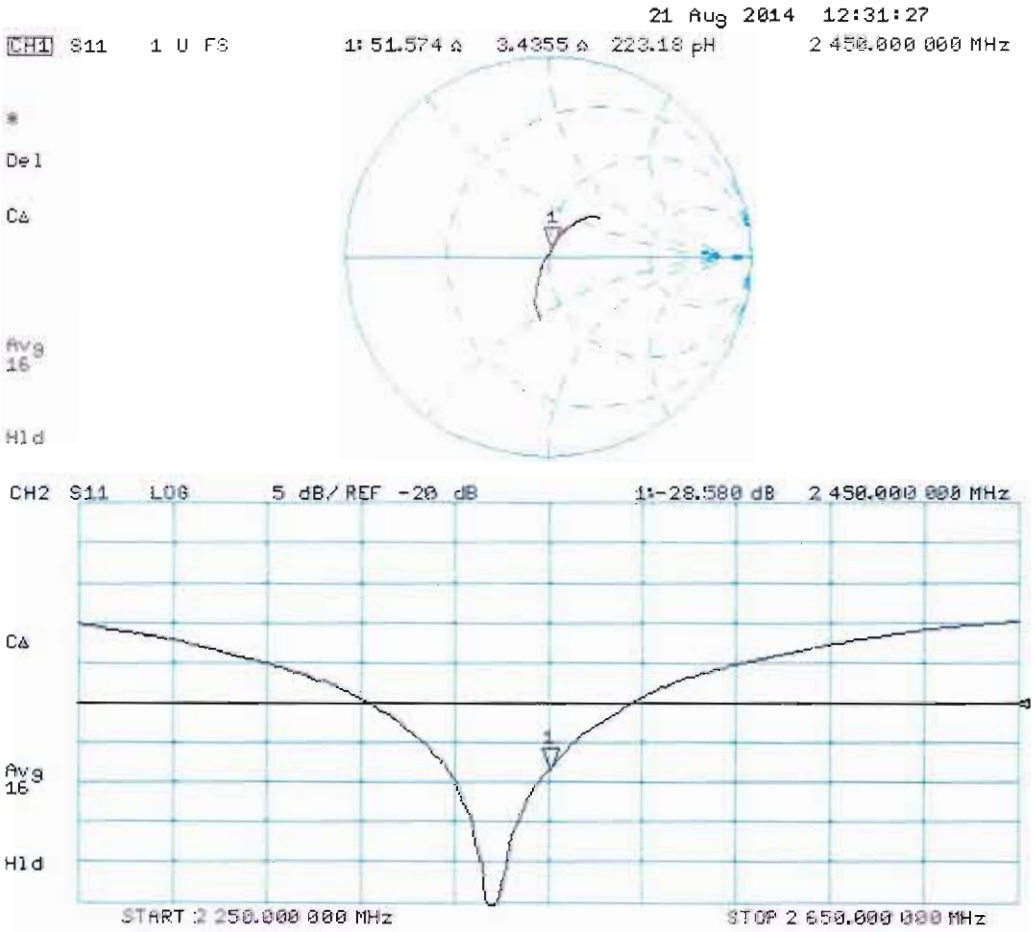

Calibration Laboratory of
Schmid & Partner
Engineering AG
Zeughausstrasse 43, 8004 Zurich, Switzerland

S Schweizerischer Kalibrierdienst
C Service suisse d'étalonnage
Servizio svizzero di taratura
S Swiss Calibration Service

Accredited by the Swiss Accreditation Service (SAS)
The Swiss Accreditation Service is one of the signatories to the EA Multilateral Agreement for the recognition of calibration certificates

Accreditation No.: SCS 108

Client **Sporton-TW (Auden)**

Certificate No: D5GHzV2-1128_Jul14

CALIBRATION CERTIFICATE

Object	D5GHzV2 - SN: 1128
Calibration procedure(s)	QA CAL-22.v2 Calibration procedure for dipole validation kits between 3-6 GHz
Calibration date:	July 22, 2014

This calibration certificate documents the traceability to national standards, which realize the physical units of measurements (SI).
The measurements and the uncertainties with confidence probability are given on the following pages and are part of the certificate.

All calibrations have been conducted in the closed laboratory facility: environment temperature (22 ± 3)°C and humidity < 70%.

Calibration Equipment used (M&TE critical for calibration)

Primary Standards	ID #	Cal Date (Certificate No.)	Scheduled Calibration
Power meter EPM-442A	GB37480704	09-Oct-13 (No. 217-01827)	Oct-14
Power sensor HP 8481A	US37292783	09-Oct-13 (No. 217-01827)	Oct-14
Power sensor HP 8481A	MY41092317	09-Oct-13 (No. 217-01828)	Oct-14
Reference 20 dB Attenuator	SN: 5058 (20k)	03-Apr-14 (No. 217-01918)	Apr-15
Type-N mismatch combination	SN: 5047.2 / 06327	03-Apr-14 (No. 217-01921)	Apr-15
Reference Probe EX3DV4	SN: 3503	30-Dec-13 (No. EX3-3503_Dec13)	Dec-14
DAE4	SN: 601	30-Apr-14 (No. DAE4-601_Apr14)	Apr-15

Secondary Standards	ID #	Check Date (in house)	Scheduled Check
RF generator R&S SMT-06	100005	04-Aug-99 (in house check Oct-13)	In house check: Oct-16
Network Analyzer HP 8753E	US37390585 S4206	18-Oct-01 (in house check Oct-13)	In house check: Oct-14

	Name	Function	Signature
Calibrated by:	Israe El-Naouq	Laboratory Technician	
Approved by:	Katja Pokovic	Technical Manager	

Issued: July 23, 2014

This calibration certificate shall not be reproduced except in full without written approval of the laboratory.

Glossary:

TSL	tissue simulating liquid
ConvF	sensitivity in TSL / NORM x,y,z
N/A	not applicable or not measured

Calibration is Performed According to the Following Standards:

a) IEC 62209-2, "Evaluation of Human Exposure to Radio Frequency Fields from Handheld and Body-Mounted Wireless Communication Devices in the Frequency Range of 30 MHz to 6 GHz: Human models, Instrumentation, and Procedures"; Part 2: "Procedure to determine the Specific Absorption Rate (SAR) for including accessories and multiple transmitters", March 2010
b) KDB 865664, "SAR Measurement Requirements for 100 MHz to 6 GHz"
c) IEEE Std 1528-2013, "IEEE Recommended Practice for Determining the Peak Spatial-Averaged Specific Absorption Rate (SAR) in the Human Head from Wireless Communications Devices: Measurement Techniques", June 2013

Additional Documentation:

d) DASY4/5 System Handbook

Methods Applied and Interpretation of Parameters:

- *Measurement Conditions:* Further details are available from the Validation Report at the end of the certificate. All figures stated in the certificate are valid at the frequency indicated.
- *Antenna Parameters with TSL:* The dipole is mounted with the spacer to position its feed point exactly below the center marking of the flat phantom section, with the arms oriented parallel to the body axis.
- *Feed Point Impedance and Return Loss:* These parameters are measured with the dipole positioned under the liquid filled phantom. The impedance stated is transformed from the measurement at the SMA connector to the feed point. The Return Loss ensures low reflected power. No uncertainty required.
- *Electrical Delay:* One-way delay between the SMA connector and the antenna feed point. No uncertainty required.
- *SAR measured:* SAR measured at the stated antenna input power.
- *SAR normalized:* SAR as measured, normalized to an input power of 1 W at the antenna connector.
- *SAR for nominal TSL parameters:* The measured TSL parameters are used to calculate the nominal SAR result.

The reported uncertainty of measurement is stated as the standard uncertainty of measurement multiplied by the coverage factor k=2, which for a normal distribution corresponds to a coverage probability of approximately 95%.

Measurement Conditions

DASY system configuration, as far as not given on page 1.

DASY Version	DASY5	V52.8.8
Extrapolation	Advanced Extrapolation	
Phantom	Modular Flat Phantom V5.0	
Distance Dipole Center - TSL	10 mm	with Spacer
Zoom Scan Resolution	dx, dy = 4.0 mm, dz = 1.4 mm	Graded Ratio = 1.4 (Z direction)
Frequency	5200 MHz ± 1 MHz 5300 MHz ± 1 MHz 5600 MHz ± 1 MHz 5800 MHz ± 1 MHz	

Head TSL parameters at 5200 MHz

The following parameters and calculations were applied.

	Temperature	**Permittivity**	**Conductivity**
Nominal Head TSL parameters	22.0 °C	36.0	4.66 mho/m
Measured Head TSL parameters	(22.0 ± 0.2) °C	34.6 ± 6 %	4.46 mho/m ± 6 %
Head TSL temperature change during test	< 0.5 °C	----	----

SAR result with Head TSL at 5200 MHz

SAR averaged over 1 cm^3 (1 g) of Head TSL	Condition	
SAR measured	100 mW input power	8.05 W/kg
SAR for nominal Head TSL parameters	normalized to 1W	**79.8 W/kg ± 19.9 % (k=2)**

SAR averaged over 10 cm^3 (10 g) of Head TSL	condition	
SAR measured	100 mW input power	2.31 W/kg
SAR for nominal Head TSL parameters	normalized to 1W	**22.8 W/kg ± 19.5 % (k=2)**

Head TSL parameters at 5300 MHz

The following parameters and calculations were applied.

	Temperature	Permittivity	Conductivity
Nominal Head TSL parameters	22.0 °C	35.9	4.76 mho/m
Measured Head TSL parameters	(22.0 ± 0.2) °C	34.4 ± 6 %	4.56 mho/m ± 6 %
Head TSL temperature change during test	< 0.5 °C	----	----

SAR result with Head TSL at 5300 MHz

SAR averaged over 1 cm^3 (1 g) of Head TSL	Condition	
SAR measured	100 mW input power	8.24 W/kg
SAR for nominal Head TSL parameters	normalized to 1W	**81.6 W / kg ± 19.9 % (k=2)**

SAR averaged over 10 cm^3 (10 g) of Head TSL	condition	
SAR measured	100 mW input power	2.37 W/kg
SAR for nominal Head TSL parameters	normalized to 1W	**23.4 W/kg ± 19.5 % (k=2)**

Head TSL parameters at 5600 MHz

The following parameters and calculations were applied.

	Temperature	Permittivity	Conductivity
Nominal Head TSL parameters	22.0 °C	35.5	5.07 mho/m
Measured Head TSL parameters	(22.0 ± 0.2) °C	34.0 ± 6 %	4.84 mho/m ± 6 %
Head TSL temperature change during test	< 0.5 °C	----	----

SAR result with Head TSL at 5600 MHz

SAR averaged over 1 cm^3 (1 g) of Head TSL	Condition	
SAR measured	100 mW input power	8.49 W/kg
SAR for nominal Head TSL parameters	normalized to 1W	**84.0 W/kg ± 19.9 % (k=2)**

SAR averaged over 10 cm^3 (10 g) of Head TSL	condition	
SAR measured	100 mW input power	2.42 W/kg
SAR for nominal Head TSL parameters	normalized to 1W	**23.9 W/kg ± 19.5 % (k=2)**

Head TSL parameters at 5800 MHz

The following parameters and calculations were applied.

	Temperature	Permittivity	Conductivity
Nominal Head TSL parameters	22.0 °C	35.3	5.27 mho/m
Measured Head TSL parameters	(22.0 ± 0.2) °C	33.8 ± 6 %	5.04 mho/m ± 6 %
Head TSL temperature change during test	< 0.5 °C	----	----

SAR result with Head TSL at 5800 MHz

SAR averaged over 1 cm^3 (1 g) of Head TSL	Condition	
SAR measured	100 mW input power	7.98 W/kg
SAR for nominal Head TSL parameters	normalized to 1W	**78.9 W/kg ± 19.9 % (k=2)**

SAR averaged over 10 cm^3 (10 g) of Head TSL	condition	
SAR measured	100 mW input power	2.28 W/kg
SAR for nominal Head TSL parameters	normalized to 1W	**22.5 W/kg ± 19.5 % (k=2)**

Body TSL parameters at 5200 MHz

The following parameters and calculations were applied.

	Temperature	Permittivity	Conductivity
Nominal Body TSL parameters	22.0 °C	49.0	5.30 mho/m
Measured Body TSL parameters	(22.0 ± 0.2) °C	47.7 ± 6 %	5.38 mho/m ± 6 %
Body TSL temperature change during test	< 0.5 °C	----	----

SAR result with Body TSL at 5200 MHz

SAR averaged over 1 cm^3 (1 g) of Body TSL	Condition	
SAR measured	100 mW input power	7.66 W/kg
SAR for nominal Body TSL parameters	normalized to 1W	**76.2 W/kg ± 19.9 % (k=2)**

SAR averaged over 10 cm^3 (10 g) of Body TSL	condition	
SAR measured	100 mW input power	2.15 W/kg
SAR for nominal Body TSL parameters	normalized to 1W	**21.4 W/kg ± 19.5 % (k=2)**

Body TSL parameters at 5300 MHz

The following parameters and calculations were applied.

	Temperature	Permittivity	Conductivity
Nominal Body TSL parameters	22.0 °C	48.9	5.42 mho/m
Measured Body TSL parameters	(22.0 ± 0.2) °C	47.6 ± 6 %	5.51 mho/m ± 6 %
Body TSL temperature change during test	< 0.5 °C	----	----

SAR result with Body TSL at 5300 MHz

SAR averaged over 1 cm^3 (1 g) of Body TSL	Condition	
SAR measured	100 mW input power	7.81 W/kg
SAR for nominal Body TSL parameters	normalized to 1W	**77.7 W/kg ± 19.9 % (k=2)**

SAR averaged over 10 cm^3 (10 g) of Body TSL	condition	
SAR measured	100 mW input power	2.20 W/kg
SAR for nominal Body TSL parameters	normalized to 1W	**21.9 W/kg ± 19.5 % (k=2)**

Body TSL parameters at 5600 MHz

The following parameters and calculations were applied.

	Temperature	Permittivity	Conductivity
Nominal Body TSL parameters	22.0 °C	48.5	5.77 mho/m
Measured Body TSL parameters	(22.0 ± 0.2) °C	47.1 ± 6 %	5.91 mho/m ± 6 %
Body TSL temperature change during test	< 0.5 °C	----	----

SAR result with Body TSL at 5600 MHz

SAR averaged over 1 cm^3 (1 g) of Body TSL	Condition	
SAR measured	100 mW input power	8.19 W/kg
SAR for nominal Body TSL parameters	normalized to 1W	**81.5 W/kg ± 19.9 % (k=2)**

SAR averaged over 10 cm^3 (10 g) of Body TSL	condition	
SAR measured	100 mW input power	2.28 W/kg
SAR for nominal Body TSL parameters	normalized to 1W	**22.6 W/kg ± 19.5 % (k=2)**

Body TSL parameters at 5800 MHz

The following parameters and calculations were applied.

	Temperature	Permittivity	Conductivity
Nominal Body TSL parameters	22.0 °C	48.2	6.00 mho/m
Measured Body TSL parameters	(22.0 ± 0.2) °C	46.7 ± 6 %	6.18 mho/m ± 6 %
Body TSL temperature change during test	< 0.5 °C	----	----

SAR result with Body TSL at 5800 MHz

SAR averaged over 1 cm^3 (1 g) of Body TSL	Condition	
SAR measured	100 mW input power	7.63 W/kg
SAR for nominal Body TSL parameters	normalized to 1W	**75.9 W/kg ± 19.9 % (k=2)**

SAR averaged over 10 cm^3 (10 g) of Body TSL	condition	
SAR measured	100 mW input power	2.12 W/kg
SAR for nominal Body TSL parameters	normalized to 1W	**21.0 W/kg ± 19.5 % (k=2)**

Appendix (Additional assessments outside the scope of SCS108)

Antenna Parameters with Head TSL at 5200 MHz

Impedance, transformed to feed point	48.8 Ω - 5.8 jΩ
Return Loss	- 24.5 dB

Antenna Parameters with Head TSL at 5300 MHz

Impedance, transformed to feed point	49.7 Ω - 1.7 jΩ
Return Loss	- 35.3 dB

Antenna Parameters with Head TSL at 5600 MHz

Impedance, transformed to feed point	55.5 Ω - 2.5 jΩ
Return Loss	- 24.9 dB

Antenna Parameters with Head TSL at 5800 MHz

Impedance, transformed to feed point	53.4 Ω - 1.2 jΩ
Return Loss	- 29.1 dB

Antenna Parameters with Body TSL at 5200 MHz

Impedance, transformed to feed point	51.3 Ω - 4.6 jΩ
Return Loss	- 26.6 dB

Antenna Parameters with Body TSL at 5300 MHz

Impedance, transformed to feed point	50.7 Ω + 0.3 jΩ
Return Loss	- 42.1 dB

Antenna Parameters with Body TSL at 5600 MHz

Impedance, transformed to feed point	56.8 Ω + 1.7 jΩ
Return Loss	- 23.7 dB

Antenna Parameters with Body TSL at 5800 MHz

Impedance, transformed to feed point	54.5 Ω + 2.6 jΩ
Return Loss	- 26.1 dB

General Antenna Parameters and Design

Electrical Delay (one direction)	1.209 ns

After long term use with 100W radiated power, only a slight warming of the dipole near the feedpoint can be measured.

The dipole is made of standard semirigid coaxial cable. The center conductor of the feeding line is directly connected to the second arm of the dipole. The antenna is therefore short-circuited for DC-signals. On some of the dipoles, small end caps are added to the dipole arms in order to improve matching when loaded according to the position as explained in the "Measurement Conditions" paragraph. The SAR data are not affected by this change. The overall dipole length is still according to the Standard.
No excessive force must be applied to the dipole arms, because they might bend or the soldered connections near the feedpoint may be damaged.

Additional EUT Data

Manufactured by	SPEAG
Manufactured on	September 08, 2011

DASY5 Validation Report for Head TSL

Date: 21.07.2014

Test Laboratory: SPEAG, Zurich, Switzerland

DUT: Dipole 5GHz; Type: D5GHzV2; Serial: D5GHzV2 - SN: 1128

Communication System: UID 0 - CW; Frequency: 5200 MHz, Frequency: 5300 MHz, Frequency: 5600 MHz, Frequency: 5800 MHz
Medium parameters used: f = 5200 MHz; σ = 4.46 S/m; ε_r = 34.6; ρ = 1000 kg/m^3 , Medium parameters used: f = 5300 MHz; σ = 4.56 S/m; ε_r = 34.4; ρ = 1000 kg/m^3 , Medium parameters used: f = 5600 MHz; σ = 4.84 S/m; ε_r = 34; ρ = 1000 kg/m^3 , Medium parameters used: f = 5800 MHz; σ = 5.04 S/m; ε_r = 33.8; ρ = 1000 kg/m^3
Phantom section: Flat Section
Measurement Standard: DASY5 (IEEE/IEC/ANSI C63.19-2011)

DASY52 Configuration:

- Probe: EX3DV4 - SN3503; ConvF(5.52, 5.52, 5.52); Calibrated: 30.12.2013, ConvF(5.2, 5.2, 5.2); Calibrated: 30.12.2013, ConvF(4.86, 4.86, 4.86); Calibrated: 30.12.2013, ConvF(4.91, 4.91, 4.91); Calibrated: 30.12.2013;
- Sensor-Surface: 1.4mm (Mechanical Surface Detection)
- Electronics: DAE4 Sn601; Calibrated: 30.04.2014
- Phantom: Flat Phantom 5.0 (front); Type: QD000P50AA; Serial: 1001
- DASY52 52.8.8(1222); SEMCAD X 14.6.10(7331)

Dipole Calibration for Head Tissue/Pin=100mW, dist=10mm, f=5200 MHz/Zoom Scan, dist=1.4mm (8x8x7)/Cube 0: Measurement grid: dx=4mm, dy=4mm, dz=1.4mm
Reference Value = 64.76 V/m; Power Drift = 0.02 dB
Peak SAR (extrapolated) = 29.1 W/kg
SAR(1 g) = 8.05 W/kg; SAR(10 g) = 2.31 W/kg
Maximum value of SAR (measured) = 18.9 W/kg

Dipole Calibration for Head Tissue/Pin=100mW, dist=10mm, f=5300 MHz/Zoom Scan, dist=1.4mm (8x8x7)/Cube 0: Measurement grid: dx=4mm, dy=4mm, dz=1.4mm
Reference Value = 64.86 V/m; Power Drift = 0.04 dB
Peak SAR (extrapolated) = 30.8 W/kg
SAR(1 g) = 8.24 W/kg; SAR(10 g) = 2.37 W/kg
Maximum value of SAR (measured) = 19.5 W/kg

Dipole Calibration for Head Tissue/Pin=100mW, dist=10mm, f=5600 MHz/Zoom Scan, dist=1.4mm (8x8x7)/Cube 0: Measurement grid: dx=4mm, dy=4mm, dz=1.4mm
Reference Value = 64.74 V/m; Power Drift = 0.09 dB
Peak SAR (extrapolated) = 33.7 W/kg
SAR(1 g) = 8.49 W/kg; SAR(10 g) = 2.42 W/kg
Maximum value of SAR (measured) = 20.5 W/kg

Dipole Calibration for Head Tissue/Pin=100mW, dist=10mm, f=5800 MHz/Zoom Scan, dist=1.4mm (8x8x7)/Cube 0: Measurement grid: dx=4mm, dy=4mm, dz=1.4mm
Reference Value = 62.12 V/m; Power Drift = 0.03 dB
Peak SAR (extrapolated) = 32.7 W/kg
SAR(1 g) = 7.98 W/kg; SAR(10 g) = 2.28 W/kg
Maximum value of SAR (measured) = 19.2 W/kg

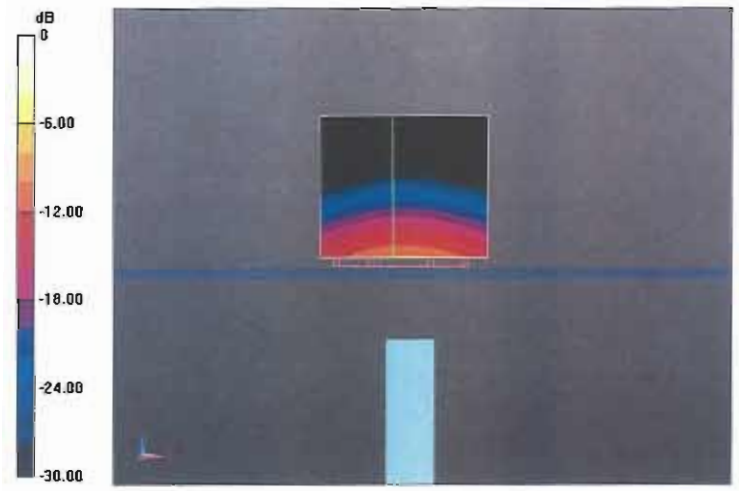

0 dB = 19.2 W/kg = 12.83 dBW/kg

Impedance Measurement Plot for Head TSL

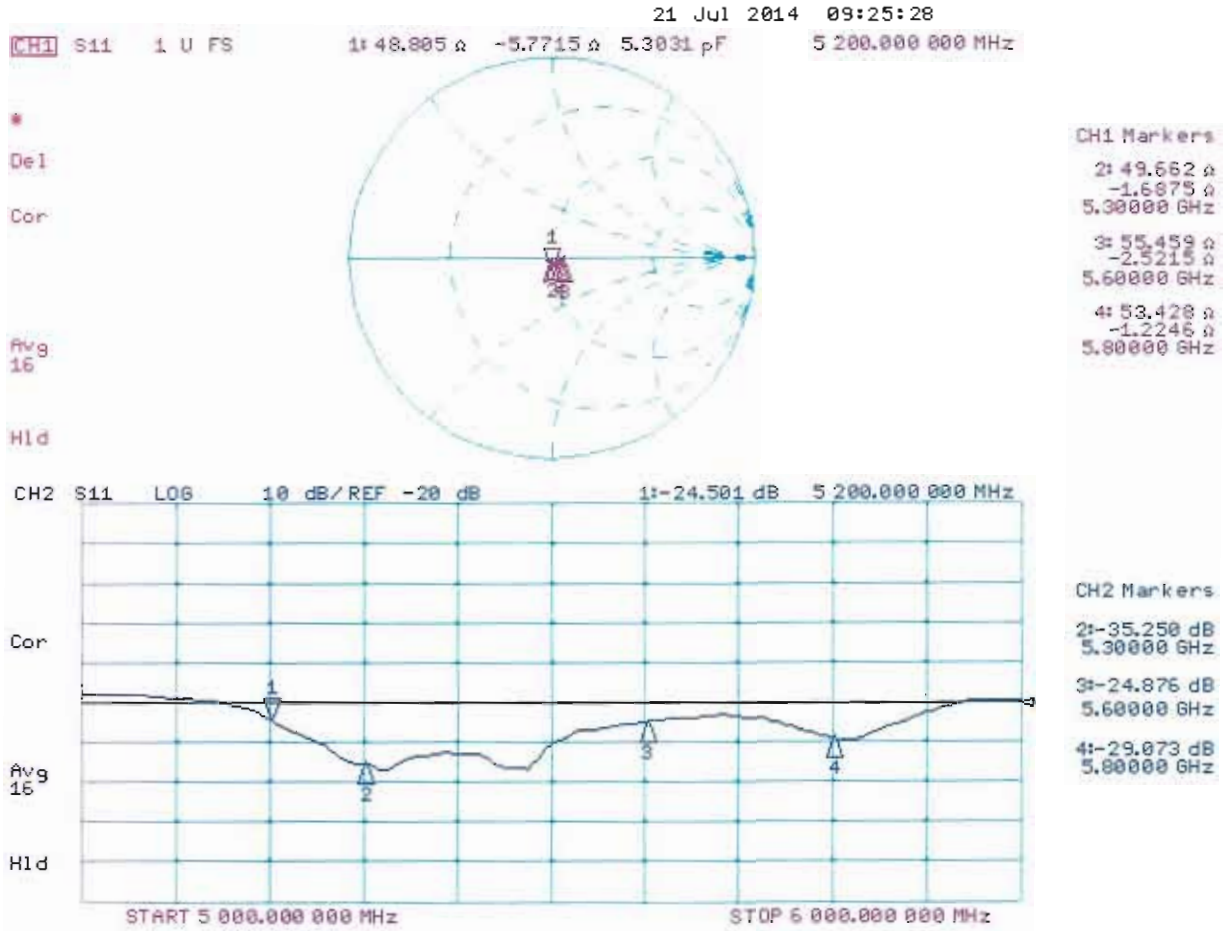

DASY5 Validation Report for Body TSL

Date: 22.07.2014

Test Laboratory: SPEAG, Zurich, Switzerland

DUT: Dipole 5GHz; Type: D5GHzV2; Serial: D5GHzV2 - SN: 1128

Communication System: UID 0 - CW; Frequency: 5200 MHz, Frequency: 5300 MHz, Frequency: 5600 MHz, Frequency: 5800 MHz
Medium parameters used: f = 5200 MHz; σ = 5.38 S/m; ε_r = 47.7; ρ = 1000 kg/m^3 , Medium parameters used: f = 5300 MHz; σ = 5.51 S/m; ε_r = 47.6; ρ = 1000 kg/m^3 , Medium parameters used: f = 5600 MHz; σ = 5.91 S/m; ε_r = 47.1; ρ = 1000 kg/m^3 , Medium parameters used: f = 5800 MHz; σ = 6.18 S/m; ε_r = 46.7; ρ = 1000 kg/m^3
Phantom section: Flat Section
Measurement Standard: DASY5 (IEEE/IEC/ANSI C63.19-2011)

DASY52 Configuration:

- Probe: EX3DV4 - SN3503; ConvF(5.01, 5.01, 5.01); Calibrated: 30.12.2013, ConvF(4.76, 4.76, 4.76); Calibrated: 30.12.2013, ConvF(4.3, 4.3, 4.3); Calibrated: 30.12.2013, ConvF(4.47, 4.47, 4.47); Calibrated: 30.12.2013;
- Sensor-Surface: 1.4mm (Mechanical Surface Detection)
- Electronics: DAE4 Sn601; Calibrated: 30.04.2014
- Phantom: Flat Phantom 5.0 (back); Type: QD000P50AA; Serial: 1002
- DASY52 52.8.8(1222); SEMCAD X 14.6.10(7331)

Dipole Calibration for Body Tissue/Pin=100mW, dist=10mm, f=5200 MHz/Zoom Scan, dist=1.4mm (8x8x7)/Cube 0: Measurement grid: dx=4mm, dy=4mm, dz=1.4mm
Reference Value = 59.96 V/m; Power Drift = -0.03 dB
Peak SAR (extrapolated) = 29.8 W/kg
SAR(1 g) = 7.66 W/kg; SAR(10 g) = 2.15 W/kg
Maximum value of SAR (measured) = 17.8 W/kg

Dipole Calibration for Body Tissue/Pin=100mW, dist=10mm, f=5300 MHz/Zoom Scan, dist=1.4mm (8x8x7)/Cube 0: Measurement grid: dx=4mm, dy=4mm, dz=1.4mm
Reference Value = 59.52 V/m; Power Drift = 0.00 dB
Peak SAR (extrapolated) = 31.2 W/kg
SAR(1 g) = 7.81 W/kg; SAR(10 g) = 2.2 W/kg
Maximum value of SAR (measured) = 18.2 W/kg

Dipole Calibration for Body Tissue/Pin=100mW, dist=10mm, f=5600 MHz/Zoom Scan, dist=1.4mm (8x8x7)/Cube 0: Measurement grid: dx=4mm, dy=4mm, dz=1.4mm
Reference Value = 59.28 V/m; Power Drift = -0.02 dB
Peak SAR (extrapolated) = 35.8 W/kg
SAR(1 g) = 8.19 W/kg; SAR(10 g) = 2.28 W/kg
Maximum value of SAR (measured) = 20.0 W/kg

Dipole Calibration for Body Tissue/Pin=100mW, dist=10mm, f=5800 MHz/Zoom Scan, dist=1.4mm (8x8x7)/Cube 0: Measurement grid: dx=4mm, dy=4mm, dz=1.4mm
Reference Value = 56.21 V/m; Power Drift = -0.03 dB
Peak SAR (extrapolated) = 34.9 W/kg
SAR(1 g) = 7.63 W/kg; SAR(10 g) = 2.12 W/kg
Maximum value of SAR (measured) = 18.7 W/kg

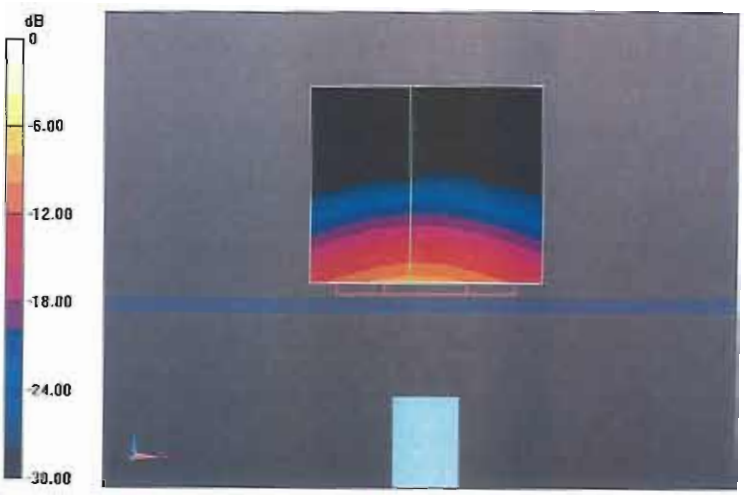

0 dB = 18.7 W/kg = 12.72 dBW/kg

Impedance Measurement Plot for Body TSL

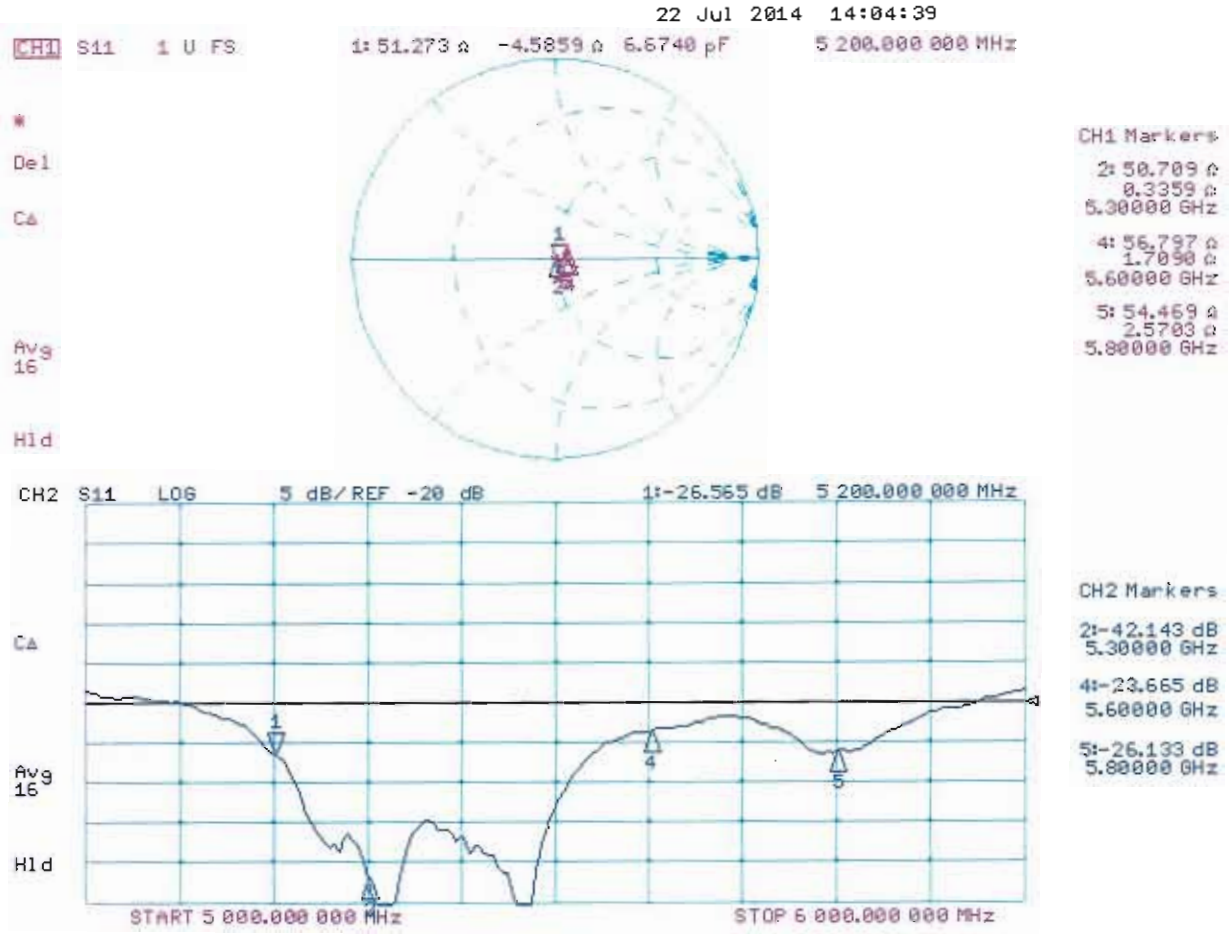

Schmid & Partner Engineering AG

s p e a g

Zeughausstrasse 43, 8004 Zurich, Switzerland
Phone +41 44 245 9700, Fax +41 44 245 9779
info@speag.com, http://www.speag.com

IMPORTANT NOTICE

USAGE OF THE DAE 4

The DAE unit is a delicate, high precision instrument and requires careful treatment by the user. There are no serviceable parts inside the DAE. Special attention shall be given to the following points:

Battery Exchange: The battery cover of the DAE4 unit is closed using a screw, over tightening the screw may cause the threads inside the DAE to wear out.

Shipping of the DAE: Before shipping the DAE to SPEAG for calibration, remove the batteries and pack the DAE in an antistatic bag. This antistatic bag shall then be packed into a larger box or container which protects the DAE from impacts during transportation. The package shall be marked to indicate that a fragile instrument is inside.

E-Stop Failures: Touch detection may be malfunctioning due to broken magnets in the E-stop. Rough handling of the E-stop may lead to damage of these magnets. Touch and collision errors are often caused by dust and dirt accumulated in the E-stop. To prevent E-stop failure, the customer shall always mount the probe to the DAE carefully and keep the DAE unit in a non-dusty environment if not used for measurements.

Repair: Minor repairs are performed at no extra cost during the annual calibration. However, SPEAG reserves the right to charge for any repair especially if rough unprofessional handling caused the defect.

DASY Configuration Files: Since the exact values of the DAE input resistances, as measured during the calibration procedure of a DAE unit, are not used by the DASY software, a nominal value of 200 MOhm is given in the corresponding configuration file.

Important Note:
Warranty and calibration is void if the DAE unit is disassembled partly or fully by the Customer.

Important Note:
Never attempt to grease or oil the E-stop assembly. Cleaning and readjusting of the E-stop assembly is allowed by certified SPEAG personnel only and is part of the annual calibration procedure.

Important Note:
To prevent damage of the DAE probe connector pins, use great care when installing the probe to the DAE. Carefully connect the probe with the connector notch oriented in the mating position. Avoid any rotational movement of the probe body versus the DAE while turning the locking nut of the connector. The same care shall be used when disconnecting the probe from the DAE.

Calibration Laboratory of
Schmid & Partner
Engineering AG
Zeughausstrasse 43, 8004 Zurich, Switzerland

S Schweizerischer Kalibrierdienst
C Service suisse d'étalonnage
Servizio svizzero di taratura
S Swiss Calibration Service

Accredited by the Swiss Accreditation Service (SAS)
The Swiss Accreditation Service is one of the signatories to the EA Multilateral Agreement for the recognition of calibration certificates

Accreditation No.: SCS 108

Client **Sporton-CN (Auden)**

Certificate No: DAE4-1210_May14

CALIBRATION CERTIFICATE

Object	DAE4 - SD 000 D04 BM - SN: 1210
Calibration procedure(s)	QA CAL-06.v26 Calibration procedure for the data acquisition electronics (DAE)
Calibration date:	May 19, 2014

This calibration certificate documents the traceability to national standards, which realize the physical units of measurements (SI). The measurements and the uncertainties with confidence probability are given on the following pages and are part of the certificate.

All calibrations have been conducted in the closed laboratory facility: environment temperature (22 ± 3)°C and humidity < 70%.

Calibration Equipment used (M&TE critical for calibration)

Primary Standards	ID #	Cal Date (Certificate No.)	Scheduled Calibration
Keithley Multimeter Type 2001	SN: 0810278	01-Oct-13 (No:13976)	Oct-14
Secondary Standards	**ID #**	**Check Date (in house)**	**Scheduled Check**
Auto DAE Calibration Unit	SE UWS 053 AA 1001	07-Jan-14 (in house check)	In house check: Jan-15
Calibrator Box V2.1	SE UMS 006 AA 1002	07-Jan-14 (in house check)	In house check: Jan-15

	Name	Function	Signature
Calibrated by:	Dominique Steffen	Technician	
Approved by:	Fin Bomholt	Deputy Technical Manager	i.V.

Issued: May 20, 2014

This calibration certificate shall not be reproduced except in full without written approval of the laboratory.

Glossary

DAE	data acquisition electronics
Connector angle	information used in DASY system to align probe sensor X to the robot coordinate system.

Methods Applied and Interpretation of Parameters

- *DC Voltage Measurement:* Calibration Factor assessed for use in DASY system by comparison with a calibrated instrument traceable to national standards. The figure given corresponds to the full scale range of the voltmeter in the respective range.
- *Connector angle*: The angle of the connector is assessed measuring the angle mechanically by a tool inserted. Uncertainty is not required.
- The following parameters as documented in the Appendix contain technical information as a result from the performance test and require no uncertainty.
  - *DC Voltage Measurement Linearity:* Verification of the Linearity at +10% and -10% of the nominal calibration voltage. Influence of offset voltage is included in this measurement.
  - *Common mode sensitivity:* Influence of a positive or negative common mode voltage on the differential measurement.
  - *Channel separation:* Influence of a voltage on the neighbor channels not subject to an input voltage.
  - *AD Converter Values with inputs shorted:* Values on the internal AD converter corresponding to zero input voltage
  - *Input Offset Measurement*: Output voltage and statistical results over a large number of zero voltage measurements.
  - *Input Offset Current:* Typical value for information; Maximum channel input offset current, not considering the input resistance.
  - *Input resistance:* Typical value for information: DAE input resistance at the connector, during internal auto-zeroing and during measurement.
  - *Low Battery Alarm Voltage:* Typical value for information. Below this voltage, a battery alarm signal is generated.
  - *Power consumption:* Typical value for information. Supply currents in various operating modes.

DC Voltage Measurement

A/D - Converter Resolution nominal

High Range:	1LSB =	6.1μV ,	full range =	-100...+300 mV
Low Range:	1LSB =	61nV ,	full range =	-1.....+3mV

DASY measurement parameters: Auto Zero Time: 3 sec; Measuring time: 3 sec

Calibration Factors	X	Y	Z
High Range	404.126 ± 0.02% (k=2)	404.956 ± 0.02% (k=2)	405.065 ± 0.02% (k=2)
Low Range	4.00002 ± 1.50% (k=2)	3.98327 ± 1.50% (k=2)	4.00021 ± 1.50% (k=2)

Connector Angle

Connector Angle to be used in DASY system	123.5 ° ± 1 °

Appendix

1. DC Voltage Linearity

High Range		Reading (µV)	Difference (µV)	Error (%)
Channel X	+ Input	199993.16	-3.08	-0.00
Channel X	+ Input	20001.58	0.86	0.00
Channel X	- Input	-19997.88	2.96	-0.01
Channel Y	+ Input	199997.46	1.25	0.00
Channel Y	+ Input	20001.02	0.31	0.00
Channel Y	- Input	-20000.67	0.41	-0.00
Channel Z	+ Input	199997.96	1.16	0.00
Channel Z	+ Input	20000.22	-0.47	-0.00
Channel Z	- Input	-20000.31	0.71	-0.00

Low Range		Reading (µV)	Difference (µV)	Error (%)
Channel X	+ Input	2001.44	0.40	0.02
Channel X	+ Input	201.65	0.25	0.12
Channel X	- Input	-198.86	-0.60	0.30
Channel Y	+ Input	2001.05	0.10	0.01
Channel Y	+ Input	200.89	-0.51	-0.25
Channel Y	- Input	-198.70	-0.35	0.18
Channel Z	+ Input	2001.15	0.23	0.01
Channel Z	+ Input	200.32	-1.08	-0.54
Channel Z	- Input	-199.61	-1.14	0.57

2. Common mode sensitivity

DASY measurement parameters: Auto Zero Time: 3 sec; Measuring time: 3 sec

	Common mode Input Voltage (mV)	High Range Average Reading (µV)	Low Range Average Reading (µV)
Channel X	200	-5.19	-7.07
	- 200	7.82	6.50
Channel Y	200	-3.56	-3.90
	- 200	4.19	4.35
Channel Z	200	12.21	11.95
	- 200	-14.51	-14.28

3. Channel separation

DASY measurement parameters: Auto Zero Time: 3 sec; Measuring time: 3 sec

	Input Voltage (mV)	Channel X (µV)	Channel Y (µV)	Channel Z (µV)
Channel X	200	-	1.78	-3.94
Channel Y	200	8.13	-	2.67
Channel Z	200	9.14	6.43	-

4. AD-Converter Values with inputs shorted

DASY measurement parameters: Auto Zero Time: 3 sec; Measuring time: 3 sec

	High Range (LSB)	Low Range (LSB)
Channel X	15954	15797
Channel Y	15962	16451
Channel Z	15874	16936

5. Input Offset Measurement

DASY measurement parameters: Auto Zero Time: 3 sec; Measuring time: 3 sec
Input 10MΩ

	Average (µV)	min. Offset (µV)	max. Offset (µV)	Std. Deviation (µV)
Channel X	-0.85	-1.82	-0.15	0.34
Channel Y	-0.27	-1.81	0.54	0.39
Channel Z	-0.30	-1.29	0.94	0.43

6. Input Offset Current

Nominal Input circuitry offset current on all channels: <25fA

7. Input Resistance (Typical values for information)

	Zeroing (kOhm)	Measuring (MOhm)
Channel X	200	200
Channel Y	200	200
Channel Z	200	200

8. Low Battery Alarm Voltage (Typical values for information)

Typical values	Alarm Level (VDC)
Supply (+ Vcc)	+7.9
Supply (- Vcc)	-7.6

9. Power Consumption (Typical values for information)

Typical values	Switched off (mA)	Stand by (mA)	Transmitting (mA)
Supply (+ Vcc)	+0.01	+6	+14
Supply (- Vcc)	–0.01	-8	-9

Calibration Laboratory of
Schmid & Partner
Engineering AG
Zeughausstrasse 43, 8004 Zurich, Switzerland

S Schweizerischer Kalibrierdienst
C Service suisse d'étalonnage
Servizio svizzero di taratura
S Swiss Calibration Service

Accredited by the Swiss Accreditation Service (SAS)
The Swiss Accreditation Service is one of the signatories to the EA Multilateral Agreement for the recognition of calibration certificates

Accreditation No.: **SCS 108**

Client **Sporton-CN (Auden)**

Certificate No: **EX3-3857_May14**

CALIBRATION CERTIFICATE

Object	EX3DV4 - SN:3857
Calibration procedure(s)	QA CAL-01.v9, QA CAL-14.v4, QA CAL-23.v5, QA CAL-25.v6 Calibration procedure for dosimetric E-field probes
Calibration date:	May 23, 2014

This calibration certificate documents the traceability to national standards, which realize the physical units of measurements (SI).
The measurements and the uncertainties with confidence probability are given on the following pages and are part of the certificate.

All calibrations have been conducted in the closed laboratory facility: environment temperature (22 ± 3)°C and humidity < 70%.

Calibration Equipment used (M&TE critical for calibration)

Primary Standards	ID	Cal Date (Certificate No.)	Scheduled Calibration
Power meter E4419B	GB41293874	03-Apr-14 (No. 217-01911)	Apr-15
Power sensor E4412A	MY41498087	03-Apr-14 (No. 217-01911)	Apr-15
Reference 3 dB Attenuator	SN: S5054 (3c)	03-Apr-14 (No. 217-01915)	Apr-15
Reference 20 dB Attenuator	SN: S5277 (20x)	03-Apr-14 (No. 217-01919)	Apr-15
Reference 30 dB Attenuator	SN: S5129 (30b)	03-Apr-14 (No. 217-01920)	Apr-15
Reference Probe ES3DV2	SN: 3013	30-Dec-13 (No. ES3-3013_Dec13)	Dec-14
DAE4	SN: 660	13-Dec-13 (No. DAE4-660_Dec13)	Dec-14
Secondary Standards	**ID**	**Check Date (in house)**	**Scheduled Check**
RF generator HP 8648C	US3642U01700	4-Aug-99 (in house check Apr-13)	In house check: Apr-16
Network Analyzer HP 8753E	US37390585	18-Oct-01 (in house check Oct-13)	In house check: Oct-14

	Name	Function	Signature
Calibrated by:	Claudio Leubler	Laboratory Technician	
Approved by:	Katja Pokovic	Technical Manager	

Issued: May 23, 2014

This calibration certificate shall not be reproduced except in full without written approval of the laboratory.

Glossary:

TSL	tissue simulating liquid
NORMx,y,z	sensitivity in free space
ConvF	sensitivity in TSL / NORMx,y,z
DCP	diode compression point
CF	crest factor (1/duty_cycle) of the RF signal
A, B, C, D	modulation dependent linearization parameters
Polarization φ	φ rotation around probe axis
Polarization ϑ	ϑ rotation around an axis that is in the plane normal to probe axis (at measurement center), i.e., ϑ = 0 is normal to probe axis
Connector Angle	information used in DASY system to align probe sensor X to the robot coordinate system

Calibration is Performed According to the Following Standards:

a) IEEE Std 1528-2013, "IEEE Recommended Practice for Determining the Peak Spatial-Averaged Specific Absorption Rate (SAR) in the Human Head from Wireless Communications Devices: Measurement Techniques", June 2013
b) IEC 62209-1, "Procedure to measure the Specific Absorption Rate (SAR) for hand-held devices used in close proximity to the ear (frequency range of 300 MHz to 3 GHz)", February 2005

Methods Applied and Interpretation of Parameters:

- *NORMx,y,z:* Assessed for E-field polarization ϑ = 0 (f ≤ 900 MHz in TEM-cell; f > 1800 MHz: R22 waveguide). NORMx,y,z are only intermediate values, i.e., the uncertainties of NORMx,y,z does not affect the E^2-field uncertainty inside TSL (see below *ConvF*).
- *NORM(f)x,y,z = NORMx,y,z * frequency_response* (see Frequency Response Chart). This linearization is implemented in DASY4 software versions later than 4.2. The uncertainty of the frequency response is included in the stated uncertainty of *ConvF*.
- *DCPx,y,z:* DCP are numerical linearization parameters assessed based on the data of power sweep with CW signal (no uncertainty required). DCP does not depend on frequency nor media.
- *PAR:* PAR is the Peak to Average Ratio that is not calibrated but determined based on the signal characteristics
- *Ax,y,z; Bx,y,z; Cx,y,z; Dx,y,z; VRx,y,z: A, B, C, D* are numerical linearization parameters assessed based on the data of power sweep for specific modulation signal. The parameters do not depend on frequency nor media. *VR* is the maximum calibration range expressed in RMS voltage across the diode.
- *ConvF and Boundary Effect Parameters:* Assessed in flat phantom using E-field (or Temperature Transfer Standard for f ≤ 800 MHz) and inside waveguide using analytical field distributions based on power measurements for f > 800 MHz. The same setups are used for assessment of the parameters applied for boundary compensation (alpha, depth) of which typical uncertainty values are given. These parameters are used in DASY4 software to improve probe accuracy close to the boundary. The sensitivity in TSL corresponds to *NORMx,y,z * ConvF* whereby the uncertainty corresponds to that given for *ConvF*. A frequency dependent *ConvF* is used in DASY version 4.4 and higher which allows extending the validity from ± 50 MHz to ± 100 MHz.
- *Spherical isotropy (3D deviation from isotropy)*: in a field of low gradients realized using a flat phantom exposed by a patch antenna.
- *Sensor Offset*: The sensor offset corresponds to the offset of virtual measurement center from the probe tip (on probe axis). No tolerance required.
- *Connector Angle*: The angle is assessed using the information gained by determining the *NORMx* (no uncertainty required).

Probe EX3DV4

SN:3857

Manufactured: January 23, 2012
Calibrated: May 23, 2014

Calibrated for DASY/EASY Systems
(Note: non-compatible with DASY2 system!)

DASY/EASY - Parameters of Probe: EX3DV4 - SN:3857

Basic Calibration Parameters

	Sensor X	Sensor Y	Sensor Z	Unc (k=2)
Norm ($\mu V/(V/m)^2$)[A]	0.18	0.44	0.46	± 10.1 %
DCP (mV)[B]	94.2	98.6	99.4	

Modulation Calibration Parameters

UID	Communication System Name		A dB	B dB√µV	C	D dB	VR mV	Unc[E] (k=2)
0	CW	X	0.0	0.0	1.0	0.00	132.0	±3.8 %
		Y	0.0	0.0	1.0		149.4	
		Z	0.0	0.0	1.0		149.1	

The reported uncertainty of measurement is stated as the standard uncertainty of measurement multiplied by the coverage factor k=2, which for a normal distribution corresponds to a coverage probability of approximately 95%.

[A] The uncertainties of NormX,Y,Z do not affect the E^2-field uncertainty inside TSL (see Pages 5 and 6).
[B] Numerical linearization parameter: uncertainty not required.
[E] Uncertainty is determined using the max. deviation from linear response applying rectangular distribution and is expressed for the square of the field value.

DASY/EASY - Parameters of Probe: EX3DV4 - SN:3857

Calibration Parameter Determined in Head Tissue Simulating Media

f (MHz) [C]	Relative Permittivity [F]	Conductivity (S/m) [F]	ConvF X	ConvF Y	ConvF Z	Alpha [G]	Depth [G] (mm)	Unct. (k=2)
750	41.9	0.89	9.92	9.92	9.92	0.44	0.82	± 12.0 %
835	41.5	0.90	9.41	9.41	9.41	0.30	1.01	± 12.0 %
900	41.5	0.97	9.20	9.20	9.20	0.80	0.50	± 12.0 %
1750	40.1	1.37	8.55	8.55	8.55	0.80	0.59	± 12.0 %
1900	40.0	1.40	8.40	8.40	8.40	0.69	0.65	± 12.0 %
2000	40.0	1.40	8.31	8.31	8.31	0.77	0.56	± 12.0 %
2450	39.2	1.80	7.48	7.48	7.48	0.78	0.58	± 12.0 %
2600	39.0	1.96	7.30	7.30	7.30	0.42	0.87	± 12.0 %
5200	36.0	4.66	5.35	5.35	5.35	0.30	1.80	± 13.1 %
5300	35.9	4.76	5.12	5.12	5.12	0.30	1.80	± 13.1 %
5500	35.6	4.96	4.99	4.99	4.99	0.35	1.80	± 13.1 %
5600	35.5	5.07	4.56	4.56	4.56	0.45	1.80	± 13.1 %
5800	35.3	5.27	4.79	4.79	4.79	0.40	1.80	± 13.1 %

[C] Frequency validity of ± 100 MHz only applies for DASY v4.4 and higher (see Page 2), else it is restricted to ± 50 MHz. Above 5 GHz frequency validity can be extended to ± 110 MHz. The uncertainty is the RSS of the ConvF uncertainty at calibration frequency and the uncertainty for the indicated frequency band.

[F] At frequencies below 3 GHz, the validity of tissue parameters (ε and σ) can be relaxed to ± 10% if liquid compensation formula is applied to measured SAR values. At frequencies above 3 GHz, the validity of tissue parameters (ε and σ) is restricted to ± 5%. The uncertainty is the RSS of the ConvF uncertainty for indicated target tissue parameters.

[G] Alpha/Depth are determined during calibration. SPEAG warrants that the remaining deviation due to the boundary effect after compensation is always less than ± 1% for frequencies below 3 GHz and below ± 2% for frequencies between 3-6 GHz at any distance larger than half the probe tip diameter from the boundary.

DASY/EASY - Parameters of Probe: EX3DV4 - SN:3857

Calibration Parameter Determined in Body Tissue Simulating Media

f (MHz) [C]	Relative Permittivity [F]	Conductivity (S/m) [F]	ConvF X	ConvF Y	ConvF Z	Alpha [G]	Depth [G] (mm)	Unct. (k=2)
750	55.5	0.96	9.46	9.46	9.46	0.47	0.84	± 12.0 %
835	55.2	0.97	9.31	9.31	9.31	0.31	1.06	± 12.0 %
900	55.0	1.05	9.13	9.13	9.13	0.80	0.61	± 12.0 %
1750	53.4	1.49	7.89	7.89	7.89	0.80	0.60	± 12.0 %
1900	53.3	1.52	7.56	7.56	7.56	0.59	0.71	± 12.0 %
2000	53.3	1.52	7.73	7.73	7.73	0.29	1.00	± 12.0 %
2450	52.7	1.95	7.14	7.14	7.14	0.76	0.57	± 12.0 %
2600	52.5	2.16	6.82	6.82	6.82	0.73	0.61	± 12.0 %
5200	49.0	5.30	4.54	4.54	4.54	0.40	1.90	± 13.1 %
5300	48.9	5.42	4.37	4.37	4.37	0.40	1.90	± 13.1 %
5500	48.6	5.65	4.15	4.15	4.15	0.40	1.90	± 13.1 %
5600	48.5	5.77	3.98	3.98	3.98	0.40	1.90	± 13.1 %
5800	48.2	6.00	4.21	4.21	4.21	0.50	1.90	± 13.1 %

[C] Frequency validity of ± 100 MHz only applies for DASY v4.4 and higher (see Page 2), else it is restricted to ± 50 MHz. Above 5 GHz frequency validity can be extended to ± 110 MHz. The uncertainty is the RSS of the ConvF uncertainty at calibration frequency and the uncertainty for the indicated frequency band.

[F] At frequencies below 3 GHz, the validity of tissue parameters (ε and σ) can be relaxed to ± 10% if liquid compensation formula is applied to measured SAR values. At frequencies above 3 GHz, the validity of tissue parameters (ε and σ) is restricted to ± 5%. The uncertainty is the RSS of the ConvF uncertainty for indicated target tissue parameters.

[G] Alpha/Depth are determined during calibration. SPEAG warrants that the remaining deviation due to the boundary effect after compensation is always less than ± 1% for frequencies below 3 GHz and below ± 2% for frequencies between 3-6 GHz at any distance larger than half the probe tip diameter from the boundary.

Frequency Response of E-Field

(TEM-Cell:ifi110 EXX, Waveguide: R22)

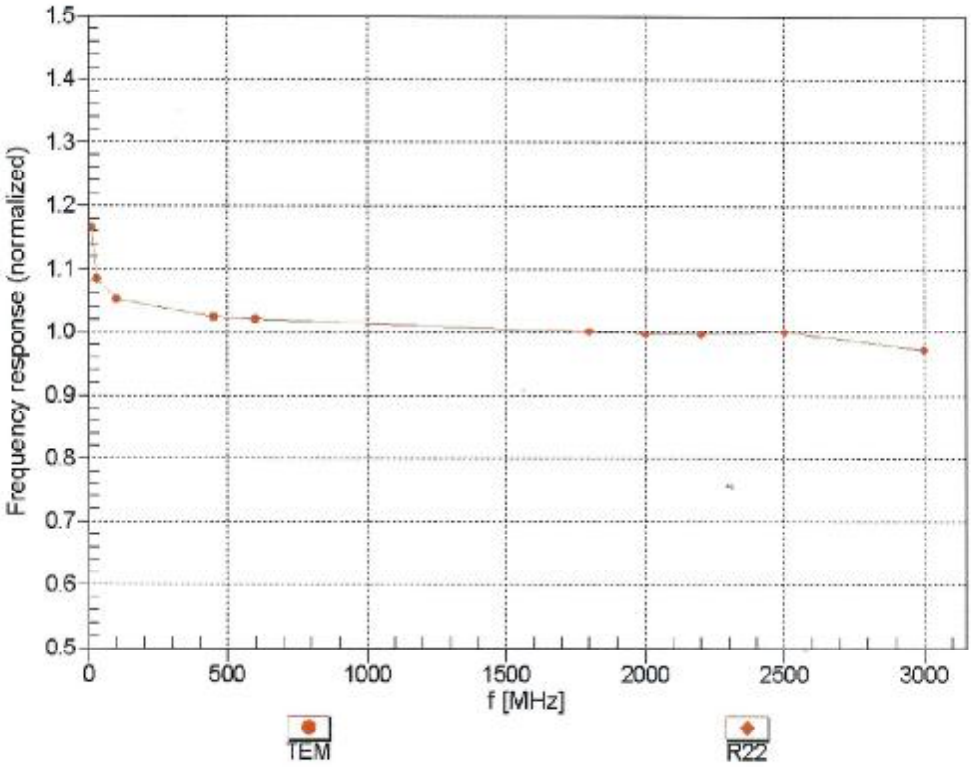

Uncertainty of Frequency Response of E-field: ± 6.3% (k=2)

Receiving Pattern (ϕ), ϑ = 0°

f=600 MHz,TEM

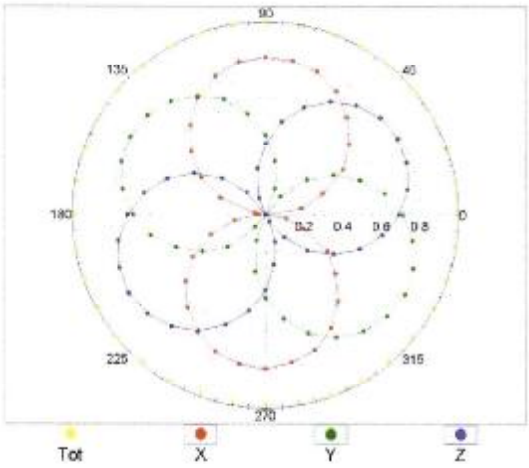

f=1800 MHz,R22

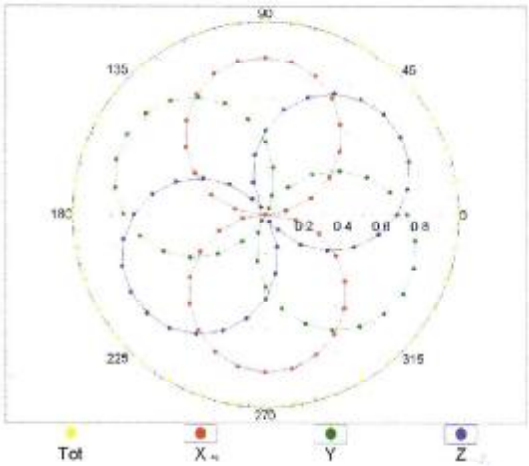

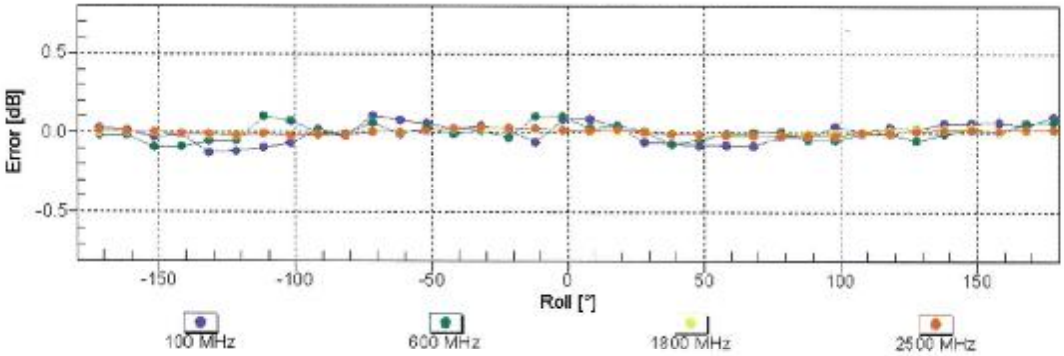

Uncertainty of Axial Isotropy Assessment: ± 0.5% (k=2)

Dynamic Range f(SAR_{head})

(TEM cell , f_{eval}= 1900 MHz)

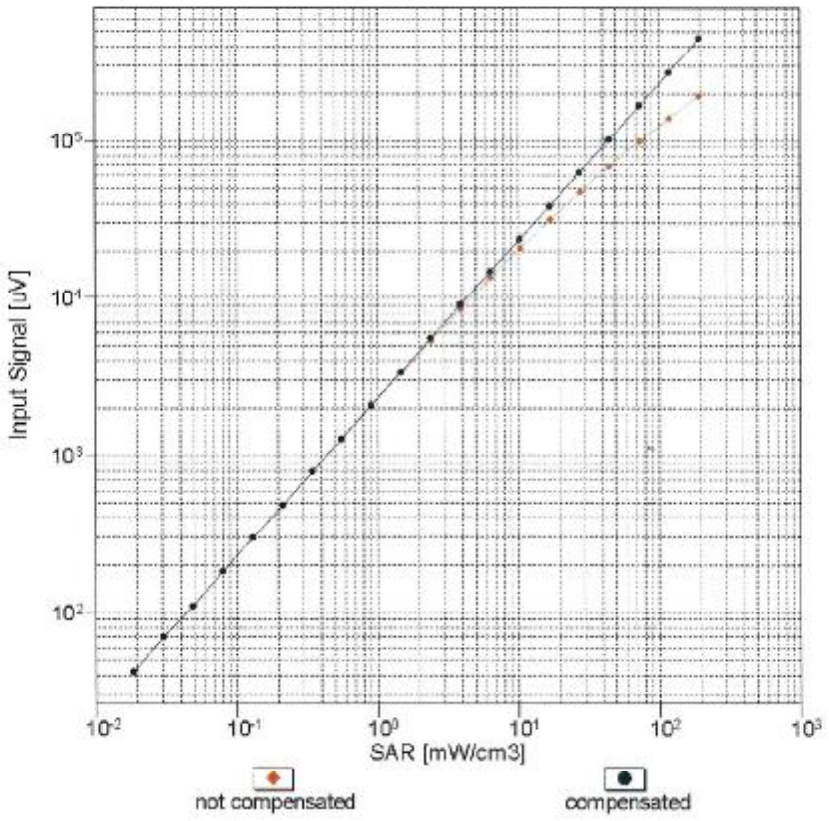

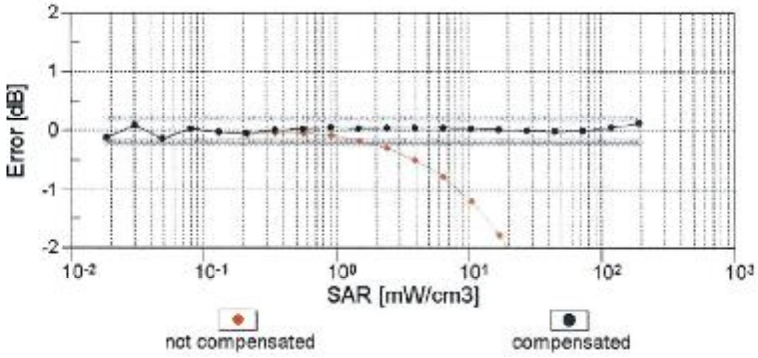

Uncertainty of Linearity Assessment: ± 0.6% (k=2)

Conversion Factor Assessment

f = 900 MHz,WGLS R9 (H_convF)

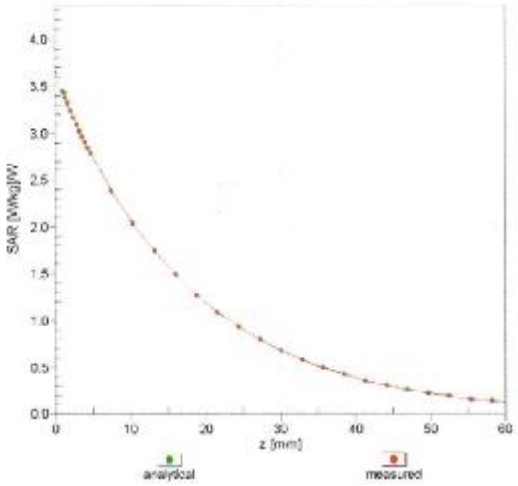

f = 1750 MHz,WGLS R22 (H_convF)

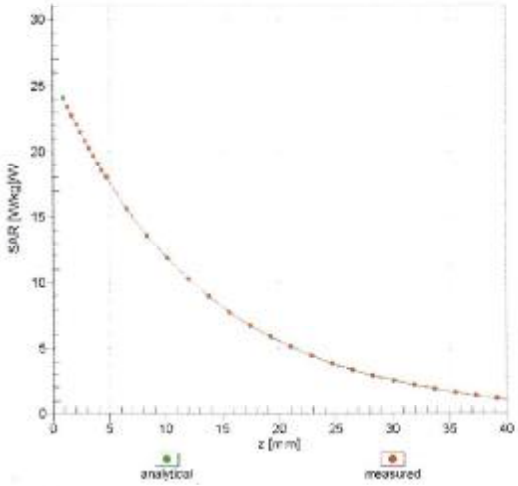

Deviation from Isotropy in Liquid

Error (ϕ, ϑ), f = 900 MHz

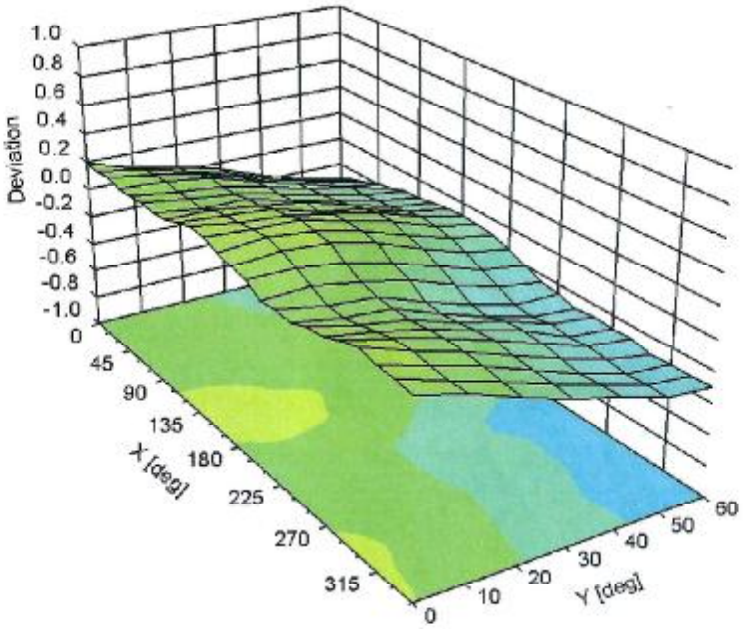

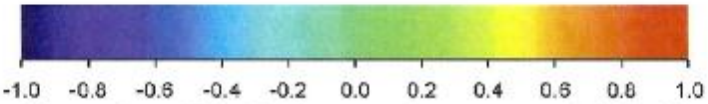

Uncertainty of Spherical Isotropy Assessment: ± 2.6% (k=2)

DASY/EASY - Parameters of Probe: EX3DV4 - SN:3857

Other Probe Parameters

Sensor Arrangement	Triangular
Connector Angle (°)	-41.9
Mechanical Surface Detection Mode	enabled
Optical Surface Detection Mode	disabled
Probe Overall Length	337 mm
Probe Body Diameter	10 mm
Tip Length	9 mm
Tip Diameter	2.5 mm
Probe Tip to Sensor X Calibration Point	1 mm
Probe Tip to Sensor Y Calibration Point	1 mm
Probe Tip to Sensor Z Calibration Point	1 mm
Recommended Measurement Distance from Surface	2 mm