FCC SAR Test Report

APPLICANT	:	Lenovo (Shanghai) Electronics Technology Co., Ltd.
EQUIPMENT	:	Portable Tablet Computer
BRAND NAME	:	lenovo
MODEL NAME	:	YOGA Tablet 2–851F
FCC ID	:	O57YT2851F
STANDARD	:	FCC 47 CFR Part 2 (2.1093) ANSI/IEEE C95.1-1992 IEEE 1528-2003

We, SPORTON INTERNATIONAL (KUNSHAN) INC., would like to declare that the tested sample has been evaluated in accordance with the procedures and had been in compliance with the applicable technical standards.

The test results in this report apply exclusively to the tested model / sample. Without written approval of SPORTON INTERNATIONAL (KUNSHAN) INC., the test report shall not be reproduced except in full.

Reviewed by: Eric Huang / Deputy Manager

Approved by: Jones Tsai / Manager

Testing Laboratory
2627

SPORTON INTERNATIONAL (KUNSHAN) INC.
No. 3-2, PingXiang Road, Kunshan, Jiangsu Province, P.R.C.

Table of Contents

1. Statement of Compliance **4**
2. Administration Data **5**
3. Guidance Standard **5**
4. Equipment Under Test (EUT) **6**
4.1 General Information 6
4.2 Maximum Tune-up Limit 7
5. RF Exposure Limits **8**
5.1 Uncontrolled Environment 8
5.2 Controlled Environment 8
6. Specific Absorption Rate (SAR) **9**
6.1 Introduction 9
6.2 SAR Definition 9
7. System Description and Setup **10**
8. Measurement Procedures **11**
8.1 Spatial Peak SAR Evaluation 11
8.2 Power Reference Measurement 12
8.3 Area Scan 12
8.4 Zoom Scan 13
8.5 Volume Scan Procedures 13
8.6 Power Drift Monitoring 13
9. Test Equipment List **14**
10. System Verification **15**
10.1 Tissue Verification 15
10.2 System Performance Check Results 16
11. RF Exposure Positions **17**
11.1 SAR Testing for Tablet 17
12. Conducted RF Output Power (Unit: dBm) **18**
13. Antenna Location **25**
14. SAR Test Results **27**
14.1 Body SAR 27
14.2 Repeated SAR Measurement 30
15. Simultaneous Transmission Analysis **31**
16. Uncertainty Assessment **32**
17. References **35**
Appendix A. Plots of System Performance Check
Appendix B. Plots of High SAR Measurement
Appendix C. DASY Calibration Certificate
Appendix D. Test Setup Photos

Revision History

REPORT NO.	VERSION	DESCRIPTION	ISSUED DATE
FA462003-03	Rev. 01	Initial issue of report	Aug. 16, 2014

1. Statement of Compliance

The maximum results of Specific Absorption Rate (SAR) found during testing for **Lenovo (Shanghai) Electronics Technology Co., Ltd., Portable Tablet Computer, YOGA Tablet 2–851F** are as follows.

Equipment Class	Frequency Band	Operating Mode	Highest SAR Summary	
			Body 1g SAR (W/kg) (0cm Gap)	Simultaneous Transmission SAR (W/kg)
DTS	WLAN 2.4GHz Band	Data	1.17	
NII	WLAN 5.2GHz Band	Data	1.42	
	WLAN 5.8GHz Band	Data	1.50	
DSS	Bluetooth	Data	<0.10	
Date of Testing:		07/13/2014 ~ 07/21/2014		

This device is in compliance with Specific Absorption Rate (SAR) for general population/uncontrolled exposure limits (1.6 W/kg) specified in FCC 47 CFR part 2 (2.1093) and ANSI/IEEE C95.1-1992, and had been tested in accordance with the measurement methods and procedures specified in IEEE 1528-2003.

2. Administration Data

Testing Laboratory	
Test Site	SPORTON INTERNATIONAL (KUNSHAN) INC.
Test Site Location	No. 3-2, PingXiang Road, Kunshan, Jiangsu Province, P.R.C. TEL: +86-0512-5790-0158 FAX: +86-0512-5790-0958

Applicant	
Company Name	Lenovo (Shanghai) Electronics Technology Co., Ltd.
Address	No. 68 Building, 199 Fenju Road, Wai Gao Qiao FTZ, Shanghai, China

Manufacturer	
Company Name	Lenovo PC HK Limited
Address	23/F, Lincoln House, Taikoo Place 979 King's Road, Quarry Bay, Hong Kong

Factory 1	
Company Name	LENOVO MOBILE COMMUNICATION TECHNOLOGY CO LTD
Address	NO.999 QISHAN NORTH 2ND ROAD, INFORMATION & OPTOELECTRONICS PARK, TORCH HIGH TECH, XIAMEN FUJIAN 361009, CHINA
Factory 2	
Company Name	LENOVO MOBILE COMMUNICATION (WUHAN) CO LTD
Address	19 GAOXIN 4TH RD EAST LAKE HIGH-TECH, ZONE WUHAN HUBEI 430205, CHINA

3. Guidance Standard

The Specific Absorption Rate (SAR) testing specification, method, and procedure for this device is in accordance with the following standards:

- FCC 47 CFR Part 2 (2.1093)
- ANSI/IEEE C95.1-1992
- IEEE 1528-2003
- FCC KDB 865664 D01 SAR Measurement 100 MHz to 6 GHz v01r03
- FCC KDB 865664 D02 SAR Reporting v01r01
- FCC KDB 447498 D01 General RF Exposure Guidance v05r02
- FCC KDB 248227 D01 SAR meas for 802 11abg v01r02
- FCC KDB 616217 D04 SAR for laptop and tablets v01r01

4. Equipment Under Test (EUT)

4.1 General Information

Product Feature & Specification	
Equipment Name	Portable Tablet Computer
Brand Name	lenovo
Model Name	YOGA Tablet 2–851F
FCC ID	O57YT2851F
Wireless Technology and Frequency Range	WLAN 2.4GHz Band: 2412 MHz ~ 2462 MHz WLAN 5.2GHz Band: 5180 MHz ~ 5240 MHz WLAN 5.8GHz Band: 5745 MHz ~ 5825 MHz Bluetooth: 2402 MHz ~ 2480 MHz
Mode	• 802.11a/b/g/n HT20/HT40 • Bluetooth v3.0+EDR，Bluetooth v4.0 LE
HW Version	Lenovopad YOGA Tablet 2-851F
SW Version	Lenovo TAB2-W10-S100-001-140624-ES
EUT Stage	Production Unit

Remark:
1. The above EUT's information was declared by manufacturer. Please refer to the specifications or user's manual for more detailed description.
2. Voice call is not supported.

4.2 Maximum Tune-up Limit

Mode / Band	Average Power (dBm)			
	802.11a	802.11g	802.11n-HT20	802.11n-HT40
WLAN 2.4 GHz Band Ant.0		12	12	10
WLAN 2.4 GHz Band Ant.1		11	11.5	10
WLAN 2.4 GHz Band Ant.0+1(0)			10	5
WLAN 2.4 GHz Band Ant.0+1(1)			10	4.5
WLAN 2.4 GHz Band Ant.0+1			12.5	7.5
WLAN 5.2 GHz Band Ant.0	9		8.5	8.5
WLAN 5.2 GHz Band Ant.1	9.5		9	9
WLAN 5.2 GHz Band Ant. 0+1(0)			6	6
WLAN 5.2 GHz Band Ant. 0+1(1)			6	6
WLAN 5.2 GHz Band Ant. 0+1			9	9
WLAN 5.8 GHz Band Ant.0	11		10.5	10.5
WLAN 5.8 GHz Band Ant.1	11		10.5	10.5
WLAN 5.8 GHz Band Ant. 0+1(0)			8	8
WLAN 5.8 GHz Band Ant. 0+1(1)			8	7.5
WLAN 5.8 GHz Band Ant. 0+1			11	10.5

	Average Power (dBm)		
Mode / Band	802.11b		
Channel	CH 1	CH 6	CH 11
WLAN 2.4 GHz Band Ant.0	16	15.5	15.5
WLAN 2.4 GHz Band Ant.1	14	14	14

Average Power (dBm)		
Mode / Band	Channel	v3.0+EDR
Bluetooth	CH 00	8.5
	CH 39	10
	CH 78	8.5

Average Power (dBm)	
Mode / Band	BT v4.0 LE
Bluetooth	7.5

5. RF Exposure Limits

5.1 Uncontrolled Environment

Uncontrolled Environments are defined as locations where there is the exposure of individuals who have no knowledge or control of their exposure. The general population/uncontrolled exposure limits are applicable to situations in which the general public may be exposed or in which persons who are exposed as a consequence of their employment may not be made fully aware of the potential for exposure or cannot exercise control over their exposure. Members of the general public would come under this category when exposure is not employment-related; for example, in the case of a wireless transmitter that exposes persons in its vicinity.

5.2 Controlled Environment

Controlled Environments are defined as locations where there is exposure that may be incurred by persons who are aware of the potential for exposure, (i.e. as a result of employment or occupation). In general, occupational/controlled exposure limits are applicable to situations in which persons are exposed as a consequence of their employment, who have been made fully aware of the potential for exposure and can exercise control over their exposure. The exposure category is also applicable when the exposure is of a transient nature due to incidental passage through a location where the exposure levels may be higher than the general population/uncontrolled limits, but the exposed person is fully aware of the potential for exposure and can exercise control over his or her exposure by leaving the area or by some other appropriate means.

Limits for Occupational/Controlled Exposure (W/kg)

Whole-Body	Partial-Body	Hands, Wrists, Feet and Ankles
0.4	8.0	20.0

Limits for General Population/Uncontrolled Exposure (W/kg)

Whole-Body	Partial-Body	Hands, Wrists, Feet and Ankles
0.08	1.6	4.0

1. Whole-Body SAR is averaged over the entire body, partial-body SAR is averaged over any 1gram of tissue defined as a tissue volume in the shape of a cube. SAR for hands, wrists, feet and ankles is averaged over any 10 grams of tissue defined as a tissue volume in the shape of a cube.

6. Specific Absorption Rate (SAR)

6.1 Introduction

SAR is related to the rate at which energy is absorbed per unit mass in an object exposed to a radio field. The SAR distribution in a biological body is complicated and is usually carried out by experimental techniques or numerical modeling. The standard recommends limits for two tiers of groups, occupational/controlled and general population/uncontrolled, based on a person's awareness and ability to exercise control over his or her exposure. In general, occupational/controlled exposure limits are higher than the limits for general population/uncontrolled.

6.2 SAR Definition

The SAR definition is the time derivative (rate) of the incremental energy (dW) absorbed by (dissipated in) an incremental mass (dm) contained in a volume element (dv) of a given density (ρ). The equation description is as below:

$$\mathbf{SAR} = \frac{\mathbf{d}}{\mathbf{dt}}\left(\frac{\mathbf{dW}}{\mathbf{dm}}\right) = \frac{\mathbf{d}}{\mathbf{dt}}\left(\frac{\mathbf{dW}}{\boldsymbol{\rho}\mathbf{dv}}\right)$$

SAR is expressed in units of Watts per kilogram (W/kg)

$$\mathbf{SAR} = \frac{\boldsymbol{\sigma}|\mathbf{E}|^{\mathbf{2}}}{\boldsymbol{\rho}}$$

Where: σ is the conductivity of the tissue, ρ is the mass density of the tissue and E is the RMS electrical field strength.

7. System Description and Setup

The DASY system used for performing compliance tests consists of the following items:

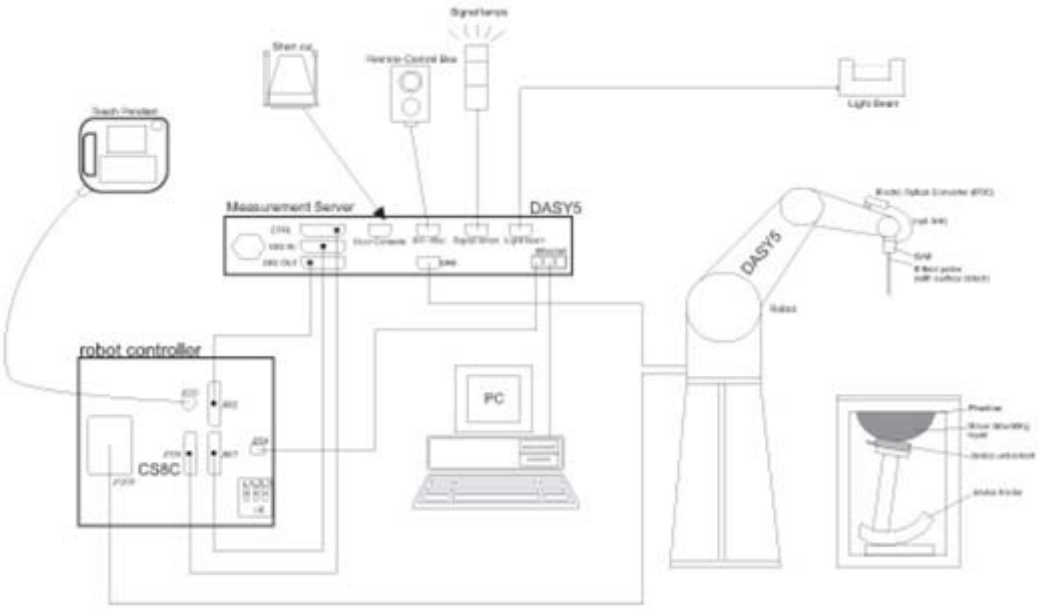

- A standard high precision 6-axis robot with controller, teach pendant and software. An arm extension for accommodating the data acquisition electronics (DAE).
- An isotropic Field probe optimized and calibrated for the targeted measurement.
- A data acquisition electronics (DAE) which performs the signal amplification, signal multiplexing, AD-conversion, offset measurements, mechanical surface detection, collision detection, etc. The unit is battery powered with standard or rechargeable batteries. The signal is optically transmitted to the EOC.
- The Electro-optical converter (EOC) performs the conversion from optical to electrical signals for the digital communication to the DAE. To use optical surface detection, a special version of the EOC is required. The EOC signal is transmitted to the measurement server.
- The function of the measurement server is to perform the time critical tasks such as signal filtering, control of the robot operation and fast movement interrupts.
- The Light Beam used is for probe alignment. This improves the (absolute) accuracy of the probe positioning.
- A computer running WinXP or Win7 and the DASY5 software.
- Remote control and teach pendant as well as additional circuitry for robot safety such as warning lamps, etc.
- The phantom, the device holder and other accessories according to the targeted measurement.

8. Measurement Procedures

The measurement procedures are as follows:

<Conducted power measurement>

(a) For WLAN/BT power measurement, use engineering software to configure EUT WLAN/BT continuously transmission, at maximum RF power in each supported wireless interface and frequency band
(b) Connect EUT RF port through RF cable to the power meter, and measure WLAN/BT output power

<SAR measurement>

(a) Engineering software to configure EUT WLAN/BT continuously transmission, at maximum RF power, in the highest power channel.
(b) Place the EUT in the positions as Appendix D demonstrates.
(c) Set scan area, grid size and other setting on the DASY software.
(d) Measure SAR results for the highest power channel on each testing position.
(e) Find out the largest SAR result on these testing positions of each band
(f) Measure SAR results for other channels in worst SAR testing position if the reported SAR of highest power channel is larger than 0.8 W/kg

According to the test standard, the recommended procedure for assessing the peak spatial-average SAR value consists of the following steps:

(a) Power reference measurement
(b) Area scan
(c) Zoom scan
(d) Power drift measurement

8.1 Spatial Peak SAR Evaluation

The procedure for spatial peak SAR evaluation has been implemented according to the test standard. It can be conducted for 1g and 10g, as well as for user-specific masses. The DASY software includes all numerical procedures necessary to evaluate the spatial peak SAR value.

The base for the evaluation is a "cube" measurement. The measured volume must include the 1g and 10g cubes with the highest averaged SAR values. For that purpose, the center of the measured volume is aligned to the interpolated peak SAR value of a previously performed area scan.

The entire evaluation of the spatial peak values is performed within the post-processing engine (SEMCAD). The system always gives the maximum values for the 1g and 10g cubes. The algorithm to find the cube with highest averaged SAR is divided into the following stages:

(a) Extraction of the measured data (grid and values) from the Zoom Scan
(b) Calculation of the SAR value at every measurement point based on all stored data (A/D values and measurement parameters)
(c) Generation of a high-resolution mesh within the measured volume
(d) Interpolation of all measured values form the measurement grid to the high-resolution grid
(e) Extrapolation of the entire 3-D field distribution to the phantom surface over the distance from sensor to surface
(f) Calculation of the averaged SAR within masses of 1g and 10g

8.2 Power Reference Measurement

The Power Reference Measurement and Power Drift Measurements are for monitoring the power drift of the device under test in the batch process. The minimum distance of probe sensors to surface determines the closest measurement point to phantom surface. This distance cannot be smaller than the distance of sensor calibration points to probe tip as defined in the probe properties.

8.3 Area Scan

The area scan is used as a fast scan in two dimensions to find the area of high field values, before doing a fine measurement around the hot spot. The sophisticated interpolation routines implemented in DASY software can find the maximum found in the scanned area, within a range of the global maximum. The range (in dB0 is specified in the standards for compliance testing. For example, a 2 dB range is required in IEEE standard 1528 and IEC 62209 standards, whereby 3 dB is a requirement when compliance is assessed in accordance with the ARIB standard (Japan), if only one zoom scan follows the area scan, then only the absolute maximum will be taken as reference. For cases where multiple maximums are detected, the number of zoom scans has to be increased accordingly.

Area scan parameters extracted from FCC KDB 865664 D01v01r03 SAR measurement 100 MHz to 6 GHz.

	≤ 3 GHz	> 3 GHz
Maximum distance from closest measurement point (geometric center of probe sensors) to phantom surface	5 ± 1 mm	½·δ·ln(2) ± 0.5 mm
Maximum probe angle from probe axis to phantom surface normal at the measurement location	30° ± 1°	20° ± 1°
Maximum area scan spatial resolution: Δx_{Area}, Δy_{Area}	≤ 2 GHz: ≤ 15 mm 2 – 3 GHz: ≤ 12 mm	3 – 4 GHz: ≤ 12 mm 4 – 6 GHz: ≤ 10 mm
	When the x or y dimension of the test device, in the measurement plane orientation, is smaller than the above, the measurement resolution must be ≤ the corresponding x or y dimension of the test device with at least one measurement point on the test device.	

8.4 Zoom Scan

Zoom scans are used assess the peak spatial SAR values within a cubic averaging volume containing 1 gram and 10 gram of simulated tissue. The zoom scan measures points (refer to table below) within a cube shoes base faces are centered on the maxima found in a preceding area scan job within the same procedure. When the measurement is done, the zoom scan evaluates the averaged SAR for 1 gram and 10 gram and displays these values next to the job's label.

Zoom scan parameters extracted from FCC KDB 865664 D01v01r03 SAR measurement 100 MHz to 6 GHz.

			≤ 3 GHz	> 3 GHz
Maximum zoom scan spatial resolution: Δx_{Zoom}, Δy_{Zoom}			≤ 2 GHz: ≤ 8 mm 2 – 3 GHz: ≤ 5 mm*	3 – 4 GHz: ≤ 5 mm* 4 – 6 GHz: ≤ 4 mm*
Maximum zoom scan spatial resolution, normal to phantom surface	uniform grid: $\Delta z_{Zoom}(n)$		≤ 5 mm	3 – 4 GHz: ≤ 4 mm 4 – 5 GHz: ≤ 3 mm 5 – 6 GHz: ≤ 2 mm
	graded grid	$\Delta z_{Zoom}(1)$: between 1st two points closest to phantom surface	≤ 4 mm	3 – 4 GHz: ≤ 3 mm 4 – 5 GHz: ≤ 2.5 mm 5 – 6 GHz: ≤ 2 mm
		$\Delta z_{Zoom}(n>1)$: between subsequent points	$\leq 1.5 \cdot \Delta z_{Zoom}(n-1)$	
Minimum zoom scan volume	x, y, z		≥ 30 mm	3 – 4 GHz: ≥ 28 mm 4 – 5 GHz: ≥ 25 mm 5 – 6 GHz: ≥ 22 mm

Note: δ is the penetration depth of a plane-wave at normal incidence to the tissue medium; see draft standard IEEE P1528-2011 for details.

* When zoom scan is required and the *reported* SAR from the *area scan based 1-g SAR estimation* procedures of KDB 447498 is ≤ 1.4 W/kg, ≤ 8 mm, ≤ 7 mm and ≤ 5 mm zoom scan resolution may be applied, respectively, for 2 GHz to 3 GHz, 3 GHz to 4 GHz and 4 GHz to 6 GHz.

8.5 Volume Scan Procedures

The volume scan is used for assess overlapping SAR distributions for antennas transmitting in different frequency bands. It is equivalent to an oversized zoom scan used in standalone measurements. The measurement volume will be used to enclose all the simultaneous transmitting antennas. For antennas transmitting simultaneously in different frequency bands, the volume scan is measured separately in each frequency band. In order to sum correctly to compute the 1g aggregate SAR, the EUT remain in the same test position for all measurements and all volume scan use the same spatial resolution and grid spacing. When all volume scan were completed, the software, SEMCAD postprocessor can combine and subsequently superpose these measurement data to calculating the multiband SAR.

8.6 Power Drift Monitoring

All SAR testing is under the EUT install full charged battery and transmit maximum output power. In DASY measurement software, the power reference measurement and power drift measurement procedures are used for monitoring the power drift of EUT during SAR test. Both these procedures measure the field at a specified reference position before and after the SAR testing. The software will calculate the field difference in dB. If the power drifts more than 5%, the SAR will be retested.

9. Test Equipment List

Manufacturer	Name of Equipment	Type/Model	Serial Number	Calibration	
				Last Cal.	Due Date
SPEAG	2450MHz System Validation Kit	D2450V2	908	Mar. 26. 2013	Mar. 24. 2015
SPEAG	2450MHz System Validation Kit	D2450V2	736	Aug. 23, 2013	Aug. 22, 2014
SPEAG	5000MHz System Validation Kit	D5000V2	1006	Sep. 23, 2013	Sep. 22, 2014
SPEAG	Data Acquisition Electronics	DAE4	1358	Apr. 30, 2014	Apr. 29, 2015
SPEAG	Data Acquisition Electronics	DAE4	1210	May 19, 2014	May 18, 2015
SPEAG	Dosimetric E-Field Probe	EX3DV4	3911	Apr. 22, 2014	Apr. 21, 2015
SPEAG	Dosimetric E-Field Probe	EX3DV4	3857	May 23, 2014	May 22, 2015
SPEAG	ELI5 Phantom	QD OVA 002 AA	TP-1201	NCR	NCR
SPEAG	ELI4 Phantom	QD OVA 001 BB	TP-1079	NCR	NCR
SPEAG	Phone Positioner	N/A	N/A	NCR	NCR
Agilent	ENA Series Network Analyzer	E5071C	MY46111157	May 04, 2014	May 03, 2015
Agilent	Dielectric Probe Kit	85070E	MY44300475	NCR	NCR
Agilent	Signal Generator	N5181A	MY50145381	Jan. 04, 2014	Jan. 03, 2015
Anritsu	Power Senor	MA2411B	0917070	Feb. 27, 2014	Feb. 26, 2015
Anritsu	Power Meter	ML2495A	1005002	Feb. 27, 2014	Feb. 26, 2015
R&S	CBT BLUETOOTH TESTER	CBT	100783	Aug. 13, 2013	Aug. 12, 2014
R&S	Spectrum Analyzer	FSP7	101045	Dec. 30, 2013	Dec. 29, 2014
Agilent	Dual Directional Coupler	778D	50422	Note 1	
Woken	Attenuator	WK0602-XX	N/A	Note 1	
PE	Attenuator	PE7005-10	N/A	Note 1	
PE	Attenuator	PE7005- 3	N/A	Note 1	
AR	Power Amplifier	5S1G4M2	0328767	Note 1	
Mini-Circuits	Power Amplifier	ZVE-3W	162601250	Note 1	
Mini-Circuits	Power Amplifier	ZHL-42W+	13440021344	Note 1	

General Note:

1. Prior to system verification and validation, the path loss from the signal generator to the system check source and the power meter, which includes the amplifier, cable, attenuator and directional coupler, was measured by the network analyzer. The reading of the power meter was offset by the path loss difference between the path to the power meter and the path to the system check source to monitor the actual power level fed to the system check source.
2. Referring to KDB 865664 D01v01r03, the dipole calibration interval can be extended to 3 years with justification. The dipoles are also not physically damaged, or repaired during the interval.
3. The justification data of dipole D2450V2, SN: 908 can be found in appendix C. The return loss is < -20dB, within 20% of prior calibration, the impedance is within 5 ohm of prior calibration.

10. System Verification

10.1 Tissue Verification

The following tissue formulations are provided for reference only as some of the parameters have not been thoroughly verified. The composition of ingredients may be modified accordingly to achieve the desired target tissue parameters required for routine SAR evaluation.

Frequency (MHz)	Water (%)	Sugar (%)	Cellulose (%)	Salt (%)	Preventol (%)	DGBE (%)	Conductivity (σ)	Permittivity (εr)
For Body								
2450	68.6	0	0	0	0	31.4	1.95	52.7

Simulating Liquid for 5GHz, Manufactured by SPEAG

Ingredients	(% by weight)
Water	64~78%
Mineral oil	11~18%
Emulsifiers	9~15%
Additives and Salt	2~3%

<Tissue Dielectric Parameter Check Results>

Frequency (MHz)	Tissue Type	Liquid Temp. (℃)	Conductivity (σ)	Permittivity (ε_r)	Conductivity Target (σ)	Permittivity Target (ε_r)	Delta (σ) (%)	Delta (ε_r) (%)	Limit (%)	Date
2450	Body	22.7	1.983	51.159	1.95	52.70	1.69	-2.92	±5	2014.7.17
2450	Body	22.4	1.942	50.952	1.95	52.70	-0.41	-3.32	±5	2014.7.21
5200	Body	22.5	5.138	47.493	5.30	49.00	-3.06	-3.08	±5	2014.7.13
5800	Body	22.6	6.127	47.784	6.00	48.20	2.12	-0.86	±5	2014.7.15

10.2 System Performance Check Results

Comparing to the original SAR value provided by SPEAG, the verification data should be within its specification of 10 %. Below table shows the target SAR and measured SAR after normalized to 1W input power. The table below indicates the system performance check can meet the variation criterion and the plots can be referred to Appendix A of this report.

Date	Frequency (MHz)	Tissue Type	Input Power (mW)	Dipole S/N	Probe S/N	DAE S/N	Measured SAR (W/kg)	Targeted SAR (W/kg)	Normalized SAR (W/kg)	Deviation (%)
2014.7.17	2450	Body	250	908	3911	1358	13.60	50.40	54.4	7.94
2014.7.21	2450	Body	250	736	3857	1210	12.70	51.30	50.8	-0.97
2014.7.13	5200	Body	100	1006	3857	1210	7.23	71.50	72.3	1.12
2014.7.15	5800	Body	100	1006	3857	1210	7.23	72.30	72.3	0.00

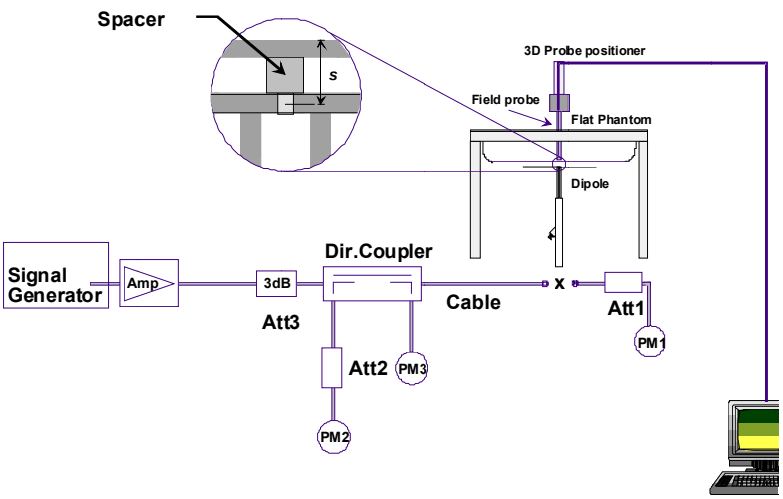

Fig 8.3.1 System Performance Check Setup

Fig 8.3.2 Setup Photo

11. RF Exposure Positions

11.1 SAR Testing for Tablet

This device can be used also in full sized tablet exposure conditions, due to its size. Per FCC KDB 616217, the back surface and edges of the tablet should be tested for SAR compliance with the tablet touching the phantom. The SAR exclusion threshold in KDB 447498 D01v05r02 can be applied to determine SAR test exclusion for adjacent edge configurations. The closest distance from the antenna to an adjacent tablet edge is used to determine if SAR testing is required for the adjacent edges, with the adjacent edge positioned against the phantom and the edge containing the antenna positioned perpendicular to the phantom.

12. Conducted RF Output Power (Unit: dBm)

<WLAN Conducted Power>

General Note:

1. Per KDB 248227, SAR for MIMO was measured with both transmitting simultaneously and was evaluated in dependently of SISO operation. For 2.4/5.2/5.8GHz MIMO, 802.11n was evaluated.
2. For SAR testing was performed on single antenna RF power in SISO mode is larger or equal to the single antenna RF power in MIMO mode, and for RF exposure assessment of MIMO mode simultaneous transmission exclusion analysis was performed with SAR test results of each antenna in SISO mode.
3. For IEEE802.11b/g SAR testing, highest average RF output power channel for the lowest data rate for 802.11b were selected for SAR evaluation. 802.11g were not investigated since the average output powers over all channels and data rates were not more than 0.25 dB higher than the tested channel in the lowest data rate of 802.11b mode.
4. For IEEE802.11n, SAR testing can be conducted on channel with the highest output power when taking into consideration tune-up tolerance for same test configuration that was identified during SAR evaluations for IEEE802.11b/g (as applicable) provided bandwidth and test position are the same.
5. For IEEE802.11n with multiple channel BW configurations, highest channel BW configuration with highest output power limit shall be tested.
6. Testing of lower BW configurations is not required when the maximum average output of the default test channels in each lower BW configuration is less than 1/4dB higher than the default test channel in the highest BW configuration.

<2.4GHz WLAN Antenna 0>

WLAN 2.4GHz 802.11b Average Power (dBm)					
Power vs. Channel			Power vs. Data Rate		
Channel	Frequency (MHz)	Data Rate 1Mbps	2Mbps	5.5Mbps	11Mbps
CH 1	2412	**15.70**	15.54	15.57	15.55
CH 6	2437	14.98			
CH 11	2462	14.89			

WLAN 2.4GHz 802.11g Average Power (dBm)									
Power vs. Channel			Power vs. Data Rate						
Channel	Frequency (MHz)	Data Rate 6Mbps	9Mbps	12Mbps	18Mbps	24Mbps	36Mbps	48Mbps	54Mbps
CH 1	2412	**11.11**	10.84	10.62	10.71	10.71	10.81	10.80	10.77
CH 6	2437	10.47							
CH 11	2462	10.23							

WLAN 2.4GHz 802.11n-HT20 Average Power (dBm)									
Power vs. Channel			Power vs. MCS Index						
Channel	Frequency (MHz)	MCS Index MCS0	MCS1	MCS2	MCS3	MCS4	MCS5	MCS6	MCS7
CH 1	2412	**11.37**	11.29	11.29	11.23	11.30	11.32	11.29	10.96
CH 6	2437	11.21							
CH 11	2462	11.23							

WLAN 2.4GHz 802.11n-HT40 Average Power (dBm)									
Power vs. Channel			Power vs. MCS Index						
Channel	Frequency (MHz)	MCS Index MCS0	MCS1	MCS2	MCS3	MCS4	MCS5	MCS6	MCS7
CH 3	2422	8.82	9.30	9.25	9.14	9.26	9.30	9.32	8.99
CH 6	2437	8.78							
CH 9	2452	**9.40**							

<2.4GHz WLAN Antenna 1>

WLAN 2.4GHz 802.11b Average Power (dBm)					
Power vs. Channel			Power vs. Data Rate		
Channel	Frequency (MHz)	Data Rate 1Mbps	2Mbps	5.5Mbps	11Mbps
CH 1	2412	**13.47**	13.45	13.44	13.46
CH 6	2437	13.24			
CH 11	2462	12.92			

WLAN 2.4GHz 802.11g Average Power (dBm)									
Power vs. Channel			Power vs. Data Rate						
Channel	Frequency (MHz)	Data Rate 6Mbps	9Mbps	12Mbps	18Mbps	24Mbps	36Mbps	48Mbps	54Mbps
CH 1	2412	**10.78**	10.68	10.65	10.65	10.66	10.73	10.74	10.68
CH 6	2437	10.45							
CH 11	2462	10.37							

WLAN 2.4GHz 802.11n-HT20 Average Power (dBm)									
Power vs. Channel			Power vs. MCS Index						
Channel	Frequency (MHz)	MCS Index MCS0	MCS1	MCS2	MCS3	MCS4	MCS5	MCS6	MCS7
CH 1	2412	**11.19**	11.03	10.98	10.94	10.94	10.91	10.87	10.84
CH 6	2437	10.96							
CH 11	2462	10.90							

WLAN 2.4GHz 802.11n-HT40 Average Power (dBm)									
Power vs. Channel			Power vs. MCS Index						
Channel	Frequency (MHz)	MCS Index MCS0	MCS1	MCS2	MCS3	MCS4	MCS5	MCS6	MCS7
CH 3	2422	9.27	9.80	9.69	9.58	9.84	9.70	9.67	9.66
CH 6	2437	8.98							
CH 9	2452	**9.91**							

<2.4GHz WLAN Antenna 0+1(0)>

WLAN 2.4GHz 802.11n-HT20 Average Power (dBm)									
Power vs. Channel			Power vs. MCS Index						
Channel	Frequency (MHz)	MCS Index MCS8	MCS9	MCS10	MCS11	MCS12	MCS13	MCS14	MCS15
CH 1	2412	**9.32**	8.91	9.11	9.02	9.10	9.14	9.05	9.05
CH 6	2437	9.12							
CH 11	2462	9.14							

WLAN 2.4GHz 802.11n-HT40 Average Power (dBm)									
Power vs. Channel			Power vs. MCS Index						
Channel	Frequency (MHz)	MCS Index MCS8	MCS9	MCS10	MCS11	MCS12	MCS13	MCS14	MCS15
CH 3	2422	4.20	2.54	4.58	2.33	1.81	2.60	2.23	2.14
CH 6	2437	4.44							
CH 9	2452	**4.63**							

<2.4GHz WLAN Antenna 0+1(1)>

WLAN 2.4GHz 802.11n-HT20 Average Power (dBm)									
Power vs. Channel			Power vs. MCS Index						
Channel	Frequency (MHz)	MCS Index MCS8	MCS9	MCS10	MCS11	MCS12	MCS13	MCS14	MCS15
CH 1	2412	**9.09**	8.82	9.15	8.92	8.99	9.09	9.12	9.08
CH 6	2437	8.96							
CH 11	2462	9.04							

WLAN 2.4GHz 802.11n-HT40 Average Power (dBm)									
Power vs. Channel			Power vs. MCS Index						
Channel	Frequency (MHz)	MCS Index MCS8	MCS9	MCS10	MCS11	MCS12	MCS13	MCS14	MCS15
CH 3	2422	4.00	4.20	4.23	4.07	3.90	4.03	3.78	3.54
CH 6	2437	3.97							
CH 9	2452	**4.17**							

<2.4GHz WLAN Antenna 0+1>

WLAN 2.4GHz 802.11n-HT20 Average Power (dBm)									
Power vs. Channel			Power vs. MCS Index						
Channel	Frequency (MHz)	MCS Index MCS8	MCS9	MCS10	MCS11	MCS12	MCS13	MCS14	MCS15
CH 1	2412	**12.21**	11.88	12.14	11.98	12.06	12.12	12.09	12.08
CH 6	2437	12.05							
CH 11	2462	12.10							

WLAN 2.4GHz 802.11n-HT40 Average Power (dBm)									
Power vs. Channel			Power vs. MCS Index						
Channel	Frequency (MHz)	MCS Index MCS8	MCS9	MCS10	MCS11	MCS12	MCS13	MCS14	MCS15
CH 3	2422	7.11	6.46	**7.42**	6.29	5.99	6.38	6.08	5.91
CH 6	2437	7.22							
CH 9	2452	**7.42**							

<5GHz WLAN Antenna 0>

WLAN 5GHz 802.11a Average Power (dBm)									
Power vs. Channel			Power vs. Data Rate						
Channel	Frequency (MHz)	Data Rate	9Mbps	12Mbps	18Mbps	24Mbps	36Mbps	48Mbps	54Mbps
		6Mbps							
CH 36	5180	8.02	8.16	8.17	8.19	8.27	8.29	8.27	8.21
CH 40	5200	7.97							
CH 44	5220	8.25							
CH 48	5240	**8.62**							
CH 149	5745	10.68	10.76	10.76	10.65	10.68	10.79	10.76	10.71
CH 153	5765	10.69							
CH 157	5785	10.70							
CH 161	5805	10.72							
CH 165	5825	**10.81**							

WLAN 5GHz 802.11n-HT20 Average Power (dBm)									
Power vs. Channel			Power vs. MCS Index						
Channel	Frequency (MHz)	MCS Index	MCS1	MCS2	MCS3	MCS4	MCS5	MCS6	MCS7
		MCS0							
CH 36	5180	7.79	7.91	7.81	7.74	7.86	8.00	7.90	7.90
CH 40	5200	7.90							
CH 44	5220	7.96							
CH 48	5240	**8.01**							
CH 149	5745	**10.40**	10.36	10.30	10.28	10.39	10.37	10.31	10.17
CH 153	5765	10.32							
CH 157	5785	10.29							
CH 161	5805	10.37							
CH 165	5825	10.30							

WLAN 5GHz 802.11n-HT40 Average Power (dBm)									
Power vs. Channel			Power vs. MCS Index						
Channel	Frequency (MHz)	MCS Index	MCS1	MCS2	MCS3	MCS4	MCS5	MCS6	MCS7
		MCS0							
CH 38	5190	8.03	8.10	7.90	7.94	8.05	8.03	7.89	7.92
CH 46	5230	**8.25**							
CH 151	5755	9.91	10.06	9.99	9.95	9.99	10.11	10.16	9.93
CH 159	5795	**10.19**							

<5GHz WLAN Antenna 1>

WLAN 5GHz 802.11a Average Power (dBm)									
Power vs. Channel			Power vs. Data Rate						
Channel	Frequency (MHz)	Data Rate 6Mbps	9Mbps	12Mbps	18Mbps	24Mbps	36Mbps	48Mbps	54Mbps
CH 36	5180	8.66	9.05	8.86	8.71	8.84	9.05	9.09	8.62
CH 40	5200	8.74							
CH 44	5220	8.80							
CH 48	5240	**9.10**							
CH 149	5745	10.52	10.73	10.56	10.55	10.63	10.66	10.61	10.49
CH 153	5765	10.61							
CH 157	5785	**10.87**							
CH 161	5805	10.52							
CH 165	5825	10.47							

WLAN 5GHz 802.11n-HT20 Average Power (dBm)									
Power vs. Channel			Power vs. MCS Index						
Channel	Frequency (MHz)	MCS Index MCS0	MCS1	MCS2	MCS3	MCS4	MCS5	MCS6	MCS7
CH 36	5180	8.15	8.12	8.20	8.18	8.33	8.43	8.31	8.04
CH 40	5200	8.18							
CH 44	5220	8.08							
CH 48	5240	**8.47**							
CH 149	5745	9.65	10.02	9.89	9.78	9.80	9.96	9.78	9.53
CH 153	5765	9.71							
CH 157	5785	**10.18**							
CH 161	5805	9.56							
CH 165	5825	9.54							

WLAN 5GHz 802.11n-HT40 Average Power (dBm)									
Power vs. Channel			Power vs. MCS Index						
Channel	Frequency (MHz)	MCS Index MCS0	MCS1	MCS2	MCS3	MCS4	MCS5	MCS6	MCS7
CH 38	5190	**8.54**	8.36	8.40	8.22	8.16	8.23	8.19	7.72
CH 46	5230	8.42							
CH 151	5755	**10.08**	9.91	9.79	9.75	9.85	9.96	9.84	9.72
CH 159	5795	9.96							

<5GHz WLAN Antenna 0+1(0)>

WLAN 5GHz 802.11n-HT20 Average Power (dBm)									
Power vs. Channel			Power vs. Data Rate						
Channel	Frequency (MHz)	Data Rate	MCS9	MCS10	MCS11	MCS12	MCS13	MCS14	MCS15
		MCS8							
CH 36	5180	5.00	5.09	4.96	5.01	5.20	5.21	5.23	5.13
CH 40	5200	5.04							
CH 44	5220	5.17							
CH 48	5240	**5.48**							
CH 149	5745	7.73	7.82	7.76	7.54	7.77	7.79	7.80	7.64
CH 153	5765	7.75							
CH 157	5785	7.78							
CH 161	5805	7.81							
CH 165	5825	**7.91**							

WLAN 5GHz 802.11n-HT40 Average Power (dBm)									
Power vs. Channel			Power vs. MCS Index						
Channel	Frequency (MHz)	MCS Index	MCS9	MCS10	MCS11	MCS12	MCS13	MCS14	MCS15
		MCS8							
CH 38	5190	**5.56**	5.20	4.89	4.80	4.92	4.84	4.88	4.73
CH 46	5230	4.94							
CH 151	5755	6.85	7.09	6.67	6.68	6.45	6.46	6.47	6.32
CH 159	5795	**7.40**							

<5GHz WLAN Antenna 0+1(1)>

WLAN 5GHz 802.11n-HT20 Average Power (dBm)									
Power vs. Channel			Power vs. MCS Index						
Channel	Frequency (MHz)	MCS Index	MCS9	MCS10	MCS11	MCS12	MCS13	MCS14	MCS15
		MCS8							
CH 36	5180	5.28	5.34	5.19	5.15	5.35	5.31	5.39	5.16
CH 40	5200	5.22							
CH 44	5220	5.13							
CH 48	5240	**5.65**							
CH 149	5745	7.11	6.55	6.67	6.43	6.52	6.45	6.76	6.32
CH 153	5765	7.13							
CH 157	5785	7.08							
CH 161	5805	7.06							
CH 165	5825	**7.15**							

WLAN 5GHz 802.11n-HT40 Average Power (dBm)									
Power vs. Channel			Power vs. MCS Index						
Channel	Frequency (MHz)	MCS Index	MCS9	MCS10	MCS11	MCS12	MCS13	MCS14	MCS15
		MCS8							
CH 38	5190	**5.64**	5.10	5.03	5.05	5.12	5.13	5.12	5.03
CH 46	5230	4.96							
CH 151	5755	7.03	7.04	6.82	6.71	6.68	6.63	6.62	6.32
CH 159	5795	**7.21**							

<5GHz WLAN Antenna 0+1>

WLAN 5GHz 802.11n-HT20 Average Power (dBm)									
Power vs. Channel			Power vs. MCS Index						
Channel	Frequency (MHz)	MCS Index MCS8	MCS9	MCS10	MCS11	MCS12	MCS13	MCS14	MCS15
CH 36	5180	8.15	8.23	8.08	8.09	8.29	8.28	8.32	8.15
CH 40	5200	8.14							
CH 44	5220	8.16							
CH 48	5240	**8.58**							
CH 149	5745	10.44	10.24	10.26	10.03	10.20	10.19	10.32	10.04
CH 153	5765	10.46							
CH 157	5785	10.45							
CH 161	5805	10.51							
CH 165	5825	**10.56**							

WLAN 5GHz 802.11n-HT40 Average Power (dBm)									
Power vs. Channel			Power vs. MCS Index						
Channel	Frequency (MHz)	MCS Index MCS8	MCS9	MCS10	MCS11	MCS12	MCS13	MCS14	MCS15
CH 38	5190	**8.61**	8.16	7.97	7.94	8.03	8.00	8.01	7.89
CH 46	5230	7.96							
CH 151	5755	9.95	10.07	9.76	9.71	9.58	9.56	9.56	9.33
CH 159	5795	**10.32**							

<Bluetooth Conducted Power>

Bluetooth Burst Average Power (dBm)_DH5				
Channel	Frequency (MHz)	Data Rate		
		1Mbps	2Mbps	3Mbps
CH 00	2402	7.05	5.33	5.32
CH 39	2441	**9.65**	6.95	6.94
CH 78	2480	7.90	4.65	4.63

Channel	Frequency (MHz)	Burst Average power (dBm)
		BT v4.0, GFSK
CH 00	2402	5.2
CH 19	2440	**7.21**
CH 39	2480	5.15

Note:

1. The burst average power is the average power level during the "ON" burst of Bluetooth transmitter
2. Bluetooth SAR testing was performed at the data rate of 1Mbps and at DH5 due to highest duty factor which is theoretically maximum 83.3%.

13. Antenna Location

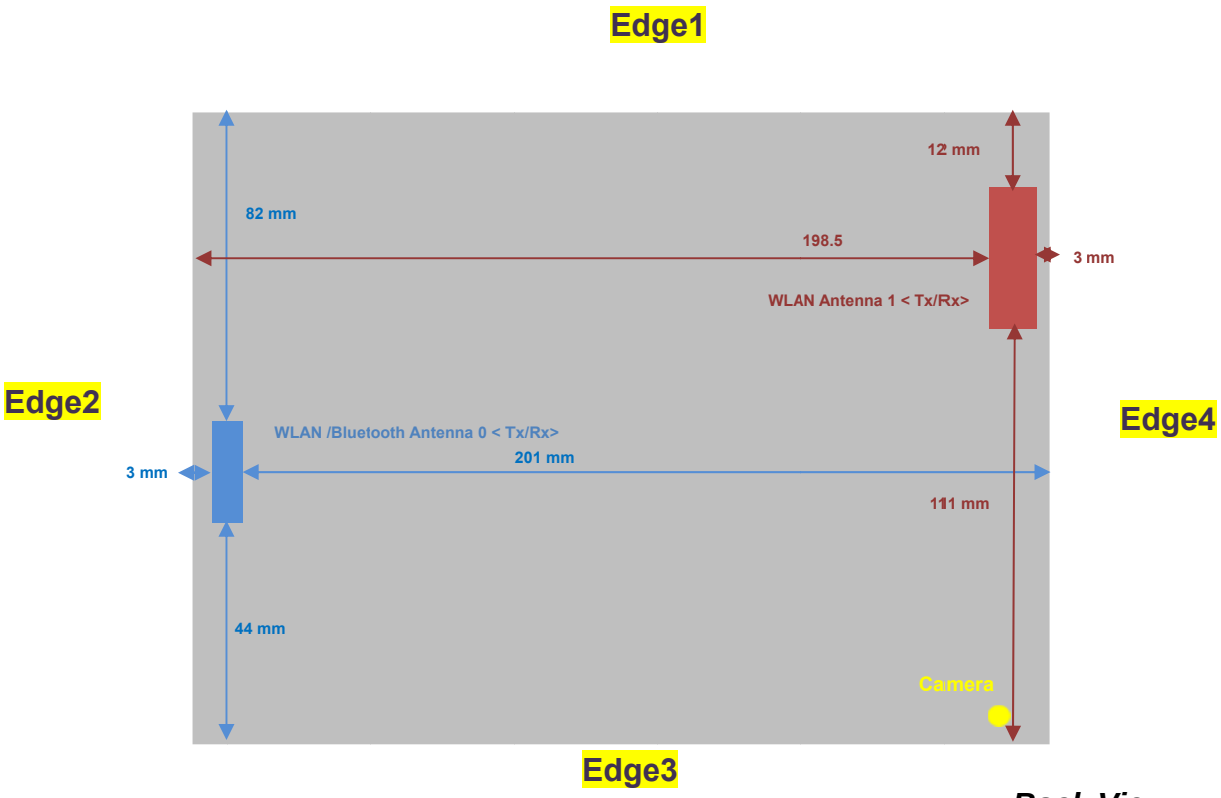

Back View

<Transmission configuration>

Wireless Interface	SISO Mode		MIMO Mode
	Antenna 0 <Tx/Rx>	Antenna 1 <Tx/Rx>	Antenna 0+1 <Tx/Rx>
WLAN 2.4GHz 802.11b/g	yes	yes	
WLAN 2.4GHz 802.11n HT20/ HT40	yes	yes	yes
WLAN 5GHz 802.11a	yes	yes	
WLAN 5GHz 802.11n HT20/ HT40	yes	yes	yes
Bluetooth	yes		

General Note:

1. The below table, when the distance is < 50 mm exclusion threshold is "Ratio", when the distance is > 50 mm exclusion threshold is "mW".
2. Maximum power is the source-based time-average power and represents the maximum RF output power among production units
3. Per KDB 447498 D01v05r02, for larger devices, the test separation distance of adjacent edge configuration is determined by the closest separation between the antenna and the user.
4. Per KDB 447498 D01v05r02, standalone SAR test exclusion threshold is applied; If the test separation distance is < 5mm, 5mm is used to determine SAR exclusion threshold.
5. Per KDB 447498 D01v05r02, at 100 MHz to 6 GHz and for *test separation distances* > 50 mm, the SAR test exclusion threshold is determined according to the following
   a) [Threshold at 50 mm in step 1) + (test separation distance - 50 mm)·(f(MHz)/150)] mW, at 100 MHz to 1500 MHz
   b) [Threshold at 50 mm in step 1) + (test separation distance - 50 mm)·10] mW at > 1500 MHz and ≤ 6 GHz

SAR test exclusion table distance is ≤ 50mm

Exposure Position	Wireless Interface	802.11b Ant.0	802.11b Ant.1	802.11a WLAN5.2G Ant.0	802.11a WLAN5.2G Ant.1	802.11a WLAN5.8G Ant.0	802.11a WLAN5.8G Ant.1	Bluetooth
	Tune-up Maximum power (dBm)	16	14	9	9.5	11	11	10
Bottom Face	Antenna to user (mm)	5.00	5.00	5.00	5.00	5.00	5.00	5.00
	SAR exclusion threshold	13	8	4	4	6	6	3.4
	SAR testing required?	**Yes**	**Yes**	**Yes**	**Yes**	**Yes**	**Yes**	**Yes**
Edge 1	Antenna to user (mm)		12.00		12.00		12.00	
	SAR exclusion threshold		3		2		3	
	SAR testing required?		No		No		No	
Edge 2	Antenna to user (mm)	3.00		3.00		3.00		3.00
	SAR exclusion threshold (mW)	13		4		6		3.4
	SAR testing required?	**Yes**		**Yes**		**Yes**		**Yes**
Edge 3	Antenna to user (mm)	44.00		44.00		44.00		44.00
	SAR exclusion threshold (mW)	1		0.4		1		0.4
	SAR testing required?	**No**		**No**		**No**		**No**
Edge 4	Antenna to user (mm)		3.00		3.00		3.00	
	SAR exclusion threshold (mW)		8		4		6	
	SAR testing required?		**Yes**		**Yes**		**Yes**	

SAR test exclusion table distance is > 50mm

Exposure Position	Wireless Interface	802.11b Ant.0	802.11b Ant.1	802.11a WLAN5.2G Ant.0	802.11a WLAN5.2G Ant.1	802.11a WLAN5.8G Ant.0	802.11a WLAN5.8G Ant.1	Bluetooth
	Tune-up Maximum power (dBm)	16	14	9	9.5	11	11	10
	Tune-up Maximum rated power (mW)	40	25	8	9	13	13	10
Edge 1	Antenna to user (mm)	82.00		82.00		82.00		82.00
	SAR exclusion threshold	416		386		382		415
	SAR testing required?	**No**		**No**		**No**		**No**
Edge 2	Antenna to user (mm)		198.50		198.50		198.50	
	SAR exclusion threshold (mW)		1581		1551		1547	
	SAR testing required?		**No**		**No**		**No**	
Edge 3	Antenna to user (mm)		111.00		111.00		111.00	
	SAR exclusion threshold (mW)		706		676		672	
	SAR testing required?		**No**		**No**		**No**	
Edge 4	Antenna to user (mm)	201.00		201.00		201.00		201.00
	SAR exclusion threshold (mW)	1606		1576		1572		1605
	SAR testing required?	**No**		**No**		**No**		**No**

14. SAR Test Results

General Note:

1. Per KDB 447498 D01v05r02, the reported SAR is the measured SAR value adjusted for maximum tune-up tolerance.
   a. Tune-up scaling Factor = tune-up limit power (mW) / EUT RF power (mW), where tune-up limit is the maximum rated power among all production units.
   b. For SAR testing of WLAN signal with non-100% duty cycle, the measured SAR is scaled-up by the duty cycle scaling factor which is equal to "1/(duty cycle)"
   c. For WLAN: Reported SAR(W/kg)= Measured SAR(W/kg)* Duty Cycle scaling factor * Tune-up scaling factor
2. Per KDB 447498 D01v05r02, for each exposure position, testing of other required channels within the operating mode of a frequency band is not required when the *reported* 1-g or 10-g SAR for the mid-band or highest output power channel is:
   - ≤ 0.8 W/kg or 2.0 W/kg, for 1-g or 10-g respectively, when the transmission band is ≤ 100 MHz
   - ≤ 0.6 W/kg or 1.5 W/kg, for 1-g or 10-g respectively, when the transmission band is between 100 MHz and 200 MHz
   - ≤ 0.4 W/kg or 1.0 W/kg, for 1-g or 10-g respectively, when the transmission band is ≥ 200 MHz

14.1 Body SAR

<DTS WLAN SAR>

Plot No.	Band	Mode	Test Position	Gap (cm)	Antenna	Ch.	Freq. (MHz)	Average Power (dBm)	Tune-Up Limit (dBm)	Scaling Factor	Duty Cycle %	Duty Cycle Scaling Factor	Power Drift (dB)	Measured 1g SAR (W/kg)	Reported 1g SAR (W/kg)
	WLAN 2.4GHz	802.11b 1Mbps	Bottom Face	0	Ant 0	1	2412	15.70	16.00	1.072	100	1.00	0.01	1.050	1.125
	WLAN 2.4GHz	802.11b 1Mbps	Edge 2	0	Ant 0	1	2412	15.70	16.00	1.072	100	1.00	-0.01	0.672	0.720
	WLAN 2.4GHz	802.11b 1Mbps	Bottom Face	0	Ant 0	6	2437	14.98	15.50	1.127	100	1.00	0.08	0.842	0.949
01	**WLAN 2.4GHz**	**802.11b 1Mbps**	**Bottom Face**	**0**	**Ant 0**	**11**	**2462**	**14.89**	**15.50**	**1.151**	**100**	**1.00**	**0.04**	**1.020**	**1.174**
	WLAN 2.4GHz	802.11n-HT40 MCS0	Bottom Face	0	Ant 0	9	2452	9.40	10.00	1.148	95.07	1.052	-0.02	0.259	0.313
	WLAN 2.4GHz	802.11n-HT20 MCS0	Bottom Face	0	Ant 0	1	2412	11.37	12.00	1.156	95.08	1.052	0.06	0.426	0.518
02	**WLAN 2.4GHz**	**802.11b 1Mbps**	**Bottom Face**	**0**	**Ant 1**	**1**	**2412**	**13.47**	**14.00**	**1.130**	**100**	**1.00**	**0.09**	**0.440**	**0.497**
	WLAN 2.4GHz	802.11b 1Mbps	Edge 4	0	Ant 1	1	2412	13.47	14.00	1.130	100	1.00	0.08	0.154	0.174
	WLAN 2.4GHz	802.11b 1Mbps	Bottom Face	0	Ant 1	6	2437	13.24	14.00	1.191	100	1.00	-0.05	0.278	0.331
	WLAN 2.4GHz	802.11b 1Mbps	Bottom Face	0	Ant 1	11	2462	12.92	14.00	1.282	100	1.00	0.07	0.236	0.303
	WLAN 2.4GHz	802.11n-HT40 MCS0	Bottom Face	0	Ant 1	9	2452	9.91	10.00	1.021	94.88	1.054	0.04	0.156	0.168
	WLAN 2.4GHz	802.11n-HT20 MCS0	Bottom Face	0	Ant 1	1	2412	11.19	11.50	1.074	95.08	1.052	-0.01	0.329	0.372
	WLAN 2.4GHz	802.11n-HT20 MCS8	Bottom Face	0	Ant 0+1	1	2412	12.21	12.50	1.069	90.88	1.100	0.04	0.266	0.313
	WLAN 2.4GHz	802.11n-HT20 MCS8	Edge 2	0	Ant 0+1	1	2412	12.21	12.50	1.069	90.88	1.100	-0.09	0.153	0.180
	WLAN 2.4GHz	802.11n-HT20 MCS8	Edge4	0	Ant 0+1	1	2412	12.21	12.50	1.069	90.88	1.100	-0.06	0.039	0.046
03	**WLAN 2.4GHz**	**802.11n-HT20 MCS8**	**Bottom Face**	**0**	**Ant 0+1**	**6**	**2437**	**12.05**	**12.50**	**1.109**	**90.88**	**1.100**	**0.07**	**0.267**	**0.326**
	WLAN 2.4GHz	802.11n-HT20 MCS8	Bottom Face	0	Ant 0+1	11	2462	12.10	12.50	1.096	90.88	1.100	-0.08	0.245	0.296
	WLAN 2.4GHz	802.11n-HT40 MCS8	Bottom Face	0	Ant 0+1	9	2452	7.42	7.50	1.019	90.63	1.103	0.05	0.108	0.121

<UNII WLAN SAR>

Plot No.	Band	Mode	Test Position	Gap (cm)	Antenna	Ch.	Freq. (MHz)	Average Power (dBm)	Tune-Up Limit (dBm)	Scaling Factor	Duty Cycle %	Duty Cycle Scaling Factor	Power Drift (dB)	Measured 1g SAR (W/kg)	Reported 1g SAR (W/kg)
	WLAN 5.2GHz	802.11a 6Mbps	Bottom Face	0	Ant.0	48	2412	8.62	9	1.091	95.83	1.044	0.05	0.520	0.593
	WLAN 5.2GHz	802.11a 6Mbps	Edge2	0	Ant.0	48	2412	8.62	9	1.091	95.83	1.044	-0.1	0.877	0.999
04	**WLAN 5.2GHz**	**802.11a 6Mbps**	**Edge2**	**0**	**Ant.0**	**36**	**2437**	**8.02**	**9**	**1.253**	**95.83**	**1.044**	**-0.11**	**1.000**	**1.308**
	WLAN 5.2GHz	802.11n-HT40_MCS0	Edge2	0	Ant.0	46	2462	8.25	8.5	1.059	95.13	1.051	-0.07	0.833	0.927
	WLAN 5.2GHz	802.11n-HT40_MCS0	Edge2	0	Ant.0	38	2412	8.03	8.5	1.114	95.13	1.051	-0.03	0.957	1.121
	WLAN 5.2GHz	802.11a 6Mbps	Bottom Face	0	Ant.1	48	5240	9.1	9.5	1.096	95.48	1.047	-0.05	0.721	0.828
	WLAN 5.2GHz	802.11a 6Mbps	Edge4	0	Ant.1	48	5240	9.1	9.5	1.096	95.48	1.047	0.1	0.891	1.023
	WLAN 5.2GHz	802.11a 6Mbps	Bottom Face	0	Ant.1	36	5180	8.66	9.5	1.213	95.48	1.047	-0.15	0.777	0.987
05	**WLAN 5.2GHz**	**802.11a 6Mbps**	**Edge4**	**0**	**Ant.1**	**36**	**5180**	**8.66**	**9.5**	**1.213**	**95.48**	**1.047**	**-0.01**	**1.120**	**1.423**
	WLAN 5.2GHz	802.11n-HT40_MCS0	Edge4	0	Ant.1	38	5190	8.54	9	1.112	94.7	1.056	0.05	0.910	1.068
	WLAN 5.2GHz	802.11n-HT40_MCS0	Edge4	0	Ant.1	46	5230	8.42	9	1.143	94.7	1.056	-0.03	0.844	1.019
	WLAN 5.2GHz	802.11n-HT20_MCS8	Bottom Face	0	Ant.0+1	48	5240	8.58	9	1.102	90.98	1.099	0.09	0.23	0.278
	WLAN 5.2GHz	802.11n-HT20_MCS8	Edge2	0	Ant.0+1	48	5240	8.58	9	1.102	90.98	1.099	-0.08	0.413	0.500
	WLAN 5.2GHz	802.11n-HT20_MCS8	Edge4	0	Ant.0+1	48	5240	8.58	9	1.102	90.98	1.099	0.1	0.413	0.500
06	**WLAN 5.2GHz**	**802.11n-HT20_MCS8**	**Edge4**	**0**	**Ant.0+1**	**36**	**5180**	**8.15**	**9**	**1.216**	**90.98**	**1.099**	**-0.11**	**0.452**	**0.604**
	WLAN 5.2GHz	802.11n-HT40_MCS8	Edge4	0	Ant.0+1	38	5190	8.61	9	1.094	90.13	1.110	-0.15	0.236	0.287

Plot No.	Band	Mode	Test Position	Gap (cm)	Antenna	Ch.	Freq. (MHz)	Average Power (dBm)	Tune-Up Limit (dBm)	Scaling Factor	Duty Cycle %	Duty Cycle Scaling Factor	Power Drift (dB)	Measured 1g SAR (W/kg)	Reported 1g SAR (W/kg)
	WLAN 5.8GHz	802.11a 6Mbps	Bottom Face	0	Ant.0	165	5825	10.81	11	1.045	95.83	1.044	-0.05	0.179	0.195
	WLAN 5.8GHz	802.11a 6Mbps	Edge2	0	Ant.0	165	5825	10.81	11	1.045	95.83	1.044	-0.14	0.424	0.462
07	**WLAN 5.8GHz**	**802.11n-HT40_MCS0**	**Edge2**	**0**	**Ant.0**	**159**	**5795**	**10.19**	**10.5**	**1.074**	**95.13**	**1.051**	**-0.09**	**0.457**	**0.516**
	WLAN 5.8GHz	802.11n-HT40_MCS0	Edge2	0	Ant.0	151	5755	9.91	10.5	1.146	95.13	1.051	-0.01	0.211	0.254
	WLAN 5.8GHz	802.11a 6Mbps	Bottom Face	0	Ant.1	157	5785	10.87	11	1.030	95.48	1.047	-0.1	1.150	1.241
	WLAN 5.8GHz	802.11a 6Mbps	Edge4	0	Ant.1	157	5785	10.87	11	1.030	95.48	1.047	0.05	0.991	1.069
	WLAN 5.8GHz	802.11a 6Mbps	Bottom Face	0	Ant.1	149	5745	10.52	11	1.117	95.48	1.047	0.1	1.160	1.356
08	**WLAN 5.8GHz**	**802.11a 6Mbps**	**Bottom Face**	**0**	**Ant.1**	**165**	**5825**	**10.47**	**11**	**1.130**	**95.48**	**1.047**	**-0.06**	**1.270**	**1.502**
	WLAN 5.8GHz	802.11a 6Mbps	Edge4	0	Ant.1	149	5745	10.52	11	1.117	95.48	1.047	0.14	1.020	1.193
	WLAN 5.8GHz	802.11a 6Mbps	Edge4	0	Ant.1	165	5825	10.47	11	1.130	95.48	1.047	0.15	1.010	1.195
	WLAN 5.8GHz	802.11n-HT40_MCS0	Bottom Face	0	Ant.1	151	5755	10.08	10.5	1.102	94.7	1.056	-0.06	0.859	0.999
	WLAN 5.8GHz	802.11n-HT40_MCS0	Bottom Face	0	Ant.1	159	5755	9.96	10.5	1.132	94.7	1.056	0.08	0.904	1.081
	WLAN 5.8GHz	802.11n-HT20_MCS8	Bottom Face	0	Ant.0+1	165	5825	10.56	11	1.107	90.98	1.099	-0.12	0.897	1.091
	WLAN 5.8GHz	802.11n-HT20_MCS8	Edge2	0	Ant.0+1	165	5825	10.56	11	1.107	90.98	1.099	-0.06	0.304	0.370
	WLAN 5.8GHz	802.11n-HT20_MCS8	Edge4	0	Ant.0+1	165	5825	10.56	11	1.107	90.98	1.099	0.05	0.718	0.873
09	**WLAN 5.8GHz**	**802.11n-HT20_MCS8**	**Bottom Face**	**0**	**Ant.0+1**	**149**	**5745**	**10.44**	**11**	**1.138**	**90.98**	**1.099**	**-0.04**	**0.918**	**1.148**
	WLAN 5.8GHz	802.11n-HT20_MCS8	Bottom Face	0	Ant.0+1	157	5785	10.45	11	1.135	90.98	1.099	-0.09	0.892	1.113
	WLAN 5.8GHz	802.11n-HT20_MCS8	Edge4	0	Ant.0+1	149	5745	10.44	11	1.138	90.98	1.099	0.1	0.777	0.971
	WLAN 5.8GHz	802.11n-HT20_MCS8	Edge4	0	Ant.0+1	157	5785	10.45	11	1.135	90.98	1.099	-0.01	0.741	0.924
	WLAN 5.8GHz	802.11n-HT40_MCS8	Bottom Face	0	Ant.0+1	159	5795	10.32	10.5	1.042	90.13	1.110	-0.07	0.612	0.708
	WLAN 5.8GHz	802.11n-HT40_MCS8	Bottom Face	0	Ant.0+1	151	5755	9.95	10.5	1.135	90.13	1.110	0.1	0.570	0.718

<Bluetooth SAR>

Plot No.	Band	Mode	Test Position	Gap (cm)	Ch.	Freq. (MHz)	Average Power (dBm)	Tune-Up Limit (dBm)	Tune-up Scaling Factor	Power Drift (dB)	Measured 1g SAR (W/kg)	Reported 1g SAR (W/kg)
	Bluetooth	1Mbps DH5	Bottom Face	0	39	2441	9.65	10	1.084	0.01	0.00014	<0.010
	Bluetooth	1Mbps DH5	Edge2	0	39	2441	9.65	10	1.084	-0.03	4.42E-05	<0.010
	Bluetooth	1Mbps DH5	Bottom Face	0	00	2402	7.05	8.5	1.396	-0.05	0.000113	<0.010
10	**Bluetooth**	**1Mbps DH5**	**Bottom Face**	**0**	**78**	**2480**	**7.9**	**8.5**	**1.148**	**-0.05**	**0.000165**	**<0.010**

14.2 Repeated SAR Measurement

No.	Band	Mode	Test Position	Gap (cm)	Antenna	Ch.	Freq. (MHz)	Average Power (dBm)	Tune-Up Limit (dBm)	Scaling Factor	Duty Cycle %	Duty Cycle Scaling Factor	Power Drift (dB)	Measured 1g SAR (W/kg)	**Ratio**	Reported 1g SAR (W/kg)
1st	WLAN 2.4GHz	802.11b 1Mbps	Bottom Face	0	Ant 0	1	2412	15.70	16.00	1.072	-	-	0.01	1.05	1	1.125
2nd	WLAN 2.4GHz	802.11b 1Mbps	Bottom Face	0	Ant 0	1	2412	15.70	16.00	1.072	-	-	0.08	1.03	1.019	1.104
1st	WLAN 5.2GHz	802.11a 6Mbps	Edge4	0	Ant.1	36	5180	8.66	9.5	1.213	95.48	1.047	-0.01	1.12	1	1.423
2nd	WLAN 5.2GHz	802.11a 6Mbps	Edge4	0	Ant.1	36	5180	8.66	9.5	1.213	95.48	1.047	-0.12	1.08	1.036	1.372
1st	WLAN 5.8GHz	802.11a 6Mbps	Bottom Face	0	Ant.1	165	5825	10.47	11	1.130	95.48	1.047	-0.06	1.27	1	1.502
2nd	WLAN 5.8GHz	802.11a 6Mbps	Bottom Face	0	Ant.1	165	5825	10.47	11	1.130	95.48	1.047	-0.04	1.23	1.031	1.455

General Note:

1. Per KDB 865664 D01v01r03, for each frequency band, repeated SAR measurement is required only when the measured SAR is ≥0.8W/kg
2. Per KDB 865664 D01v01r03, if the ratio among the repeated measurement is ≤ 1.2 and the measured SAR <1.45W/kg, only one repeated measurement is required.
3. The ratio is the difference in percentage between original and repeated *measured SAR*.
4. All measurement SAR result is scaled-up to account for tune-up tolerance and is compliant.

15. Simultaneous Transmission Analysis

No.	Applicable Simultaneous Transmission Combination
1.	None

General Note: WLAN and Bluetooth share the same antenna, and cannot transmit simultaneously.

Test Engineer：Fulu Hu

16. Uncertainty Assessment

The component of uncertainly may generally be categorized according to the methods used to evaluate them. The evaluation of uncertainly by the statistical analysis of a series of observations is termed a Type An evaluation of uncertainty. The evaluation of uncertainty by means other than the statistical analysis of a series of observation is termed a Type B evaluation of uncertainty. Each component of uncertainty, however evaluated, is represented by an estimated standard deviation, termed standard uncertainty, which is determined by the positive square root of the estimated variance.

A Type A evaluation of standard uncertainty may be based on any valid statistical method for treating data. This includes calculating the standard deviation of the mean of a series of independent observations; using the method of least squares to fit a curve to the data in order to estimate the parameter of the curve and their standard deviations; or carrying out an analysis of variance in order to identify and quantify random effects in certain kinds of measurement.

A type B evaluation of standard uncertainty is typically based on scientific judgment using all of the relevant information available. These may include previous measurement data, experience, and knowledge of the behavior and properties of relevant materials and instruments, manufacture's specification, data provided in calibration reports and uncertainties assigned to reference data taken from handbooks. Broadly speaking, the uncertainty is either obtained from an outdoor source or obtained from an assumed distribution, such as the normal distribution, rectangular or triangular distributions indicated in table below.

Uncertainty Distributions	Normal	Rectangular	Triangular	U-Shape
Multi-plying Factor[(a)]	1/k[(b)]	1/√3	1/√6	1/√2

(a) standard uncertainty is determined as the product of the multiplying factor and the estimated range of variations in the measured quantity

(b) κ is the coverage factor

Table 14.1. Standard Uncertainty for Assumed Distribution

The combined standard uncertainty of the measurement result represents the estimated standard deviation of the result. It is obtained by combining the individual standard uncertainties of both Type A and Type B evaluation using the usual "root-sum-squares" (RSS) methods of combining standard deviations by taking the positive square root of the estimated variances.

Expanded uncertainty is a measure of uncertainty that defines an interval about the measurement result within which the measured value is confidently believed to lie. It is obtained by multiplying the combined standard uncertainty by a coverage factor. Typically, the coverage factor ranges from 2 to 3. Using a coverage factor allows the true value of a measured quantity to be specified with a defined probability within the specified uncertainty range. For purpose of this document, a coverage factor two is used, which corresponds to confidence interval of about 95 %. The DASY uncertainty Budget is shown in the following tables.

Error Description	Uncertainty Value (±%)	Probability Distribution	Divisor	Ci (1g)	Ci (10g)	Standard Uncertainty (1g)	Standard Uncertainty (10g)
Measurement System							
Probe Calibration	6.0	Normal	1	1	1	± 6.0 %	± 6.0 %
Axial Isotropy	4.7	Rectangular	√3	0.7	0.7	± 1.9 %	± 1.9 %
Hemispherical Isotropy	9.6	Rectangular	√3	0.7	0.7	± 3.9 %	± 3.9 %
Boundary Effects	1.0	Rectangular	√3	1	1	± 0.6 %	± 0.6 %
Linearity	4.7	Rectangular	√3	1	1	± 2.7 %	± 2.7 %
System Detection Limits	1.0	Rectangular	√3	1	1	± 0.6 %	± 0.6 %
Readout Electronics	0.3	Normal	1	1	1	± 0.3 %	± 0.3 %
Response Time	0.8	Rectangular	√3	1	1	± 0.5 %	± 0.5 %
Integration Time	2.6	Rectangular	√3	1	1	± 1.5 %	± 1.5 %
RF Ambient Noise	3.0	Rectangular	√3	1	1	± 1.7 %	± 1.7 %
RF Ambient Reflections	3.0	Rectangular	√3	1	1	± 1.7 %	± 1.7 %
Probe Positioner	0.4	Rectangular	√3	1	1	± 0.2 %	± 0.2 %
Probe Positioning	2.9	Rectangular	√3	1	1	± 1.7 %	± 1.7 %
Max. SAR Eval.	1.0	Rectangular	√3	1	1	± 0.6 %	± 0.6 %
Test Sample Related							
Device Positioning	2.9	Normal	1	1	1	± 2.9 %	± 2.9 %
Device Holder	3.6	Normal	1	1	1	± 3.6 %	± 3.6 %
Power Drift	5.0	Rectangular	√3	1	1	± 2.9 %	± 2.9 %
Phantom and Setup							
Phantom Uncertainty	4.0	Rectangular	√3	1	1	± 2.3 %	± 2.3 %
Liquid Conductivity (Target)	5.0	Rectangular	√3	0.64	0.43	± 1.8 %	± 1.2 %
Liquid Conductivity (Meas.)	2.5	Normal	1	0.64	0.43	± 1.6 %	± 1.1 %
Liquid Permittivity (Target)	5.0	Rectangular	√3	0.6	0.49	± 1.7 %	± 1.4 %
Liquid Permittivity (Meas.)	2.5	Normal	1	0.6	0.49	± 1.5 %	± 1.2 %
Combined Standard Uncertainty						± 11.0 %	± 10.8 %
Coverage Factor for 95 %						K=2	
Expanded Uncertainty						**± 22.0 %**	**± 21.5 %**

Table 14.2. Uncertainty Budget for frequency range 300 MHz to 3 GHz

Error Description	Uncertainty Value (±%)	Probability Distribution	Divisor	Ci (1g)	Ci (10g)	Standard Uncertainty (1g)	Standard Uncertainty (10g)
Measurement System							
Probe Calibration	6.55	Normal	1	1	1	± 6.55 %	± 6.55 %
Axial Isotropy	4.7	Rectangular	√3	0.7	0.7	± 1.9 %	± 1.9 %
Hemispherical Isotropy	9.6	Rectangular	√3	0.7	0.7	± 3.9 %	± 3.9 %
Boundary Effects	2.0	Rectangular	√3	1	1	± 1.2 %	± 1.2 %
Linearity	4.7	Rectangular	√3	1	1	± 2.7 %	± 2.7 %
System Detection Limits	1.0	Rectangular	√3	1	1	± 0.6 %	± 0.6 %
Readout Electronics	0.3	Normal	1	1	1	± 0.3 %	± 0.3 %
Response Time	0.8	Rectangular	√3	1	1	± 0.5 %	± 0.5 %
Integration Time	2.6	Rectangular	√3	1	1	± 1.5 %	± 1.5 %
RF Ambient Noise	3.0	Rectangular	√3	1	1	± 1.7 %	± 1.7 %
RF Ambient Reflections	3.0	Rectangular	√3	1	1	± 1.7 %	± 1.7 %
Probe Positioner	0.8	Rectangular	√3	1	1	± 0.5 %	± 0.5 %
Probe Positioning	9.9	Rectangular	√3	1	1	± 5.7 %	± 5.7 %
Max. SAR Eval.	4.0	Rectangular	√3	1	1	± 2.3 %	± 2.3 %
Test Sample Related							
Device Positioning	2.9	Normal	1	1	1	± 2.9 %	± 2.9 %
Device Holder	3.6	Normal	1	1	1	± 3.6 %	± 3.6 %
Power Drift	5.0	Rectangular	√3	1	1	± 2.9 %	± 2.9 %
Phantom and Setup							
Phantom Uncertainty	4.0	Rectangular	√3	1	1	± 2.3 %	± 2.3 %
Liquid Conductivity (Target)	5.0	Rectangular	√3	0.64	0.43	± 1.8 %	± 1.2 %
Liquid Conductivity (Meas.)	2.5	Normal	1	0.64	0.43	± 1.6 %	± 1.1 %
Liquid Permittivity (Target)	5.0	Rectangular	√3	0.6	0.49	± 1.7 %	± 1.4 %
Liquid Permittivity (Meas.)	2.5	Normal	1	0.6	0.49	± 1.5 %	± 1.2 %
Combined Standard Uncertainty						± 12.8 %	± 12.6 %
Coverage Factor for 95 %						K=2	
Expanded Uncertainty						**± 25.6 %**	**± 25.2 %**

Table 14.3. Uncertainty Budget for frequency range 3 GHz to 6 GHz

17. References

[1] FCC 47 CFR Part 2 “Frequency Allocations and Radio Treaty Matters; General Rules and Regulations”

[2] ANSI/IEEE Std. C95.1-1992, “IEEE Standard for Safety Levels with Respect to Human Exposure to Radio Frequency Electromagnetic Fields, 3 kHz to 300 GHz”, September 1992

[3] IEEE Std. 1528-2003, “Recommended Practice for Determining the Peak Spatial-Average Specific Absorption Rate (SAR) in the Human Head from Wireless Communications Devices: Measurement Techniques”, December 2003

[4] SPEAG DASY System Handbook

[5] FCC KDB 248227 D01 v01r02, “SAR Measurement Procedures for 802.11 a/b/g Transmitters”, May 2007

[6] FCC KDB 447498 D01 v05r02, “Mobile and Portable Device RF Exposure Procedures and Equipment Authorization Policies”, Feb 2014

[7] FCC KDB 616217 D04 v01r01, “SAR Evaluation Considerations for Laptop, Notebook, Netbook and Tablet Computers”, May 2013

[8] FCC KDB 865664 D01 v01r03, "SAR Measurement Requirements for 100 MHz to 6 GHz", Feb 2014.

[9] FCC KDB 865664 D02 v01r01, “RF Exposure Compliance Reporting and Documentation Considerations” May 2013.

Appendix A. Plots of System Performance Check

The plots are shown as follows.

Test Laboratory: Sporton International Inc. SAR/HAC Testing Lab Date: 2014/7/17

System Check_Body_2450MHz_140717

DUT: D2450V2 - SN: 908

Communication System: CW; Frequency: 2450 MHz;Duty Cycle: 1:1
Medium: MSL_2450_140717 Medium parameters used: f = 2450 MHz; σ = 1.983 S/m; ε_r = 51.159; ρ = 1000 kg/m^3
Ambient Temperature：23.5 ℃; Liquid Temperature ：22.7 ℃

DASY5 Configuration:
- Probe: EX3DV4 - SN3911; ConvF(7.32, 7.32, 7.32); Calibrated: 2014/4/22;
- Sensor-Surface: 2mm (Mechanical Surface Detection)
- Electronics: DAE4 Sn1358; Calibrated: 2014/4/30
- Phantom: ELI v5.0; Type: QDOVA002AA; Serial: TP:1201
- Measurement SW: DASY52, Version 52.8 (5); SEMCAD X Version 14.6.8 (7028)

Pin=250mW/Area Scan (81x81x1): Interpolated grid: dx=12mm, dy=12mm
Maximum value of SAR (interpolated) = 20.4 W/kg

Pin=250mW/Zoom Scan (7x7x7)/Cube 0: Measurement grid: dx=5mm, dy=5mm, dz=5mm
Reference Value = 88.996 V/m; Power Drift = -0.15 dB
Peak SAR (extrapolated) = 27.4 W/kg
SAR(1 g) = 13.6 W/kg; SAR(10 g) = 6.4 W/kg
Maximum value of SAR (measured) = 20.6 W/kg

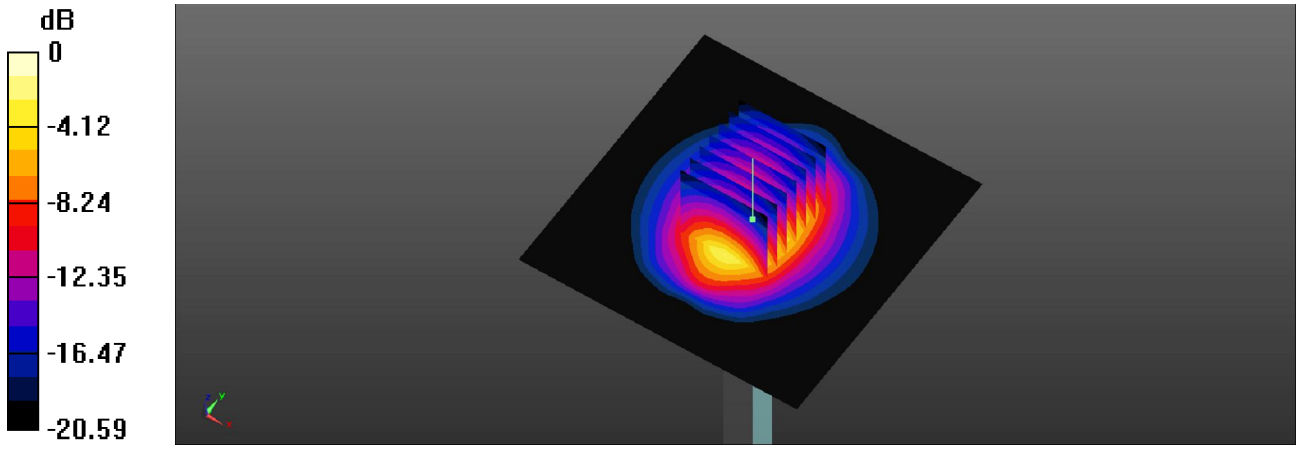

0 dB = 20.6 W/kg

Test Laboratory: Sporton International Inc. SAR/HAC Testing Lab Date: 2014.07.21

System Check_Body_2450MHz_140721

DUT: D2450V2 - SN: 736

Communication System: CW; Frequency: 2450 MHz;Duty Cycle: 1:1
Medium: MSL_2450_140721 Medium parameters used: f = 2450 MHz; σ = 1.942 mho/m; ε_r = 50.952; ρ = 1000 kg/m^3
Ambient Temperature：23.3 ℃； Liquid Temperature：22.4 ℃

DASY5 Configuration:
- Probe: EX3DV4 - SN3857; ConvF(7.14, 7.14, 7.14); Calibrated: 2014.05.23
- Sensor-Surface: 2mm (Mechanical Surface Detection)
- Electronics: DAE4 Sn1210; Calibrated: 2014.05.19
- Phantom: SAM3; Type: SAM; Serial: TP-1079
- Measurement SW: DASY52, Version 52.8 (7); SEMCAD X Version 14.4.5 (3634)

Pin=250mW/Area Scan (71x71x1): Measurement grid: dx=12mm, dy=12mm
Maximum value of SAR (interpolated) = 19.579 mW/g

Pin=250mW/Zoom Scan (7x7x7)/Cube 0: Measurement grid: dx=5mm, dy=5mm, dz=5mm
Reference Value = 85.745 V/m; Power Drift = -0.09 dB
Peak SAR (extrapolated) = 26.075 W/kg
SAR(1 g) = 12.7 mW/g; SAR(10 g) = 5.95 mW/g
Maximum value of SAR (measured) = 19.395 mW/g

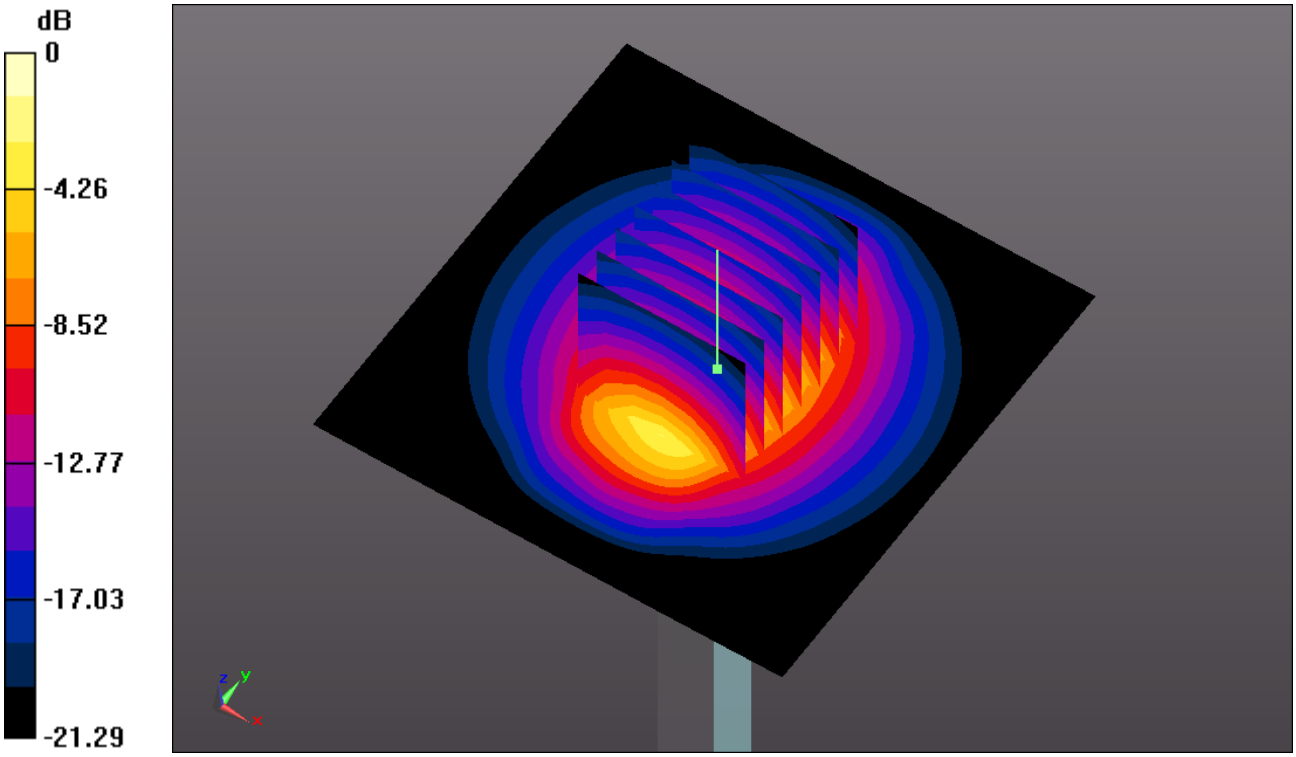

0 dB = 19.400mW/g

Test Laboratory: Sporton International Inc. SAR/HAC Testing Lab Date: 2014.07.13

System Check_Body_5200MHz_140713

DUT: D5000V2 - SN:1006

Communication System: CW; Frequency: 5200 MHz;Duty Cycle: 1:1
Medium: MSL_5000_140713 Medium parameters used: f = 5200 MHz; σ = 5.138 mho/m; ε_r = 47.493; ρ = 1000 kg/m^3
Ambient Temperature：23.4 ℃； Liquid Temperature：22.5 ℃

DASY5 Configuration:
- Probe: EX3DV4 - SN3857; ConvF(4.54, 4.54, 4.54); Calibrated: 2014.05.23
- Sensor-Surface: 1.4mm (Mechanical Surface Detection)
- Electronics: DAE4 Sn1210; Calibrated: 2014.05.19
- Phantom: SAM3; Type: SAM; Serial: TP-1079
- Measurement SW: DASY52, Version 52.8 (7); SEMCAD X Version 14.4.5 (3634)

Pin=100mW/Area Scan (71x71x1): Measurement grid: dx=10mm, dy=10mm
Maximum value of SAR (interpolated) = 17.142 mW/g

Pin=100mW/Zoom Scan (8x8x7)/Cube 0: Measurement grid: dx=4mm, dy=4mm, dz=1.4mm
Reference Value = 40.883 V/m; Power Drift = -0.09 dB
Peak SAR (extrapolated) = 29.790 W/kg
SAR(1 g) = 7.23 mW/g; SAR(10 g) = 2.04 mW/g
Maximum value of SAR (measured) = 17.269 mW/g

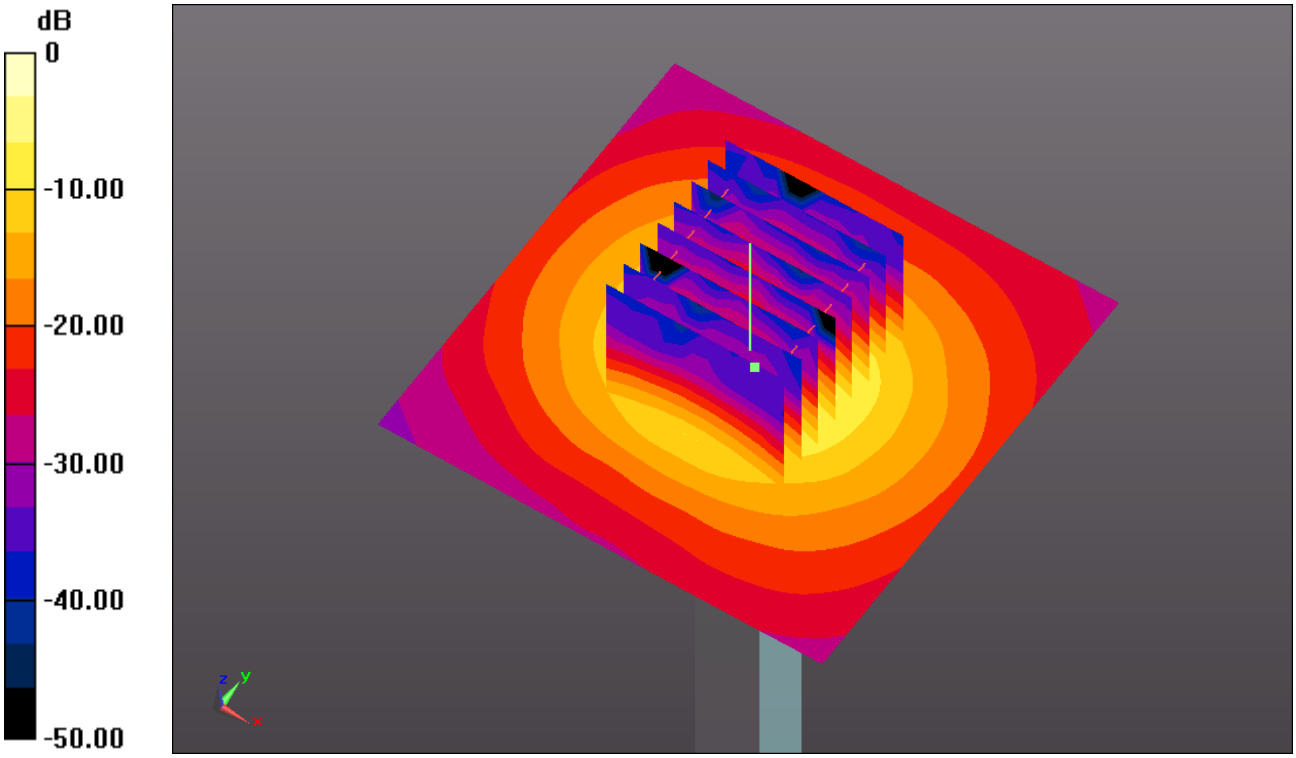

0 dB = 17.270mW/g

Test Laboratory: Sporton International Inc. SAR/HAC Testing Lab Date: 2014.07.15

System Check_Body_5800MHz_140715

DUT: D5000V2 - SN:1006

Communication System: CW; Frequency: 5800 MHz;Duty Cycle: 1:1
Medium: MSL_5000_140715 Medium parameters used: f = 5800 MHz; σ = 6.127 mho/m; ε_r = 47.784; ρ = 1000 kg/m^3
Ambient Temperature：23.4 ℃； Liquid Temperature：22.6 ℃

DASY5 Configuration:
- Probe: EX3DV4 - SN3857; ConvF(4.21, 4.21, 4.21); Calibrated: 2014.05.23
- Sensor-Surface: 1.4mm (Mechanical Surface Detection)
- Electronics: DAE4 Sn1210; Calibrated: 2014.05.19
- Phantom: SAM3; Type: SAM; Serial: TP-1079
- Measurement SW: DASY52, Version 52.8 (7); SEMCAD X Version 14.4.5 (3634)

Pin=100mW/Area Scan (71x71x1): Measurement grid: dx=10mm, dy=10mm
Maximum value of SAR (interpolated) = 17.982 mW/g

Pin=100mW/Zoom Scan (8x8x7)/Cube 0: Measurement grid: dx=4mm, dy=4mm, dz=1.4mm
Reference Value = 36.905 V/m; Power Drift = -0.14 dB
Peak SAR (extrapolated) = 32.729 W/kg
SAR(1 g) = 7.23 mW/g; SAR(10 g) = 2.02 mW/g
Maximum value of SAR (measured) = 17.733 mW/g

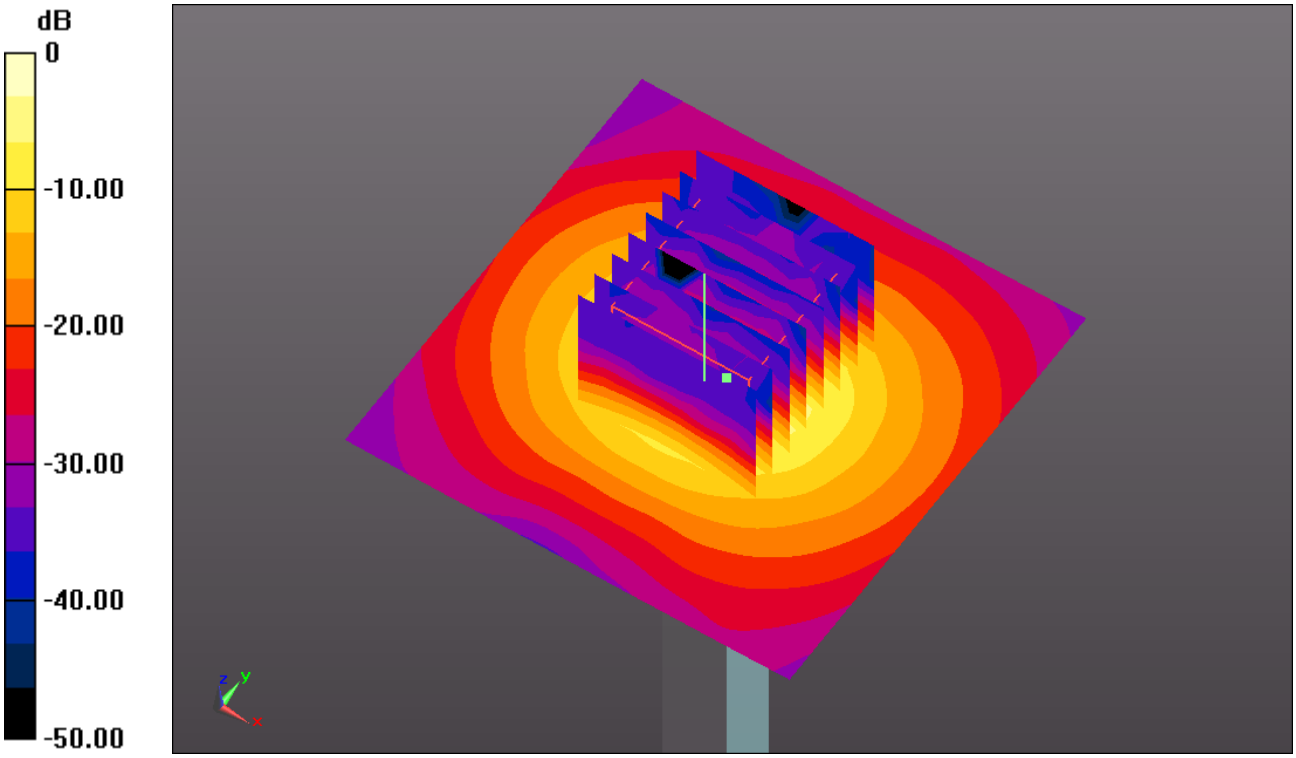

0 dB = 17.730mW/g

Appendix B. Plots of High SAR Measurement

The plots are shown as follows.

Test Laboratory: Sporton International Inc. SAR/HAC Testing Lab Date: 2014/7/17

01 WLAN 2.4G_802.11b_Bottom Face_0cm_Ch11_Ant 0

Communication System: 802.11b; Frequency: 2462 MHz;Duty Cycle: 1:1
Medium: MSL_2450_140717 Medium parameters used: f = 2462 MHz; σ = 2 S/m; ε_r = 51.115; ρ = 1000 kg/m^3
Ambient Temperature：23.5 ℃; Liquid Temperature ：22.7 ℃

DASY5 Configuration:
- Probe: EX3DV4 - SN3911; ConvF(7.32, 7.32, 7.32); Calibrated: 2014/4/22;
- Sensor-Surface: 2mm (Mechanical Surface Detection)
- Electronics: DAE4 Sn1358; Calibrated: 2014/4/30
- Phantom: ELI v5.0; Type: QDOVA002AA; Serial: TP:1201
- Measurement SW: DASY52, Version 52.8 (5); SEMCAD X Version 14.6.8 (7028)

Ch11/Area Scan (91x71x1): Interpolated grid: dx=12mm, dy=12mm
Maximum value of SAR (interpolated) = 1.37 W/kg

Ch11/Zoom Scan (7x7x7)/Cube 0: Measurement grid: dx=5mm, dy=5mm, dz=5mm
Reference Value = 1.271 V/m; Power Drift = 0.04 dB
Peak SAR (extrapolated) = 2.24 W/kg
SAR(1 g) = 1.020 W/kg; SAR(10 g) = 0.429 W/kg
Maximum value of SAR (measured) = 1.67 W/kg

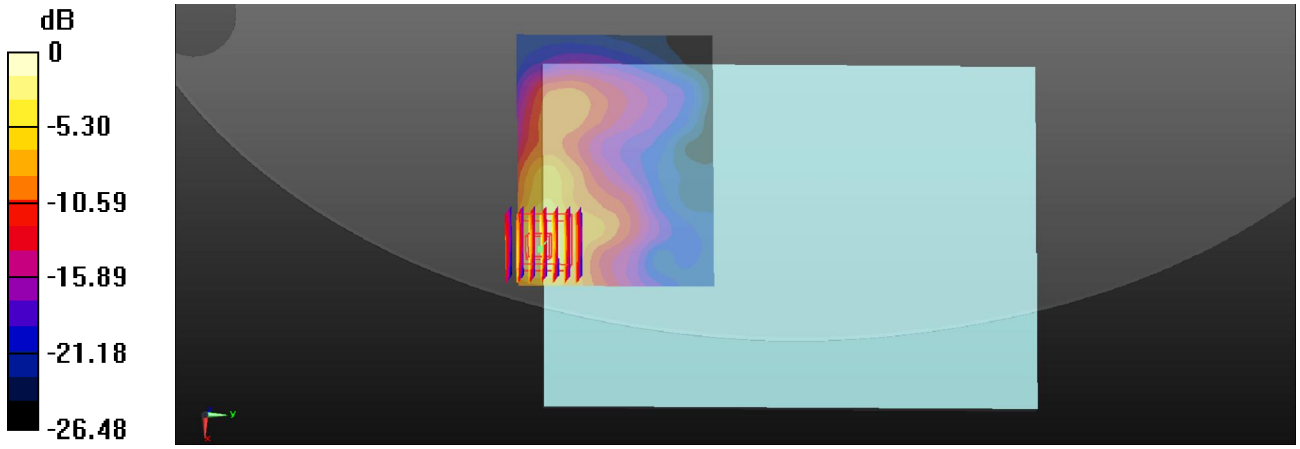

0 dB = 1.67 W/kg

Test Laboratory: Sporton International Inc. SAR/HAC Testing Lab Date: 2014/7/17

02 WLAN 2.4G_802.11b_Bottom Face_0cm_Ch1_Ant 1

Communication System: 802.11b; Frequency: 2412 MHz;Duty Cycle: 1:1
Medium: MSL_2450_140717 Medium parameters used: f = 2412 MHz; σ = 1.932 S/m; ε_r = 51.3; ρ = 1000 kg/m^3
Ambient Temperature：23.5 ℃; Liquid Temperature ：22.7 ℃

DASY5 Configuration:
- Probe: EX3DV4 - SN3911; ConvF(7.32, 7.32, 7.32); Calibrated: 2014/4/22;
- Sensor-Surface: 2mm (Mechanical Surface Detection)
- Electronics: DAE4 Sn1358; Calibrated: 2014/4/30
- Phantom: ELI v5.0; Type: QDOVA002AA; Serial: TP:1201
- Measurement SW: DASY52, Version 52.8 (5); SEMCAD X Version 14.6.8 (7028)

Ch1/Area Scan (61x191x1): Interpolated grid: dx=12mm, dy=12mm
Maximum value of SAR (interpolated) = 0.830 W/kg

Ch1/Zoom Scan (7x7x7)/Cube 0: Measurement grid: dx=5mm, dy=5mm, dz=5mm
Reference Value = 0.609 V/m; Power Drift = 0.09 dB
Peak SAR (extrapolated) = 1.18 W/kg
SAR(1 g) = 0.440 W/kg; SAR(10 g) = 0.161 W/kg
Maximum value of SAR (measured) = 0.789 W/kg

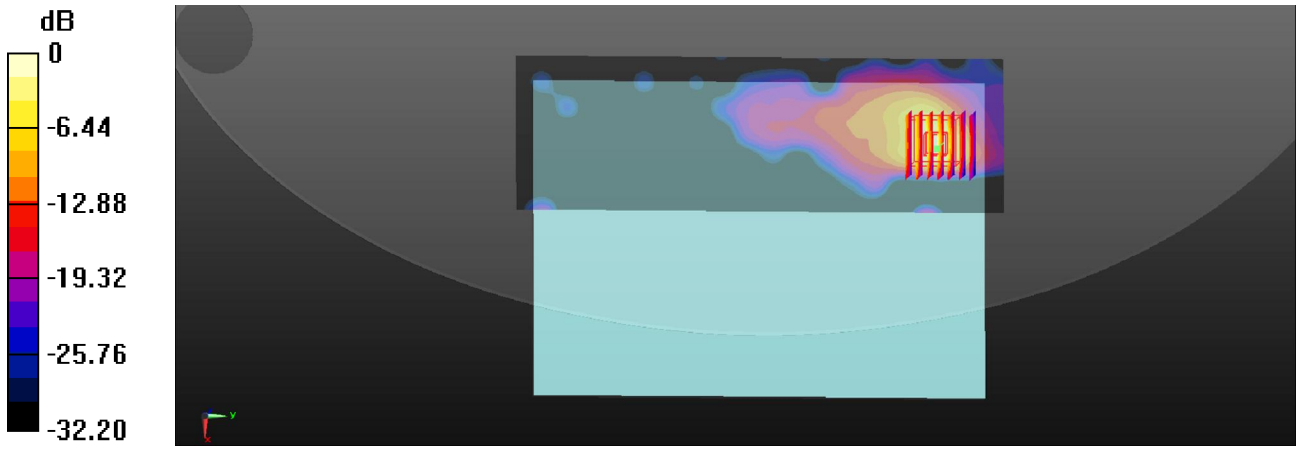

0 dB = 0.789 W/kg

Test Laboratory: Sporton International Inc. SAR/HAC Testing Lab Date: 2014/7/17

03 WLAN 2.4G_802.11n-HT20_Bottom Face_0cm_Ch6_Ant 0+1

Communication System: 802.11n; Frequency: 2437 MHz;Duty Cycle: 1:1.1
Medium: MSL_2450_140717 Medium parameters used: f = 2437 MHz; σ = 1.966 S/m; ε_r = 51.206; ρ = 1000 kg/m^3
Ambient Temperature：23.5 ℃; Liquid Temperature ：22.7 ℃

DASY5 Configuration:
- Probe: EX3DV4 - SN3911; ConvF(7.32, 7.32, 7.32); Calibrated: 2014/4/22;
- Sensor-Surface: 2mm (Mechanical Surface Detection)
- Electronics: DAE4 Sn1358; Calibrated: 2014/4/30
- Phantom: ELI v5.0; Type: QDOVA002AA; Serial: TP:1201
- Measurement SW: DASY52, Version 52.8 (5); SEMCAD X Version 14.6.8 (7028)

Ch6/Area Scan (91x201x1): Interpolated grid: dx=12mm, dy=12mm
Maximum value of SAR (interpolated) = 0.400 W/kg

Ch6/Zoom Scan (7x7x7)/Cube 0: Measurement grid: dx=5mm, dy=5mm, dz=5mm
Reference Value = 0.685 V/m; Power Drift = 0.07 dB
Peak SAR (extrapolated) = 0.576 W/kg
SAR(1 g) = 0.267 W/kg; SAR(10 g) = 0.114 W/kg
Maximum value of SAR (measured) = 0.397 W/kg

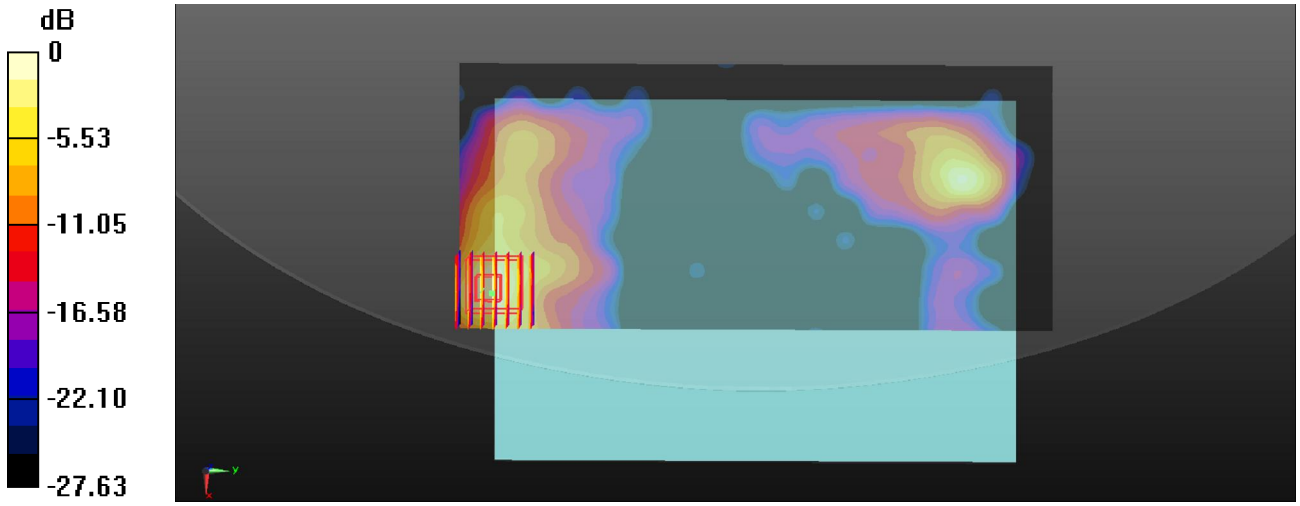

0 dB = 0.397 W/kg

Test Laboratory: Sporton International Inc. SAR/HAC Testing Lab Date: 2014.07.13

#04_WLAN 5G Band1_802.11a_6M_Edge2 0cm_Ch36_Ant.0

Communication System: WIFI (0); Frequency: 5180 MHz;Duty Cycle: 1:1.044
Medium: MSL_5000_140713 Medium parameters used: f = 5180 MHz; σ = 5.104 mho/m; ε_r = 47.493; ρ = 1000 kg/m^3
Ambient Temperature：23.4 ℃； Liquid Temperature：22.5 ℃

DASY5 Configuration:
- Probe: EX3DV4 - SN3857; ConvF(4.54, 4.54, 4.54); Calibrated: 2014.05.23
- Sensor-Surface: 1.4mm (Mechanical Surface Detection)
- Electronics: DAE4 Sn1210; Calibrated: 2014.05.19
- Phantom: SAM3; Type: SAM; Serial: TP-1079
- Measurement SW: DASY52, Version 52.8 (7); SEMCAD X Version 14.4.5 (3634)

Ch36/Area Scan (61x181x1): Measurement grid: dx=10mm, dy=10mm
Maximum value of SAR (interpolated) = 2.111 mW/g

Ch36/Zoom Scan (8x8x7)/Cube 0: Measurement grid: dx=4mm, dy=4mm, dz=1.4mm
Reference Value = 12.324 V/m; Power Drift = -0.11 dB
Peak SAR (extrapolated) = 3.587 W/kg
SAR(1 g) = 1.000 mW/g; SAR(10 g) = 0.267 mW/g
Maximum value of SAR (measured) = 2.156 mW/g

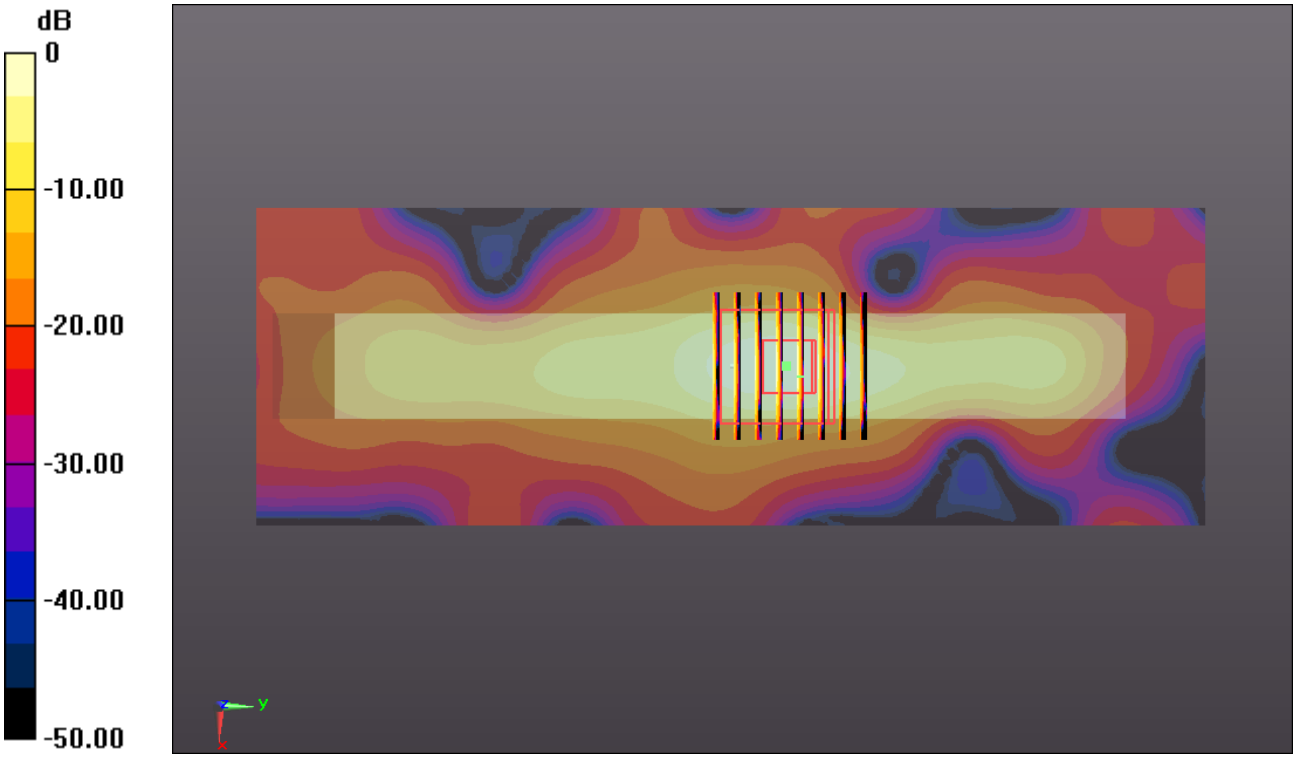

0 dB = 2.160mW/g

Test Laboratory: Sporton International Inc. SAR/HAC Testing Lab Date: 2014.07.13

#05_WLAN 5G Band1_802.11a_6M_Edge4 0cm_Ch36_Ant.1

Communication System: WIFI (0); Frequency: 5180 MHz;Duty Cycle: 1:1.047
Medium: MSL_5000_140713 Medium parameters used: f = 5180 MHz; σ = 5.104 mho/m; ε_r = 47.493; ρ = 1000 kg/m^3
Ambient Temperature：23.4 ℃； Liquid Temperature：22.5 ℃

DASY5 Configuration:
- Probe: EX3DV4 - SN3857; ConvF(4.54, 4.54, 4.54); Calibrated: 2014.05.23
- Sensor-Surface: 1.4mm (Mechanical Surface Detection)
- Electronics: DAE4 Sn1210; Calibrated: 2014.05.19
- Phantom: SAM3; Type: SAM; Serial: TP-1079
- Measurement SW: DASY52, Version 52.8 (7); SEMCAD X Version 14.4.5 (3634)

Ch36/Area Scan (61x181x1): Measurement grid: dx=10mm, dy=10mm
Maximum value of SAR (interpolated) = 2.830 mW/g

Ch36/Zoom Scan (8x8x7)/Cube 0: Measurement grid: dx=4mm, dy=4mm, dz=1.4mm
Reference Value = 0.994 V/m; Power Drift = -0.01 dB
Peak SAR (extrapolated) = 3.939 W/kg
SAR(1 g) = 1.120 mW/g; SAR(10 g) = 0.304 mW/g
Maximum value of SAR (measured) = 2.559 mW/g

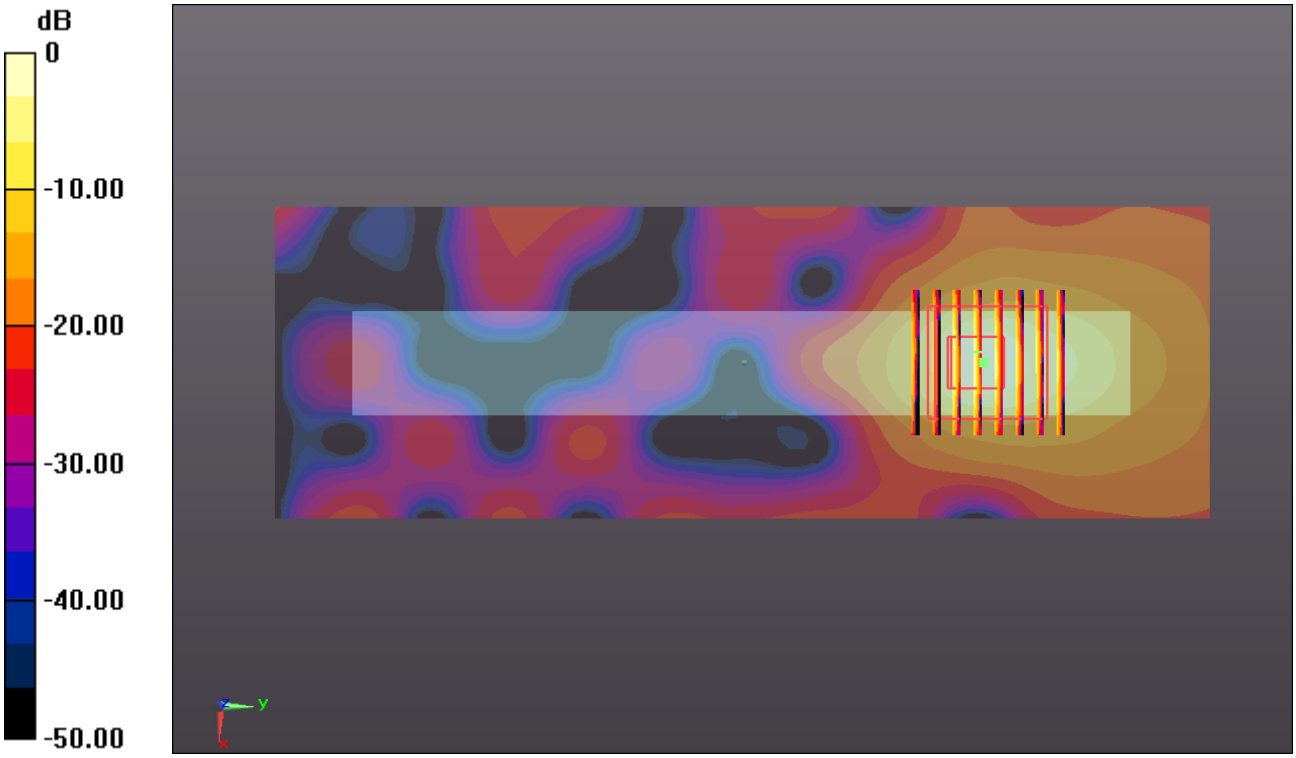

0 dB = 2.560mW/g

Test Laboratory: Sporton International Inc. SAR/HAC Testing Lab Date: 2014.07.13

#06_WLAN 5G Band1_802.11n-HT20_MCS0_Edge4 0cm_Ch36_Ant.0+1

Communication System: WIFI (0); Frequency: 5180 MHz;Duty Cycle: 1:1.099
Medium: MSL_5000_140713 Medium parameters used: f = 5180 MHz; σ = 5.104 mho/m; ε_r = 47.493; ρ = 1000 kg/m^3
Ambient Temperature：23.4 ℃； Liquid Temperature：22.5 ℃

DASY5 Configuration:
- Probe: EX3DV4 - SN3857; ConvF(4.54, 4.54, 4.54); Calibrated: 2014.05.23
- Sensor-Surface: 1.4mm (Mechanical Surface Detection)
- Electronics: DAE4 Sn1210; Calibrated: 2014.05.19
- Phantom: SAM3; Type: SAM; Serial: TP-1079
- Measurement SW: DASY52, Version 52.8 (7); SEMCAD X Version 14.4.5 (3634)

Ch36/Area Scan (61x181x1): Measurement grid: dx=10mm, dy=10mm
Maximum value of SAR (interpolated) = 1.198 mW/g

Ch36/Zoom Scan (8x8x7)/Cube 0: Measurement grid: dx=4mm, dy=4mm, dz=1.4mm
Reference Value = 0.700 V/m; Power Drift = -0.11 dB
Peak SAR (extrapolated) = 1.630 W/kg
SAR(1 g) = 0.452 mW/g; SAR(10 g) = 0.117 mW/g
Maximum value of SAR (measured) = 1.083 mW/g

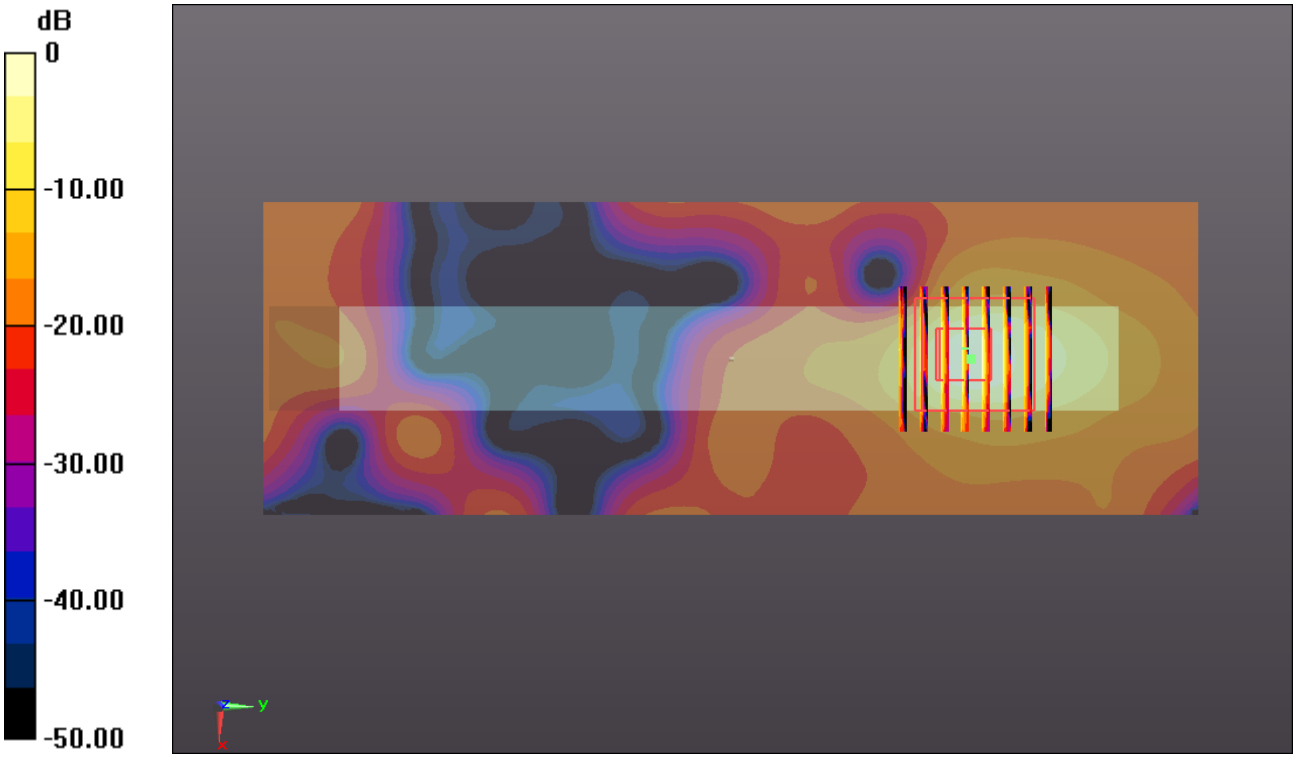

0 dB = 1.080mW/g

Test Laboratory: Sporton International Inc. SAR/HAC Testing Lab Date: 2014.07.15

#07_WLAN 5G Band4_802.11n-HT40_MCS0_Edge2 0cm_Ch159_Ant.0

Communication System: WIFI (0); Frequency: 5795 MHz;Duty Cycle: 1:1.051
Medium: MSL_5000_140715 Medium parameters used: f = 5795 MHz; σ = 5.987 mho/m; ε_r = 46.542; ρ = 1000 kg/m^3
Ambient Temperature：23.4 ℃； Liquid Temperature：22.6 ℃

DASY5 Configuration:
- Probe: EX3DV4 - SN3857; ConvF(4.21, 4.21, 4.21); Calibrated: 2014.05.23
- Sensor-Surface: 1.4mm (Mechanical Surface Detection)
- Electronics: DAE4 Sn1210; Calibrated: 2014.05.19
- Phantom: SAM3; Type: SAM; Serial: TP-1079
- Measurement SW: DASY52, Version 52.8 (7); SEMCAD X Version 14.4.5 (3634)

Ch159/Area Scan (61x181x1): Measurement grid: dx=10mm, dy=10mm
Maximum value of SAR (interpolated) = 1.170 mW/g

Ch159/Zoom Scan (8x8x7)/Cube 0: Measurement grid: dx=4mm, dy=4mm, dz=1.4mm
Reference Value = 8.490 V/m; Power Drift = -0.09 dB
Peak SAR (extrapolated) = 1.500 W/kg
SAR(1 g) = 0.457 mW/g; SAR(10 g) = 0.123 mW/g
Maximum value of SAR (measured) = 1.054 mW/g

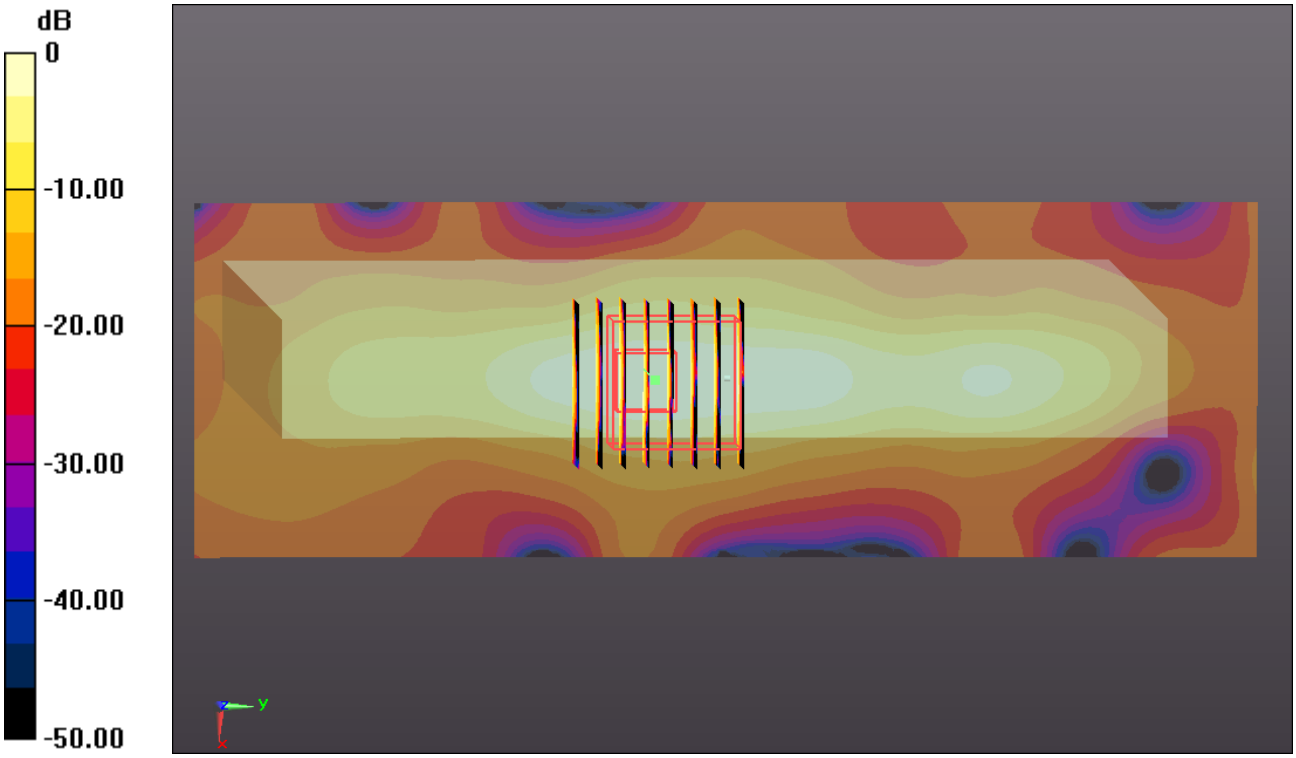

0 dB = 1.050mW/g

Test Laboratory: Sporton International Inc. SAR/HAC Testing Lab Date: 2014.07.15

#08_WLAN 5G Band4_802.11a_6M_Bottom Face 0cm_Ch165_Ant.1

Communication System: WIFI (0); Frequency: 5825 MHz;Duty Cycle: 1:1.047
Medium: MSL_5000_140715 Medium parameters used: f = 5825 MHz; σ = 6.054 mho/m; ε_r = 46.462; ρ = 1000 kg/m^3
Ambient Temperature：23.4 ℃； Liquid Temperature：22.6 ℃

DASY5 Configuration:
- Probe: EX3DV4 - SN3857; ConvF(4.21, 4.21, 4.21); Calibrated: 2014.05.23
- Sensor-Surface: 1.4mm (Mechanical Surface Detection)
- Electronics: DAE4 Sn1210; Calibrated: 2014.05.19
- Phantom: SAM3; Type: SAM; Serial: TP-1079
- Measurement SW: DASY52, Version 52.8 (7); SEMCAD X Version 14.4.5 (3634)

Ch165/Area Scan (131x81x1): Measurement grid: dx=10mm, dy=10mm
Maximum value of SAR (interpolated) = 2.925 mW/g

Ch165/Zoom Scan (8x8x7)/Cube 0: Measurement grid: dx=4mm, dy=4mm, dz=1.4mm
Reference Value = 0.927 V/m; Power Drift = -0.06 dB
Peak SAR (extrapolated) = 4.206 W/kg
SAR(1 g) = 1.270 mW/g; SAR(10 g) = 0.369 mW/g
Maximum value of SAR (measured) = 2.770 mW/g

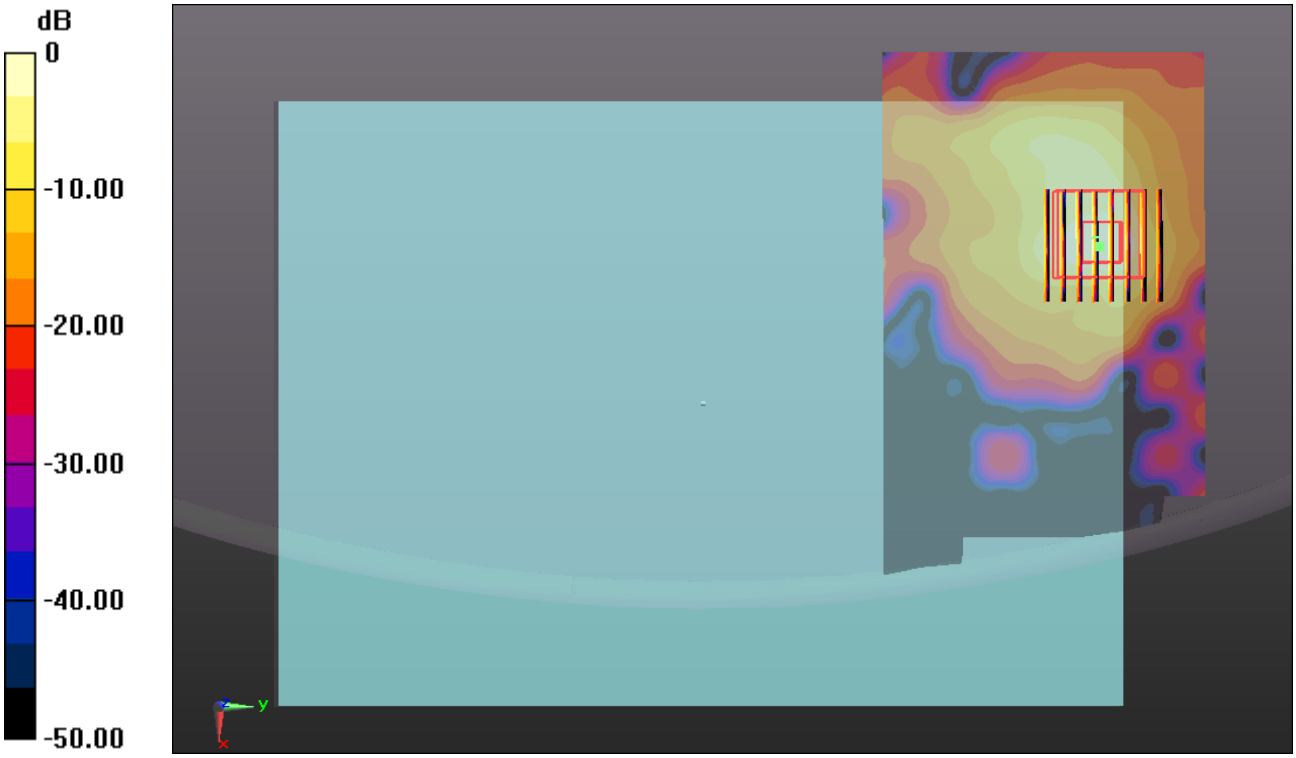

0 dB = 2.770mW/g

Test Laboratory: Sporton International Inc. SAR/HAC Testing Lab Date: 2014.07.15

#09_WLAN 5G Band4_802.11n-HT20_MCS0_Bottom Face 0cm_Ch149_Ant.0+1

Communication System: WIFI (0); Frequency: 5745 MHz;Duty Cycle: 1:1.099
Medium: MSL_5000_140715 Medium parameters used: f = 5745 MHz; σ = 5.936 mho/m; ε_r = 46.728; ρ = 1000 kg/m^3
Ambient Temperature：23.4 ℃； Liquid Temperature：22.6 ℃

DASY5 Configuration:
- Probe: EX3DV4 - SN3857; ConvF(4.21, 4.21, 4.21); Calibrated: 2014.05.23
- Sensor-Surface: 1.4mm (Mechanical Surface Detection)
- Electronics: DAE4 Sn1210; Calibrated: 2014.05.19
- Phantom: SAM3; Type: SAM; Serial: TP-1079
- Measurement SW: DASY52, Version 52.8 (7); SEMCAD X Version 14.4.5 (3634)

Ch149/Area Scan (141x261x1): Measurement grid: dx=10mm, dy=10mm
Maximum value of SAR (interpolated) = 1.068 mW/g

Ch149/Zoom Scan (8x8x7)/Cube 0: Measurement grid: dx=4mm, dy=4mm, dz=1.4mm
Reference Value = 1.572 V/m; Power Drift = -0.04 dB
Peak SAR (extrapolated) = 2.979 W/kg
SAR(1 g) = 0.918 mW/g; SAR(10 g) = 0.269 mW/g
Maximum value of SAR (measured) = 2.017 mW/g

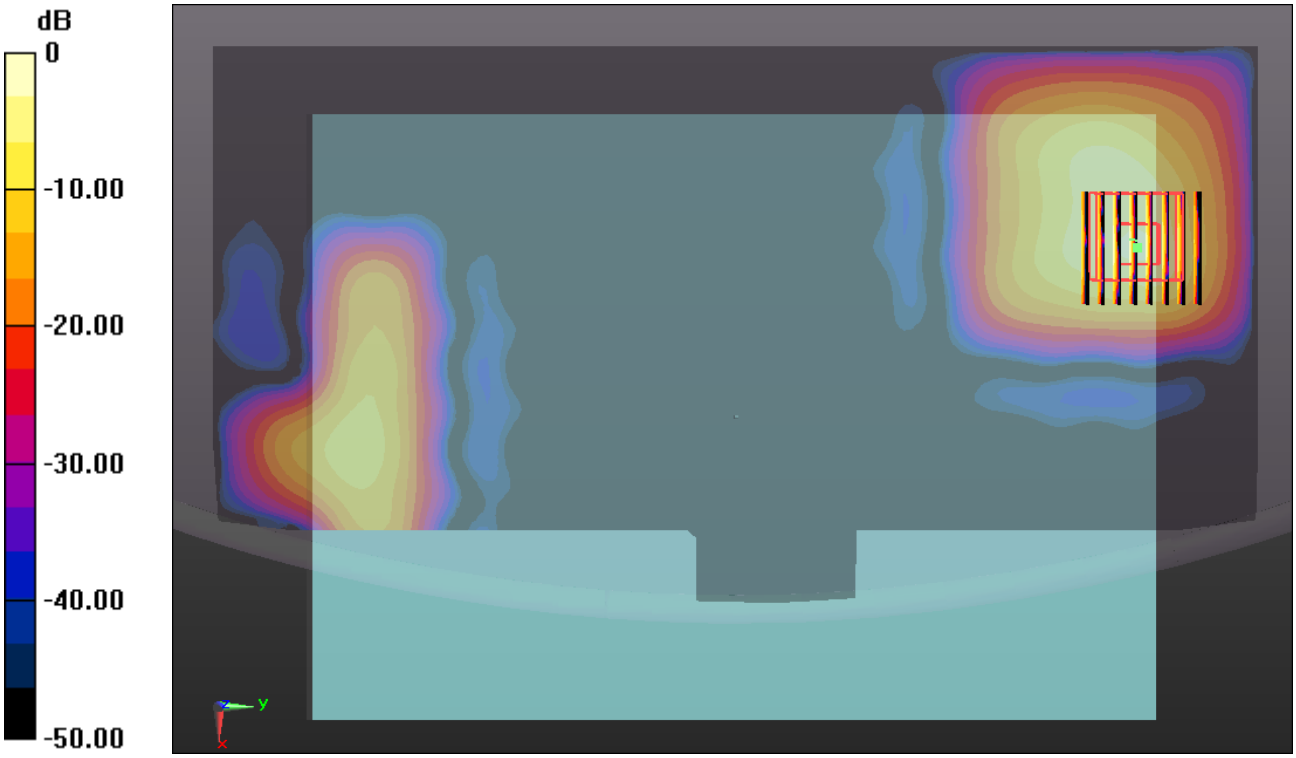

0 dB = 2.020mW/g

#10_BT_DH5_Bottom Face 0cm_Ch78

Communication System: Bluetooth (0); Frequency: 2480 MHz;Duty Cycle: 1:1.2
Medium: MSL_2450_140721 Medium parameters used: f = 2480 MHz; σ = 1.982 mho/m; ε_r = 50.808; ρ = 1000 kg/m^3
Ambient Temperature：23.3 ℃； Liquid Temperature：22.4 ℃

DASY5 Configuration:
- Probe: EX3DV4 - SN3857; ConvF(7.14, 7.14, 7.14); Calibrated: 2014.05.23
- Sensor-Surface: 2mm (Mechanical Surface Detection)
- Electronics: DAE4 Sn1210; Calibrated: 2014.05.19
- Phantom: SAM3; Type: SAM; Serial: TP-1079
- Measurement SW: DASY52, Version 52.8 (7); SEMCAD X Version 14.4.5 (3634)

Ch78/Area Scan (81x51x1): Measurement grid: dx=12mm, dy=12mm
Maximum value of SAR (interpolated) = 0.00915 mW/g

Ch78/Zoom Scan (7x7x7)/Cube 0: Measurement grid: dx=5mm, dy=5mm, dz=5mm
Reference Value = 0.669 V/m; Power Drift = -0.05 dB
Peak SAR (extrapolated) = 0.011 W/kg
SAR(1 g) = 0.000165 mW/g; SAR(10 g) = 1.72e-005 mW/g
Maximum value of SAR (measured) = 0.00603 mW/g

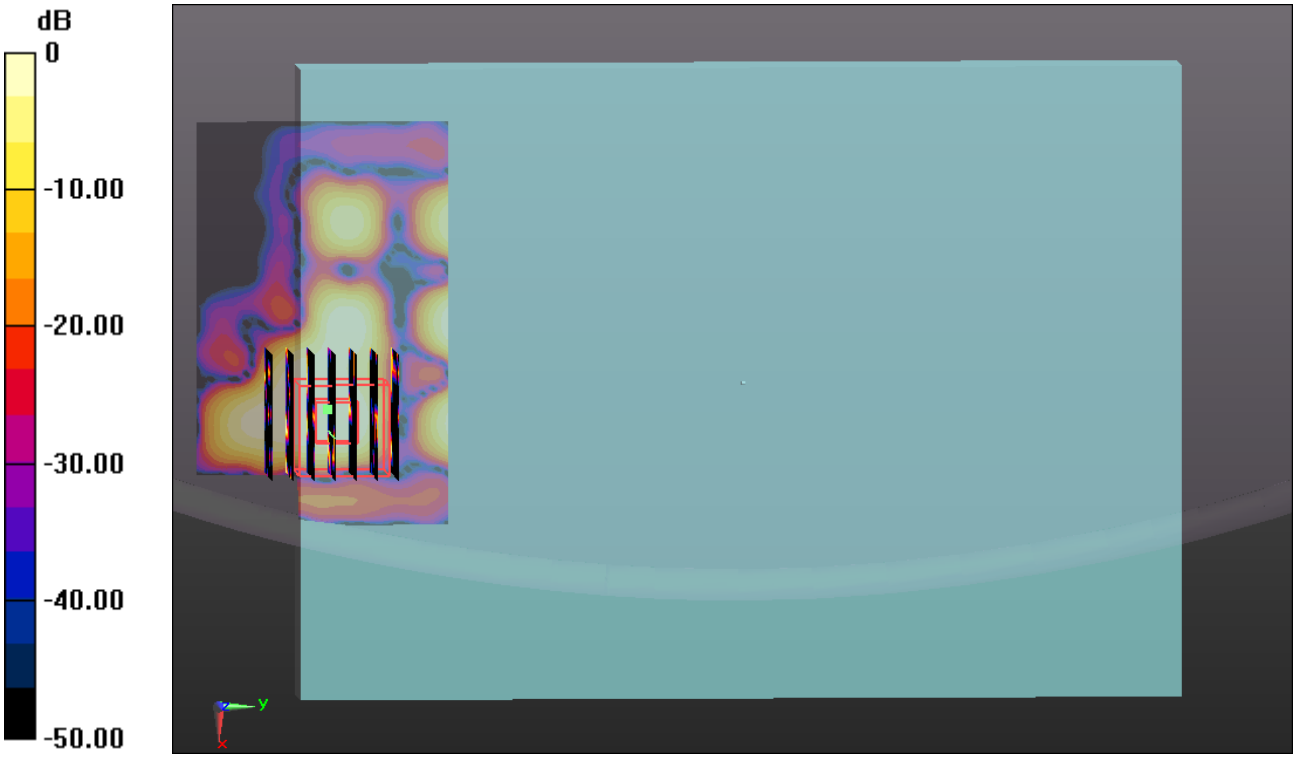

0 dB = 0.006mW/g