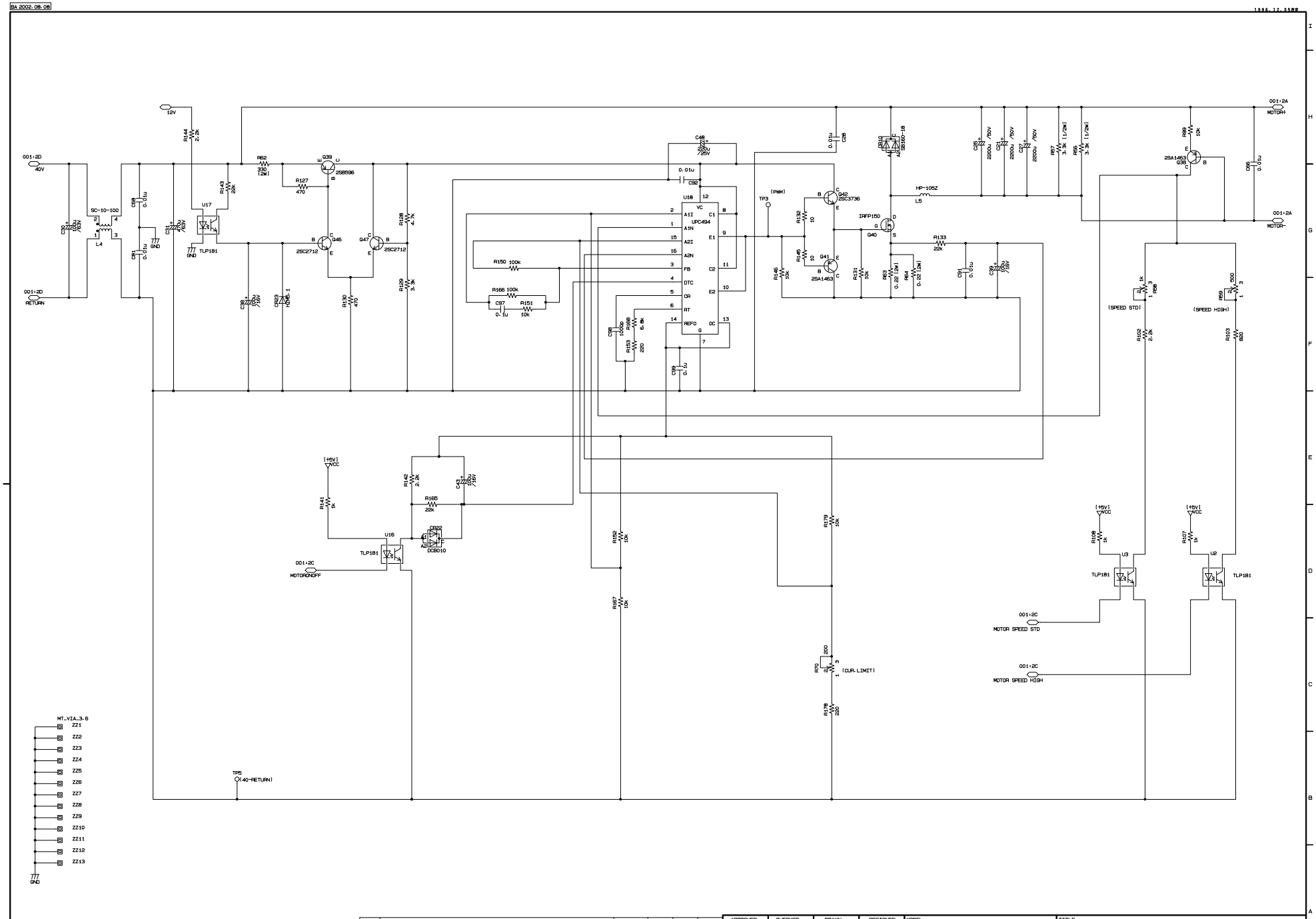

MOD	CONTENTS	DATE	REVISED	CHECKED	APPROVED

APPROVED	CHECKED	DRAWN	DESIGNED
		H. ITO 2002/07/09	H. ITO 2002/07/09

MODEL: RB719A / 719AP

KODEN KODEN ELECTRONICS CO.LTD.

TITLE: MODULATOR BOARD E48-100A

DWG. NO. E48CGB1100 002

PAGE 2/3