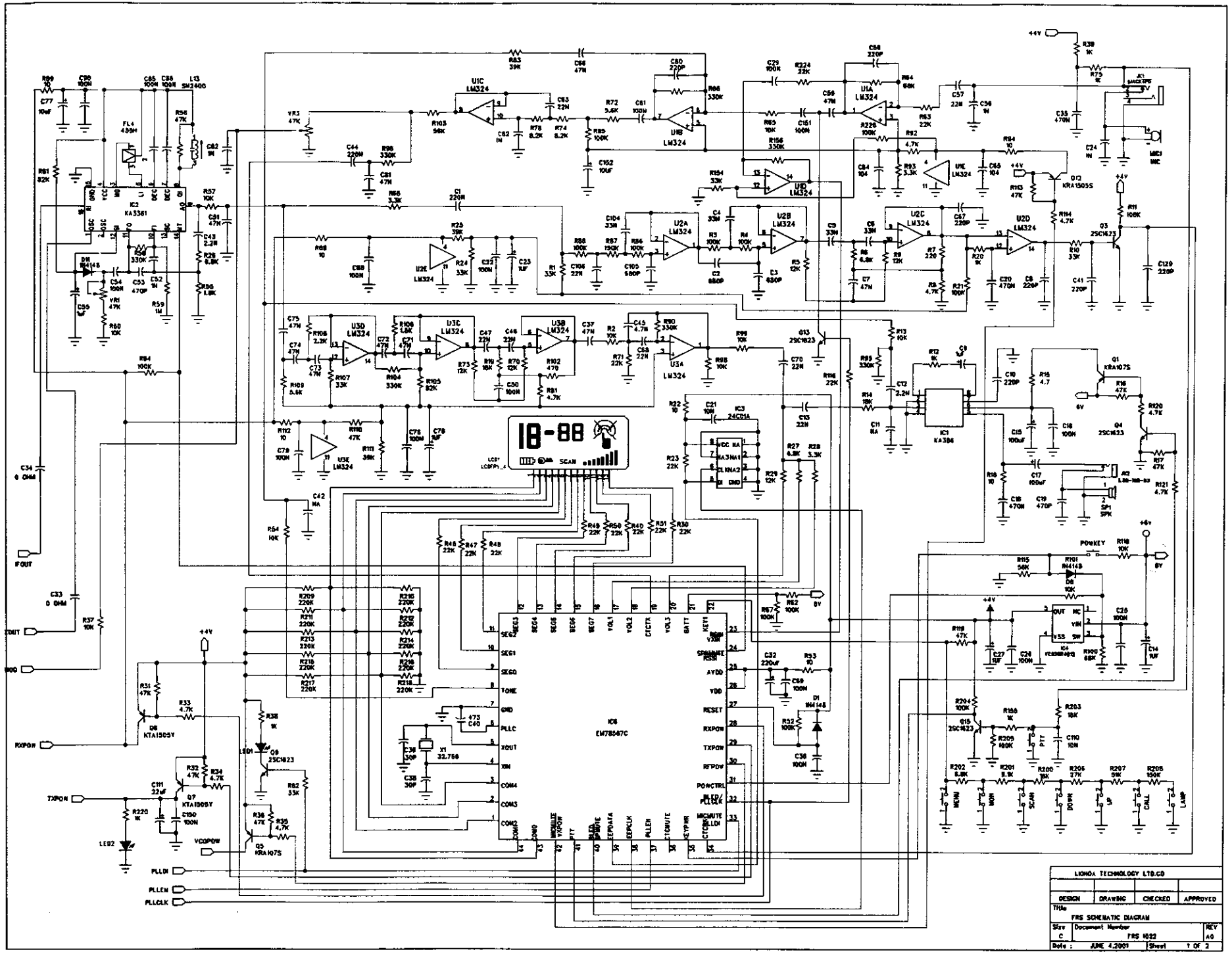
LIONOA TECHNOLOGY LTD.CO
DESIGN
DRAWING
CHECKED
APPROVED
Title
FRS SCHEMATIC DIAGRAM
Size
C
Document Number
FRS 1022
REV
A0
Date :
JUNE 4,2001
Sheet
1 OF 2

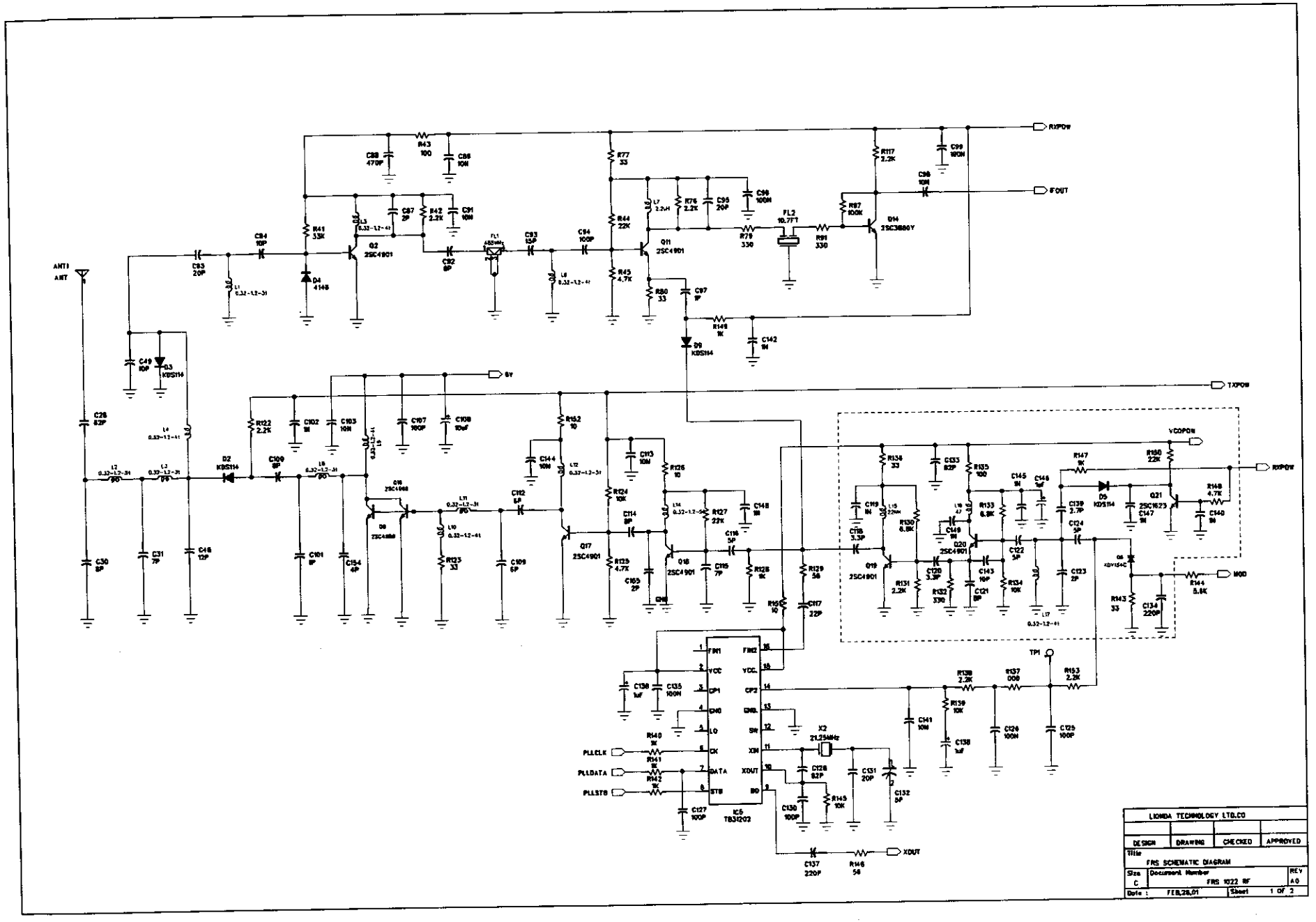
ANT1
ANT
RXPOW
IFOUT
TXPOW
VCOPOW
MOD
XOUT
PLLCLK
PLLDATA
PLLSTB
TP1
IC5
TB31203
X2
21.25MHz
FL2
10.7FT
FL1
455MHz
Q2
2SC4901
Q11
2SC4901
Q14
2SC3866Y
Q17
2SC4901
Q16
2SC4901
Q19
2SC4901
Q20
2SC4901
Q21
2SC1623
D2
KDS114
D3
KDS114
D4
4148
D9
KDS114
D5
KDV154C
LIONDA TECHNOLOGY LTD.CO
DESIGN
DRAWING
CHECKED
APPROVED
Title
FRS SCHEMATIC DIAGRAM
Size
C
Document Number
FRS 1022 RF
REV
A0
Date :
FEB,28,01
Sheet
1 OF 2