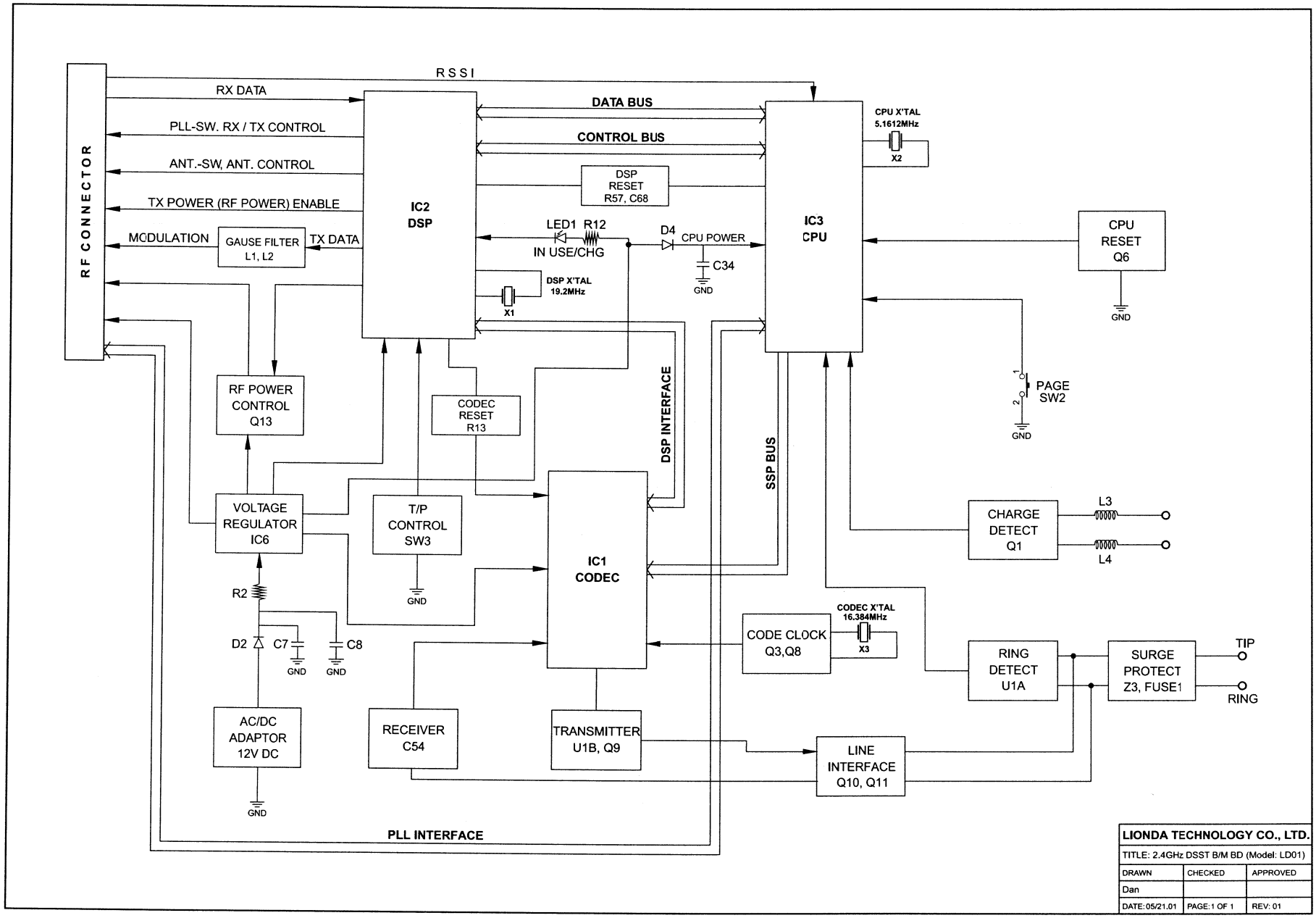

LIONDA TECHNOLOGY CO., LTD.		
TITLE: 2.4GHz DSST B/M BD (Model: LD01)		
DRAWN	CHECKED	APPROVED
Dan		
DATE:05/21.01	PAGE:1 OF 1	REV: 01

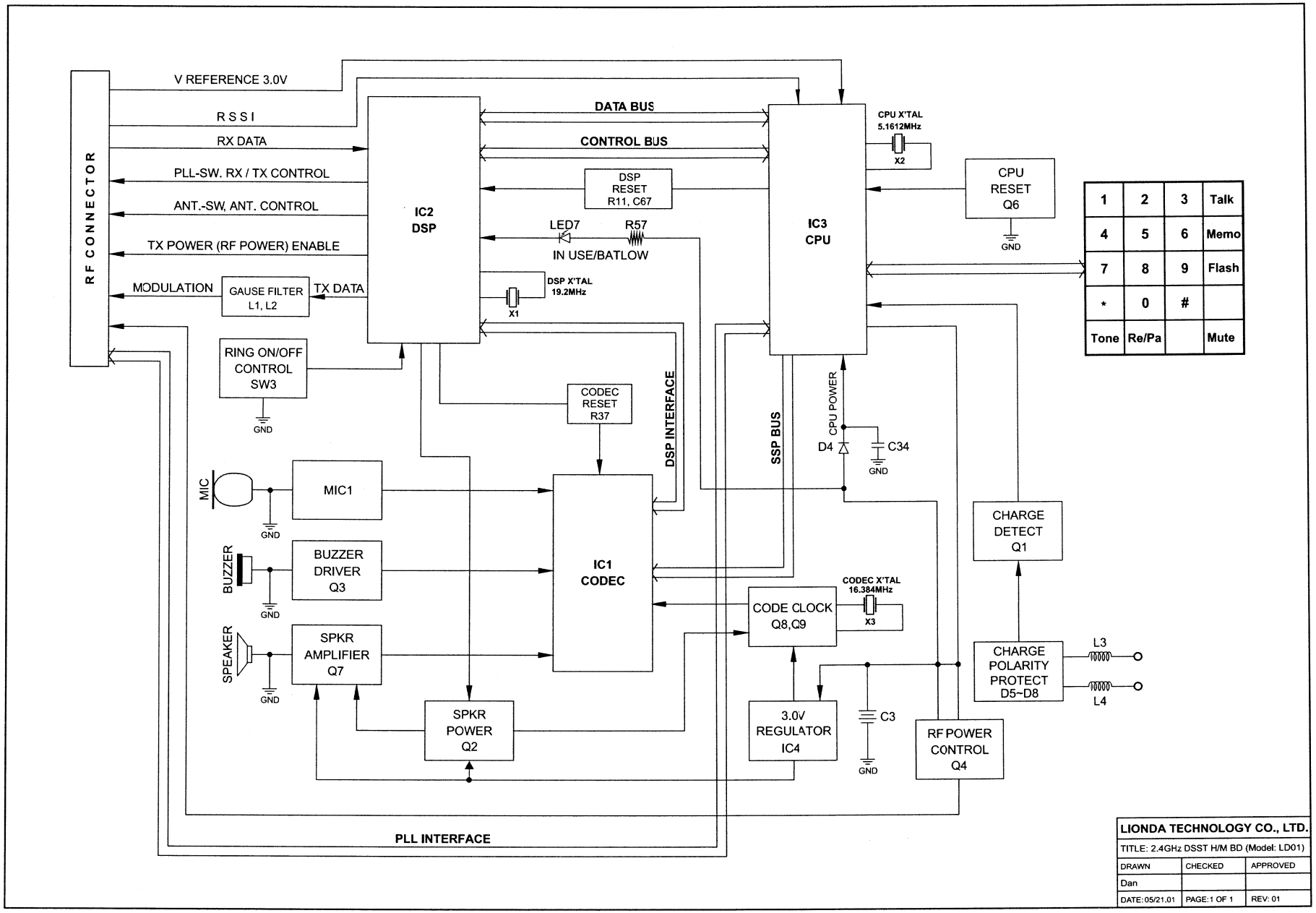

LIONDA TECHNOLOGY CO., LTD.		
TITLE: 2.4GHz DSST H/M BD (Model: LD01)		
DRAWN	CHECKED	APPROVED
Dan		
DATE: 05/21.01	PAGE: 1 OF 1	REV: 01

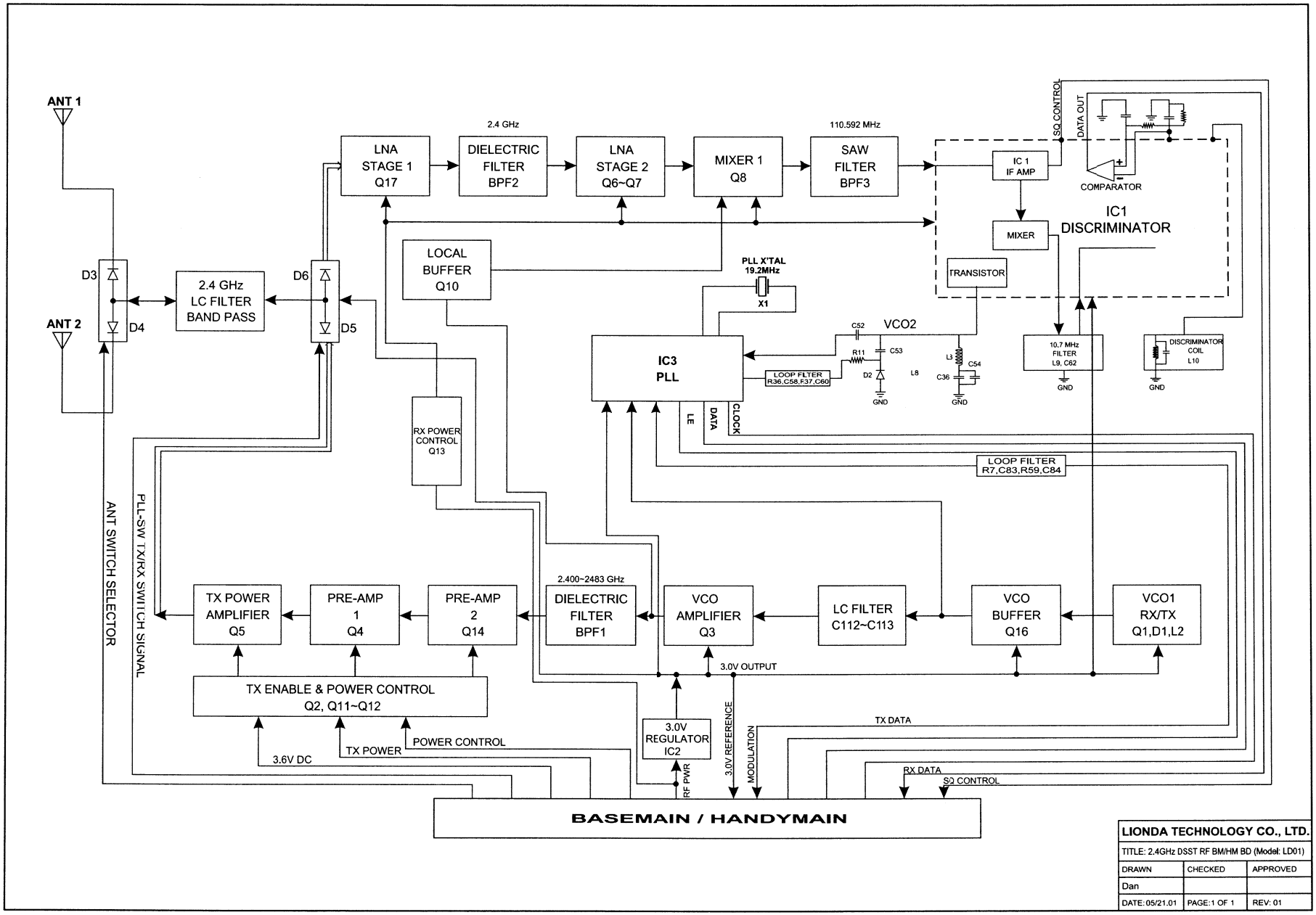

LIONDA TECHNOLOGY CO., LTD.		
TITLE: 2.4GHz DSST RF BM/HM BD (Model: LD01)		
DRAWN	CHECKED	APPROVED
Dan		
DATE: 05/21.01	PAGE: 1 OF 1	REV: 01