TRANWO
Smart Wireless Video

Model : VM2506

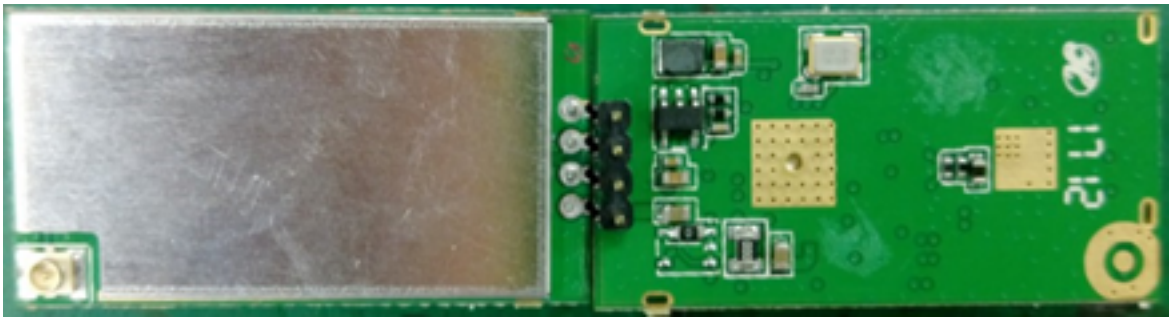

1. PRODUCT DESCRIPTION

The VM2506 is a highly integrated MAC/BBP and 2.4 GHz RF single chip with 150Mbps PHY rate supporting. It fully complies with IEEE 802.11n draft 3.0 and IEEE802.11 b/g /n feature rich wireless connectivity at high standards, delivers reliable, cost effective, throughput from an extended distance. Optimized RF architecture and baseband algorithms provide superb performance and low power consumption. Intelligent MAC design, deploys a high efficient USB engine and hardware data processing accelerators without overloading the host processor. The VM2506 is designed to support standard based features in the areas of security, quality of service and international regulation, giving end users the greatest performance anytime in any circumstance.

2. Features

• CMOS Technology with RF, Baseband, and MAC Integrated.

• 1T1R Mode with 150Mbps PHY Rate for Both Transmit and Receiving.

• Legacy and High Throughput Modes

• 20MHz/40MHz Bandwidth

• Reverse Direction Grant Data Flow and Frame Aggregation

• WEP 64/128, WPA, WPA2, TKIP, AES

• QoS - WMM, WMM - PS

• WPS, PIN, PBC

• Multiple BSSID Support

• USB 2.0

• International Regulation - 802.11d + h

• Cisco CCX Support

• Bluetooth Co - existence

• Low Power with Advanced Power Management

• Operating Systems - Windows XP 32/64, 2000, Vista 32/64, Linux, Macintosh.

3. Temperature Limit Ratings

Parameter	Minimum	Maximum	Units
Storage Temperature	-40	125	℃
Ambient Operating Temperature	0	60	℃
Junction Temperature	0	125	℃

4. PRODUCT SPECIFICATIONS

Standards	WiFi: EEE 802.11b, IEEE 802.11g, IEEE 802.11n
Bus Interface	WiFi: USB2.0
Data Rate	802.11b: 11, 5.5, 2, 1 Mbps
Modulation	802.11g: 54, 48, 36, 24, 18, 12, 9, 6 Mbps 802.11n: MCS 0 to 7 for HT20MHz ;MCS 0 to 7 for HT40MHz 802.11b: CCK, DQPSK, DBPSK
Techniques	802.11g: 64 QAM, 16 QAM, QPSK, BPSK 802.11n: 64 QAM, 16 QAM, QPSK, BPSK
Operating Channel Frequency Range	WiFi 2.4GHz: 11: (Ch. 1-11) – United States 2400MHz ~ 2483.5 MHz
Security	WiFi : WPA, WPA2 , WPS2.0, WAPI
OS supported	Linux/Android

5.Electrical Specifications

1.RF Characteristics for IEEE802.11b (11Mbps mode unless otherwise specified)

Items	Contents
Contents	IEEE802.11b
Mode	CCK 11 Mbps
Channel frequency	2400 ~ 2483.5 MHz
RX (per≤85dBm@8%)	-85 dBm
TX Power Level	506.991mW
EVM (≤-28)	-28

2. RF Characteristics for IEEE802.11g (54Mbps mode unless otherwise specified)

Items	Contents
Contents	IEEE802.11g
Mode	OFDM 54 Mbps
Channel frequency	2400 ~ 2483.5 MHz
RX (per≤70dBm@10%)	-70 dBm
Power Level	506.991mW
EVM (≤-28)	-28 dBm

3. RF Characteristics for IEEE802.11n (BW20_MCS7)

Items	Contents
Contents	IEEE802.11n (BW20_MCS7)
Mode	OFDM 65 Mbps
Channel frequency	2400 ~ 2483.5 MHz
RX (per≤65 dBm@10%)	-65 dBm
Power Level	506.991mW
EVM (≤-28)	-28 dBm

4. RF Characteristics for IEEE802.11n (BW40_MCS7)

Items	Contents
Contents	IEEE802.11n (BW40_MCS7)
Mode	OFDM 135 Mbps
Channel frequency	2400 ~ 2483.5 MHz
RX (per≤65 dBm@10%)	-65 dBm
Power Level	506.991mW
EVM (≤-28)	-28 dBm

6.Pin Assignment

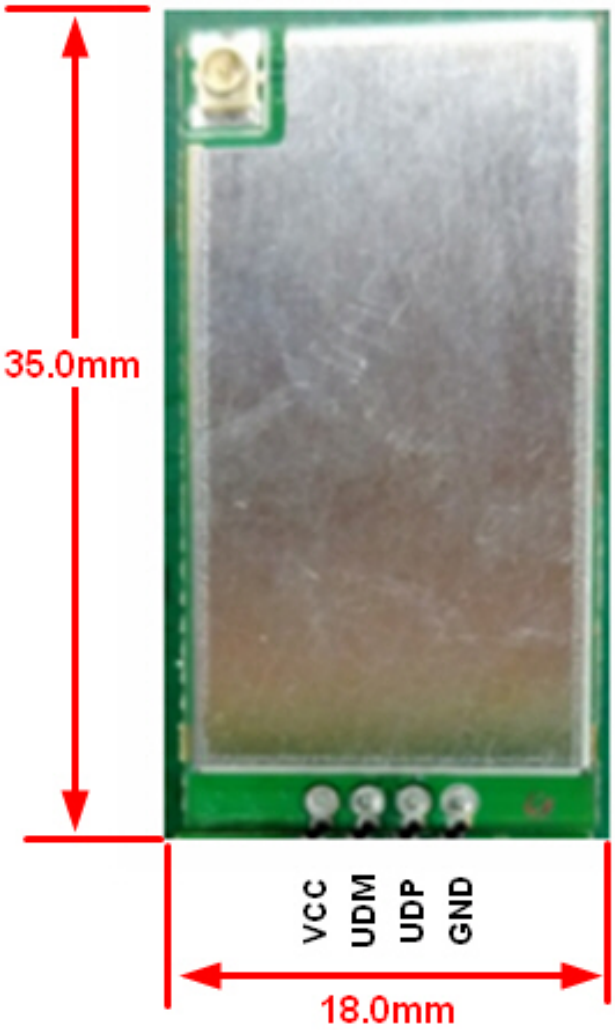

Pin No.	Pin name	Pin Function
1	VCC	Power Supply 3.3V
2	UDM	USB data -
3	UDP	USB data +
4	GND	Ground

生產流程:	1	2	3	4	5	6	7	8
工序名稱:	原材料檢查	生产冲压首檢	生 產	抽 查	包装	抽 查	出货前检查	出货
負責部門:	品管	品管	生 產	品管	包装部	品管	品管	包装部

披鋒要求:料厚0.1~1.0mm,披鋒0.03mm以下.料厚1.2~2.0mm,披鋒0.05mm以下.

Shielding case drawing

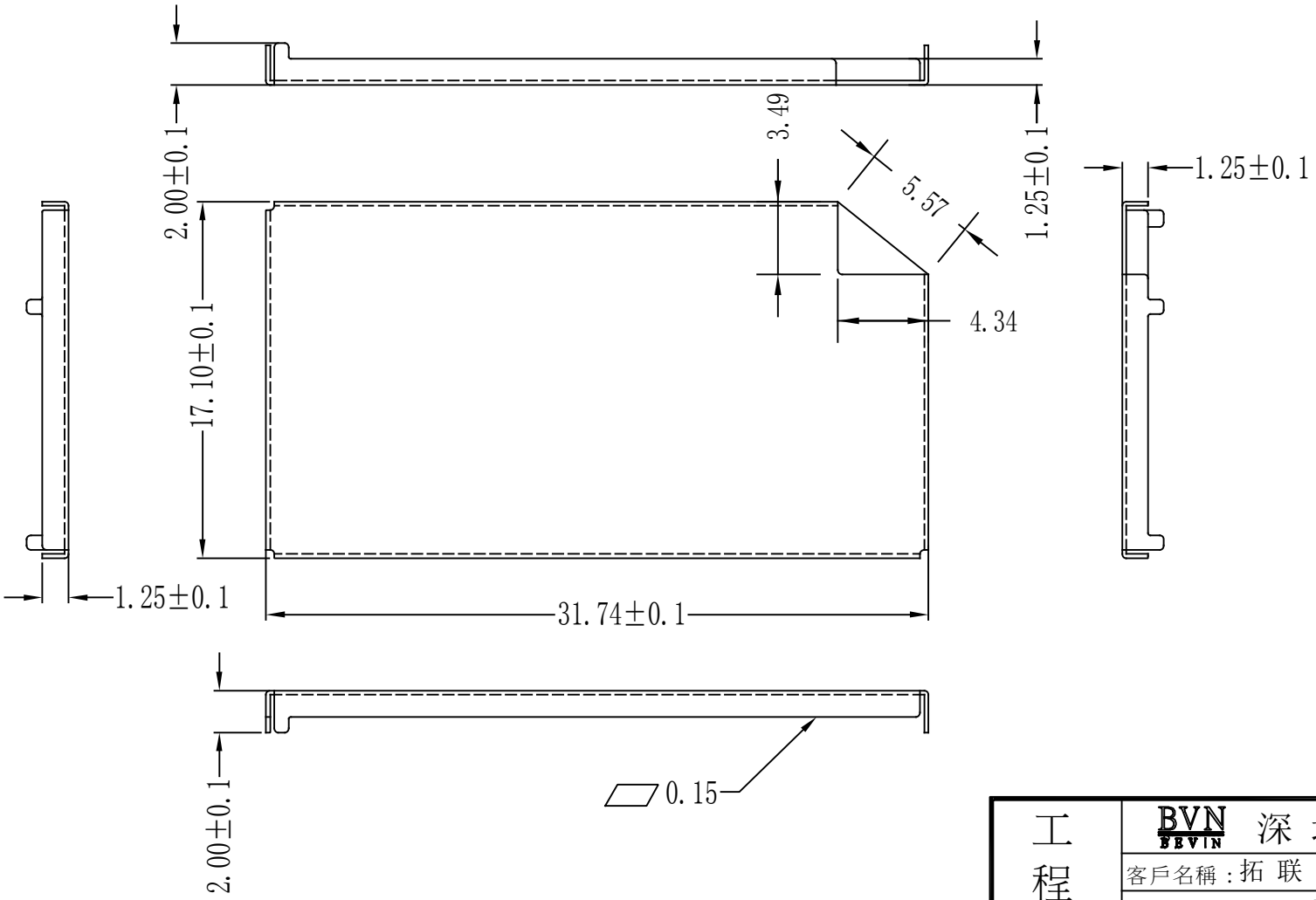

注意事项
1材质厚度0.2mm
2高度精度要求0.1mm
3屏蔽盖厚度1.25包括材质厚度

版次	修改说明	绘图	审核	核准

一般公差±					
	63-150	0.15	0.4	0.6	1.2
	16-63	0.1	0.3	0.4	0.7
	4-16	0.08	0.2	0.3	0.4
	<4	0.05	0.12	0.2	0.3
	等级	A级	B级	C级	D级

工程圖	BVN BEVIN 深圳市佰汶科技有限公司		
	客戶名稱：拓 联	客戶貨號:	
	产品名称： 3070屏蔽盖	材質： T=0.2 洋白铜	硬度：
	佰汶編號：	☐電鍍/其它:	☑不電鍍
比例：	模具編號：	製圖：吴林海	日期: 2017/10/23
單位：	版本：X1	審核：	日期:
備註:	1-4 為重要尺寸	批准：	日期:

Connector Dim.

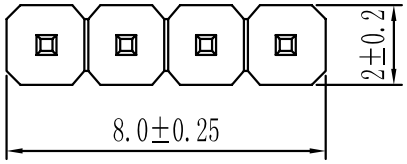

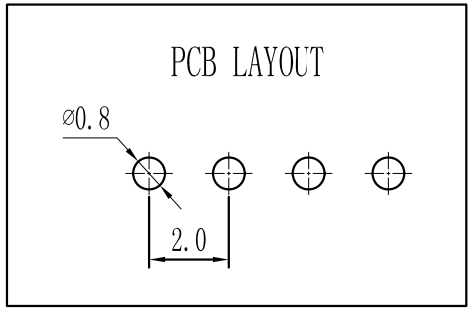

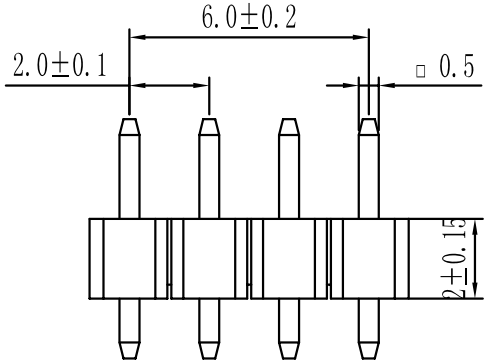

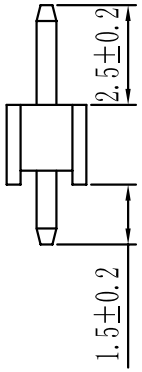

技术规范:

额定电流 : 1.5AMP

适用温度 : -40℃to+105℃

接触电阻 : 20mΩ Max

绝缘电阻 : 1000MΩ Min

耐电压 : AC 500V

绝缘材料 :

Polyester (UL94V-0)

Standard:PA6T

端子材质 : Brass

电镀规范 : Au 0.8u″

							角度	±2°	东莞市康导电子科技有限公司							
							X.	±0.25	设计		日期		型号规格	PH:2.0MM H:2.0MM W:2.0MM PC:1.5MM PA:2.5MM 1*4P L:6.0MM 黄铜镀金0.8U″ PA6T料		
							.X	±0.15	审核		日期		物料编号			
							.XX	±0.05	批准		日期					
变更单号	变更标记	变更日期	描述	变更人	审核	批准	未标公差		比例	1:1	单位	mm	页数	1 OF 1	A0	

Federal Communication Commission Interference Statement

This device complies with Part 15 of the FCC Rules. Operation is subject to the following two conditions: (1) This device may not cause harmful interference, and (2) this device must accept any interference received, including interference that may cause undesired operation.

This equipment has been tested and found to comply with the limits for a Class B digital device, pursuant to Part 15 of the FCC Rules. These limits are designed to provide reasonable protection against harmful interference in a residential installation. This equipment generates, uses and can radiate radio frequency energy and, if not installed and used in accordance with the instructions, may cause harmful interference to radio communications. However, there is no guarantee that interference will not occur in a particular installation. If this equipment does cause harmful interference to radio or television reception, which can be determined by turning the equipment off and on, the user is encouraged to try to correct the interference by one of the following measures:

- Reorient or relocate the receiving antenna.
- Increase the separation between the equipment and receiver.
- Connect the equipment into an outlet on a circuit different from that to which the receiver is connected.
- Consult the dealer or an experienced radio/TV technician for help.

FCC Caution: Any changes or modifications not expressly approved by the party responsible for compliance could void the user's authority to operate this equipment.

This transmitter must not be co-located or operating in conjunction with any other antenna or transmitter.

FOR MOBILE DEVICE USAGE (>20cm/low power)

Radiation Exposure Statement:

This equipment complies with FCC radiation exposure limits set forth for an uncontrolled environment. This equipment should be installed and operated with minimum distance 20cm between the radiator & your body.

This device is intended only for OEM integrators under the following conditions:

The transmitter module may not be co-located with any other transmitter or antenna.

As long as this conditions above is met, further transmitter test will not be required. However, the OEM integrator is still responsible for testing their end-product for any additional compliance requirements required with this module installed

IMPORTANT NOTE: In the event that these conditions can not be met (for example certain laptop configurations or co-location with another transmitter), then the FCC authorization is no longer considered valid and the FCC ID can not be used on the final product. In these circumstances, the OEM integrator will be responsible for re-evaluating the end product (including the transmitter) and obtaining a separate FCC authorization.

End Product Labeling

FOR MOBILE DEVICE USAGE (>20cm/low power)

This transmitter module is authorized only for use in device where the antenna may be installed such that 20 cm may be maintained between the antenna and users. The final end product must be labeled in a visible area with the following: “Contains FCC ID: O6L-VM2506”. The grantee's FCC ID can be used only when all FCC compliance requirements are met.

Manual Information To the End User

The OEM integrator has to be aware not to provide information to the end user regarding how to install or remove this RF module in the user’s manual of the end product which integrates this module.

The end user manual shall include all required regulatory information/warning as show in this manual.

Approved antenna(s) list

Model	Type	Gain(dBi)	Frequency range(GHz)	Connecter
VM2506RX	Dipole	2	2.4~2.5	i-pex
VM2506TX	Dipole	2	2.4~2.5	i-pex