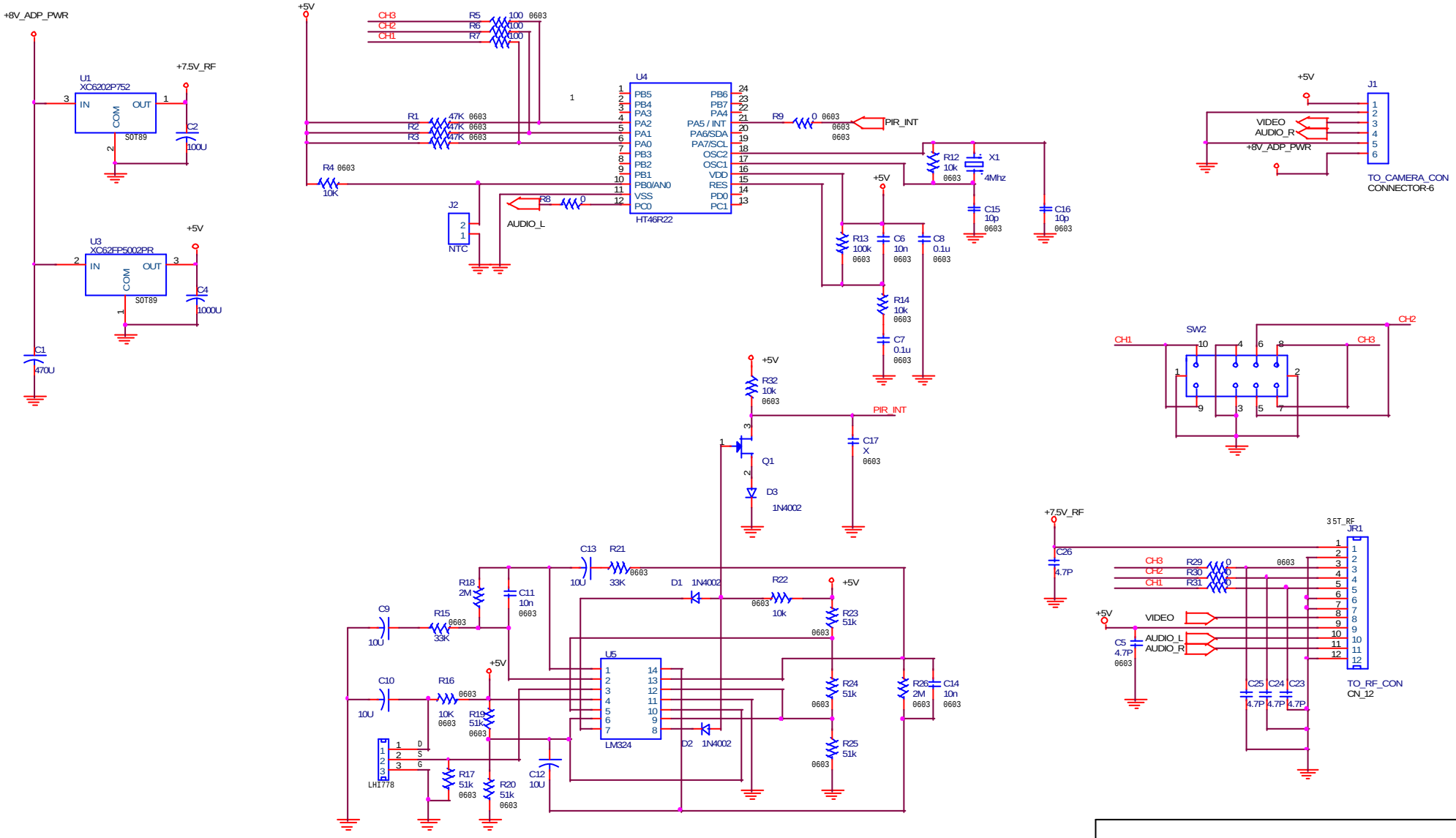

Title	35T
Size B	Document Number 110-210026-00
Rev	3.2
Date:	Tuesday, March 01, 2005
Sheet	1 of 1

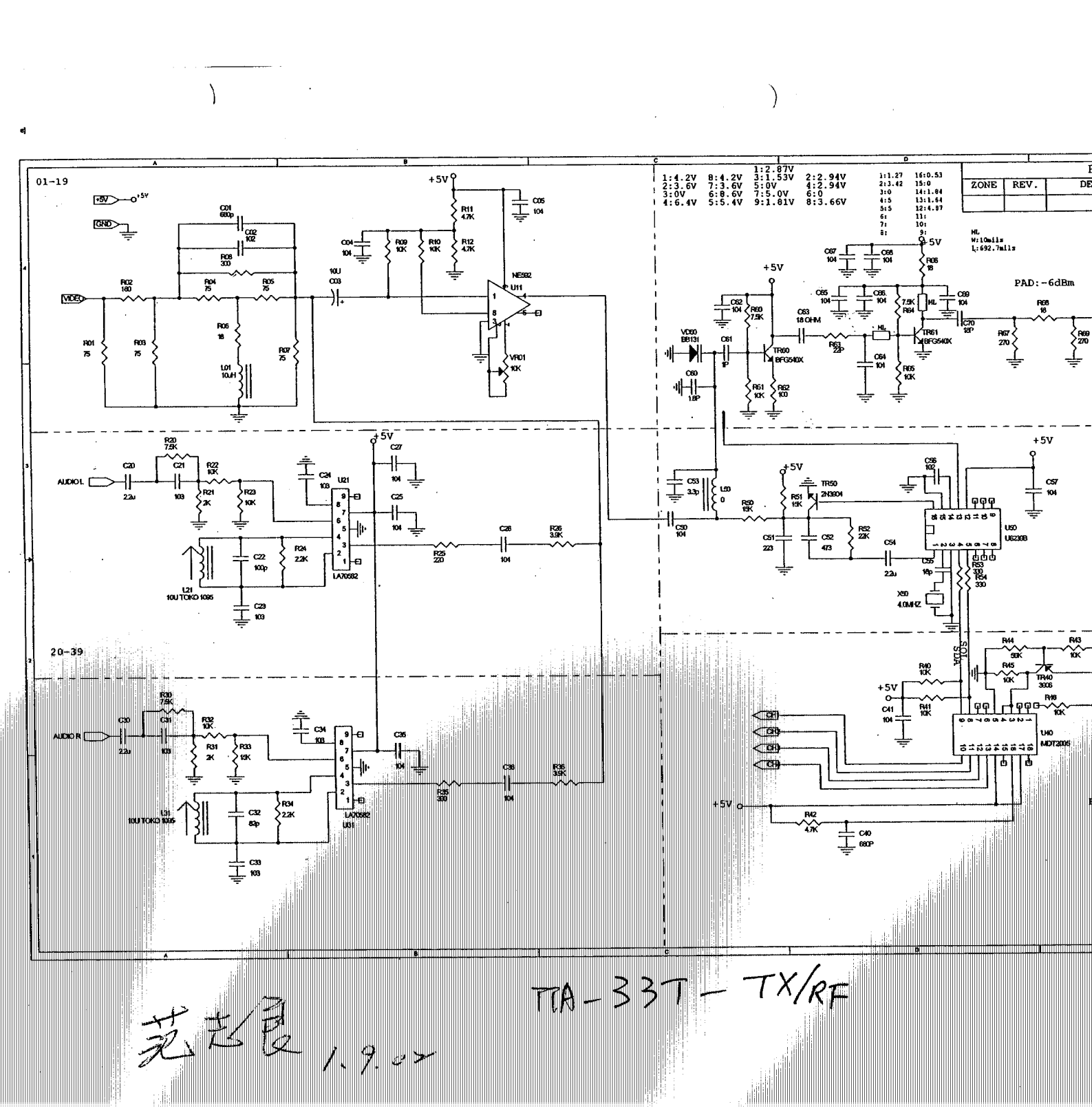

TIA-33T-TX/RF

黄志强 1.9.07