Operating Instructions

Radar sensor for continuous level measurement

VEGAPULS C 22

Two-wire 4 … 20 mA/HART

Document ID: 58344

Contents

1 About this document ... 4
1.1 Function ... 4
1.2 Target group ... 4
1.3 Symbols used ... 4

2 For your safety ... 5
2.1 Authorised personnel ... 5
2.2 Appropriate use ... 5
2.3 Warning about incorrect use ... 5
2.4 General safety instructions ... 5
2.5 EU conformity ... 6
2.6 Installation and operation in the USA and Canada ... 6
2.7 Safety instructions for Ex areas ... 6

3 Product description ... 7
3.1 Configuration ... 7
3.2 Principle of operation ... 8
3.3 Adjustment ... 8
3.4 Packaging, transport and storage ... 9
3.5 Accessories ... 10

4 Mounting ... 11
4.1 General instructions ... 11
4.2 Mounting versions ... 11
4.3 Mounting instructions ... 12
4.4 Measurement setup - Flow ... 16

5 Connecting to power supply ... 18
5.1 Preparing the connection ... 18
5.2 Wiring plan ... 18
5.3 Switch-on phase ... 19

6 Access protection ... 20
6.1 Bluetooth radio interface ... 20
6.2 Protection of the parameterization ... 20

7 Setup with smartphone/tablet (Bluetooth) ... 22
7.1 Preparations ... 22
7.2 Connecting ... 22
7.3 Parameter adjustment ... 23

8 Setup with PC/notebook (Bluetooth) ... 24
8.1 Preparations ... 24
8.2 Connecting ... 24
8.3 Parameter adjustment ... 25

9 Setup with PC/notebook (VEGACONNECT) ... 26
9.1 Connect the PC ... 26
9.2 Parameter adjustment with PACTware ... 27
9.3 Saving the parameterisation data ... 28

10 Menu overview ... 29

11 Diagnostics and servicing 31
11.1 Maintenance 31
11.2 Rectify faults 31
11.3 Diagnosis, fault messages 32
11.4 Status messages according to NE 107 32
11.5 Treatment of measurement errors 35
11.6 Software update 38
11.7 How to proceed if a repair is necessary 39

12 Dismount 40
12.1 Dismounting steps 40
12.2 Disposal 40

13 Certificates and approvals 41
13.1 Environmental instructions 41

14 Supplement 42
14.1 Technical data 42
14.2 Dimensions 46
14.3 Industrial property rights 47
14.4 Hash function acc. to mbed TLS 47
14.5 Trademark 47

58344-EN-191014

Editing status: 2019-10-10

1 About this document

1.1 Function

This instruction provides all the information you need for mounting, connection and setup as well as important instructions for maintenance, fault rectification, the exchange of parts and the safety of the user. Please read this information before putting the instrument into operation and keep this manual accessible in the immediate vicinity of the device.

1.2 Target group

This operating instructions manual is directed to trained personnel. The contents of this manual must be made available to the qualified personnel and implemented.

1.3 Symbols used

Document ID
This symbol on the front page of this instruction refers to the Document ID. By entering the Document ID on www.vega.com you will reach the document download.

Information, note, tip: This symbol indicates helpful additional information and tips for successful work.

Note: This symbol indicates notes to prevent failures, malfunctions, damage to devices or plants.

Caution: Non-observance of the information marked with this symbol may result in personal injury.

Warning: Non-observance of the information marked with this symbol may result in serious or fatal personal injury.

Danger: Non-observance of the information marked with this symbol results in serious or fatal personal injury.

Ex applications
This symbol indicates special instructions for Ex applications.

- **List**
  The dot set in front indicates a list with no implied sequence.

1 **Sequence of actions**
Numbers set in front indicate successive steps in a procedure.

Battery disposal
This symbol indicates special information about the disposal of batteries and accumulators.

58344-EN-191014

2 For your safety

2.1 Authorised personnel

All operations described in this documentation must be carried out only by trained, qualified personnel authorised by the plant operator.

During work on and with the device, the required personal protective equipment must always be worn.

2.2 Appropriate use

VEGAPULS C 22 is a sensor for continuous level measurement.

You can find detailed information about the area of application in chapter "*Product description*".

Operational reliability is ensured only if the instrument is properly used according to the specifications in the operating instructions manual as well as possible supplementary instructions.

2.3 Warning about incorrect use

Inappropriate or incorrect use of this product can give rise to application-specific hazards, e.g. vessel overfill through incorrect mounting or adjustment. Damage to property and persons or environmental contamination can result. Also, the protective characteristics of the instrument can be impaired.

2.4 General safety instructions

This is a state-of-the-art instrument complying with all prevailing regulations and directives. The instrument must only be operated in a technically flawless and reliable condition. The operator is responsible for the trouble-free operation of the instrument. When measuring aggressive or corrosive media that can cause a dangerous situation if the instrument malfunctions, the operator has to implement suitable measures to make sure the instrument is functioning properly.

During the entire duration of use, the user is obliged to determine the compliance of the necessary occupational safety measures with the current valid rules and regulations and also take note of new regulations.

The safety instructions in this operating instructions manual, the national installation standards as well as the valid safety regulations and accident prevention rules must be observed by the user.

For safety and warranty reasons, any invasive work on the device beyond that described in the operating instructions manual may be carried out only by personnel authorised by the manufacturer. Arbitrary conversions or modifications are explicitly forbidden. For safety reasons, only the accessory specified by the manufacturer must be used.

To avoid any danger, the safety approval markings and safety tips on the device must also be observed.

The low transmitting power of the radar sensor is far below the internationally approved limits. No health impairments are to be expected

with intended use. The band range of the transmission frequency can be found in chapter "*Technical data*".

2.5 EU conformity

The device fulfils the legal requirements of the applicable EU directives. By affixing the CE marking, we confirm the conformity of the instrument with these directives.

The EU conformity declaration can be found on our homepage.

2.6 Installation and operation in the USA and Canada

This information is only valid for USA and Canada. Hence the following text is only available in the English language.

Installations in the US shall comply with the relevant requirements of the National Electrical Code (ANSI/NFPA 70).

Installations in Canada shall comply with the relevant requirements of the Canadian Electrical Code

A Class 2 power supply unit has to be used for the installation in the USA and Canada.

2.7 Safety instructions for Ex areas

For Ex applications, only devices with corresponding Ex approval may be used. Observe the Ex-specific safety instructions. These are an integral part of the operating instructions and are enclosed with every device with Ex approval.

3 Product description

3.1 Configuration

Scope of delivery

The scope of delivery encompasses:

- VEGAPULS C 22 radar sensor
- Information sheet "*Documents and software*" with:
  - Instrument serial number
  - QR code with link for direct scanning
- Information sheet "*PINs and Codes*" with:
  - Bluetooth access code
  - DataMatrix code with link for direct scanning
- Information sheet "*Emergency unlock codes*" with:
  - Bluetooth access code
  - Bluetooth unlock code
  - Device unlock code

The further scope of delivery encompasses:

- Documentation
  - Ex-specific "*Safety instructions*" (with Ex versions)
  - If necessary, further certificates

Note:
Optional instrument features are also described in this operating instructions manual. The respective scope of delivery results from the order specification.

Scope of this operating instructions

This operating instructions manual applies to the following instrument versions:

- Hardware version from 1.0.0
- Software version from 1.0.0

Constituent parts

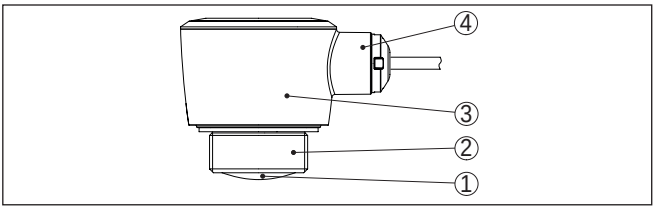

Fig. 1: Components of VEGAPULS C 22

1 Radar antenna
2 Process fitting
3 Electronics housing
4 Cable outlet

Type label

You can find the type label on the sensor housing as well as on the type label support on the connection cable.

The type label contains the most important data for identification and use of the instrument.

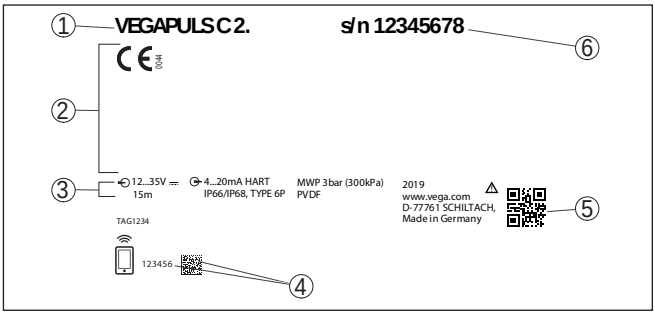

Fig. 2: Layout of the type label (example)

1 *Instrument type*
2 *Field for approvals*
3 *Technical data*
4 *Number or DataMatrix code for Bluetooth access*
5 *QR code for device documentation*
6 *Serial number*

Documents and software

Move to "www.vega.com" and enter in the search field the serial number of your instrument.

There you can find the following information about the instrument:

- Order data
- Documentation
- Software

Alternatively, you can find all via your smartphone:

- Scan the QR-code on the type label of the device or
- Enter serial number manually in the VEGA Tools app (available free of charge in the respective stores)

3.2 Principle of operation

Application area

VEGAPULS C 22 is a radar sensor for continuous level measurement. It is suitable for liquids and solids in virtually all industries, particularly in the water and waste water industry.

Functional principle

The instrument emits a continuous, frequency-modulated radar signal through its antenna. The emitted signal is reflected by the medium and received by the antenna as an echo with modified frequency. The frequency change is proportional to the distance and is converted into the filling height.

3.3 Adjustment

Wireless adjustment

Devices with integrated Bluetooth module can be adjusted wirelessly via standard adjustment tools:

- Smartphone/tablet (iOS or Android operating system)
- PC/notebook with Bluetooth USB adapter (Windows operating system)

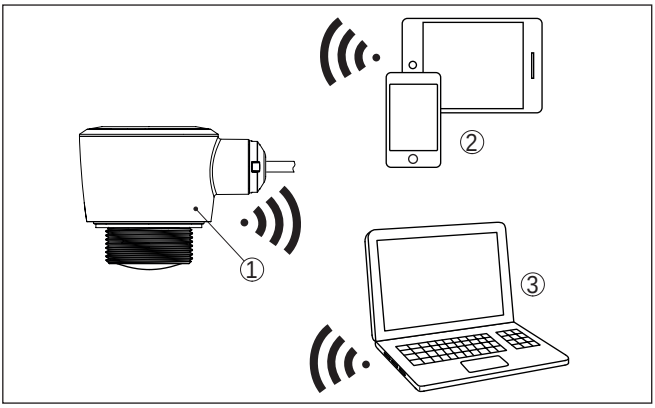

Fig. 3: Wireless connection to standard operating devices with integrated Bluetooth LE

1 *Sensor*
2 *Smartphone/Tablet*
3 *PC/Notebook*

Adjustment via the signal cable

Devices with signal output 4 … 20 mA/HART can also be operated via a signal cable. This is done via an interface converter and a PC/notebook using DTM/PACTware.

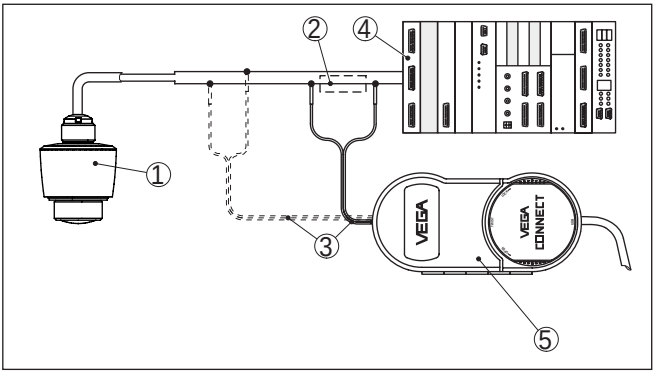

Fig. 4: Connecting the PC to the signal cable

1 *Sensor*
2 *HART resistance 250 Ω (optional depending on evaluation)*
3 *Connection cable with 2 mm pins and terminals*
4 *Voltage supply*
5 *Interface adapter VEGACONNECT*
6 *PC/notebook with DTM/PACTware*

3.4 Packaging, transport and storage

Packaging

Your instrument was protected by packaging during transport. Its capacity to handle normal loads during transport is assured by a test based on ISO 4180.

The packaging consists of environment-friendly, recyclable cardboard. For special versions, PE foam or PE foil is also used. Dispose of the packaging material via specialised recycling companies.

Transport

Transport must be carried out in due consideration of the notes on the transport packaging. Nonobservance of these instructions can cause damage to the device.

Transport inspection

The delivery must be checked for completeness and possible transit damage immediately at receipt. Ascertained transit damage or concealed defects must be appropriately dealt with.

Storage

Up to the time of installation, the packages must be left closed and stored according to the orientation and storage markings on the outside.

Unless otherwise indicated, the packages must be stored only under the following conditions:

- Not in the open
- Dry and dust free
- Not exposed to corrosive media
- Protected against solar radiation
- Avoiding mechanical shock and vibration

Storage and transport temperature

The permissible storage and transport temperatures can be found in chapter "*Supplement - Technical data - Ambient conditions*"

3.5 Accessories

Flanges

Screwed flanges are available in different versions according to the following standards: DIN 2501, EN 1092-1, BS 10, ASME B 16.5, JIS B 2210-1984, GOST 12821-80.

Welded sockets and adapters

Welded sockets are used to connect the sensors to the process.

Threaded adapters enable simple adaptation of sensors with standard threaded fittings, e.g. to process-side hygiene connections.

Mounting accessories

The mounting accessories include e.g. bracket and mounting bracket and are used for stable mounting of the sensor at the measuring point. The parts are available in various versions and sizes.

4 Mounting

4.1 General instructions

Ambient conditions

The instrument is suitable for standard and extended ambient conditions acc. to DIN/EN/IEC/ANSI/ISA/UL/CSA 61010-1. It can be used indoors as well as outdoors.

Process conditions

Note:
For safety reasons, the instrument must only be operated within the permissible process conditions. You can find detailed information on the process conditions in chapter "*Technical data*" of the operating instructions or on the type label.

Hence make sure before mounting that all parts of the instrument exposed to the process are suitable for the existing process conditions.

These are mainly:

- Active measuring component
- Process fitting
- Process seal

Process conditions in particular are:

- Process pressure
- Process temperature
- Chemical properties of the medium
- Abrasion and mechanical influences

4.2 Mounting versions

Ceil mounting

The simplest mounting of the device is on the ceiling. The matching ceiling adapter is included in the scope of delivery.

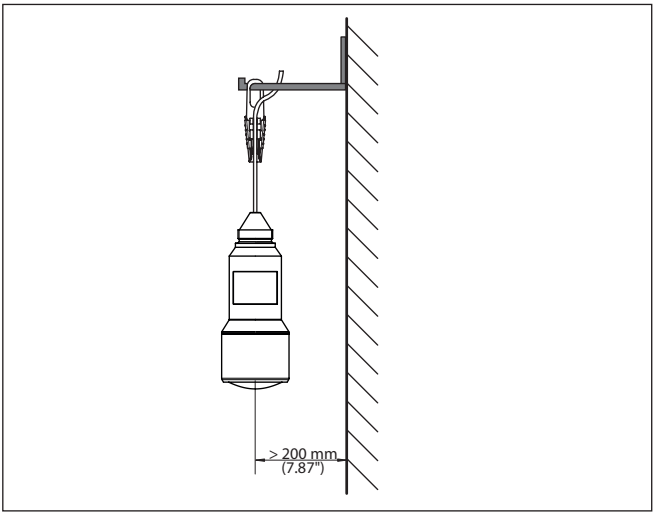

Fig. 5: Ceil mounting

Mounting bracket

For the wall mounting, a mounting bracket with opening for thread G1½, e.g. from the VEGA product range, is recommended. The mounting of the sensor in the bracket is carried out via a G1½ counter nut of plastic. Take note of chapter "*Mounting instructions*" for the recommended distance to the wall.

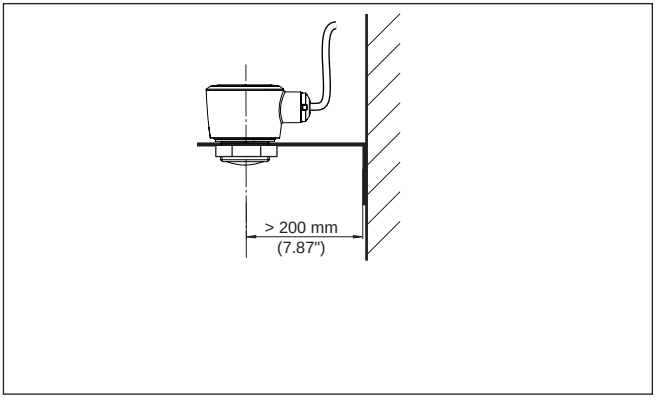

Fig. 6: Mounting via a mounting bracket

4.3 Mounting instructions

Polarisation

The emitted radar impulses of the radar sensor are electromagnetic waves. The polarisation is the direction of the electrical wave component. By turning the instrument in the mounting strap, the polarisation can be used to reduce the effects of false echoes.

The position of the polarisation is in the middle of the type label on the instrument.

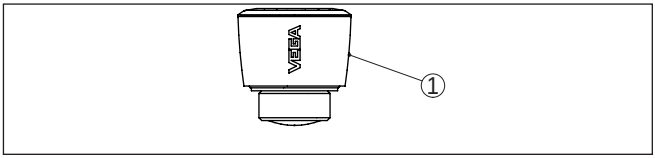

Fig. 7: Position of the polarisation

1 Middle of the type label

Installation position

When mounting the sensor, keep a distance of at least 200 mm (7.874 in) from the vessel wall. If the sensor is installed in the center of dished or round vessel tops, multiple echoes can arise. However, these can be suppressed by an appropriate adjustment (see chapter "*Setup*").

If you cannot maintain this distance, you should carry out a false signal suppression during setup. This applies particularly if buildup on the vessel wall is expected. In such cases, we recommend repeating the false signal suppression at a later date with existing buildup.

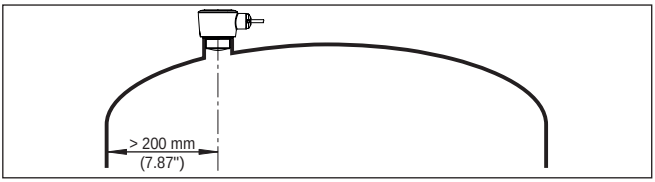

Fig. 8: Mounting of the radar sensor on round vessel tops

In vessels with conical bottom it can be advantageous to mount the sensor in the centre of the vessel, as measurement is then possible down to the bottom.

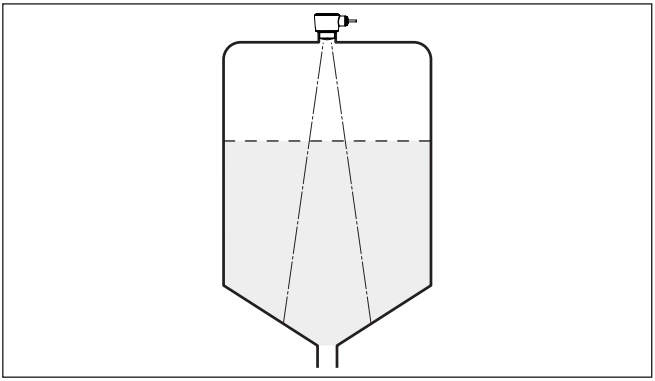

Fig. 9: Mounting of the radar sensor on vessels with conical bottom

Reference plane

The antenna edge of the device is the beginning of the measuring range and at the same time the reference plane for the min./max. adjustment, see following diagram:

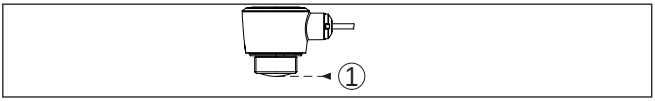

Fig. 10: Reference plane

1 Reference plane

Inflowing medium

Do not mount the instruments in or above the filling stream. Make sure that you detect the product surface, not the inflowing product.

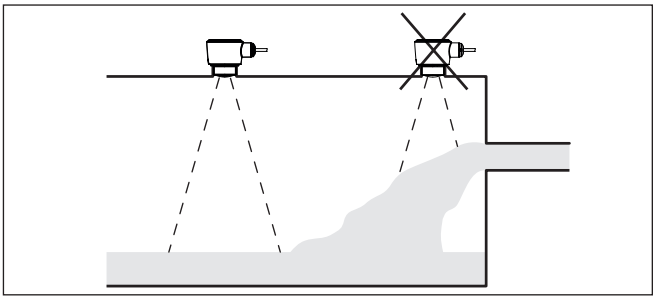

Fig. 11: Mounting of the radar sensor with inflowing medium

Mounting socket

For socket mounting, the socket should be as short as possible and its end rounded. This reduces false reflections from the socket.

With threaded socket, the antenna end should protrude at least 5 mm (0.2 in) out of the socket.

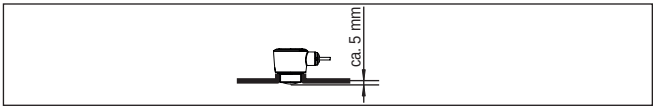

Fig. 12: Recommended threaded socket mounting of VEGAPULS C 22

If the reflective properties of the medium are good, you can mount VEGAPULS C 22 on sockets longer than the antenna. The socket end should be smooth and burr-free, if possible also rounded.

Note:
When mounting on longer sockets, we recommend carrying out a false signal suppression (see chapter "*Parameter adjustment*").

You will find recommended values for socket heights in the following illustration or the table. The values come from typical applications. Deviating from the proposed dimensions, also longer sockets are possible, however the local conditions must be taken into account.

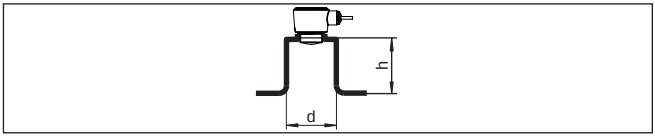

Fig. 13: Socket mounting with deviating socket dimensions

Socket diameter d		Socket length h	
40 mm	1½"	≤ 150 mm	≤ 5.9 in
50 mm	2"	≤ 200 mm	≤ 7.9 in
80 mm	3"	≤ 300 mm	≤ 11.8 in
100 mm	4"	≤ 400 mm	≤ 15.8 in
150 mm	6"	≤ 600 mm	≤ 23.6 in

Vessel installations

The mounting location of the radar sensor should be a place where no other equipment or fixtures cross the path of the radar signals.

Vessel installations, such as e.g. ladders, limit switches, heating spirals, struts, etc., can cause false echoes and impair the useful echo. Make sure when planning your measuring point that the radar sensor has a "clear view" to the measured product.

In case of existing vessel installations, a false signal suppression should be carried out during setup.

If large vessel installations such as struts or supports cause false echoes, these can be attenuated through supplementary measures. Small, inclined sheet metal baffles above the installations scatter the radar signals and prevent direct interfering reflections.

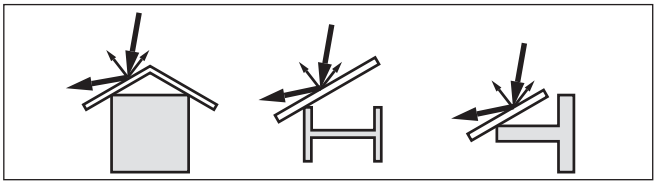

Fig. 14: Cover flat, large-area profiles with deflectors

Sensor orientation

In liquids, direct the sensor as perpendicular as possible to the product surface to achieve optimum measurement results.

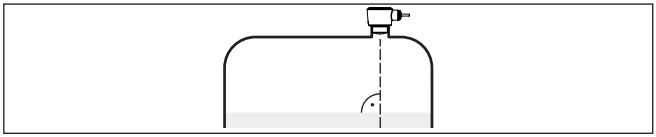

Fig. 15: Alignment in liquids

Agitators

If there are agitators in the vessel, a false signal suppression should be carried out with the agitators in motion. This ensures that the interfering reflections from the agitators are saved with the blades in different positions.

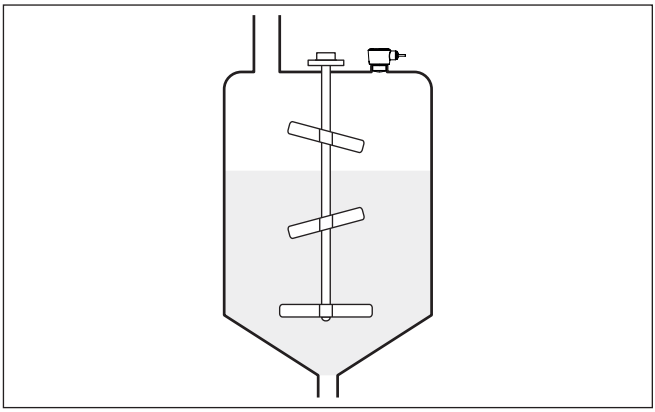

Fig. 16: Agitators

Foam generation

Through the action of filling, stirring and other processes in the vessel, compact foams which considerably damp the emitted signals may form on the product surface.

If foams lead to measurement errors, you should use the biggest possible radar antennas or sensors with guided radar.

4.4 Measurement setup - Flow

In general, the following must be observed while mounting the sensor:

- Mounting the sensor on the upstream or inlet side
- Installation in the centre of the flume and vertical to the liquid surface
- Distance to the overfall orifice or Venturi flume
- Min. distance to the max. height of damming for optimum accuracy: 250 mm (9.843 in)[1)]

Detailed project planning data can be found at the channel manufacturers and in the technical literature.

The measurement can be individually configured for the respective flume via a PC/notebook and PACTware/DTM.The measurement can be individually configured for the respective flume via a PC/notebook and PACTware/DTM.

The following examples serve as an overview for flow measurement.

[1)] At smaller distances the measuring accuracy is reduced, see Technical data.

Rectangular overfall

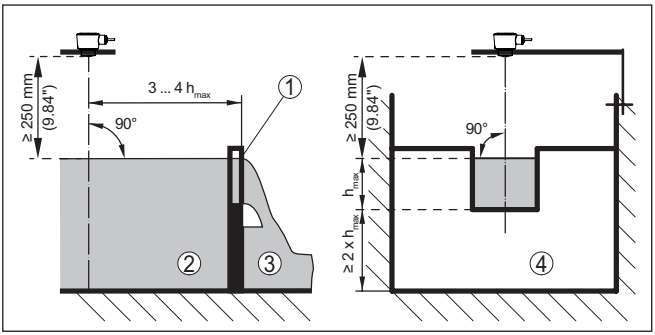

Fig. 17: Flow measurement with rectangular flume: $h_{max.}$ = max. filling of the rectangular flume

1 *Overflow orifice (side view)*
2 *Headwater*
3 *Tailwater*
4 *Overfall orifice (view from tailwater)*

Khafagi-Venturi flume

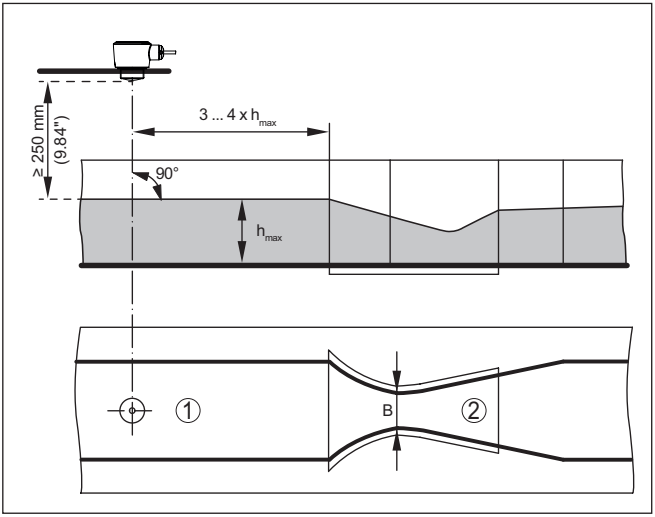

Fig. 18: Flow measurement with Khafagi-Venturi flume: $h_{max.}$ = max. filling of the flume; B = tightest constriction in the flume

1 *Position sensor*
2 *Venturi flume*

5 Connecting to power supply

5.1 Preparing the connection

Safety instructions

Always keep in mind the following safety instructions:

- Carry out electrical connection by trained, qualified personnel authorised by the plant operator
- If overvoltage surges are expected, overvoltage arresters should be installed

Warning:
Only connect or disconnect in de-energized state.

Voltage supply

The data for power supply are specified in chapter "*Technical data*".

Note:
Power the instrument via an energy-limited circuit (power max. 100 W) acc. to IEC 61010-1, e.g.

- Class 2 power supply unit (acc. to UL1310)
- SELV power supply unit (safety extra-low voltage) with suitable internal or external limitation of the output current

Keep in mind the following additional factors that influence the operating voltage:

- Lower output voltage of the power supply unit under nominal load (e.g. with a sensor current of 20.5 mA or 22 mA in case of fault)
- Influence of additional instruments in the circuit (see load values in chapter "*Technical data*")

Connection cable

The instrument is connected with standard two-wire cable. If electromagnetic interference is expected which is above the test values of EN 61326-1 for industrial areas, screened cable should be used.

Screened cable generally necessary in HART multidrop mode.

Cable screening and grounding

If shielded cable is required, we recommend that the cable screening be connected to ground potential on one side of the supply side.

In Ex systems, the grounding is carried out according to the installation regulations.

5.2 Wiring plan

Wire assignment, connection cable

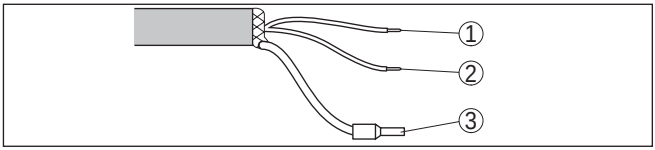

Fig. 19: Wire assignment in permanently connected connection cable

58344-EN-191014

	Wire colour	Function	Polarity
1	Brown	Voltage supply, signal output	+
2	Blue	Voltage supply, signal output	-
3		Shielding	

5.3 Switch-on phase

After connection to the power supply, the device carries out a self-test:

- Internal check of the electronics
- Output signal is set to failure

The current measured value is then output on the signal cable.

6 Access protection

6.1 Bluetooth radio interface

Devices with a Bluetooth radio interface are protected against unwanted access from outside. This means that only authorized persons can receive measured and status values and change device settings via this interface.

Bluetooth access code

A Bluetooth access code is required to establish Bluetooth communication via the adjustment tool (smartphone/tablet/notebook). This code must be entered once when Bluetooth communication is established for the first time in the operating device. It is then stored in the adjustment tool and does not have to be entered again.

The Bluetooth access code is individual for each device. It is printed on the device housing and is also supplied with the device in the information sheet "*PINs and Codes*". It can be changed by the user after the first connection has been established. If the Bluetooth access code has not been entered correctly, a new entry can only be made after a waiting period has elapsed. The waiting time increases with each additional incorrect entry.

If the user has a "*myVEGA*" account, the Bluetooth access code is additionally stored in his account under "*PINs and Codes*". This greatly simplifies the use of additional adjustment tools, as all Bluetooth access codes are automatically synchronized when connected to the "*myVEGA*" account

Emergency Bluetooth unlock code

The emergency Bluetooth unlock code enables Bluetooth communication to be established in the event that the Bluetooth access code is no longer known. It can't be changed. The "Emergency Bluetooth unlock code" can also be found in information sheet "*Emergency codes*". If this document is lost, the emergency Bluetooth unlock code can be retrieved from your VEGA contact person after legitimation. The storage and transmission of Bluetooth access codes is always encrypted (SHA 56 algorithm).

6.2 Protection of the parameterization

The settings (parameters) of the device can be protected against unwanted changes. The device is not locked on delivery, all settings can be made.

Device code

To protect the parameterization, the device can be locked by the user with the aid of a freely selectable device code. The settings (parameters) can then only be read out, but not changed. The device code is also stored in the adjustment tool. However, it must be re-entered for each unlocking. When using the VEGA Tools app, the stored device code is then suggested to the user for unlocking.

If the user has a "*myVEGA*" account, the device code is additionally stored in his account under "*PINs and Codes*". This greatly simplifies the setup of additional operating devices, as all device codes are automatically synchronized when connected to the "*myVEGA*" account.

Emergency device unlock code

The emergency device unlock code allows unlocking the devices in case the device code is no longer known. It can't be changed. The emergency device unlock code can also be found on the supplied information sheet "*Emergency codes*". If this document is lost, the emergency device unlock code can be retrieved from your VEGA contact person after legitimation. The storage and transmission of the device codes is always encrypted (SHA 256 algorithm).

7 Setup with smartphone/tablet (Bluetooth)

7.1 Preparations

System requirements

Make sure that your smartphone/tablet meets the following system requirements:

- Operating system: iOS 8 or newer
- Operating system: Android 4.3 or newer
- Bluetooth 4.0 LE or newer

Download the VEGA Tools app from the "*Apple App Store*", "*Google Play Store*" or "*Baidu Store*" to your smartphone or tablet.

7.2 Connecting

Connecting …

Start the VEGA Tools app and select the function "Setup". The smartphone/tablet searches automatically for Bluetooth-capable instruments in the area.

The message "*Searching …*" is displayed.

The devices found are listed and the search is automatically continued continuously.

Select the requested instrument in the device list.

Authenticate

For the first connection, the operating device and the sensor must authenticate each other. After successful authentication, the next connection functions without authentication.

iOS
During the pairing process, the following message is displayed: "*Pairing request (Bluetooth), e.g. 12345678 wants to pair with your iPad/iPhone*". Press "Pair".

Android
The coupling passes through automatically.

Enter Bluetooth access code

For authentication, enter the 6-digit Bluetooth access code in the next menu window or scan it via the bar code (DataMatrix). You can find the code on the outside of the device housing and on the information sheet "*PINs and Codes*" in the device packaging.

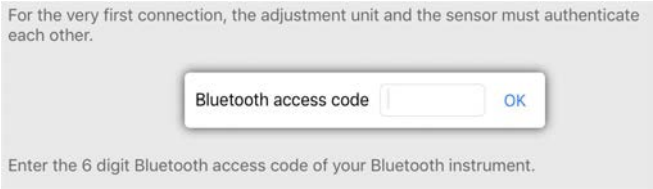

Fig. 20: Enter Bluetooth access code

Note:
If an incorrect code is entered, the code can only be entered again after a delay time. This time gets longer after each incorrect entry.

58344-EN-191014

The message "*Waiting for authentication*" is displayed on the smartphone/tablet.

Connected

After connection, the sensor adjustment menu is displayed on the respective adjustment instrument.

If the Bluetooth connection is interrupted, e.g. due to a too large distance between the two devices, this is displayed on the operating device. The message disappears when the connection is restored.

Change device code

Parameter adjustment of the device is only possible if the parameter protection is deactivated. When delivered, parameter protection is deactivated by default and can be activated at any time.

It is recommended to enter a personal 6-digit device code. To do this, go to menu "*Extended functions*", "*Access protection*", menu item "*Protection of the parameter adjustment*".

7.3 Parameter adjustment

Enter parameters

The sensor adjustment menu is divided into two areas, which are arranged next to each other or one below the other, depending on the adjustment tool.

- Navigation section
- Menu item display

The selected menu item can be recognized by the colour change.

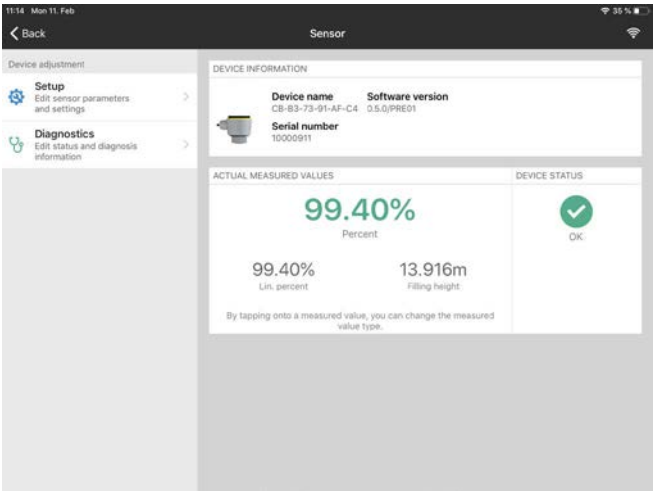

Fig. 21: Example of an app view - Setup sensor adjustment

Enter the requested parameters and confirm via the keyboard or the editing field. The settings are then active in the sensor.

Close the app to terminate connection.

8 Setup with PC/notebook (Bluetooth)

8.1 Preparations

System requirements

Make sure that your PC/notebook meets the following system requirements:

- Operating system Windows 10
- DTM Collection 12/2019 or newer
- Bluetooth 4.0 LE or newer

Activate Bluetooth connection

Activate the Bluetooth connection via the VEGA project assistant.

Note:
Older systems do not always have an integrated Bluetooth LE. In these cases, a Bluetooth USB adapter is required.

Activate the Bluetooth USB adapter via the VEGA project assistant (see supplementary instructions "*Bluetooth USB adapter*").

After activating the integrated Bluetooth or the Bluetooth USB adapter, devices with Bluetooth are found and created in the project tree.

8.2 Connecting

Connecting …

Select the requested sensor for the online parameter adjustment in the project tree.

Authenticate

The window "*Authentication*" is displayed. For the first connection, the operating device and the sensor must authenticate each other. After successful authentication, the next connection functions without authentication.

Enter Bluetooth access code

For authentication, enter in the next menu window the 6-digit Bluetooth access code:

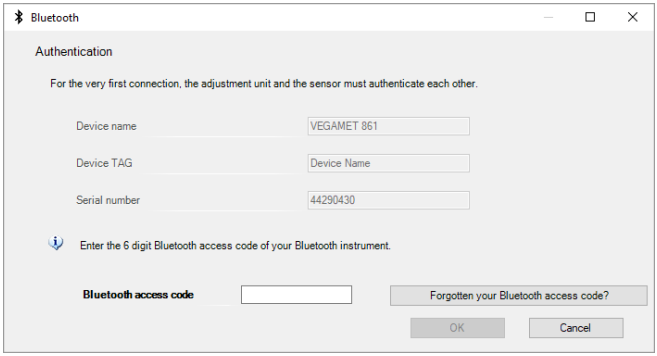

Fig. 22: Enter Bluetooth access code

You can find the code on the outside of the device housing and on the information sheet "*PINs and Codes*" in the device packaging.

58344-EN-191014

Note:
If an incorrect code is entered, the code can only be entered again after a delay time. This time gets longer after each incorrect entry.

The message "*Waiting for authentication*" is displayed on the PC/notebook.

Connected

After connection, the sensor DTM appears.

If the connection is interrupted, e.g. due to a too large distance between sensor and operating device, this is displayed on the operating device. The message disappears when the connection is restored.

Change device code

Parameter adjustment of the device is only possible if the parameter protection is deactivated. When delivered, parameter protection is deactivated by default and can be activated at any time.

It is recommended to enter a personal 6-digit device code. To do this, go to menu "*Extended functions*", "*Access protection*", menu item "*Protection of the parameter adjustment*".

8.3 Parameter adjustment

Prerequisites

For parameter adjustment of the instrument via a Windows PC, the configuration software PACTware and a suitable instrument driver (DTM) according to FDT standard are required. The latest PACTware version as well as all available DTMs are compiled in a DTM Collection. The DTMs can also be integrated into other frame applications according to FDT standard.

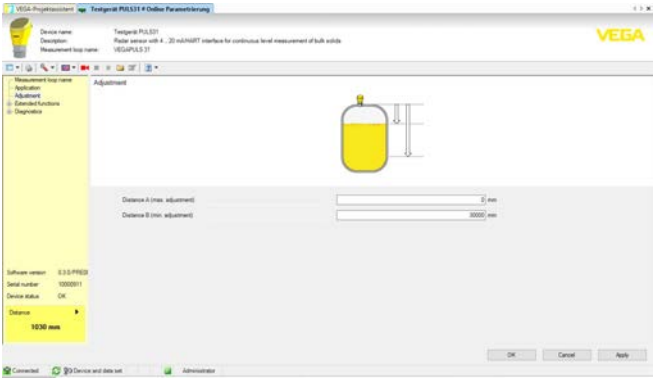

Fig. 23: Example of a DTM view - Setup, sensor adjustment

9 Setup with PC/notebook (VEGACONNECT)

9.1 Connect the PC

Via interface adapter to the signal cable

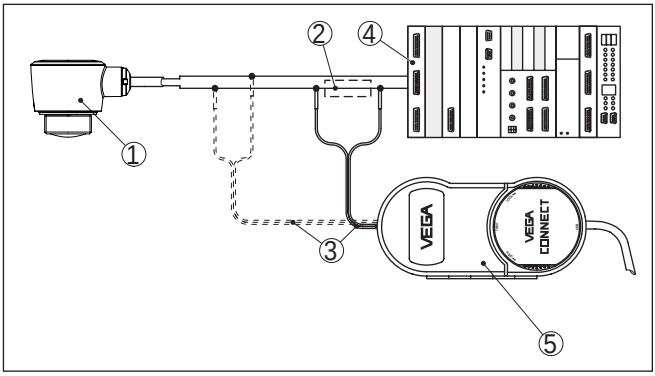

Fig. 24: Connecting the PC to the signal cable

1 *Sensor*
2 *HART resistance 250 Ω (optional depending on evaluation)*
3 *Connection cable with 2 mm pins and terminals*
4 *Processing system/PLC/Voltage supply*
5 *Interface adapter VEGACONNECT*

Note:
With power supply units with integrated HART resistance (internal resistance approx. 250 Ω), an additional external resistance is not necessary. This applies, e.g. to the VEGA instruments VEGATRENN 149A, VEGAMET 381, VEGAMET 391. Common Ex separators are also usually equipped with a sufficient current limiting resistance. In such cases, the interface converter can be connected parallel to the 4 … 20 mA cable (dashed line in the previous illustration).

Via interface adapter to the VEGAMET controller

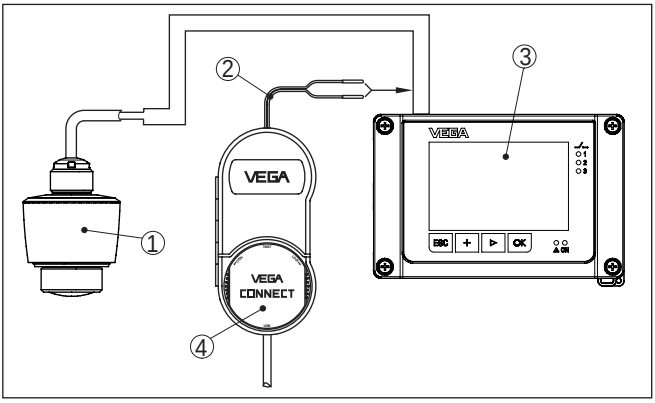

Fig. 25: Connection of the PC to the VEGAMET controller

1 Sensor
2 Connection cable with 2 mm pins
3 Controller, e.g. VEGAMET 381
4 Interface adapter VEGACONNECT

9.2 Parameter adjustment with PACTware

Prerequisites

For parameter adjustment of the sensor via a Windows PC, the configuration software PACTware and a suitable instrument driver (DTM) according to FDT standard are required. The up-to-date PACTware version as well as all available DTMs are compiled in a DTM Collection. The DTMs can also be integrated into other frame applications according to FDT standard.

Note:
To ensure that all instrument functions are supported, you should always use the latest DTM Collection. Furthermore, not all described functions are included in older firmware versions. You can download the latest instrument software from our homepage. A description of the update procedure is also available in the Internet.

Further setup steps are described in the operating instructions manual "*DTM Collection/PACTware*" attached to each DTM Collection and which can also be downloaded from the Internet. Detailed descriptions are available in the online help of PACTware and the DTMs.

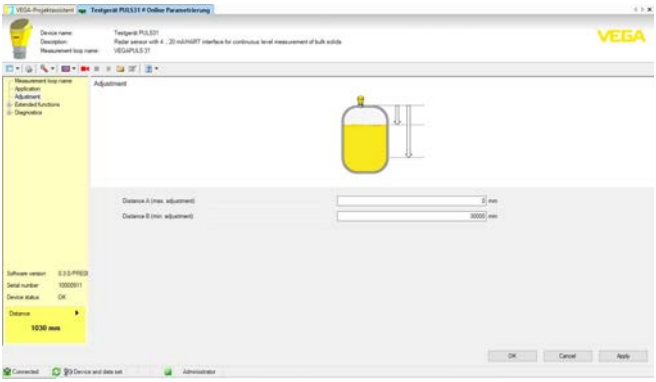

Fig. 26: Example of a DTM view

Standard/Full version

All device DTMs are available as a free-of-charge standard version and as a full version that must be purchased. In the standard version, all functions for complete setup are already included. An assistant for simple project configuration simplifies the adjustment considerably. Saving/printing the project as well as import/export functions are also part of the standard version.

In the full version there is also an extended print function for complete project documentation as well as a save function for measured value and echo curves. In addition, there is a tank calculation program as well as a multiviewer for display and analysis of the saved measured value and echo curves.

The standard version is available as a download under www.vega.com/downloads and "*Software*". The full version is available on CD from the agency serving you.

9.3 Saving the parameterisation data

We recommend documenting or saving the parameterisation data via PACTware. That way the data are available for multiple use or service purposes.

10 Menu overview

Main menu

Menu item	Selection	Basic settings
Measurement loop name	Alphanumeric characters	Sensor
Application liquid	Storage tank, agitator tank, dosing tank, pumping station/pump shaft, rain overflow basin, tank/collection basin, plastic tank (measurement through tank top), mobile plastic tank (IBC), level measurement in waters, flow measurement flume/overflow, demonstration	Storage tank
Application bulk solid	Silo (slim and high), bunker (large volume), stockpile (point measurement/profile detection), crusher, demonstration	Silo (slender and high)
Units	Distance unit of the device Temperature unit of the instrument	Distance in m Temperature in °C
Adjustment	Max. adjustment (distance A) Min. adjustment (distance B)	Max. adjustment 15,000 m Min. adjustment 0,000 m

Extended functions

Menu item	Selection	Basic settings
Damping	Integration time	0 s
Current output	Output characteristics	4 … 20 mA
	Current range	Min. current 3.8 mA and max. current 20.5 mA
	Reaction when malfunctions occur	Failure mode < 3.6 mA
Linearisation	Linearisation type	Linear
Scaling	Scaling size Scaling unit Scaling format	0 % correspond to 0 l 100 % correspond to 100 l
Display	Menu language Displayed value Backlight	- Filling height On
Access protection	Bluetooth access code	-
	Protection of the parameterization	Deactivated

Menu item	Selection	Basic settings
False signal suppression	False signal suppression	0 m
	Sounded distance to the medium	0 m
HART variables	First HART value (PV) Second HART value (SV) Third HART value (TV) Fourth HART value (QV) Long TAG Message	Lin. percent Distance Measurement reliability Electronics temperature
Reset	Delivery status, basic settings	-
Status signals	Function check Maintenance requirement Out of specification	On Off Off

Diagnostics

Menu item	Selection	Basic settings
Status	Sensor status Measured value status Status output HART Device Status Status additional measured values	-
Echo curve	Indication of echo curve	-
Peak value indicator	Pointer function distance, measurement reliability, meas. rate, electronic temperature	-
Measured values	Measured values Additional measured values Outputs	-
Sensor information	Device name, serial number, hardware/software version, device revision, factory calibration date	-
Sensor characteristics	Sensor features from order text	-
Simulation	Measured value Simulation value	-
Measured value memory (DTM)	Indication measured value memory from DTM	

58344-EN-191014

11 Diagnostics and servicing

11.1 Maintenance

Maintenance

If the device is used properly, no special maintenance is required in normal operation.

Precaution measures against buildup

In some applications, buildup on the antenna system can influence the measuring result. Depending on the sensor and application, take measures to avoid heavy soiling of the antenna system. If necessary, clean the antenna system in certain intervals.

Cleaning

The cleaning helps that the type label and markings on the instrument are visible.

Take note of the following:

- Use only cleaning agents which do not corrode the housings, type label and seals
- Use only cleaning methods corresponding to the housing protection rating

11.2 Rectify faults

Reaction when malfunction occurs

The operator of the system is responsible for taking suitable measures to rectify faults.

Causes of malfunction

The device offers maximum reliability. Nevertheless, faults can occur during operation. These may be caused by the following, e.g.:

- Sensor
- Process
- Voltage supply
- Signal processing

Fault rectification

The first measures are:

- Evaluation of fault messages
- Checking the output signal
- Treatment of measurement errors

A smartphone/tablet with the VEGA Tools app or a PC/notebook with the software PACTware and the suitable DTM offer you further comprehensive diagnostic possibilities. In many cases, the causes can be determined in this way and the faults eliminated.

Reaction after fault rectification

Depending on the reason for the fault and the measures taken, the steps described in chapter "*Setup*" must be carried out again or must be checked for plausibility and completeness.

24 hour service hotline

Should these measures not be successful, please call in urgent cases the VEGA service hotline under the phone no. **+49 1805 858550**.

The hotline is also available outside normal working hours, seven days a week around the clock.

Since we offer this service worldwide, the support is provided in English. The service itself is free of charge, the only costs involved are the normal call charges.

11.3 Diagnosis, fault messages

4 … 20 mA signal

Connect a multimeter in the suitable measuring range according to the wiring plan. The following table describes possible errors in the current signal and helps to eliminate them:

Error	Cause	Rectification
4 … 20 mA signal not stable	Fluctuating measured value	Set damping
4 … 20 mA signal missing	Electrical connection faulty	Check connection, correct, if necessary
	Voltage supply missing	Check cables for breaks; repair if necessary
	Operating voltage too low, load resistance too high	Check, adapt if necessary
Current signal greater than 22 mA, less than 3.6 mA	Sensor electronics defective	Replace device or send in for repair depending on device version

11.4 Status messages according to NE 107

The instrument features self-monitoring and diagnostics according to NE 107 and VDI/VDE 2650. In addition to the status messages in the following tables there are more detailed error messages available under the menu item "*Diagnostics*" via the respective adjustment module.

Status messages

The status messages are divided into the following categories:

- Failure
- Function check
- Out of specification
- Maintenance requirement

and explained by pictographs:

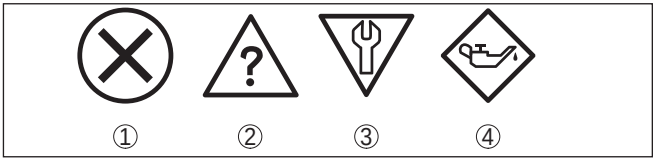

Fig. 27: Pictographs of the status messages

1 Failure - red
2 Out of specification - yellow
3 Function check - orange
4 Maintenance - blue

Failure: Due to a malfunction in the instrument, a fault message is output.

This status message is always active. It cannot be deactivated by the user.

Function check: The instrument is being worked on, the measured value is temporarily invalid (for example during simulation).

This status message is inactive by default.

Out of specification: The measured value is unreliable because an instrument specification was exceeded (e.g. electronics temperature).

This status message is inactive by default.

Maintenance: Due to external influences, the instrument function is limited. The measurement is affected, but the measured value is still valid. Plan in maintenance for the instrument because a failure is expected in the near future (e.g. due to buildup).

This status message is inactive by default.

Failure

Code Text message	Cause	Rectification	DevSpec State in CMD 48
F013 no measured value available	No measured value in the switch-on phase or during operation	Check or correct installation and/or parameter settings Clean the antenna system	Byte 5, Bit 0 of Byte 0 … 5
F017 Adjustment span too small	Adjustment not within specification	Change adjustment according to the limit values (difference between min. and max. ≥ 10 mm)	Byte 5, Bit 1 of Byte 0 … 5
F025 Error in the linearization table	Index markers are not continuously rising, for example illogical value pairs	Check linearisation table Delete table/Create new	Byte 5, Bit 2 of Byte 0 … 5
F036 No operable software	Checksum error if software update failed or aborted	Repeat software update Send instrument for repair	Byte 5, Bit 3 of Byte 0 … 5
F040 Error in the electronics	Limit value exceeded in signal processing Hardware error	Restart instrument Send instrument for repair	Byte 5, Byte 5, Bit 4 of Byte 0 … 5
F080 General software error	General software error	Restart instrument	Byte 5, Byte 5, Bit 5 of Byte 0 … 5
F105 Determine measured value	The instrument is still in the start phase, the measured value could not yet be determined	Wait for the end of the switch-on phase Duration up to 3 minutes depending on the measurement environment and parameter settings	Byte 5, Byte 5, Bit 6 of Byte 0 … 5
F260 Error in the calibration	Checksum error in the calibration values Error in the EEPROM	Send instrument for repair	Byte 4, Bit 0 of Byte 0 … 5
F261 Error in the instrument settings	Error during setup False signal suppression faulty Error when carrying out a reset	Repeat setup Carry out a reset	Byte 4, Bit 1 of Byte 0 … 5

Code Text message	Cause	Rectification	DevSpec State in CMD 48
F265 Measurement function disturbed	Program sequence of the measuring function disturbed	Device restarts automatically	Byte 4, Bit 3 of Byte 0 … 5

Function check

Code Text message	Cause	Rectification	DevSpec State in CMD 48
C700 Simulation active	A simulation is active	Finish simulation Wait for the automatic end after 60 mins.	"Simulation Active" in "Standardized Status 0"

Out of specification

Code Text message	Cause	Rectification	DevSpec State in CMD 48
S600 Impermissible electronics temperature	Temperature of the electronics in the non-specified range	Check ambient temperature Insulate electronics	Byte 23, Bit 4 of Byte 14 … 24
S601 Overfilling	Danger of vessel overfilling	Make sure that there is no further filling Check level in the vessel	Byte 23, Bit 5 of Byte 14 … 24
S603 Impermissible operating voltage	Terminal voltage too small	Check terminal voltage, increase operating voltage	Byte 23, Bit 6 of Byte 14 … 24

Maintenance

Code Text message	Cause	Rectification	DevSpec State in CMD 48
M500 Error in the delivery status			Bit 0 of Byte 14 … 24
M501 Error in the delivery status			Bit 1 of Byte 14 … 24
M504 Error at a device interface	Hardware defect	Check connections Exchanging the electronics Send instrument for repair	Bit 4 of Byte 14 … 24
M505 No echo available	Sensor does not detect an echo during operation Antenna dirty or defective	Clean the antenna Use a more suitable antenna/sensor Remove possible false echoes Optimize sensor position and orientation	Bit 5 of Byte 14 … 24

Code Text message	Cause	Rectification	DevSpec State in CMD 48
M507 Error in the instrument settings	Error during setup Error when carrying out a reset False signal suppression faulty	Carry out reset and repeat setup	Bit 7 of Byte 14 … 24
M508 Data error in program memory Bluetooth controller			Bit 8 of Byte 14 … 24
M509 Software update			Bit 9 of Byte 14 … 24
M510 No communication with the sensor			Bit 10 of Byte 14 … 24

11.5 Treatment of measurement errors

The tables below give typical examples of application-related measurement errors.

The images in column "*Error description*" show the actual level as a dashed line and the output level as a solid line.

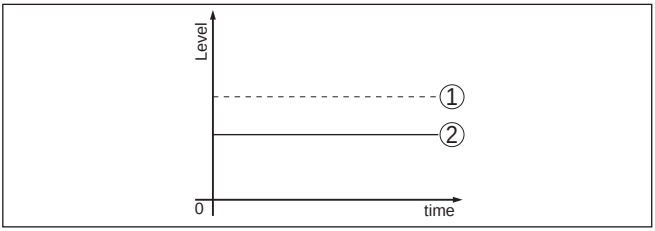

1 Real level
2 Level displayed by the sensor

Note:
If the output level is constant, the cause could also be the fault setting of the current output to "*Hold value*".

If the level is too low, the reason could be a line resistance that is too high

Liquids: Measurement error at constant level

Fault description	Cause	Rectification
Measured value shows a too low or too high level 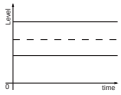	Min./max. adjustment not correct	Adapt min./max. adjustment
	Incorrect linearisation curve	Adapt linearisation curve

Fault description	Cause	Rectification
Measured value jumps towards 100 % 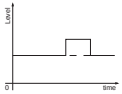	Due to the process, the amplitude of the level echo sinks A false signal suppression was not carried out	Carry out a false signal suppression
	Amplitude or position of a false signal has changed (e.g. condensation, build-up); false signal suppression no longer matches actual conditions	Determine the reason for the changed false signals, carry out false signal suppression, e.g. with condensation.

Liquids: Measurement error during filling

Fault description	Cause	Rectification
Measured value remains unchanged during filling 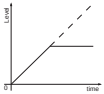	False signals in the close range too big or level echo too small Strong foam or spout generation Max. adjustment not correct	Eliminate false signals in the close range Check measuring point: Antenna should protrude out of the threaded mounting socket, possible false echoes through flange socket? Remove contamination on the antenna In case of interferences due to installations in the close range, change polarisation direction Create a new false signal suppression Adapt max. adjustment
Measured value jumps towards 0 % during filling 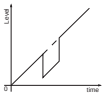	The level echo cannot be distinguished from the false signal at a false signal position (jumps to multiple echo)	In case of interferences due to installations in the close range: Change polarisation direction Chose a more suitable installation position
Measured value jumps towards 100 % during filling 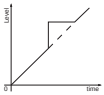	Due to strong turbulence and foam generation during filling, the amplitude of the level echo sinks. Measured value jumps to false signal	Carry out a false signal suppression
Measured value jumps sporadically to 100 % during filling 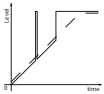	Varying condensation or contamination on the antenna	Carry out a false signal suppression or increase false signal suppression with condensation/contamination in the close range by editing
Measured value jumps to ≥ 100 % or 0 m distance 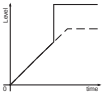	Level echo is no longer detected in the close range due to foam generation or false signals in the close range. The sensor goes into overfill protection mode. The max. level (0 m distance) as well as the status message "Overfill protection" are output.	Check measuring point: Antenna should protrude out of the threaded mounting socket, possible false echoes through flange socket? Remove contamination on the antenna

58344-EN-191014

Liquids: Measurement error during emptying

Fault description	Cause	Rectification
Measured value remains unchanged in the close range during emptying	False signal larger than the level echo Level echo too small	Check measuring point: Antenna should protrude out of the threaded mounting socket, possible false echoes through flange socket? Remove contamination on the antenna In case of interferences due to installations in the close range: Change polarisation direction After eliminating the false signals, the false signal suppression must be deleted. Carry out a new false signal suppression
Measured value jumps sporadically towards 100 % during emptying 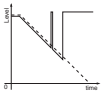	Varying condensation or contamination on the antenna	Carry out false signal suppression or increase false signal suppression in the close range by editing With bulk solids, use radar sensor with purging air connection

Bulk solids: Measurement error at constant level

Fault description	Cause	Rectification
Measured value shows a too low or too high level 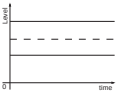	Min./max. adjustment not correct	Adapt min./max. adjustment
	Incorrect linearisation curve	Adapt linearisation curve
Measured value jumps towards 100 % 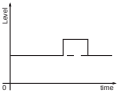	Due to the process, the amplitude of the product echo decreases A false signal suppression was not carried out	Carry out a false signal suppression
	Amplitude or position of a false signal has changed (e.g. condensation, build-up); false signal suppression no longer matches actual conditions	Determine the reason for the changed false signals, carry out false signal suppression, e.g. with condensation.

Bulk solids: Measurement error during filling

Fault description	Cause	Rectification
Measured value jumps towards 0 % during filling 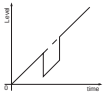	The level echo cannot be distinguished from the false signal at a false signal position (jumps to multiple echo)	Remove/reduce false signal: minimize interfering installations by changing the polarization direction Chose a more suitable installation position
	Transverse reflection from an extraction funnel, amplitude of the transverse reflection larger than the level echo	Direct sensor to the opposite funnel wall, avoid crossing with the filling stream

Fault description	Cause	Rectification
Measured value fluctuates around 10 … 20 % 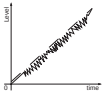	Various echoes from an uneven product surface, e.g. a material cone	Check parameter "Type of medium" and adapt, if necessary Optimize installation position and sensor orientation
	Reflections from the product surface via the vessel wall (deflection)	Select a more suitable installation position, optimize sensor orientation, e.g. with a swivelling holder
Measured value jumps sporadically to 100 % during filling 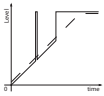	Changing condensation or contamination on the antenna	Carry out a false signal suppression or increase false signal suppression with condensation/contamination in the close range by editing

Bulk solids: Measurement error during emptying

Fault description	Cause	Rectification
Measured value remains unchanged in the close range during emptying	False signal greater than level echo or level echo too small	Eliminate false signals in the close range. Check: Antenna must protrude out of the socket Remove contamination on the antenna Minimize interfering installations in the close range by changing the polarization direction After eliminating the false signals, the false signal suppression must be deleted. Carry out a new false signal suppression
Measured value jumps sporadically towards 100 % during emptying 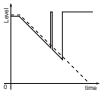	Changing condensation or contamination on the antenna	Carry out false signal suppression or increase false signal suppression in the close range by editing
Measured value fluctuates around 10 … 20 % 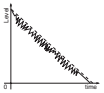	Various echoes from an uneven product surface, e.g. an extraction funnel	Check parameter "Type of medium" and adapt, if necessary
	Reflections from the product surface via the vessel wall (deflection)	Optimize installation position and sensor orientation

11.6 Software update

The device software can be updated in the following ways:

- HART signal
- Bluetooth

The following components are required:

58344-EN-191014

- Instrument
- Voltage supply
- Interface adapter VEGACONNECT
- PC with PACTware/DTM and Bluetooth USB adapter
- Current instrument software as file

You can find the current instrument software as well as detailed information on the procedure in the download area of our homepage: www.vega.com.

Caution:
Instruments with approvals can be bound to certain software versions. Therefore make sure that the approval is still effective after a software update is carried out.

You can find detailed information in the download area at www.vega.com.

11.7 How to proceed if a repair is necessary

You can find an instrument return form as well as detailed information about the procedure in the download area of our homepage. By doing this you help us carry out the repair quickly and without having to call back for needed information.

In case of repair, proceed as follows:

- Print and fill out one form per instrument
- Clean the instrument and pack it damage-proof
- Attach the completed form and, if need be, also a safety data sheet outside on the packaging
- Ask the agency serving you to get the address for the return shipment. You can find the agency on our homepage.

12 Dismount

12.1 Dismounting steps

Warning:
Before dismounting, be aware of dangerous process conditions such as e.g. pressure in the vessel or pipeline, high temperatures, corrosive or toxic media etc.

Take note of chapters "*Mounting*" and "*Connecting to voltage supply*" and carry out the listed steps in reverse order.

12.2 Disposal

The device is made of recyclable materials. For this reason, it should be disposed of by a specialist recycling company. Observe the applicable national regulations.

13 Certificates and approvals

13.1 Environmental instructions

Objective and measures

Protection of the environment is one of our most important duties. That is why we have introduced an environment management system with the goal of continuously improving company environmental protection. The environment management system is certified according to DIN EN ISO 14001.

Please help us fulfil this obligation by observing the environmental instructions in this manual:

- Chapter "*Packaging, transport and storage*"
- Chapter "*Disposal*"

14 Supplement

14.1 Technical data

Note for approved instruments

The technical data in the respective safety instructions which are included in delivery are valid for approved instruments (e.g. with Ex approval). These data can differ from the data listed herein, for example regarding the process conditions or the voltage supply.

All approval documents can be downloaded from our homepage.

Materials and weights	
Materials, wetted parts	
– Antenna, process fitting	PVDF
– Process seal	FKM
Materials, non-wetted parts	
– Housing	PVDF
– Cable entry seal	NBR
– Connection cable	PUR
Weight	
– Instrument	0.7 kg (1.543 lbs)
– Connection cable	0.1 kg/m
Process fitting	Thread G1½, R1½, 1½ NPT
Mounting connection	Thread G1, R1, 1 NPT
Max. torque mounting boss	25 Nm (18.44 lbf ft)

Input variable	
Measured variable	The measured variable is the distance between the antenna edge of the sensor and the product surface. The antenna edge is also the reference plane for the measurement.

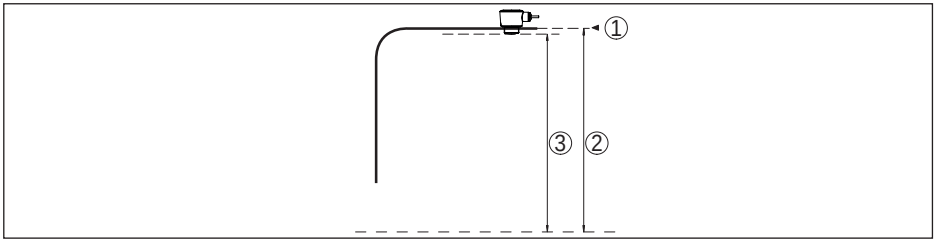

Fig. 28: Data of the input variable

1 Reference plane
2 Measured variable, max. measuring range

Max. measuring range[2)]	15 m (49.21 ft)
Recommended measuring range[3)]	up to 10 m (32.81 ft)

[2)] Depending on application and medium
[3)] With bulk solids

58344-EN-191014

Switch-on phase	
Run-up time with operating voltage U_B	< 10 s
Staring current (for run-up time)	≤ 3.6 mA

Output variable	
Output signal	4 … 20 mA/HART
Range of the output signal	3.8 … 20.5 mA/HART (default setting)
Signal resolution	0.3 µA
Resolution, digital	1 mm (0.039 in)
Fault signal, current output (adjustable)	mA-value unchanged 20.5 mA, 22 mA, < 3.6 mA
Max. output current	22 mA
Starting current	≤ 3.6 mA; ≤ 10 mA for 5 ms after switching on
Load	See load resistance under Power supply
Damping (63 % of the input variable), adjustable	0 … 999 s
HART output values according to HART 7.0[4]	
– PV (Primary Value)	Lin. percent
– SV (Secondary Value)	Distance
– TV (Third Value)	Measurement reliability
– QV (Fourth Value)	Electronics temperature
Fulfilled HART specification	7.0
Further information on Manufacturer ID, Device ID, Device Revision	See website of HART Communication Foundation

Deviation (according to DIN EN 60770-1)	
Process reference conditions according to DIN EN 61298-1	
– Temperature	+18 … +30 °C (+64 … +86 °F)
– Relative humidity	45 … 75 %
– Air pressure	860 … 1060 mbar/86 … 106 kPa (12.5 … 15.4 psig)
Installation reference conditions	
– Distance to installations	> 200 mm (7.874 in)
– Reflector	Flat plate reflector
– False reflections	Biggest false signal, 20 dB smaller than the useful signal
Deviation with liquids	≤ 2 mm (meas. distance > 0.25 m/0.8202 ft)
Non-repeatability[5]	≤ 2 mm
Deviation with bulk solids	The values depend to a great extent on the application. Binding specifications are thus not possible.

[4] Default values can be assigned individually.
[5] Already included in the meas. deviation

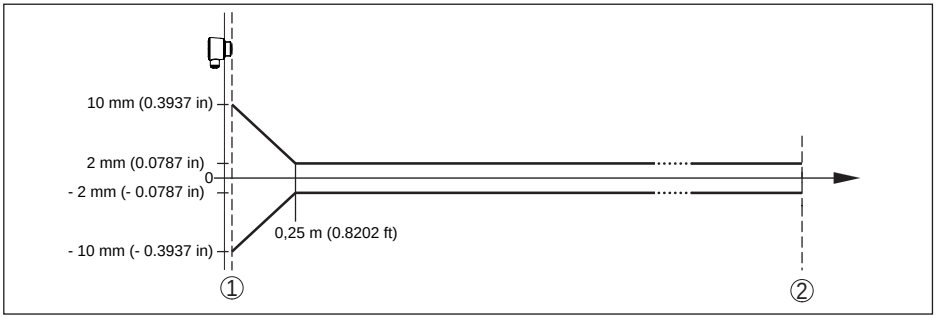

Fig. 29: Deviation under reference conditions

1 Antenna edge, reference plane
2 Recommended measuring range

Variables influencing measurement accuracy

Specifications apply to the digital measured value

Temperature drift - Digital output	< 3 mm/10 K, max. 10 mm

Specifications apply also to the current output

Temperature drift - Current output	< 0.03 %/10 K or max. 0.3 % relating to the 16.7 mA span
Deviation in the current output due to digital/analogue conversion	< 15 µA
Additional deviation through electromagnetic interference	
– According to NAMUR NE 21	< 80 µA
– According to EN 61326-1	None
– According to IACS E10 (shipbuilding)/ IEC 60945	< 250 µA

Characteristics and performance data

Measuring frequency	W-band (80 GHz technology)
Measuring cycle time[6)]	≤ 250 ms
Step response time[7)]	≤ 3 s
Beam angle[8)]	8°
Emitted HF power (depending on the parameter setting)[9)]	
– Average spectral transmission power density	-3 dBm/MHz EIRP
– Max. spectral transmission power density	+34 dBm/50 MHz EIRP
– Max. power density at a distance of 1 m	< 3 µW/cm²

6) With operating voltage U_B ≥ 24 V DC
7) Time span after a sudden distance change from 1 m to 5 m until the output signal reaches 90 % of the final value for the first time (IEC 61298-2). Valid with operating voltage U_B ≥ 24 V DC.
8) Outside the specified beam angle, the energy level of the radar signal is 50% (-3 dB) less.
9) EIRP: Equivalent Isotropic Radiated Power

Ambient conditions	
Ambient temperature	-40 … +80 °C (-40 … +176 °F)
Storage and transport temperature	-40 … +80 °C (-40 … +176 °F)

Mechanical environmental conditions	
Sinusoidal vibrations	Class 4M8 acc. to IEC 60271-3-4
Impacts	50 g, 2.3 ms according to EN 60068-2-27 (mechanical shock)
Impact resistance	IK07 acc. to IEC 62262

Process conditions	
For the process conditions, please also note the specifications on the type label. The lowest value (amount) always applies.	
Process temperature	-40 … +80 °C (-40 … +176 °F)
Process pressure	-1 … 3 bar (-100 … 200 kPa/-14.5 … 43.51 psig)

Electromechanical data	
Cable entry	Fixed connection
Connection cable	
– Configuration	Wires, screen braiding, sheathing
– Wire cross-section	0.5 mm^2 (AWG 20)
– Min. bending radius (at 25 °C/77 °F)	25 mm (0.984 in)
– Diameter	approx. 6 mm (0.236 in)
– Wire isolating and cable cover	PUR
– Colour	Black
– Colour - Ex i version	Blue
– Flame retardant according to	IEC 60332-1-2, UL 1581 (Flametest VW-1)

Bluetooth interface	
Bluetooth standard	Bluetooth 5.0 (downward compatible to Bluetooth 4.0 LE)
Max. participants	1
Effective range[10)]	max. 25 m (82 ft)

Voltage supply	
Operating voltage U_B	12 … 35 V DC
Reverse voltage protection	Integrated
Permissible residual ripple	
– for 12 V < U_B < 18 V	≤ 0.7 V_{eff} (16 … 400 Hz)
– for 18 V < U_B < 35 V	≤ 1 V_{eff} (16 … 400 Hz)
Load resistor	
– Calculation	(U_B - U_{min})/0.022 A

[10)] Depending on the local conditions

– Example - with U_B= 24 V DC	(24 V - 12 V)/0.022 A = 545 Ω

Electrical protective measures	
Potential separation	Electronics potential free up to 500 V AC
Protection rating	IP66/IP68 (3 bar) acc. to IEC 60529, Type 4P acc. to UL 50
Altitude above sea level	5000 m (16404 ft)
Protection class	III
Pollution degree	4

14.2 Dimensions

VEGAPULS C 22

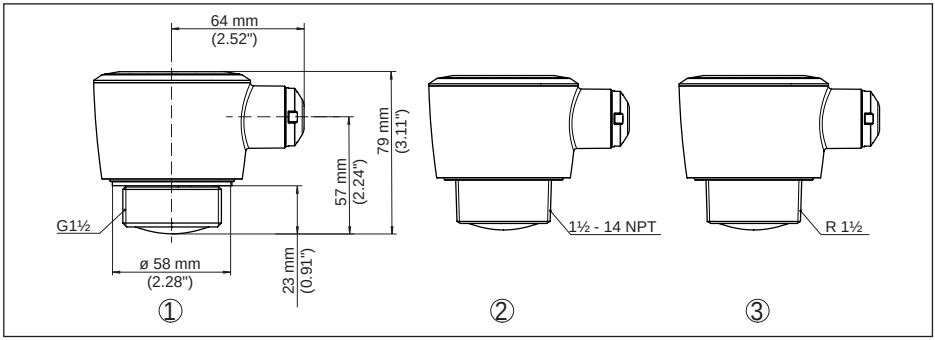

Fig. 30: Dimensions VEGAPULS C 22

1 Thread G1½
2 Thread 1½NPT
3 Thread R1½

14.3 Industrial property rights

VEGA product lines are global protected by industrial property rights. Further information see www.vega.com.

VEGA Produktfamilien sind weltweit geschützt durch gewerbliche Schutzrechte.

Nähere Informationen unter www.vega.com.

Les lignes de produits VEGA sont globalement protégées par des droits de propriété intellectuelle. Pour plus d'informations, on pourra se référer au site www.vega.com.

VEGA lineas de productos están protegidas por los derechos en el campo de la propiedad industrial. Para mayor información revise la pagina web www.vega.com.

Линии продукции фирмы ВЕГА защищаются по всему миру правами на интеллектуальную собственность. Дальнейшую информацию смотрите на сайте www.vega.com.

VEGA系列产品在全球享有知识产权保护。

进一步信息请参见网站<www.vega.com。

14.4 Hash function acc. to mbed TLS

mbed TLS: Copyright (C) 2006-2015, ARM Limited, All Rights Reserved SPDX-License-Identifier: Apache-2.0

Licensed under the Apache License, Version 2.0 (the "License"); you may not use this file except in compliance with the License. You may obtain a copy of the License at http://www.apache.org/licenses/LICENSE-2.0.

Unless required by applicable law or agreed to in writing, software distributed under the License is distributed on an "AS IS" BASIS, WITHOUT WARRANTIES OR CONDITIONS OF ANY KIND, either express or implied. See the License for the specific language governing permissions and limitations under the License.

14.5 Trademark

All the brands as well as trade and company names used are property of their lawful proprietor/originator.

Printing date:

All statements concerning scope of delivery, application, practical use and operating conditions of the sensors and processing systems correspond to the information available at the time of printing.
Subject to change without prior notice

© VEGA Grieshaber KG, Schiltach/Germany 2019

58344-EN-191014

VEGA Grieshaber KG
Am Hohenstein 113
77761 Schiltach
Germany

Phone +49 7836 50-0
Fax +49 7836 50-201
E-mail: info.de@vega.com
www.vega.com