Operating Instructions

Compact control and display instrument for connection of one radio-based sensor

VEGAMET Air 141

LoRaWAN

Document ID: 1104030

Contents

1 About this document ... 4
1.1 Function ... 4
1.2 Target group ... 4
1.3 Symbols used ... 4

2 For your safety ... 5
2.1 Authorised personnel ... 5
2.2 Intended use ... 5
2.3 Warning about incorrect use ... 5
2.4 General safety instructions ... 5
2.5 Installation and operation in the USA and Canada ... 6
2.6 Safety instructions for Ex areas ... 6

3 Product description ... 7
3.1 Configuration ... 7
3.2 Principle of operation ... 8
3.3 Adjustment ... 8
3.4 Packaging, transport and storage ... 9
3.5 Accessories ... 10

4 Mounting ... 11
4.1 General instructions ... 11

5 Connecting to power supply ... 12
5.1 Preparing the connection ... 12
5.2 Connecting ... 12
5.3 Wiring plan ... 13
5.4 Switch-on phase ... 13

6 Access protection ... 14
6.1 Bluetooth radio interface ... 14
6.2 Protection of the parameterization ... 14
6.3 Storing the codes in myVEGA ... 15

7 Set up with the integrated display and adjustment unit ... 16
7.1 Adjustment system ... 16
7.2 Measured value and menu item display ... 17
7.3 Menu overview ... 18
7.4 Setup steps ... 19

8 Setup with smartphone/tablet (Bluetooth) ... 25
8.1 Preparations ... 25
8.2 Connecting ... 25
8.3 Parameter adjustment ... 26

9 Setup with PC/notebook (Bluetooth) ... 27
9.1 Preparations ... 27
9.2 Connecting ... 27
9.3 Parameter adjustment ... 28

10 Applications and functions ... 29
10.1 Application example ... 29

11 Diagnostics and servicing ... 30
11.1 Maintenance ... 30

1104030-EN-260703

11.2 Rectify faults ... 30
11.3 Diagnosis, fault messages ... 30
11.4 Software update ... 32
11.5 How to proceed if a repair is necessary ... 33

12 Dismount ... 34
12.1 Dismounting steps ... 34
12.2 Disposal ... 34

13 Certificates and approvals ... 35
13.1 Radio licenses ... 35
13.2 Conformity ... 35
13.3 Environment management system ... 35

14 Supplement ... 36
14.1 Technical data ... 36
14.2 Overview applications/functionality ... 39
14.3 Dimensions ... 42
14.4 Industrial property rights ... 43
14.5 Licensing information for open source software ... 43
14.6 Trademark ... 43

1104030-EN-260703

Editing status: 2026-05-18

1 About this document

1.1 Function

This instruction provides all the information you need for mounting, connection and setup as well as important instructions for maintenance, fault rectification, safety and the exchange of parts. Please read this information before putting the instrument into operation and keep this manual accessible in the immediate vicinity of the device.

1.2 Target group

This instruction manual is directed to trained personnel. The contents of this manual must be made available to the qualified personnel and implemented.

1.3 Symbols used

Document ID
This symbol on the front page of this instruction refers to the Document ID. By entering the Document ID on **www.vega.com** you will reach the document download.

Information, note, tip: This symbol indicates helpful additional information and tips for successful work.

All sections of text marked with this warning symbol must be read before setup.

Note: This symbol indicates notes to prevent failures, malfunctions, damage to devices or plants.

Caution: Non-observance of the information marked with this symbol may result in personal injury.

Warning: Non-observance of the information marked with this symbol may result in serious or fatal personal injury.

Danger: Non-observance of the information marked with this symbol results in serious or fatal personal injury.

Ex applications
This symbol indicates special instructions for Ex applications.

- **List**
  The dot set in front indicates a list with no implied sequence.

1 **Sequence of actions**
Numbers set in front indicate successive steps in a procedure.

Disposal
This symbol indicates special instructions for disposal.

2 For your safety

2.1 Authorised personnel

All operations described in this documentation must be carried out only by trained and authorized personnel.

During work on and with the device, the required personal protective equipment must always be worn.

2.2 Intended use

VEGAMET Air 141 is a universal controller for connection of radio-based sensors.

You can find detailed information about the area of application in chapter "*Product description*".

Operational reliability is ensured only if the instrument is properly used according to the specifications in the operating instructions manual as well as possible supplementary instructions.

2.3 Warning about incorrect use

Inappropriate or incorrect use of this product can give rise to application-specific hazards, e.g. vessel overfill through incorrect mounting or adjustment. Damage to property and persons or environmental contamination can result. Also, the protective characteristics of the instrument can be impaired.

2.4 General safety instructions

This is a state-of-the-art instrument complying with all prevailing regulations and directives. The instrument must only be operated in a technically flawless and reliable condition. The operating company is responsible for the trouble-free operation of the instrument. When measuring aggressive or corrosive media that can cause a dangerous situation if the instrument malfunctions, the operating company has to implement suitable measures to make sure the instrument is functioning properly.

During the entire duration of use, the operating company is obliged to determine the compliance of the necessary occupational safety measures with the current valid rules and regulations and also take note of new regulations.

The safety instructions in this operating instructions manual, the national installation standards as well as the valid safety regulations and accident prevention rules must be observed.

For safety and warranty reasons, any invasive work on the device beyond that described in the operating instructions manual may be carried out only by personnel authorised by us. Arbitrary conversions or modifications are explicitly forbidden. For safety reasons, only the accessory specified by us must be used.

To avoid any danger, the safety approval markings and safety tips on the device must also be observed.

2.5 Installation and operation in the USA and Canada

This information is only valid for USA and Canada. Hence the following text is only available in the English language.

Installations in the US shall comply with the relevant requirements of the National Electrical Code (NEC - NFPA 70) (USA).

Installations in Canada shall comply with the relevant requirements of the Canadian Electrical Code (CEC Part I) (Canada).

2.6 Safety instructions for Ex areas

For applications in hazardous areas (Ex), only devices with corresponding Ex approval may be used. Observe the Ex-specific safety instructions. These are an integral part of the device documentation and are enclosed with every device with Ex approval.

3 Product description

3.1 Configuration

Scope of delivery

The scope of delivery encompasses:

- Controller VEGAMET Air 141
- External omnidirectional antenna with base plate
- Information sheet "*Documents and software*" with:
  - Instrument serial number
  - QR code with link for direct scanning
- Information sheet "*PINs and Codes*" with:
  - Bluetooth access code
- Information sheet "*Access protection*" with:
  - Bluetooth access code
  - Emergency Bluetooth unlock code
  - Emergency device code

The further scope of delivery encompasses:

- Documentation
  - Ex-specific "*Safety instructions*" (with Ex versions)
  - Radio licenses
  - If necessary, further certificates

Information:
Optional instrument features are also described in this instructions.
The respective scope of delivery results from the order specification.

Constituent parts

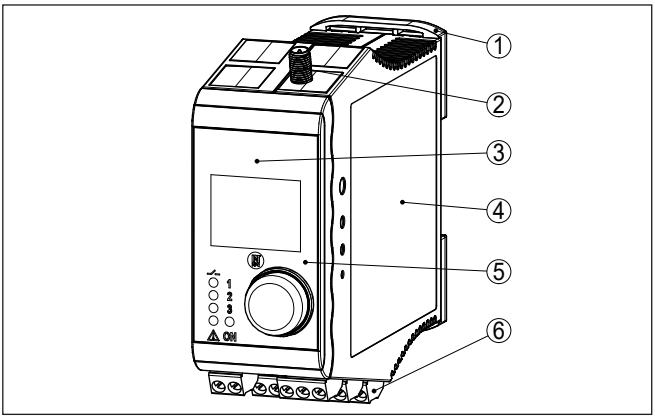

Fig. 1: VEGAMET Air 141

1 *Carrier rail clip*
2 *Antenna connection*
3 *NFC reader*
4 *Housing with type label and connection diagrams*
5 *Display and adjustment unit*
6 *Connection terminals*

Type label

The type label contains the most important data for identification and use of the instrument:

- Instrument type
- Information about approvals
- Configuration information
- Technical data
- Serial number of the instrument
- QR code for device identification
- Numerical code for Bluetooth access (optional)
- Manufacturer information

Documents and software

To find order data, documents or software related to your device, you have the following options:

- Move to "**www.vega.com**" and enter in the search field the serial number of your instrument.
- Scan the QR code on the type label.
- Open the VEGA Tools app and enter the serial number under "***Documentation***".

Information:
If the serial number or the QR code on the type label cannot be read, they can be found additionally on the display cover inside the device.

3.2 Principle of operation

Application area

The controller VEGAMET Air 141 receives and processes the measured values from one wirelessly connected sensor and displays them on the screen. The compact design is ideal for mounting on carrier rails in switching cabinets. A graphic display and a turn/push button for quick on-site control of the measuring point are also integrated.

It enables easy implementation of pump controls, flow measurements on open channels and weirs as well as totalizers. The VEGAMET Air 141 can be used to monitor limit values and switch relays.

The simple connection of radio-based sensors over long distances enables applications where laying a cable would be too costly or impossible.

Functional principle

The VEGAMET Air 141 controller evaluates the measurement signals of wirelessly connected sensors. The requested parameter is shown on the display and also output to the integrated current output for further processing. The measurement signal can thus be transferred to a remote display or a superordinate control system. Operating relays for control of pumps or other devices are also integrated.

3.3 Adjustment

Local adjustment

On-site operation of the device is carried out via the integrated display and adjustment unit. It consists of a graphic display and a central turn/push button for menu adjustment.

Wireless adjustment

The optionally integrated Bluetooth module enables in addition a wireless adjustment of VEGAMET Air 141 via standard adjustment tool:

- Smartphone/tablet (iOS or Android operating system)
- PC/notebook with Bluetooth LE or Bluetooth USB adapter (Windows operating system)

Information:
Certain setting options are not possible or only possible to a limited extent with the integrated display and adjustment unit, for example the settings for flow measurement or pump control. For these applications, the use of PACTware/DTM or the VEGA Tools app is recommended. An overview of the available applications and functions as well as their adjustment options can be found in the appendix.

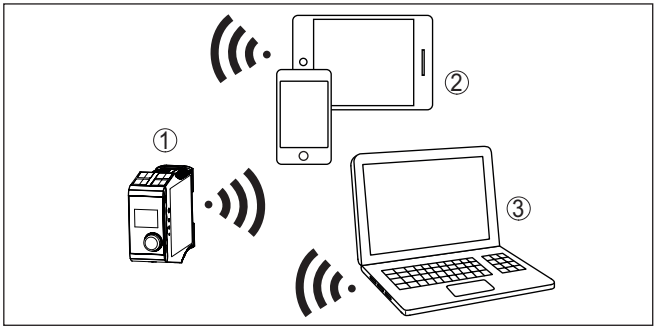

Fig. 2: Wireless connection to standard adjustment tools with integrated Bluetooth LE or alternatively Bluetooth USB adapter.

1 VEGAMET Air 141
2 Smartphone/Tablet
3 PC/Notebook

3.4 Packaging, transport and storage

Packaging

Your instrument was protected by packaging during transport. Its capacity to handle normal loads during transport is assured by a test based on ISO 4180.

The packaging consists of environment-friendly, recyclable cardboard. For special versions, PE foam or PE foil is also used. Dispose of the packaging material via specialised recycling companies.

Transport

Transport must be carried out in due consideration of the notes on the transport packaging. Nonobservance of these instructions can cause damage to the device.

Transport inspection

The delivery must be checked for completeness and possible transit damage immediately at receipt. Ascertained transit damage or concealed defects must be appropriately dealt with.

Storage

Up to the time of installation, the packages must be left closed and stored according to the orientation and storage markings on the outside.

Unless otherwise indicated, the packages must be stored only under the following conditions:

- Not in the open
- Dry and dust free
- Not exposed to corrosive media
- Protected against solar radiation
- Avoiding mechanical shock and vibration

Storage and transport temperature

- Storage and transport temperature see chapter "*Technical data - Ambient conditions*"
- Relative moisture 20 … 85 %

3.5 Accessories

Remote antenna

A remote antenna is essential for operation. It is available for wall or magnetic base mounting and in various protection ratings. The cable length is3 m.

4 Mounting

4.1 General instructions

Mounting options

VEGAMET Air 141 is designed for carrier rail mounting (top hat rail 35 x 7.5 according to DIN EN 50022/60715). Due to its protection rating of IP20, the instrument is suitable for mounting in switching cabinets. It must be mounted vertically.

A VEGAMET Air 141 in Ex version is an auxiliary, intrinsically safe instrument and may not be installed in explosion-endangered areas.

Mounting location/Antenna

Install the device so that the antenna can freely radiate. If LoRaWAN reception is poor at the mounting location – for example, if the device is installed in a metal switching cabinet – a remote antenna can be used (optional accessory). The cable length is 3 m.

Note:
If third-party antennas are used, the device's radio licence of the VEGAMET Air 141 expires.

Ambient conditions

The instrument is suitable for standard and extended ambient conditions acc. to DIN/EN/BS EN/IEC/ANSI/ISA/UL/CSA 61010-1.

Make sure that the environmental and ambient conditions specified in chapter "*Technical data*" are maintained.

5 Connecting to power supply

5.1 Preparing the connection

Safety instructions

Always keep in mind the following safety instructions:

- The electrical connection must only be carried out by trained, qualified personnel authorised by the plant operator.
- If overvoltage surges are expected, overvoltage arresters should be installed.

Warning:
Only connect or disconnect in de-energized state.

Note:
Install a disconnecting device for the instrument which is easy to access. The separation facility must be designed and rated for the power consumption of the instrument (IEC/EN 61010).

Voltage supply

The data for power supply are specified in chapter "*Technical data*".

Connection cable

The voltage supply is connected with standard cable according to the national installation standards.

Note:
If the temperatures are too high, the cable insulation can be damaged. Hence keep apart from the ambient temperature also the self-heating of the instrument for the temperature resistance of the cable in the connection compartment in mind.[1)]

When used in the USA/Canada, only cables with copper conductors may be used.

5.2 Connecting

Connection technology

The power supply and the outputs are connected via removable screw terminals. You can find information on the max. wire cross-section in the technical data.

Connecting

Connect the device as described in the following wiring plan.

[1)] With an ambient temperature ≥ 50 °C (122 °F) the connection cable should be suitable for an ambient temperature which is at least 20 °C (36 °F) higher.

5.3 Wiring plan

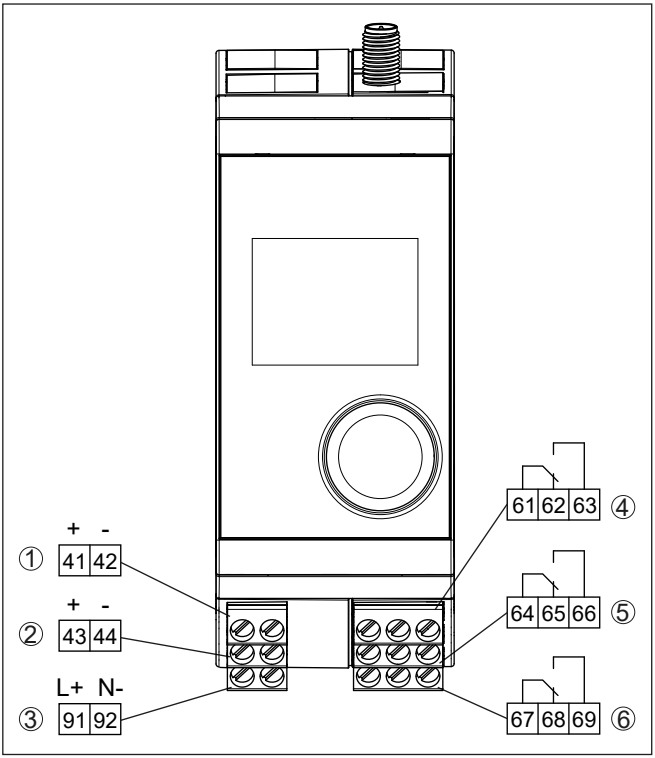

Fig. 3: Wiring plan VEGAMET Air

1 *4 … 20 mA current output 1*
2 *4 … 20 mA current output 2*
3 *Voltage supply of the controller*
4 *Relay output 1*
5 *Relay output 2*
6 *Relay output 3*

Note:
Mixed operation with hazardous voltages (> 30 V AC, > 60 V DC) and non-hazardous voltages (< 30 V AC, < 60 V DC) is not permitted for the relay outputs.

5.4 Switch-on phase

After switching on, the device first carries out a short self-check.

- Internal check of the electronics
- Output signals are set to malfunction, backlight of the display lights red

The current measured values are then displayed and transmitted to the outputs. The backlight of the display changes to white.

6 Access protection

6.1 Bluetooth radio interface

Devices with a Bluetooth radio interface are protected against unwanted access from outside. This means that only authorized persons can receive measured and status values and change device settings via this interface.

Information:
If no Bluetooth connection to the device should be possible, Bluetooth communication can be deactivated. Access via app or DTM is thus no longer possible. The Bluetooth function can be deactivated/activated in the menu item "*Extended functions*" under "*Access protection - Bluetooth communication*".

Bluetooth access code

A Bluetooth access code is required to establish Bluetooth communication via the adjustment tool (smartphone/tablet/notebook). This code must be entered once when Bluetooth communication is established for the first time in the adjustment tool. It is then stored in the adjustment tool and does not have to be entered again.

The Bluetooth access code is individual for each device. It is printed on the device housing and is also supplied with the device in the information sheet "*PINs and Codes*". The Bluetooth access code can also be read out via the display and adjustment unit.

The Bluetooth access code can be changed by the user after the first connection is established. If the Bluetooth access code is entered incorrectly, the new entry is only possible after a waiting period has elapsed. The waiting time increases with each further incorrect entry.

Emergency Bluetooth unlock code

The emergency Bluetooth access code enables Bluetooth communication to be established in the event that the Bluetooth access code is no longer known. It can't be changed. The emergency Bluetooth access code can be found in information sheet "*Access protection*". If this document is lost, the emergency Bluetooth access code can be retrieved from your personal contact person after legitimation. The storage and transmission of Bluetooth access codes is always encrypted (SHA 256 algorithm).

6.2 Protection of the parameterization

The settings (parameters) of the device can be protected against unwanted changes. The parameter protection is deactivated on delivery, all settings can be made.

Device code

To protect the parameterization, the device can be locked by the user with the aid of a freely selectable device code. The settings (parameters) can then only be read out, but not changed. The device code is also stored in the adjustment tool. However, unlike the Bluetooth access code, it must be re-entered for each unlock. When using the adjustment app or DTM, the stored device code is then suggested to the user for unlocking.

Emergency device code

The emergency device code allows unlocking the device in case the device code is no longer known. It can't be changed. The emergency device code can also be found on the supplied information sheet "*Access protection*". If this document is lost, the emergency device code can be retrieved from your personal contact person after legitimation. The storage and transmission of the device codes is always encrypted (SHA 256 algorithm).

6.3 Storing the codes in myVEGA

If the user has a "*myVEGA*" account, then the Bluetooth access code as well as the device code are additionally stored in his account under "*PINs and Codes*". This greatly simplifies the use of additional adjustment tools, as all Bluetooth access and device codes are automatically synchronized when connected to the "*myVEGA*" account

7 Set up with the integrated display and adjustment unit

7.1 Adjustment system

Function

The integrated display and adjustment unit is used for measured value display, adjustment and diagnosis of the VEGAMET Air 141. Display and adjustment are carried out via the central turn/push buttons and a graphic-capable display with background lighting.

Certain setting options are not possible or only possible to a limited extent with the integrated display and adjustment unit, for example the settings for flow measurement or pump control. For these applications, the use of PACTware/DTM or the VEGA Tools app is recommended. A tabular overview of the corresponding applications and functions can be found in the appendix.

Display and adjustment elements

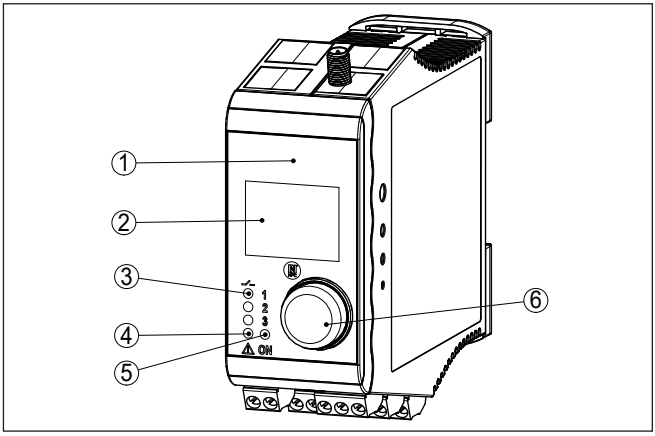

Fig. 4: Display and adjustment elements

1 NFC reader
2 LC display
3 Status indication relay
4 Status indication fault signal
5 Status indication operation
6 Turn/push button for menu adjustment

Functions turn/push button

Turn/Push button	Function
Short pressure	Entry to the menu level Jump to selected menu item Edit parameter Select editing position Save value
Turn	Change between the measured value indications Navigation in the menu items Change parameter values

Turn/Push button	Function
Long pressure	Jump to next higher menu Key pressing longer than 2 s, direct return to the measured value indication Cancel input without saving

Time functions

Approx. 60 minutes after the last pressing of a key, an automatic reset to measured value indication is triggered. Any values not confirmed will not be saved.

7.2 Measured value and menu item display

Measured value indication

The measured value display shows the digital display value, the measuring loop name (measuring loop TAG) and the unit. In addition, an analogue bar graph can be displayed. Up to three measured value indications with a maximum three different measured values can be configured. If pump control is activated, an additional status bar with display of the assigned pumps is available.

Measured values are displayed according to the following presentation:

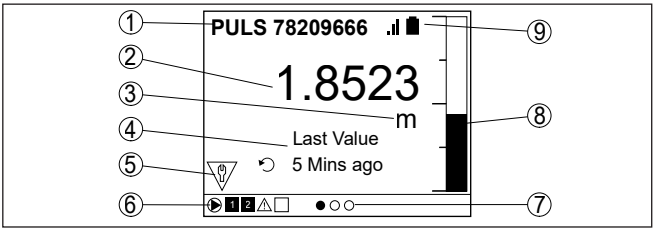

Fig. 5: Example measured value indication (measured value with bargraph)

1 *Measurement loop name*
2 *Measured value*
3 *Unit*
4 *Last transmitted measured value*
5 *Status message acc. to NAMUR NE 107*
6 *Status bar for pump control*
7 *Active measured value indication*
8 *Bargraph measured value*
9 *Signal strength indicator (LoRa) and battery level (sensor)*

Status display/backlight

The display is equipped with a backlight for better visibility. It serves simultaneously as a status display which is also visible from a great distance. The colour of the background lighting changes in the delivery status according to NAMUR NE 107.

- **White:** Error-free operation
- **Red:** Failure, error, malfunction
- **Orange:** Function check
- **Blue:** Maintenance required
- **Yellow:** Outside the specification

Alternatively, the status display can also show the switching status of the relays or measured value ranges individually with freely definable

colours. Up to five measured value ranges, e.g., depending on the filling level, can be displayed in different colours. The background lighting can also be configured to flash in any colour as an additional signalling option.

Information:
This individual colour signalling is configured with PACTware/DTM or the VEGA Tools App.

Menu item display

The menu items are displayed according to the following presentation:

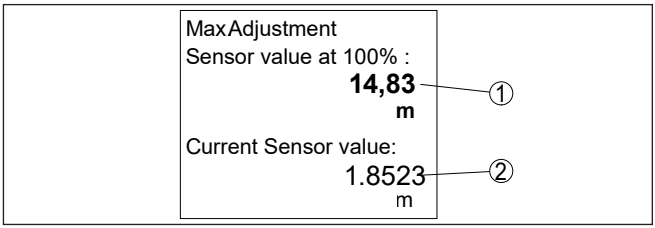

Fig. 6: Menu item display (example)

1 Sensor measured value at 100 %
2 Current sensor measured value

7.3 Menu overview

Measurement loop

Description	Basic settings
Linearisation	Linearization settings
Adjustment	Adjustment settings
Scaling	Scaling settings
Outputs	Relay/current output settings

Indication

Description	Basic settings
Number of measured value indications	Number of displayed measured value indications
Measured value indication	Settings for the measured value displays, automatic change of the measured value display
Options	Display options e.g. brightness, contrast, illumination
Menu language	Language settings

Extended functions

Description	Basic settings
Fail safe relay	Activate/deactivate fail safe relay
Access protection	Access protection for Bluetooth and protection of the parameter adjustment
Reset	Reset of the device

Diagnostics

Description	Basic settings
Status	Status indication, e.g. device, sensor, relay

Description	Basic settings
Simulation	Simulation function
Device-TAG	Display device name
Device information	Device information, e.g. serial number

7.4 Setup steps

Pair the sensor

The first step is to pair the sensor with VEGAMET Air 141. With VEGA sensors his is done very easily and automatically via the built-in NFC reader.

Parameter adjustment

Through parameter adjustment, the instrument is adapted to the individual application conditions. A measurement loop calibration is the most important step and should always be carried out. A scaling of the measured value to the desired physical variable and unit, possibly including a linearization curve, is often useful. The adaptation of the relay switching points is a further standard adjustment option.

Information:
When using PACTware and the respective DTM or the VEGA Tools app, additional settings can be carried out which are not possible or only partly possible with the integrated display and adjustment unit. Communication takes place via the built-in Bluetooth interface.

Applications

The device is configured ex works for universal applications. The following applications can be changed over and configured via the VEGA Tools app or the DTM:

- Universal
- Level - storage tank
- Wells
- Pumping station
- Sewage screw lifting station
- Flow measurement flume/weir

Information:
An overview of the available applications and functions can be found in the appendix

Add/exchange a sensor

This function allows the VEGA LoRa sensors to be paired with the VEGAMET Air 141 quickly and easily. When the function is launched, the built-in NFC reader is activated for 30 seconds. If the LoRa sensor is held against the front side of the VEGAMET Air 141 during this time, the two devices will pair automatically. If a sensor is already connected, it can be replaced by the new one.

Menu

The menu is divided into four areas with the following functions:

- **Measuring point:** Includes settings for adjustment, linearization, scaling, relay outputs, …
- **Display:** Contains settings for display of measured values

- **Extended functions:** Includes settings for fail safe relay, access protection, reset, …
- **Diagnosis** Includes information on device type/status, …

7.4.1 Measurement loop

Linearisation

A linearisation is necessary for all vessels in which the vessel volume does not increase linearly with the level, for example a horizontal cylindrical or spherical tank. Corresponding linearisation curves are preprogrammed for these vessels. They represent the correlation between the level percentage and vessel volume. By activating the appropriate curve, the volume percentage of the vessel is displayed correctly. If the volume should not be displayed in percent but e.g. in l or kg, a scaling can be also set.

When setting up a flow measurement, a linearization curve suitable for the structural conditions must be selected. Corresponding curves such as venturi, triangular overflow, … are available here. In addition, individual, user-programmable linearisation curves can be stored via DTM.

Adjustment

Through the adjustment the input value of the connected sensor is converted into a percentage value. This conversion step allows any input value range to be depicted in a relative range (0 % up to 100 %).

The percentage values can be used for presentation on the display, for direct use in an output or for further conversion via linearization or scaling.

When using the display and adjustment unit, the adjustment unit is always the physical measured value of the sensor. When using PACTware/DTM or the VEGA Tools app, further units can be selected. If these have been activated, they are also shown in the display.

Min. adjustment (empty vessel)
If you want to use the currently measured level as a 0 %value, select the menu item "*Accept*" (live adjustment or adjustment with medium). If the adjustment is to be carried out independently of the measured level, select the option "*Edit*". Now enter the appropriate measured value for the empty vessel (0 %) (dry adjustment or adjustment without medium).

Max. adjustment (full vessel)
If you want to use the currently measured level as a 100 %value, select the menu item "*Accept*" (live adjustment or adjustment with medium). If the adjustment is to be carried out independently of the measured level, select the option "*Edit*". Now enter the appropriate measured value for the full vessel (100 %) (dry adjustment or adjustment without medium).

Scaling

Scaling means converting the measured value into a certain parameter and unit. The linearized percentage value is the source signal which is used as basis for the scaling. The indication can then show the volume in litres e.g., instead of the percentage value. Indication values from max. -9999999 to +9999999 are possible.

Outputs - Relay outputs

A total of three relays is available. Relays 1 … 2 are freely available and not yet assigned to a function. To be able to use these relays, they must first be activated. Relay 3 is configured in the factory as a fail safe relay, but can also be configured as additional operating relay.

After activating a relay output, the desired mode of operation must first be selected("*Overfill protection/Dry run protection*").

- **Overfill protection**: Relay is switched off when the max. level is exceeded (safe currentless state), relay is switched on again when the level falls below the min. level (switch-on point < switch-off point)
- **Dry run protection**: Relay is switched off when the level falls below the min. level (safe currentless state), relay is switched on again when the max. level is exceeded (switch-on point > switch-off point)

Additional modes such as "*Pump control*", "*Switching window*", "*Flow*" and "*Tendency*" can be only set via PACTware/DTM or the VEGA Tools app.

In the menu item "*Reference value*" it is defined which measured value serves as input signal for the relay (percentage/lin.-percent/scaled).

Enter the values for switching the relay on and off under Enter the values for switching the relay on and off under "*Switching point*".

The menu item "*Behaviour in case of malfunction*" defines how the relay behaves if the assigned measuring point is disturbed. Here it can be selected whether the switching state of the relay remains unchanged or whether the relay is switched off in the event of a malfunction.

Outputs - Current output

The current output is used to transfer the measured value to a superordinate system, e.g. a PLC, a process control system or a measured value indication. This is an active output, i.e. the current is provided actively. The processing must hence have a passive current input. If the current output is not used, it can be deactivated in the first menu item.

The characteristics of the current output can be set to 0 … 20 mA, 4 … 20 mA or inverted. The reaction in case of failure can also be adapted to the requirements. The reference value you refer to can also be selected.

7.4.2 Indication

Number of measured value indications

The indication can display up to three different, user-configurable measured values simultaneously. In addition, up to three different measured value indications can be configured, which can be selected using the arrow keys. Alternatively, the display of the measured value indications can also be changed automatically at intervals of approx. 3 seconds.

In the menu item "*Display - Number of measured value indications*" you can configure how many measured value indications are to be displayed.

Measured value indication 1 … 3

The content of the measured value indication is configured in the menu item "*Display - Measured value indication*". Up to 3 different measured values can be displayed in one indication. For each measured value it is also possible to configure which display value (percent, scaled, sensor value, …) is displayed. In addition, the display format (number of decimal positions) can also be configured. In addition, a bar graph can be displayed parallel to the measured value (only available when displaying a single measured value).

Options - Brightness

In the menu item "*Display - Options - Brightness*" the brightness of the backlight can be adjusted.

Options - Contrast

In the menu item "*Display - Options - Contrast*" the contrast of the display can be adjusted.

Options - Lighting

In the menu item "*Display - Options - Lighting*" the lighting can be set permanently to "*Permanently ON*" or "*Automatically OFF*" (after two minutes). With the setting "*Automatically OFF*" the lighting is switched on for two minutes as soon as any button is pressed.

Menu language

In the menu item "*Display - Menu language*", the requested language can be adjusted. The following languages are available:

- German
- English
- French
- Spanish
- Portuguese
- Italian
- Dutch
- Russian
- Chinese
- Japanese
- Turkish

7.4.3 Extended functions

Fail safe relay

Relay 3 can optionally be configured as additional operating relay or as a fail safe relay. In this menu item, the fail safe relay can be activated or deactivated. If relay 3 is to be configured as an operating relay, it must still be activated as an operating relay after deactivation as a fail safe relay. This is done in menu item"*Measuring point - Relay 3*"

Access protection - Bluetooth communication

Bluetooth communication can be activated/deactivated in this menu item. If Bluetooth communication is deactivated, a connection via app or DTM is no longer possible.

You can find further details in chapter "*Access protection*".

Access protection - Bluetooth access code

Bluetooth communication is encrypted to prevent unauthorized access. The Bluetooth access code required for communication is displayed here and can be changed as required.

Note:
The individual, default Bluetooth access code of the device can be found on the device housing and on the supplied information sheet "*PINs and Codes*". If this has been changed by the user and is no longer known, access is only possible via the emergency Bluetooth access code. You can find the emergency Bluetooth access code on the supplied information sheet "*Access protection*"

You can find further details in chapter "*Access protection*".

Access protection - Protection of the parameter adjustment

The device parameters can be protected against unwanted or unintended changes by entering a device code.

With activated protection of the parameter adjustment, the individual menu items can be selected and displayed, however the parameters can no longer be modified.

Releasing the device adjustment is also possible in any menu item by entering the device code.

Note:
The default device code is "*000000*". If this has been changed by the user and is no longer known, access is only possible via the emergency device code. You will find the emergency device code on the supplied information sheet "*Access protection*"

Caution:
With protected parameter adjustment, adjustment via the VEGA Tools app as well as PACTware/DTM and other systems is also blocked.

You can find further details in chapter "*Access protection*".

Reset

With a reset to basic setting, all settings except the display language and the Bluetooth access code are reset to factory settings. If desired, the device can also be restarted.

7.4.4 Diagnostics

Status

When the instrument displays a fault signal, further information about the malfunction can be called up via the menu item "*Diagnosis - Status*". Furthermore, the sensor status with temperature and location can be displayed. The status of the relay, its switched-on period and the number of switch-on events can also be displayed. The counters can also be reset.

Simulation

The simulation of a measured value is used to check the outputs and connected components. It can be applied to the sensor value, the percentage value, the lin. percentage value as well as the scaled value.

Note:
Please note that downstream plant components (valves, pumps, motors, controls) are influenced by the simulation, which can lead to unintentional plant operating states. The simulated value is output until you deactivate the simulation mode again. The simulation is automatically terminated after approx. 60 minutes.

Device-TAG

You can assign an unambiguous name to VEGAMET Air 141 to the Device-TAG via DTM/VEGA Tools app. This function is recommended when several instruments are implemented and a good documentation of larger systems is required.

Device information

The menu item "*Device information*" provides the device name and serial number as well as the hardware and software version.

8 Setup with smartphone/tablet (Bluetooth)

8.1 Preparations

System requirements

Make sure that your smartphone/tablet meets the following system requirements:

- Operating system: iOS 13 or newer
- Operating system: Android 8.0 or newer
- Bluetooth 4.0 LE or newer

Download the VEGA Tools app from the "*Apple App Store*", "*Google Play Store*" or "*Baidu Store*" to your smartphone or tablet.

8.2 Connecting

Connecting

Start the VEGA Tools app and select the function "*Setup*". The smartphone/tablet searches automatically for Bluetooth-capable instruments in the area.

The devices found are listed and the search is automatically continued.

Select the requested instrument in the device list.

As soon as the Bluetooth connection to a device is established, the LED display of the device in question flashes blue 4 times.

The message "*Connecting …*" is displayed.

Authenticate

When establishing the connection for the first time, the operating tool and the controller must authenticate each other. After the first correct authentication, each subsequent connection is made without a new authentication query.

Enter Bluetooth access code

For authentication, enter the 6-digit Bluetooth access code in the next menu window. You can find the code on the outside of the device housing and on the information sheet "*Pins and Codes*" in the device packaging.

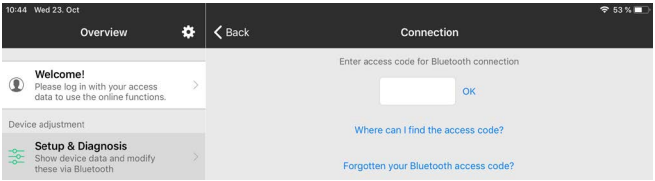

Note:
If an incorrect code is entered, the code can only be entered again after a delay time. This time gets longer after each incorrect entry.

The message "*Waiting for authentication*" is displayed on the smartphone/tablet.

Connected

After connection, the adjustment menu is displayed on the respective adjustment tool.

If the Bluetooth connection is interrupted, e.g. due to a too large distance between the two devices, this is displayed on the adjustment tool. The message disappears when the connection is restored.

Change device code

Parameter adjustment of the device is only possible if the parameter protection is deactivated. When delivered, parameter protection is deactivated by default and can be activated at any time.

It is recommended to enter a personal 6-digit device code. To do this, go to menu "*Extended functions*", "*Access protection*", menu item "*Protection of the parameter adjustment*".

8.3 Parameter adjustment

Enter parameters

The adjustment menu is divided into two halves:

On the left you will find the navigation area with the menus "*Setup*", "*Extended functions*" as well as "*Diagnosis*".

The selected menu item, recognisable by the colour change, is displayed in the right half.

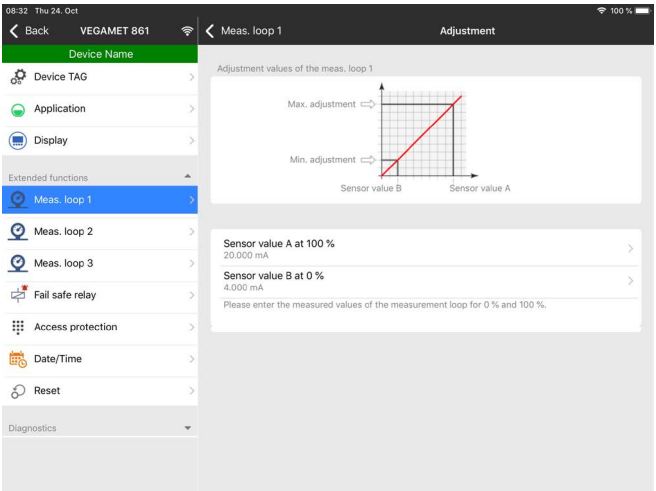

Fig. 7: Example of an app view - Setup adjustment

Enter the requested parameters and confirm via the keyboard or the editing field. The settings are then active in the device.

Close the app to terminate connection.

9 Setup with PC/notebook (Bluetooth)

9.1 Preparations

System requirements

Make sure that your PC/notebook meets the following system requirements:

- Operating system Windows 10 or newer
- DTM Collection 10/2020 or newer
- Bluetooth 4.0 LE or newer

Activate Bluetooth connection

Activate the Bluetooth connection via the project assistant.

Note:
Older systems do not always have an integrated Bluetooth LE. In these cases, a Bluetooth USB adapter is required. Activate the Bluetooth USB adapter using the Project Wizard.

After activating the integrated Bluetooth or the Bluetooth USB adapter, devices with Bluetooth are found and created in the project tree.

9.2 Connecting

Connecting

Select the requested device for the online parameter adjustment in the project tree.

Authenticate

When establishing the connection for the first time, the operating tool and the controller must authenticate each other. After the first correct authentication, each subsequent connection is made without a new authentication query.

Enter Bluetooth access code

For authentication, enter in the next menu window the 6-digit Bluetooth access code:

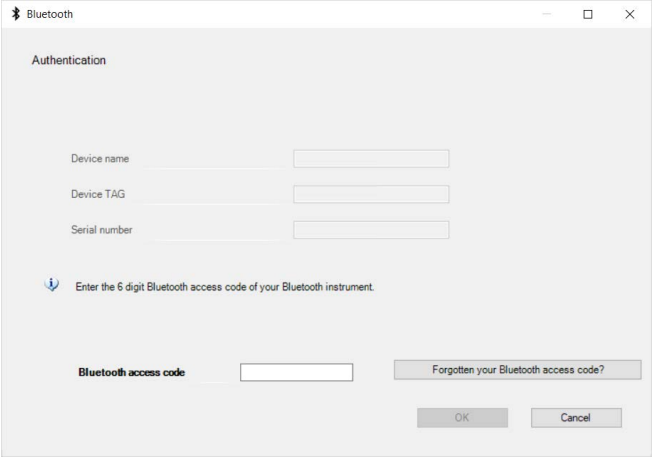

You can find the code on the information sheet "*PINs and Codes*" in the device packaging:

Note:
If an incorrect code is entered, the code can only be entered again after a delay time. This time gets longer after each incorrect entry.

The message "*Waiting for authentication*" is displayed on the PC.

Connected

After connection, the DTM appears.

If the connection is interrupted, e.g. due to a too large distance between controller and PC, this is displayed on the PC. The message disappears when the connection is restored.

Change device code

Parameter adjustment of the device is only possible if the parameter protection is deactivated. When delivered, parameter protection is deactivated by default and can be activated at any time.

It is recommended to enter a personal 6-digit device code. To do this, go to menu "*Extended functions*", "*Access protection*", menu item "*Protection of the parameter adjustment*".

9.3 Parameter adjustment

Prerequisites

For parameter adjustment of the instrument via a Windows PC, the configuration software PACTware and a suitable instrument driver (DTM) according to FDT standard are required. The latest PACTware version as well as all available DTMs are compiled in a DTM Collection. The DTMs can also be integrated into other frame applications according to FDT standard.

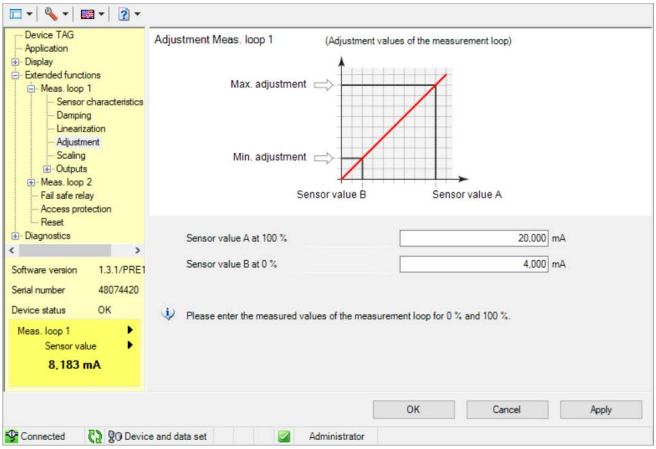

Fig. 8: Example of a DTM view - Adjustment

10 Applications and functions

The controller contains already preset applications and functions, which can be easily adjusted by means of an application assistant via PACTware/DTM or the VEGA Tools app. The following applications/ functions are described here as examples.

- Level measurement in storage tanks with overfill protection/dry run protection
- Pump station with pump control function
- Screen control
- Flow measurement flume/weir

10.1 Application example

ToDo

11 Diagnostics and servicing

11.1 Maintenance

Maintenance

If the device is used properly, no special maintenance is required in normal operation.

Cleaning

The cleaning helps that the type label and markings on the instrument are visible.

Take note of the following:

- Use only cleaning agents that do not damage the housing, type plate or seals, e.g. a cloth dampened with water
- Use only cleaning methods corresponding to the housing protection rating

11.2 Rectify faults

Reaction when malfunction occurs

The operator of the system is responsible for taking suitable measures to rectify faults.

Causes of malfunction

The device offers maximum reliability. Nevertheless, faults can occur during operation. These may be caused by the following, e.g.:

- Measured value from sensor not correct
- Voltage supply
- Interference in the cables

Fault rectification

The first measures are:

- Evaluation of fault messages
- Checking the input/output signal

A smartphone/tablet with the VEGA Tools app or a PC/notebook with the software PACTware and the suitable DTM offer you further comprehensive diagnostic possibilities. In many cases, the causes can be determined in this way and the malfunctions eliminated.

Reaction after fault rectification

Depending on the reason for the fault and the measures taken, the steps described in chapter "*Setup*" must be carried out again or must be checked for plausibility and completeness.

24 hour service hotline

Should these measures not be successful, please call in urgent cases the VEGA service hotline under the phone no. **+49 1805 858550**.

The hotline is also available outside normal working hours, seven days a week around the clock.

Since we offer this service worldwide, the support is provided in English. The service itself is free of charge, the only costs involved are the normal call charges.

11.3 Diagnosis, fault messages

Fault signal

The controller and the connected sensors are permanently monitored during operation and the values entered during parameter adjustment are checked for plausibility. If irregularities occur or in case of

incorrect parameter adjustment, a fault signal is triggered. In case of an instrument defect and a failed data transfer, a fault signal is also triggered.

The fault indication lights up in case of failure and the current output as well as the relays react according to the configured fault mode. If the fail safe relay was configured, it will deenergize. In addition, one of the following error messages is outputted on the display and the background lighting changes to colour acc. to NAMUR NE 107 (e.g. red in case of a fault, orange in case of a function check).

Failure

Error code	Cause	Rectification
F003 Hardware: CRC error	CRC error (error with self-check)	Switch the instrument off/on Carry out a reset Send instrument for repair
F008 Sensor not accessible	No sensor data has been received for some time	Reduce distance to the sensor Use external antenna Exchange battery in the sensor
F012 Sensor input: Hardware error	Hardware error, sensor input	Switch the instrument off and on Send instrument for repair
F013 Sensor input: Sensor error	The input of the measuring point returns an error The connected sensor returns an error	Switch device/sensor off an on Send device/sensor for repair
F034 EEPROM: CRC error	EEPROM: CRC error	Switch the instrument off and on Carry out a reset Send instrument for repair
F035 ROM: CRC error	ROM: CRC error	Switch the instrument off and on Carry out a reset Send instrument for repair
F036 No operable software	No executable program Software update failed	Carry out another software update Send instrument for repair
F037 RAM	RAM defective	Switch the instrument off and on Carry out a reset Send instrument for repair
F039 No join within 24 hours	No join request was received from the sensor 24 hours after the NFC/DTM pairing	Place the sensor next to VEGAMET Air 141 and perform a manual join on the sensor
F040 General hardware error	Hardware error	Switch the instrument off and on Carry out a reset Send instrument for repair

Out of specification

Error code	Cause	Rectification
S016 Adjustment: Min./Max. exchanged	The min./max. adjustment points were exchanged.	Carry out the adjustment again, correct the min. and max. values.
S017 Adjustment: Span too small	Adjustment span too small	Carry out a fresh adjustment and increase the distance between min./max. adjustment
S021 Scaling: Span too small	Scaling span too small	Carry out a fresh scaling, increase the distance between min./max. scaling.
S022 Scaling: Scaling value too large	Value for one of the two scaling points is too large	Carry out the scaling again, correct the min. and max. values.
S062 Pulse priority too small	Pulse priority too small	Increase under "*Output*" the entry "*Pulse output all*" so that max. one pulse per second is output.
S110 Relay: Span too small	Relay switching points too close together	Increase the difference between the two relay switching points
S111 Relay: Switching points interchanged	Relay switching points interchanged	Change relay switching points for "*On/Off*"
S115 Pump control: Faulty interference behaviour	Several relays are assignef to the pump control which are not set to the same failure mode	All relays which are assigned to the pump control must be set to the same failure mode
S116 Pump control: Operating mode faulty	Several relays that are not configured with the same mode are assigned to the pump control	All relays which are assigned to the pump control must be set to the same mode

Function check

Error code	Cause	Rectification
C029 Simulation	Simulation active	Finish simulation

11.4 Software update

An update of the device software is possible via the Bluetooth interface.

The following components are required:

- Instrument
- Voltage supply
- PC/Notebook with PACTware/DTM
- Current instrument software as file

You can find the current instrument software as well as detailed information on the procedure in the download area of our homepage: **www.vega.com**.

Caution:
Instruments with approvals can be bound to certain software versions. Therefore make sure that the approval is still effective after a software update is carried out.

You can find detailed information in the download area at **www.vega.com**.

11.5 How to proceed if a repair is necessary

On our homepage you will find detailed information on how to proceed in the event of a repair.

So that we can carry out the repair quickly and without queries, generate a instrument return form there with the data of your device.

The following is required:

- The serial number of the instrument
- A short description of the fault
- Where applicable, details of the medium and process conditions

Print the generated instrument return form.

Clean the instrument and pack it damage-proof.

Send the printed instrument return form and possibly a safety data sheet together with the device.

You will find the address for the return on the generated instrument return form.

12 Dismount

12.1 Dismounting steps

Take note of chapters "*Mounting*" and "*Connecting to voltage supply*" and carry out the listed steps in reverse order.

12.2 Disposal

Pass the instrument on to a specialised recycling company and do not use the municipal collecting points.

Remove any batteries in advance, if they can be removed from the device, and dispose of them separately.

If personal data is stored on the old device to be disposed of, delete it before disposal.

If you have no way to dispose of the old instrument properly, please contact us concerning return and disposal.

13 Certificates and approvals

13.1 Radio licenses

Bluetooth
The Bluetooth radio module in the device has been tested and approved according to the current edition of the applicable country-specific norms or standards.

The confirmations as well as regulations for use can be found in the document "*Radio licenses*" supplied or on our homepage.

LoRaWAN
The radio module in the device has been tested and approved according to the current edition of the applicable country-specific norms or standards.

The confirmations as well as regulations for use can be found in the document "*Radio licenses*" supplied or on our homepage.

NFC
The radio module in the device has been tested and approved according to the current edition of the applicable country-specific norms or standards.

The confirmations as well as regulations for use can be found in the document "*Radio licenses*" supplied or on our homepage.

13.2 Conformity

The device complies with the legal requirements of the applicable country-specific directives or technical regulations. We confirm conformity with the corresponding labelling.

The corresponding conformity declarations can be found on our homepage.

Electromagnetic compatibility
The instrument is designed for use in an industrial environment. Nevertheless, electromagnetic interference from electrical conductors and radiated emissions must be taken into account, as is usual with a class A instrument according to EN 61326-1. If the instrument is used in a different environment, its electromagnetic compatibility with other devices must be ensured by suitable measures.

13.3 Environment management system

Protection of the environment is one of our most important duties. That is why we have introduced an environment management system with the goal of continuously improving company environmental protection. The environment management system is certified according to DIN EN ISO 14001.

Help us to meet these requirements and observe the environmental instructions in the chapters "*Packaging, transport and storage*", "*Disposal*" of this instructions manual.

14 Supplement

14.1 Technical data

Note for approved instruments

The technical data in the respective safety instructions are valid for approved instruments (e.g. with Ex approval). In some cases, these data can differ from the data listed herein.

All approval documents can be downloaded from our homepage.

Materials and weights	
Materials	
– Housing	PC-FR, PA66-FR
– Inspection window	PE
Weight	260 g (0.57 lbs)

Voltage supply	
Operating voltage	
– Nominal voltage AC	100 … 230 V∿ (-15 %, +10 %) 50/60 Hz
– Nominal voltage DC	24 … 65 V = (-15 %, +10 %)
Power consumption	max. 16 VA; 6 W

Sensor input	
Number of sensors	1 x wireless sensor
Measured value transmission	LoRaWAN

Relay output	
Quantity	3 x operating relay, one can be configured as fail safe relay
Function	Switching relay for level, fault signal or pulse relay for flow/sampling pulse, pump control
Contact	Floating change-over contact (SPDT)
Contact material	AgSnO2, hard gold-plated
Switching voltage	max. 250 V AC/60 V DC
Switching current	max. 1 A AC (cos phi > 0.9), 1 A DC
Breaking capacity[2)]	min. 50 mW, max. 250 VA, max. 40 W DC (with U < 40 V DC)
AC/DC operation	Mixed operation with hazardous voltages (> 30 V AC, > 60 V DC) and non-hazardous voltages (< 30 V AC, < 60 V DC) is not permitted for the relay outputs.
Min. programmable switching hysteresis	0.1 %

[2)] If inductive loads or stronger currents are switched through, the gold plating on the relay contact surface will be permanently damaged. The contact is then no longer suitable for switching low-level signal circuits.

Mode pulse output	
– Pulse length	350 ms

Current output	
Quantity	2 x output
Function	Level/flow/sampling pulse
Range	0/4 … 20 mA, 20 … 0/4 mA
Resolution	1 µA
Max. load	500 Ω
Fault signal (switch over)	0; < 3.6; 4; 20; 20.5; 22 mA
Accuracy	
– Standard	±20 µA (0.1 % of 20 mA)
– with EMC interferences	±80 µA (0.4 % of 20 mA)
Temperature error relating to 20 mA	0.005 %/K
Mode pulse output	
– Current pulse	20 mA
– Pulse length	200 ms

LoRaWAN	
Effective range[3)]	up to 15 km (9,3 mi)
External antenna	
– Magnetic base omnidirectional antenna with base plate (included)	2.5 dBi (863 MHz … 870 MHz), 2.3 dBi (902 MHz … 928 MHz)
– Antenna gain	< 3 dBi
– Cable length	3 m (9,8 ft)
– Antenna connection	RPSMA(F)
LoRaWAN region	EU863-870, US902-928, AU915-928, AS923-1
Frequencies	
– EU868	863 MHz … 870 MHz
– US915	902 MHz … 928 MHz
– IN865	865 MHz … 867 MHz
– RU864	864 MHz … 870 MHz
– AU915	915 MHz … 928 MHz
– AS923	915 MHz … 928 MHz
– KR920	920.9 MHz … 923.3 MHz
Max. emitted power	
– EU863-870	14 dBm
– US902-928	26 dBm
– AU915-928	26 dBm
– AS923-1	16 dBm

3) Depending on the local conditions

– IN865	26 dBm
– RU864	14 dBm
LoRaWAN Specification Version	V1.0.4
LoRaWAN Regional Parameters Version	RP002-1.0.4
Class of Operation	A
Optional ADR Feature Supported	Yes
Activation	OTAA

Bluetooth interface	
Bluetooth standard	Bluetooth 5.0
Frequency	2.402 … 2.480 GHz
Antenna	Internal
Max. emitted power	+2.2 dBm
Max. number of participants	1
Effective range[4)]	up to 50 m (164 ft)

NFC reader	
Frequency	13.56 MHz
Transmission power	< 60 dBµA/m
Antenna	Integrated loop
Effective range	typically 4 cm (1.5 in)

Electromechanical data	
Connection terminals	
– Type of terminal	Screw terminal
– Wire cross-section	0.25 mm^2 (AWG 23) … 2.5 mm^2 (AWG 12)

Indicators	
Measured value indication	
– Graphic-capable LC display, with lighting	25 x 20 mm, digital and quasianalogue display
– Indication range	-9999999 … 9999999
LED displays	
– Status, operating voltage	LED green
– Status fault signal	LED red
– Status, operating relay	LED yellow
Status display via backlight	Colour signalling according to NAMUR NE 107 (red/orange/yellow/blue) or freely configurable

Adjustment	
Adjustment elements	Turn/Push button
PC/Notebook	PACTware/DTM

4) Depending on the local conditions

11104030-EN-260703

Smartphone/Tablet	VEGA Tools app

Ambient conditions	
Ambient temperature	
– Instrument in general	-20 … +60 °C (-4 … +140 °F)
– Display (readability)	-20 … +60 °C (-4 … +140 °F)
Storage and transport temperature	-40 … +80 °C (-40 … +176 °F)
Relative humidity	< 96 %

Mechanical environmental conditions	
Vibrations (oscillations)	Class 4M4 acc. to IEC 60721-3-4 (1 g, 4 … 200 Hz)
Impacts (mechanical shock)	Class 6M4 acc. to IEC 60721-3-6 (10 g/11 ms, 30 g/6 ms, 50 g/2.3 ms)

Electrical protective measures	
Protection rating	IP20 (IEC 60529)
Altitude above sea level	up to 5000 m (16404 ft)
Overvoltage category (IEC 61010-1)	II
Protection class	II
Pollution degree	2

Protection against dangerous body currents

Reliable separation according to IEC/EN 61140 by reinforced insulation according to IEC/EN 61010 part 1 up to 253 V AC/DC with overvoltage category II and fulfilled protection class between the supply, signal and relay circuits.

Sensor inputs (active) are energy limited circuits according to IEC/UL 61010 part 1.

14.2 Overview applications/functionality

The following charts provide an overview of the standard applications and functions of VEGAMET Air series controllers. They give also information about whether the respective function can be activated and adjusted via the integrated indicating and adjustment unit (OP) or via DTM/app.[5)]

Applications (adjustable with DTM/app)	**VEGAMET Air**		**Adjustment**	
	141 841	**142 842**	**OP**	**DTM/ App**
Universal	•	•	•	•
Level - storage tank	•	•		•
Calculation - difference		•		•
Calculation - total		•		•
Calculation - average value		•		•
Wells	•	•		•
Pumping station	•	•		•

5) OP: Operating Panel (integrated display and adjustment unit)

Applications (adjustable with DTM/app)	VEGAMET Air		Adjustment	
	141 841	142 842	OP	DTM/ App
Sewage screw lifting station	•	•		•
Screen control		•		•
Flow measurement flume/weir	•	•		•
Pressurized vessel		•		•

Additional application examples	VEGAMET Air		Adjustment	
	141 841	142 842	OP	DTM/ App
Level measurement	•	•		•
Gauge measurement	•	•		•
Process pressure measurement	•	•		•
Overflow basin		•		•
Density		•		•

Functions	VEGAMET Air		Adjustment	
	141 841	142 842	OP	DTM/ App
Application wizard	•	•		•
Indication measured values	•	•	•	•
Automatic display change	•	•	•	•
Display multilingual	•	•	•	•
Sensor input 4 … 20 mA	•	•	•	•
Linearization - preset curves	•	•	•	•
Linearization - Dimensions ISO standard	•	•		•
Linearization - Flow formula	•	•		•
Linearization - Manufacturer definition	•	•		•
Linearization - Calculation wizard	•	•		•
Linearization - Bearing table	•	•		•
Linearization - Gauging by litres	•	•		•
Linearization curves - Import	•	•		•
Adjustment of the measuring point	•	•	•	•
Scaling	•	•	•	•
Totalizer 1/2	•	•	•	•
Totalizer 3/4/5/6		•		•
Relay mode - Overfill protection	•	•	•	•
Relay mode - Dry run protection	•	•	•	•

Functions	VEGAMET Air		Adjustment	
	141 841	142 842	OP	DTM/ App
Relay mode - Switching window ON	•	•		•
Relay mode - Switching window OFF	•	•		•
Relay mode - Flow rate pulse	•	•		•
Relay mode - Sampling pulse	•	•		•
Relay mode - Rising tendency	•	•		•
Relay mode - Falling tendency	•	•		•
Relay mode - Pump control 1 (same running time)	•	•		•
Relay mode - Pump control 2 (same running time)	•	•		•
Relay mode - Pump control 3 (fixed sequence)	•	•		•
Relay mode - Pump control 4 (fixed sequence)	•	•		•
Mode - Pump control - Sequenced operation	•	•		•
Mode - Pump control - Alternating pump operation	•	•		•
Dry weather pump	•	•		•
Forced pump changeover	•	•		•
Relay switch on and off delay	•	•		•
Bandwidth for switching points	•	•		•
Fail safe relay	•	•	•	•
Current output - 0/4 … 20 mA, 20 … 4 mA	•	•	•	•
Current output - Flow rate pulse	•	•		•
Current output - Sampling pulse	•	•		•
Diagnosis - Status	•	•	•	•
Diagnosis - Measured values	•	•	•	•
Simulation - Sensor value, %, lin% value, scaled values	•	•	•	•
Simulation - current output	•	•		•
Simulation - relay output	•	•		•
Protection of the parameterization	•	•	•	•
Bluetooth access code	•	•	•	•
Activate/deactivate Bluetooth communication	•	•	•	

14.3 Dimensions

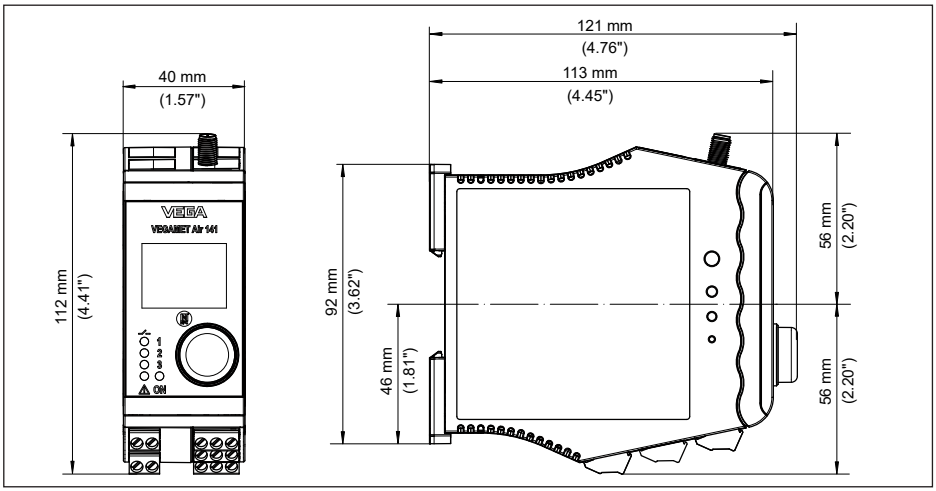

Fig. 9: Dimensions VEGAMET Air 141

14.4 Industrial property rights

VEGA product lines are global protected by industrial property rights. Further information see www.vega.com.

VEGA Produktfamilien sind weltweit geschützt durch gewerbliche Schutzrechte.

Nähere Informationen unter www.vega.com.

Les lignes de produits VEGA sont globalement protégées par des droits de propriété intellectuelle. Pour plus d'informations, on pourra se référer au site www.vega.com.

VEGA lineas de productos están protegidas por los derechos en el campo de la propiedad industrial. Para mayor información revise la pagina web www.vega.com.

Линии продукции фирмы ВЕГА защищаются по всему миру правами на интеллектуальную собственность. Дальнейшую информацию смотрите на сайте www.vega.com.

VEGA系列产品在全球享有知识产权保护。

进一步信息请参见网站<www.vega.com。

14.5 Licensing information for open source software

Open source software components are also used in this device. A documentation of these components with the respective license type, the associated license texts, copyright notes and disclaimers can be found on our homepage.

14.6 Trademark

All the brands as well as trade and company names used are property of their lawful proprietor/originator.

Printing date:

All statements concerning scope of delivery, application, practical use and operating conditions of the sensors and processing systems correspond to the information available at the time of printing.
Subject to change without prior notice

© VEGA Grieshaber KG, Schiltach/Germany 2026

1104030-EN-260703

VEGA Grieshaber KG
Am Hohenstein 113
77761 Schiltach
Germany

Phone +49 7836 50-0
E-mail: info.de@vega.com
www.vega.com

VEGA Grieshaber KG
Am Hohenstein 113
77761 Schiltach
Germany

VEGAMET Air 141
VEGAMET Air 142

European Union

Hereby, VEGA Grieshaber KG declares that the radio equipment type VEGAMET Air 141, VEGAMET Air 142 are in compliance with Directive 2014/53/EU.
The complete documentation of the device, including the full text of the EU declaration of conformity, is available at the following internet address: www.vega.com/sn using the Device search by entering the serial number.

USA

FCC ID: O6QMETA14X
Contains FCC ID: SQGBL652

FCC § 15.19 Labelling requirements
This device complies with part 15 of the FCC Rules and Industry Canada license-exempt RSS standard(s). Operation is subject to the following two conditions:

(1) This device may not cause harmful interference, and
(2) this device must accept any interference received, including interference that may cause undesired operation.

FCC § 15.21 Information to user
"Changes or modifications not expressly approved by the party responsible for compliance could void the user's authority to operate the equipment."

FCC §15.105 statement
This equipment has been tested and found to comply with the limits for a Class B digital device, pursuant to part 15 of the FCC Rules. These limits are designed to provide reasonable protection against harmful interference in a residential installation. This equipment generates, uses and can radiate radio frequency energy and, if not installed and used in accordance with the instructions, may cause harmful interference to radio communications. However, there is no guarantee that interference will not occur in a particular installation. If this equipment does cause harmful interference to radio or television reception, which can be determined by turning the equipment off and on, the user is encouraged to try to correct the interference by one or more of the following measures:

- Reorient or relocate the receiving antenna.
- Increase the separation between the equipment and receiver.
- Connect the equipment into an outlet on a circuit different from that to which the receiver is connected.
- Consult the dealer or an experienced radio/TV technician for help.

RF Exposure Requirements
To comply with FCC RF exposure compliance requirements, the device must be installed to provide a separation distance of at least 20 cm from all persons.

Canada

IC: 3892A-META14X
Contains IC: 3147A-BL652

This device complies with part 15 of the FCC Rules and Industry Canada license-exempt RSS standard(s). Operation is subject to the following two conditions:

(1) This device may not cause harmful interference, and
(2) this device must accept any interference received, including interference that may cause undesired operation.

Le présent appareil est conforme aux CNR d'Industrie Canada applicables aux appareils radio exempts de licence. L'exploitation est autorisée aux deux conditions suivantes:
(1) l'appareil ne doit pas produire de brouillage, et
(2) l'utilisateur de l'appareil doit accepter tout brouillage radioélectrique subi, même si le brouillage est susceptible d'en compromettre le fonctionnement.

Canada Class B statement
This Class B digital apparatus complies with Canadian ICES-003.
Cet appareil numérique de la classe B est conforme à la norme NMB-003 du Canada.

RF Exposure Requirements
This equipment complies with Canada radiation exposure limits set forth for an uncontrolled environment. This equipment should be installed and operated with minimum distance 20cm between the radiator and your body.

Déclaration d'exposition aux radiations:
Cet équipement est conforme aux limites d'exposition aux rayonnements IC établies pour un environnement non contrôlé. Cet équipement doit être installé et utilisé avec un minimum de 20 cm de distance entre la source de rayonnement et votre corps.

VEGA Grieshaber KG
Am Hohenstein 113
77761 Schiltach
Germany

United Kingdom

Thailand

United Arab Emirates

South Africa

Malaysia*

Australia

Serbia

New Zealand

South Korea

1169826-UN-260408