Operating Instructions

External radio unit for HART sensors

PLICSMOBILE T81/B81/S81

External GSM/GPRS/UMTS radio unit

Optionally with battery/accumulator/solar panel

Document ID: 55234

Contents

1 About this document

1.1 Function ... 4
1.2 Target group ... 4
1.3 Symbols used ... 4

2 For your safety

2.1 Authorised personnel ... 5
2.2 Appropriate use ... 5
2.3 Warning about incorrect use ... 5
2.4 General safety instructions ... 5
2.5 Safety label on the instrument ... 5
2.6 EU conformity ... 6
2.7 Radio license for Europe ... 6
2.8 Radio license for USA ... 6
2.9 Radio license for Canada ... 7
2.10 Environmental instructions ... 7

3 Product description

3.1 Configuration ... 8
3.2 Principle of operation ... 9
3.3 Adjustment ... 9
3.4 Packaging, transport and storage ... 9

4 Mounting

4.1 General instructions ... 11
4.2 Installation procedure ... 11

5 Connecting to power supply

5.1 Preparing the connection ... 14
5.2 Connection options ... 14
5.3 Connection steps sensor connection cable ... 15
5.4 Connection steps voltage supply ... 15
5.5 Wiring plan ... 17

6 Battery operation and power saving mode

6.1 Battery/accumulator operation ... 19
6.2 External battery PLICSMOBILE B81 ... 19
6.3 Solar panel PLICSMOBILE S81 ... 20
6.4 Battery sizing ... 22
6.5 Power options ... 23

7 Setup

7.1 Adjustment system ... 25
7.2 Communication via Bluetooth ... 25
7.3 Parameter adjustment with PC and PACTware ... 26
7.4 Mobile network and SIM card ... 27
7.5 Internet connection and measured value transmission ... 29

8 Maintenance and fault rectification

8.1 Maintenance ... 32
8.2 Rectify faults ... 32
8.3 How to proceed if a repair is necessary ... 33

55234-EN-170206

9 Dismount
9.1 Dismounting steps 34
9.2 Disposal 34

10 Supplement
10.1 Technical data 35
10.2 Dimensions 39
10.3 Industrial property rights 41
10.4 Hash function acc. to mbed TLS 41
10.5 Trademark 41

Supplementary documentation

Information:
Supplementary documents appropriate to the ordered version come with the delivery. You can find them listed in chapter "*Product description*".

Editing status: 2017-01-31

1 About this document

1.1 Function

This operating instructions manual provides all the information you need for mounting, connection and setup as well as important instructions for maintenance and fault rectification. Please read this information before putting the instrument into operation and keep this manual accessible in the immediate vicinity of the device.

1.2 Target group

This operating instructions manual is directed to trained specialist personnel. The contents of this manual should be made available to these personnel and put into practice by them.

1.3 Symbols used

Information, tip, note
This symbol indicates helpful additional information.

Caution: If this warning is ignored, faults or malfunctions can result.

Warning: If this warning is ignored, injury to persons and/or serious damage to the instrument can result.

Danger: If this warning is ignored, serious injury to persons and/or destruction of the instrument can result.

Ex applications
This symbol indicates special instructions for Ex applications.

SIL applications
This symbol indicates instructions for functional safety which must be taken into account particularly for safety-relevant applications.

- **List**
  The dot set in front indicates a list with no implied sequence.

→ **Action**
This arrow indicates a single action.

1 **Sequence of actions**
Numbers set in front indicate successive steps in a procedure.

Battery disposal
This symbol indicates special information about the disposal of batteries and accumulators.

55234-EN-170206

2 For your safety

2.1 Authorised personnel

All operations described in this operating instructions manual must be carried out only by trained specialist personnel authorised by the plant operator.

During work on and with the device the required personal protective equipment must always be worn.

2.2 Appropriate use

The PLICSMOBILE T81 is an external mobile network unit for transmission of measured values and for remote parameter adjustment of plics® sensors.

Operational reliability is ensured only if the instrument is properly used according to the specifications in the operating instructions manual as well as possible supplementary instructions.

For safety and warranty reasons, any invasive work on the device beyond that described in the operating instructions manual may be carried out only by personnel authorised by the manufacturer. Arbitrary conversions or modifications are explicitly forbidden.

2.3 Warning about incorrect use

Inappropriate or incorrect use of the instrument can give rise to application-specific hazards, e.g. vessel overfill or damage to system components through incorrect mounting or adjustment.

2.4 General safety instructions

This is a state-of-the-art instrument complying with all prevailing regulations and guidelines. The instrument must only be operated in a technically flawless and reliable condition. The operator is responsible for the trouble-free operation of the instrument.

During the entire duration of use, the user is obliged to determine the compliance of the necessary occupational safety measures with the current valid rules and regulations and also take note of new regulations.

The safety instructions in this operating instructions manual, the national installation standards as well as the valid safety regulations and accident prevention rules must be observed by the user.

For safety and warranty reasons, any invasive work on the device beyond that described in the operating instructions manual may be carried out only by personnel authorised by the manufacturer. Arbitrary conversions or modifications are explicitly forbidden.

The safety approval markings and safety tips on the device must also be observed.

2.5 Safety label on the instrument

The safety approval markings and safety tips on the device must be observed.

2.6 EU conformity

The device fulfils the legal requirements of the applicable EU guidelines. By affixing the CE marking, we confirm successful testing of the product.

You can find the EU conformity declaration on our website under www.vega.com/downloads.

2.7 Radio license for Europe

The instrument was tested according to the latest issues of the harmonized standards:

- EN 300328
- EN 301511
- EN 301908-1
- EN 301908-2
- EN 300440

It is hence approved for use inside closed vessels in countries of the EU and EFTA.

2.8 Radio license for USA

This approval is only valid for USA. Hence the following text is only available in the English language:

This device complies with Part 15 of the FCC Rules. Operation is subject to the following two conditions:

- This device may not cause interference, and
- This device must accept any interference, including interference that may cause undesired operation of the device

Changes or modifications not expressly approved by the manufacturer could void the user's authority to operate this equipment.

This device is approved for unrestricted use only inside closed, stationary vessels made of metal, reinforced fiberglass or concrete.

This equipment complies with FCC radiation exposure limits set forth for an uncontrolled environment. This equipment should be installed and operated with minimum distance of 20 cm cm between the radiator and your body. This transmitter must not be co-located or operating in conjunction with any other antenna or transmitter.

This equipment has been tested and found to comply with the limits for a Class B digital device, pursuant to Part 15 of the FCC Rules. These limits are designed to provide reasonable protection against harmful interference in a residential installation. This equipment generates, uses and can radiate radio frequency energy and, if not installed and used in accordance with the instructions, may cause harmful interference to radio communications. However, there is no guarantee that interference will not occur in a particular installation. If this equipment does cause harmful interference to radio or television reception, which can be determined by turning the equipment off and on, the user is encouraged to try to correct the interference by one or more of the following measures:

- Reorient or relocate the receiving antenna

- Increase the separation between the equipment and receiver
- Connect the equipment into an outlet on a circuit different from that to which the receiver is connected
- Consult the dealer or an experienced radio/TV technician for help

2.9 Radio license for Canada

This approval is only valid for Canada. Hence the following texts are only available in the English/French language:

This device complies with Industry Canada's license-exempt RSS standard(s). Operation is subject to the following conditions:

- This device may not cause interference, and
- This device must accept any interference, including interference that may cause undesired operation of the device

This equipment complies with IC radiation exposure limits set forth for an uncontrolled environment. This equipment should be installed and operated with minimum distance of 20 cm cm between the radiator and your body. This transmitter must not be co-located or operating in conjunction with any other antenna or transmitter.

Le présent appareil est conforme aux CNR d'Industrie Canada applicables aux appareils radio exempts de licence. L'exploitation est autorisée aux conditions suivantes:

- L'appareil ne doit pas produire de brouillage; et
- L'utilisateur de l'appareil doit accepter tout brouillage radioélectrique subi, même si le brouillage est susceptible d'en compromettre le fonctionnement.

Cet équipement est conforme aux limites d'exposition aux rayonnements IC établies pour un environnement non contrôlé. Cet équipement doit être installé et utilisé avec un minimum de 20 cm cm de distance entre la source de rayonnement et votre corps. Ce transmetteur ne doit pas être place au même endroit ou utilise simultanément avec un autre transmetteur ou antenne.

2.10 Environmental instructions

Protection of the environment is one of our most important duties. That is why we have introduced an environment management system with the goal of continuously improving company environmental protection. The environment management system is certified according to DIN EN ISO 14001.

Please help us fulfil this obligation by observing the environmental instructions in this manual:

- Chapter "*Packaging, transport and storage*"
- Chapter "*Disposal*"

3 Product description

3.1 Configuration

Scope of delivery

The scope of delivery encompasses:

- PLICSMOBILE T81
- Sensor connection cable (optional)
- Documentation
  - This operating instructions manual
  - If necessary, further certificates

Constituent parts

The PLICSMOBILE T81 consists of the components:

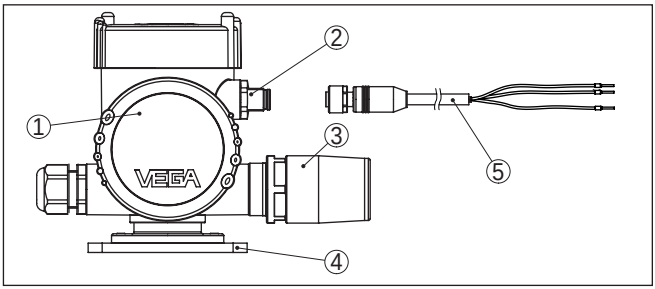

Fig. 1: PLICSMOBILE T81

1 Electronics compartment
2 Plug connector for connection of the sensor
3 Antenna
4 Mounting plate
5 Sensor connection cable

Type label

The type label contains the most important data for identification and use of the instrument:

- Instrument type
- Product code
- Approvals
- Technical data
- Serial number of the instrument
- Data matrix code for smartphone app

Serial number

The type label contains the serial number of the instrument. With it you can find the following data on our homepage:

- Product code of the instrument (HTML)
- Delivery date (HTML)
- Order-specific instrument features (HTML)
- Operating instructions at the time of shipment (PDF)

Go to "www.vega.com", "*VEGA Tools*" and "*Instrument search*". Enter the serial number.

Alternatively, you can access the data via your smartphone:

- Download the smartphone app "*VEGA Tools*" from the "*Apple App Store*" or the "*Google Play Store*"
- Scan the Data Matrix code on the type label of the instrument or

55234-EN-170206

- Enter the serial number manually in the app

3.2 Principle of operation

Application area

The PLICSMOBILE T81 is a mobile network unit for transmission of measured values and for remote parameter adjustment of plics® sensors. Due to the large operating voltage range and the integrated power saving functions, a mains-independent power supply via battery or accumulator/solar cells is possible. Typical applications are measured value transmission from mobile vessels, battery-operated level measurement and deep well measurement.

The measured value and message transmission can be optionally carried out via e-mail or SMS. Furthermore, the measured values can be transmitted via https for visualisation in "*VEGA Inventory System*". The use of PLICSMOBILE T81 is particularly suitable for inventory management, VMI (Vendor Managed Inventory) and remote enquiry.

Functional principle

The external mobile network unit PLICSMOBILE T81 can be connected to any 4 … 20 mA HART two-wire sensor of the plics® series. In HART Multidrop operation up to 15 sensors can be connected to a PLICSMOBILE T81 (max. five with Ex version).

The transmission of measured values, event messages and diagnostic information to the user is carried out via the GSM/GPRS network. Thanks to quadband technology, the device can be used virtually anywhere in the world. There is also the option of accessing the connected sensor via remote parameter adjustment.

Voltage supply

Power is supplied via a standard low voltage source (external power supply unit/battery/accumulator/solar panel) or via the optionally available PLICSMOBILE B81. You can find detailed specifications on the power supply in chapter "*Technical data*".

The PLICSMOBILE T81 normally supplies power to the connected sensors.

3.3 Adjustment

The device is adjusted via PACTware and the corresponding DTM. The connection is made via the Bluetooth module integrated in PLICSMOBILE T81.

3.4 Packaging, transport and storage

Packaging

Your instrument was protected by packaging during transport. Its capacity to handle normal loads during transport is assured by a test based on ISO 4180.

The packaging of standard instruments consists of environment-friendly, recyclable cardboard. For special versions, PE foam or PE foil is also used. Dispose of the packaging material via specialised recycling companies.

Transport

Transport must be carried out in due consideration of the notes on the transport packaging. Nonobservance of these instructions can cause damage to the device.

Transport inspection

The delivery must be checked for completeness and possible transit damage immediately at receipt. Ascertained transit damage or concealed defects must be appropriately dealt with.

Storage

Up to the time of installation, the packages must be left closed and stored according to the orientation and storage markings on the outside.

Unless otherwise indicated, the packages must be stored only under the following conditions:

- Not in the open
- Dry and dust free
- Not exposed to corrosive media
- Protected against solar radiation
- Avoiding mechanical shock and vibration

Storage and transport temperature

- Storage and transport temperature see chapter "*Supplement - Technical data - Ambient conditions*"
- Relative humidity 20 … 85 %

4 Mounting

4.1 General instructions

Mounting options

In the standard version, the PLICSMOBILE T81 is designed for wall mounting. Mounting adapters for carrier rail mounting (top hat rail 35 x 7.5 according to DIN EN 50022/60715) as well as for tube mounting are optionally available.

Installation position

Check before mounting if a sufficient network coverage (signal strength) of the mobile network provider is available at the planned location. This can be simply tested by means of a mobile phone. Keep in mind that the SIM cards in the PLICSMOBILE T81 and in the mobile phone are from the same mobile phone provider or work in the same mobile phone network. If the radio reception is too weak, you should search for a better position. In closed rooms this would be, for example, close to a window or at least closer to an outer wall.

Note:
During operation, a distance of at least 20 cm should be kept between the antenna and persons working nearby. Operation of the instrument with smaller distances is not recommended.

Moisture

Use the recommended cables (see chapter "*Connecting to power supply*") and tighten the cable gland.

You can give your instrument additional protection against moisture penetration by leading the connection cable downward in front of the cable entry. Rain and condensation water can thus drain off. This applies mainly to outdoor mounting as well as installation in areas where high humidity is expected (e.g. through cleaning processes) or on cooled or heated vessels.

4.2 Installation procedure

Wall mounting

The PLICSMOBILE T81 for wall mounting is supplied with a mounting base for screw mounting.

→ Fasten the instrument with four appropriate screws (not included in the delivery) according to the following illustration.

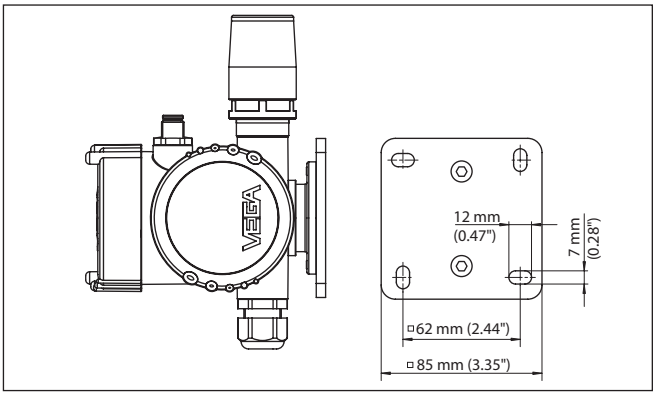

Fig. 2: PLICSMOBILE T81 for wall mounting, bottom view of mounting plate.

Carrier rail mounting

The PLICSMOBILE T81 for top hat rail mounting is supplied with an already assembled adapter for fastening on a 35 x 7.5 carrier rail.

→ Snap the instrument without tools onto the top hat rail. Loosening from the top hat rail is also carried out without tools. Through the integrated spring, you just have to apply slight lateral pressure to the instrument.

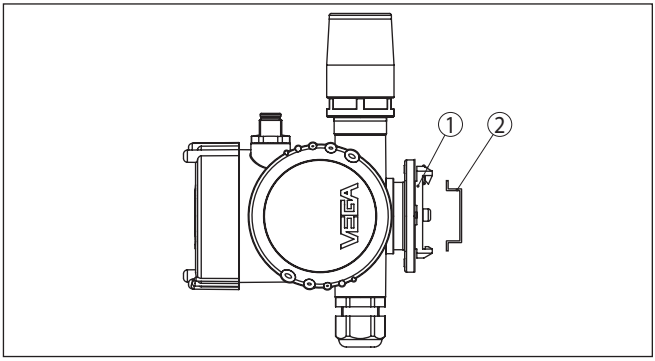

Fig. 3: PLICSMOBILE T81 for carrier rail mounting

1 Adapter plate
2 Carrier rail

Tube mounting

The PLICSMOBILE T81 for tube mounting is supplied with a measuring instrument holder and four hexagon socket screws M5 x 12 as unassembled mounting accessory.

→ Mount the measuring instrument holder according to the following illustration to the socket of PLICSMOBILE T81. Then you can fasten the instrument with the bent strap to your tube.

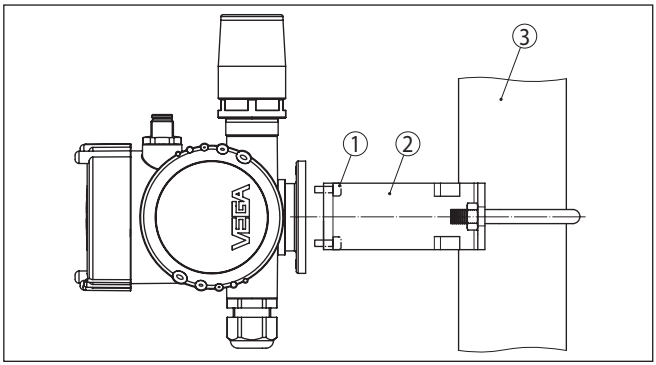

Fig. 4: PLICSMOBILE T81 for tube mounting

1 4 screws M5 x 12
2 Measuring instrument holder
3 Tube

5 Connecting to power supply

5.1 Preparing the connection

Note safety instructions

Always keep in mind the following safety instructions:

- Connect only in the complete absence of line voltage
- If overvoltage surges are expected, overvoltage arresters should be installed

Select power supply

Power can be supplied optionally via PLICSMOBILE B81 or a separate power supply unit.

When using a power supply unit, the secondary circuit must be separated from the primary circuit by double or reinforced insulation (according to the nationally valid safety standards).

The air and creeping distances in PLICSMOBILE T81 meet the requirements of EN IEC61010-1 for secondary circuits with reinforced insulation under overvoltage category III (altitude up to 2000 m).

Select connection cable

The voltage supply of PLICSMOBILE T81 is connected with standard cable according to the national installation standards.

The sensor connection cable included in the delivery is used to connect the sensor.

Cable screening and grounding

Connect the cable screen on the sensor side to ground potential. In the sensor, the screen must be connected directly to the internal ground terminal. The ground terminal on the outside of the sensor housing must be connected to the potential equalisation (low impedance).

Note:
When connecting more than one HART sensor, a different address must be assigned to each sensor (address range 1-15). Address 0 (mode 4 … 20 mA) may not be used. When assigning an address, only one sensor should be connected to PLICSMOBILE T81. If connection is already completed, the wiring must be briefly undone for addressing. Depending on the installation location of the sensors, it can be advantageous to carry out this addressing before installing and connecting the sensors. This can be conveniently carried out e.g. in the workshop. You only need a 24 Volt power supply as well as an indicating and adjustment module PLICSCOM or the adjustment software PACTware with VEGACONNECT.

5.2 Connection options

Power can be supplied to the sensor and PLICSMOBILE in two ways:

Common voltage supply for sensor and PLICSMOBILE

With this version, only one voltage supply is required for both devices. The voltage supply is connected to the PLICSMOBILE T81. In addition to the measured value, the sensor connection cable also carries the voltage supply of the sensor via HART. Hence there is no 4 … 20 mA HART signal from the sensor electronics available for processing, e.g. via a PLC. That's why the measured value transmis-

sion can only be carried out via radio transmission through e-mail/ SMS/VEGA Inventory System.

Separate voltage supply for sensor and PLICSMOBILE

With this version, the sensor and the PLICSMOBILE T81 are each powered via a separate power supply. Here, the measured values can be transmitted via radio communication and the 4 … 20 mA HART signal is available in parallel for processing, e.g. via a PLC.

HART communication
If the internal resistance of the connected power supply for the sensor is less than 230 Ω, the HART signal is extremely damped or short-circuited. Digital communication with PLICSCOM is then no longer possible. With low impedance processing systems, a resistance of approx. 230 Ω must be looped into the 4 … 20 mA cable. This resistance is already integrated in PLICSMOBILE T81 and can be looped automatically into the circuit by selecting the appropriate wires (see wiring plan).

The connection to power supply is carried out as described in the respective operating instructions manual.

5.3 Connection steps sensor connection cable

The sensor connection cable is used for transmission of the measured value from the sensor to the PLICSMOBILE T81. In addition, it can also transmit the voltage supply for the connected sensor.

The sensor connection cable is available in Ex version (blue) as well as in non-Ex version (black). It can be ordered in three lengths (5/10/25 m) and can be shortened afterwards to individual lengths. On one end there is a ready-for-use plug for connection to PLICSMOBILE T81. On the other end are free cable ends for direct connection to the sensor.

To connect, proceed as follows:

1. Connect the colour coded wire ends to the respective sensor terminals, as described in the wiring plan and the operating instructions of the sensor.
2. Isolate unused wires, depending on connection type and cable version
3. Connect the screen to the internal ground terminal, connect the outer ground terminal on the housing to potential equalisation
4. Tighten the compression nut of the cable entry gland. The seal ring must completely encircle the cable
5. Insert the plug of the sensor connection cable into the plug connection on PLICSMOBILE T81
6. Tighten plug connection

5.4 Connection steps voltage supply

Connection technology

The connection of the voltage supply is made via spring-loaded terminals in the electronics compartment. A small screwdriver is required to open the terminals. Solid as well as flexible cores without cable end sleeves can be used.

Connection procedure

Proceed as follows:

1. Unscrew the housing lid
2. Loosen compression nut of the cable gland and remove blind plug
3. Remove approx. 10 cm (4 in) of the cable mantle, strip approx. 1 cm (0.4 in) of insulation from the ends of the individual wires
4. Insert the cable into the cable gland through the cable entry

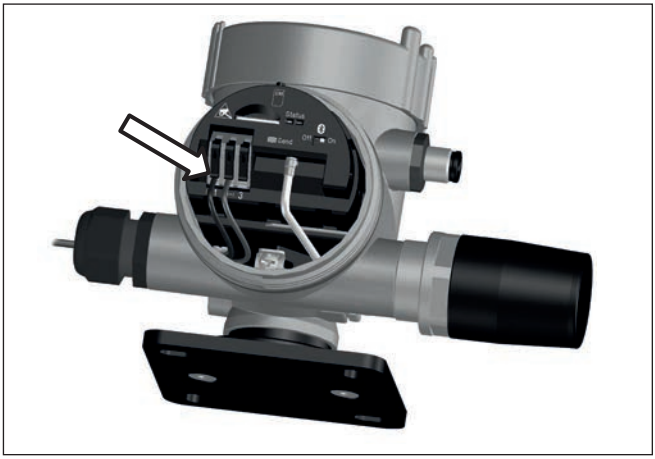

Fig. 5: Connection steps 4 and 5

5. Lift the opening levers of the terminals with a screwdriver
6. Insert the wire ends into the open terminals according to the wiring plan
7. Press down the opening levers of the terminals, you will hear the terminal spring closing
8. Check the hold of the wires in the terminals by lightly pulling on them
9. Connect the screen to the internal ground terminal, connect the external ground terminal to potential equalisation
10. Tighten the compression nut of the cable entry gland. The seal ring must completely encircle the cable
11. Screw the housing lid back on

The electrical connection is finished.

5.5 Wiring plan

Wiring plan with voltage supply of the sensor via PLICSMOBILE

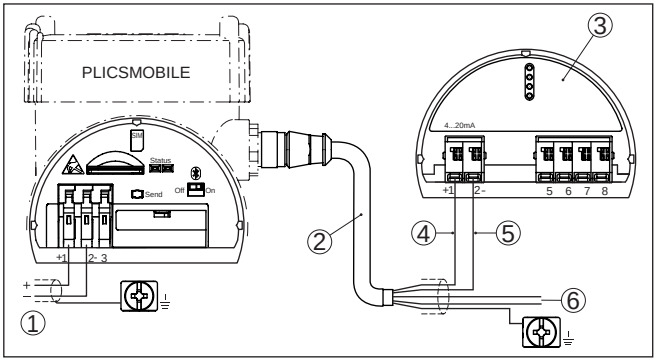

Fig. 6: Connection of the voltage supply in the electronics housing

1 *Power supply PLICSMOBILE and sensor*
2 *Sensor connection cable*
3 *HART sensor from the plics® series*
4 *Brown cable (+) for sensor power supply/HART communication*
5 *Blue cable (-) for sensor power supply/HART communication*
6 *Unused wires that must be insulated (not present on Ex version)*

Note:
If multiple sensors are connected, they are connected in parallel. The sensors should first be set to HART Multidrop mode

Wiring plan with external voltage supply of the sensor

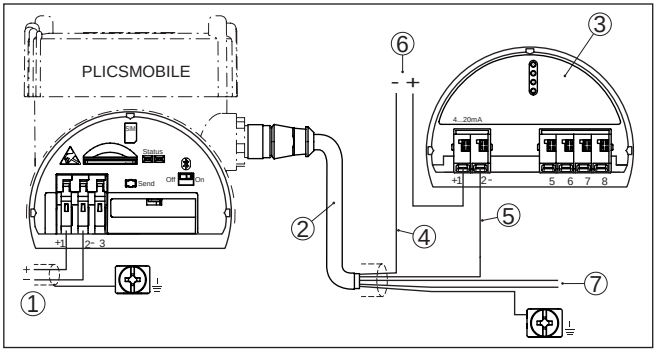

Fig. 7: Connection of the voltage supply in the electronics housing

1 *Power supply PLICSMOBILE*
2 *Sensor connection cable*
3 *HART sensor from the plics® series*
4 *Brown cable (+) for HART communication*
5 *Blue cable (-) with HART resistance, as an alternative white cable (-) without HART resistance*
6 *Voltage supply, sensor*
7 *Unused cores to be insulated*

Note:
The unused cores of the sensor connection cable must be insulated.

Wiring plan battery/solar panel

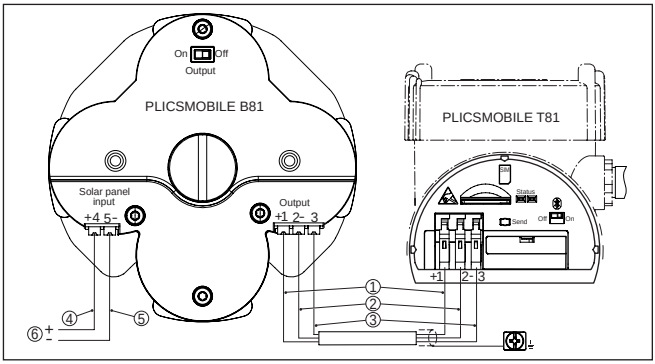

Fig. 8: Connection of the battery and the solar panel

1 *Brown cable (+) for sensor power supply*
2 *Blue cable (-) for sensor power supply*
3 *White cable for communication PLICSMOBILE T81 - B81*
4 *Brown cable (+) for accumulator charging via solar panel*
5 *Blue cable (-) for accumulator charging via solar panel*
6 *Power supply from the solar panel*

6 Battery operation and power saving mode

6.1 Battery/accumulator operation

If no mains voltage is available, PLICSMOBILE can be also powered with batteries. For this purpose, an optional power pack is available in a separate housing (PLICSMOBILE B81). This power pack can be either ordered or equipped with chargeable accumulators or Lithium batteries. As an alternative, an external battery/accumulator can be connected via the voltage supply terminals. You can find detailed information of the voltage supply in chapter "*Technical data*".

When battery/accumulator operation and time-controlled measurement transmission are activated, the power saving mode should be switched on and the Bluetooth function switched off to increase the operating time (details see chapter "*Power options*"). In addition, the HART Multidrop mode should be switched on.

Note:
For charging the accumulators the ambient temperature must be in a range of 0 … +45 °C (+32 … +113 °F). Temperatures outside this range are permitted, however due to the protective circuit integrated in the instrument, charging is not possible.

6.2 External battery PLICSMOBILE B81

The PLICSMOBILE B81 was especially developed for the power supply of PLICSMOBILE T81. It can be optionally equipped with rechargeable accumulators or non-rechargeable batteries of series "D" (Mono).

Note:
There is a safety instruction leaflet attached to each PLICSMOBILE B81 which must be read before setup and observed.

With the Ex version, one of the two following batteries/accumulators must be used. If other batteries/accumulators are used, the approval becomes invalid.

Battery operation

If there is no solar panel available at the installation location, then PLICSMOBILE B81 should be equipped with non-chargeable Li-batteries. As an alternative, standard Alkaline batteries can be used, the lifetime is hence shorter. We recommend using Lithium batteries LSH 20 of Messrs. Saft (VEGA order no. 2.54970). You can find further information of this battery type in the technical data.

Warning:
When using non-chargeable batteries, the terminals of the "*Solar Panel Input*" must not be connected. If voltage is applied, the batteries will be destroyed and there will be a fire hazard.

Accumulator operation

If a solar panel is used, PLICSMOBILE B81 must be equipped with rechargeable NiMH accumulators. The solar panel is connected directly to terminals 4 and 5, a charge regulator is integrated in the battery cover. We recommend the use of NiMH accumulators 5030641

from Ansmann (VEGA ordering no. 2.54971). You can find further information about this battery type in the technical data.

Note:
For charging the accumulators the temperature must be in a range of 0 … +45 °C (+32 … +113 °F). Temperatures outside this range are permitted, however due to the protective circuit integrated in the instrument, charging is not possible.

Connection

The battery cable joins PLICSMOBILE B81 with PLICSMOBILE T81. It is available with 5/10/25 m length. Connect the cable as shown in the wiring plan. Make sure that the terminals of both instruments are connected 1 : 1 via this cable.

Insert batteries

1. Make sure that the switch on the upper side of the cover is set to "OFF"
2. Unscrew the central fixing screw with a coin. Then you can remove the battery cover.
3. Insert the four batteries/accumulators into the battery compartment. The respective polarity is printed at the bottom of the compartment but also in the battery cover.
4. Place back the battery cover to the battery compartment. Make sure that the position is correct, the battery cover can only be attached in one direction.
5. Push the battery cover slightly downward on the points marked with "PUSH" and screw in the central fixing screw.
6. If all components are connected completely, you can set the switch on the upper side of the battery cover to "ON"

6.3 Solar panel PLICSMOBILE S81

Via the solar panel PLICSMOBILE S81 you can power the PLICSMOBILE T81, the accumulator pack will also be charged. Two solar panels with different size/capacity are available: with a sunny environment and max. one measured value transmission per day, the small 5 W module is sufficient; with intermittent shadowing and/or more than one measured value transmission per day, the larger 20 W module should be used. The technical data of both modules and the order information can be found in the supplement of this instruction manual.

Mounting

Orient the solar module in such a way that in sunless seasons its position is ideal to the sun and maximum efficiency is achieved. Because in these seasons, the sun is very low, a steep installation angle (approx. 60 - 75 degrees) is recommended so that the sunrays reach the module at right angles. A tube holder suitable for the module is available in the scope of delivery. The adjustment range of the inclination is 38 to 75 degrees, the orientation of the direction is individually possible due to the tube mounted. As an option also a holder for mounting on vertical surfaces such as walls is available.

Note:
The tube holder of the solar module is suitable for tube diameters of 30 … 60 mm (1.2 … 1.4 in). If the PLCSMOBILE should be mounted to the same tube, a tube with ø 60 mm is required.

Fasten the PLICSMOBILE close to the solar module to avoid unnecessary voltage loss on the cable.

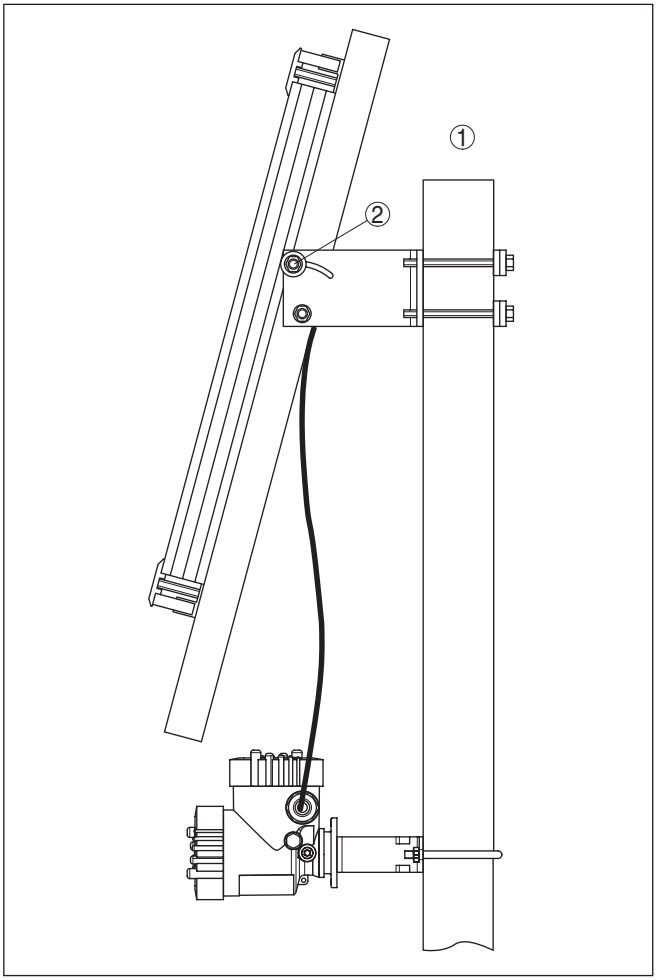

Fig. 9: Tube mounting PLICSMOBILE with solar module

1 Tube/mast with ø 60 mm (1.4 in)
2 Adjusting screw, inclination angle

Connection

The solar cable combines the power pack with the solar panel. It is available in the lengths 5/10/25 m. Connect the cable as shown in the wiring plan.

Note:
Make sure that the two cores of the connection cable are energized when the solar module is already connected and not covered. Avoid a short circuit during mounting and connection. Also pay attention to this when shortening the cable, if that should be necessary.

6.4 Battery sizing

When selecting an external battery/accumulator, the following points must be observed:

Power consumption in power saving mode:
If you use a battery or accumulator that cannot be automatically recharged cyclically, the power saving mode should be activated. With an operating voltage of e.g. 12 V, a standby power consumption of 0.4 mW must be taken into account. With an assumed lifetime of e.g. one year, the requirement is approximately 3.5 Wh, which corresponds to a battery capacity of 0.29 Ah at 12 V. The standby power consumption at specific operating voltages is stated in the "*Technical data*".

Power requirement for a complete measurement cycle incl. measured value transmission:
A measurement cycle lasts approximately 60 to 120 seconds (dependent on sensor type and network quality) and includes automatic switching on of the sensor (HART multidrop mode with 4 mA), recording of the measured value, measured value transmission and a return to the power saving mode. During this time, approximately 15 mWh of energy is required. For example, with one measurement per day, this adds up to approx. 7.3 Wh per year, which corresponds to a battery capacity of approx. 0.6 Ah at 12 V.

Examples for battery capacity depending on the number of transmission cycles

Number of messages/day	Annual consumption PLICSMOBILE		
	Standby energy demand	Energy demand for message transmission	Required battery capacitance with 12 V
1	3.5 Wh	7.3 Wh	0.6 Ah
2	3.5 Wh	14.6 Wh	1.5 Ah
4	3.5 Wh	29.2	2.7 Ah
8	3.5 Wh	58.4 Wh	5.1 Ah
24	3.5 Wh	175.2 Wh	14.9 Ah

Note:
Due to the nature of the system, each battery and accumulator has a self-discharge which can vary considerably dependent on the type. This is very important for the calculation of the required capacitance. In the listed examples, this self-discharge is not taken into accunt. The available capacitance depends also considerably from the temperature. The specifications refer to a temperature of 20 °C (68 °F).

Operating times with PLICSMOBILE B81

In the following table you can find exemplary the operating times when using PLICSMOBILE B81, depending on the number of sensors and messages per day as well as activated/deactivated Bluetooth function.

Number of messages	Number of sensors	Operating time of the battery in years	Operating time of the accumulator in years
1	1	>10/3.7*	3/0.7*
5		5.1/2.5*	0.9/0.5*
10		2.9/1.8*	0.3/0.3*
24		1.3/1.0*	0.2/0.2*
1	2	>10	2.8
5		4.6	0.9
10		2.6	0.5
24		1.1	0.2
1	5	>10	2.4
5		3.6	0.7
10		1.9	0.4
24		0.9	0.2

The values marked with * correspond to the operating time with activated Bluetooth module.

6.5 Power options

In the DTM (see chapter "*Parameter adjustment with PACTware*") you can select under the menu item "***Energy options***" between the modes "***Continuous operation***" and "***Power saving mode***".

Permanent operation

In continuous (non-stop) operation PLICSMOBILE and the sensor always remain switched on. Only in this mode can the instrument be used for level monitoring and send an e-mail when a certain level is reached or when an error occurs (measured value/status-controlled transmission). In continuous operation PLICSMOBILE allows remote parameter adjustment via the service department. Configuration changes on PLICSMOBILE as well as the sensor can thus be carried out remotely from any PC with PACTware via GPRS.

Power saving mode

In this mode, the integrated GSM modem as well as the sensor connected to PLICSMOBILE are switched on automatically when the time-controlled transmission of a message is pending. After the measured value is recorded, the log-in into the GSM network is carried out and the measured value is transmitted. The instrument then returns to power saving mode. The time for this process depends on the network quality and is generally approx. 70 seconds.

Note:
Please note that event-controlled transmission (measured value/ status-controlled) is not possible in the power saving mode. A dial-in connection for remote parameter adjustment is also not possible during the inactive time.

HART multidrop

When using battery operation and a HART sensor with non-required 4 … 20 mA signal, we recommend setting the sensor to multidrop mode. In such case, the sensor consumes constantly only 4 mA independently of the measured level, which increases the battery life considerably. When connecting one or more sensors, the HART multidrop mode is a basic requirement. A description of the activation of multidrop mode can be found in the operating instructions of the display and adjustment module.

Bluetooth

With activated Bluetooth function, additional energy is needed; this reduces the operating time with battery/accumulator operation considerably. For that reason, switch off the Bluetooth function if it is not being used (via the switch on the electronics module).

7 Setup

7.1 Adjustment system

Setup requirements

The dial-up to the configuration of PLICSMOBILE T81 is carried out via Bluetooth. For setup, a PC with PACTware and corresponding DTM is required. You also need the VEGA Bluetooth USB adapter; other Bluetooth modules, possibly already built into the PC or notebook, or other USB adapters cannot be used. As an alternative, the VEGA app for smartphones or tablets (iOS or Android) can be used. In such case you can use the Bluetooth module already integrated in the smartphone/tablet.

An activated SIM card (Mini-SIM) with data transmission option must be used in PLICSMOBILE T81. The GSM/GPRS network must have good coverage at the installation site.

Control elements on the device itself are limited to a test key and two LEDs. With these, operational readiness and the status of the instrument can be checked (connection to GSM network, standby …).

Display and adjustment elements

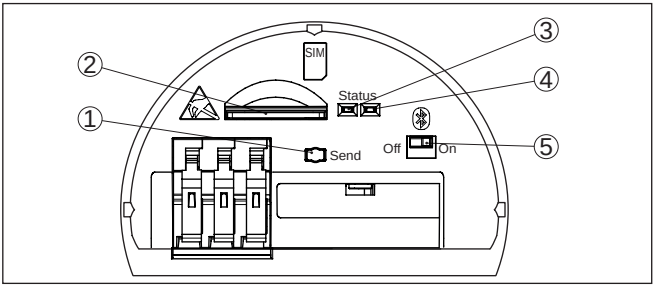

Fig. 10: Display and adjustment elements

1 *Key for testing operational readiness*
2 *SIM card slot (Mini-SIM format)*
3 *Status indication, mobile network (yellow)*
4 *Status indication, Bluetooth (blue)*
5 *Bluetooth switch*

Information:
The function description of the key and the status indication is available in chapter "*Mobile phone network and SIM card*".

7.2 Communication via Bluetooth

The parameter adjustment of PLICSMOBILE T81 is only carried out via the integrated Bluetooth interface. Thus a wireless connection to different operating devices is possible. These can be smartphones/tablets with iOS or Android operating system or PCs/notebooks with Windows operating system and Bluetooth USB adapter.

Bluetooth switch

There is a slide switch on the upper side of the electronics module for activating/deactivating the Bluetooth function. With switch position "On", connection can be established. After the parameter adjustment

it is generally recommended to set the switch to "Off". Less power is consumed this way and the lifetime of the battery is increased.

7.3 Parameter adjustment with PC and PACTware

Prerequisites

For adjustment via Windows PC, a Bluetooth USB adapter and the configuration software PACTware with the suitable instrument driver (DTM) according to FDT standard are required. The up-to-date PACTware version as well as all available DTMs are compiled in a DTM Collection. The DTMs can also be integrated in other frame applications according to FDT standard.

Note:
To ensure that all instrument functions are supported, you should always use the latest DTM Collection. Furthermore, not all described functions are included in older firmware versions. You can download the latest instrument software from our homepage. A description of the update procedure is also available in the Internet.

The basic operation of the software is described in the operating instructions manual "*DTM Collection/PACTware*" attached to each DTM Collection and which can also be downloaded from the Internet. Detailed descriptions are available in the online help of PACTware and the DTMs.

Standard/Full version

All device DTMs are available as a free-of-charge standard version and as a full version that must be purchased. In the standard version, all functions for complete setup are already included. An assistant for simple project configuration simplifies the adjustment considerably. Saving/printing the project as well as import/export functions are also part of the standard version.

In the full version there is also an extended print function for complete project documentation as well as a save function for measured value and echo curves. In addition, there is a tank calculation program as well as a multiviewer for display and analysis of the saved measured value and echo curves.

Bluetooth USB adapter

The VEGA Bluetooth USB adapter is required for communication with PLICSMOBILE T81. A Bluetooth module (possibly already installed in the PC or notebook) or a USB adapter from another manufacturer cannot be used. You can find further information in the instructions booklet of the Bluetooth USB adapter.

Connecting via Bluetooth

Make sure that the Bluetooth switch on the electronics module is set to "On" and the Bluetooth USB adapter is inserted.

Start the project assistant in PACTware; the Bluetooth USB adapter, the PLICSMOBILE T81 and the connected sensors should then be found and displayed in the project window.

Access protection

The protection against unauthorized access to the PLICSMOBILE T81 is set up on two steps. The first step is the Bluetooth access protection, controlling the general access to the instrument. After this step, reading out the parameters is always possible. Via the second

step, the parameter protection, the change of the instrument settings can be blocked.

Bluetooth access protection

With activated Bluetooth access, connection to the instrument is only possible if the respective Bluetooth access code is known. This numerical access code (6-digit) is stored in the instrument and can be read out and modified via DTM. In addition, the code is listed in the accompanying documents available in the scope of delivery. With activated Bluetooth access, the access code must be entered only once per adjustment tool because it is automatically stored with the first connection to the adjustment tool.

Information:
As a default setting, access protection is deactivated. To prevent from unauthorized change of the instrument data, the Bluetooth access protection and the following parameter protection should be activated. As an alternative, the Bluetooth function can be deactivated via the switch in the instrument.

Parameter protection

With parameter protection activated, the modification of device parameters is blocked. By entering a numerical device code (four to ten digits), the device is temporarily unlocked for a parameter change. After 60 minutes without any adjustments being made, the instrument is locked again automatically. Parameter protection is deactivated by default.

7.4 Mobile network and SIM card

An activated SIM card (Mini-SIM format) with data transmission option is required for setup.

Information:
The SIM card does not belong to the standard scope of delivery of the device. To avoid roaming costs, the card should be bought in the country in which the PLICSMOBILE T81 is installed and operated. If you are using a VEGA Ident Card, you don't have to worry about this because no roaming costs are charged.

VEGA-Ident-Card

To make the measured value transmission and remote maintenance as simple as possible, VEGA offers the service package "*Wireless data transmission*". This package includes an Ident Card (SIM card in Mini-SIM format) that covers all data transmission costs and provides worldwide 24-hour support.

Remote parameter adjustment

Incoming data connections (PLICSMOBILE) can only be established if the SIM card used supports GPRS. Incoming data connections are used for remote parameter adjustment via VEGA service.

Information:
When the power saving mode is activated in PLICSMOBILE, it cannot be contacted for remote parameter adjustment during the inactive time. During the active time (during a data transmission), incoming connections are accepted and maintained independent of the power saving mode until the connection is terminated.

Measured value transmission

Data connections outgoing from PLICSMOBILE are established via GPRS (volume-based billing). Outgoing connection are used for measured value transmission via e-mail/SMS/VEGA Inventory System.

During the transmission of the measured value via e-mail or Inventory System, approximately 5 KB data are transmitted. With hourly transmission, for example, this results in a monthly total net data volume of approximately 4 MB.

The mobile network provider carries out a so-called block rounding that depends on the selected tariff. When checking out of the GPRS network, the values are rounded to next higher billing units. Since PLICSMOBILE checks out of the GPRS network after the transmission of every message (if the energy saving mode is activated), this block rounding applies to each transmission. If, for example, a tariff with block rounding to 100 KB is used, an hourly measurement transmission results in a monthly billing volume of over 70 MB. For that reason, you should choose a pure data tariff plan (M2M) with the lowest possible block rounding.

Insert SIM card

Insert the card (beveled side in front) into the card slot until it snaps in. The contact surface must point upward.

Note:
The PLICSMOBILE T81 must be disconnected from voltage when inserting the SIM card. Keep ESD protection in mind when handling the SIM card. Electrostatic discharges can damage the SIM card or the PLICSMOBILE.

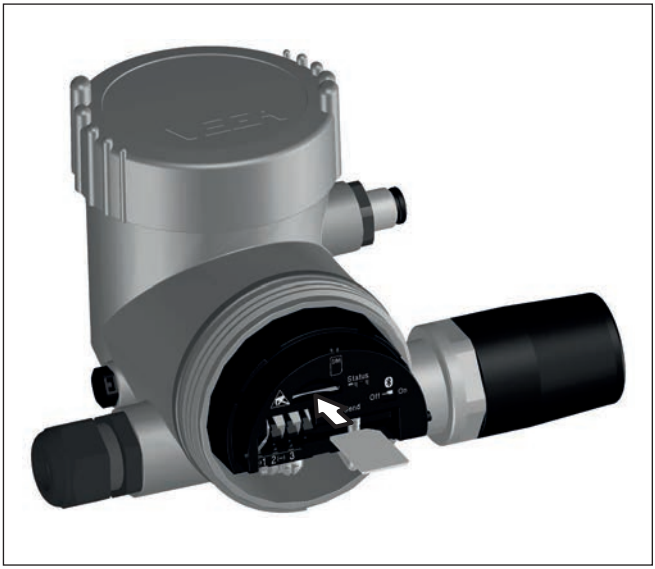

Fig. 11: Insert Mini-SIM card

55234-EN-170206

Activate SIM card

To avoid misuse, the SIM card is generally locked by a PIN. To ensure that PLICSMOBILE can contact these locked SIM cards, first of all the PIN must be entered. For this purpose the assistant "*Activate SIM card*" is available in the DTM. Enter here the correct PIN for the card. The assistant also offers the option of changing the PIN.

Information:
When using the VEGA Ident Card, entering or deactivating a PIN is not required.

Then check if the card is logged into the network and if sufficient network coverage (signal strength) exists. For a reliable measured value transmission, a signal strength of at least 30 % should be displayed. This can be checked in the DTM menu "*Network information*" under "*Setup - Diagnosis*". You can also see the general device status via the status indication.

Status indication

The following operating conditions are signalled via the yellow LED (mobile network status indication):

- **LED does not light:** no operating voltage or power saving mode active
- **Constant flashing:** Instrument is not logged into the GSM network
- **Unsteady flashing (long OFF/short ON):** instrument is booked into the GSM network
- **Continuous light:** Transmission or dial-up connection active
- **Quick steady flashing after continuous light** Measured value transmission failed

The following operating conditions are signalled via the blue LED (Bluetooth status indication):

- **LED does not light:** Bluetooth switched off or power saving mode active
- **Unsteady flashing (long OFF/short ON):** Bluetooth switched on
- **Permanent light:** Bluetooth connection is active

Information:
When the PLICSMOBILE T81 is in power saving mode, the LED status indicators are inactive. The LED indicators are active only during the time when a measurement with subsequent measured value transmission takes place.

"Send" button

By pushing this button, a manual measured value transmission will be triggered, independent of the configured time settings. This functions also if PLICSMOBILE is in power saving mode. Here you can check by means of the yellow status LED if logging into the GSM network is possible.

7.5 Internet connection and measured value transmission

Internet connection

The transmission of measured values via e-mail or to VEGA Inventory System is always based on an internet connection. For GPRS con-

nection, access data (user name/password) and the respective APN (Access Point Name) are required.

When using the VEGA service package "*Wireless data transmission*" and the VEGA Inventory System, you need no access data or additional information because the required parameters are already preset.

Information:
Further information and a list of current mobile network providers along with their access data can be found in the online help of the PLICSMOBILE DTM.

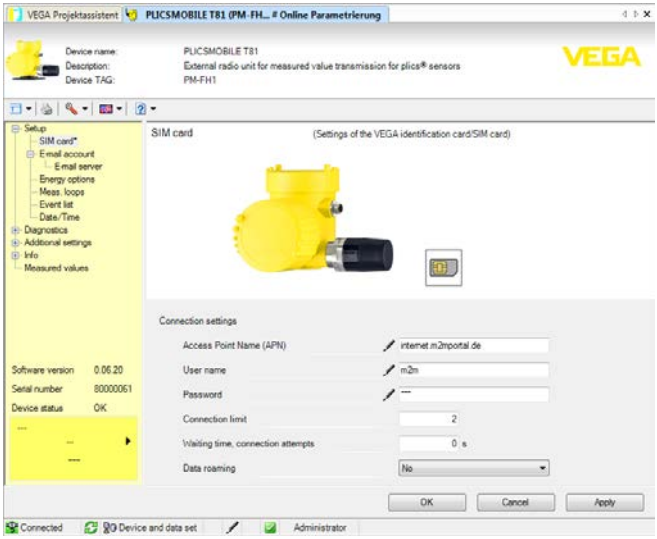

Fig. 12: Entering the Internet access data

Measured value transmission

The measured values can be transmitted optionally in the following ways:

- Via integrated mail client to any e-mail address
- Via SMS to any mobile phone
- Via http to the VEGA Inventory System

Under the DTM menu item "*Event list*" there is a convenient assistant for setting up measured value transmission. The measured values can be transmitted at individually definable times or intervals. A message can also be triggered when a certain level is exceeded or underrun. In addition, a status-controlled measured value transmission can be carried out, for example when a fault signal occurs.

E-mail transmission

For this option, an e-mail account with the names of the inbox and outbox servers (POP3/SMTP) as well as the user name/password are required for authentication. These data are available from your e-mail provider. For secure transmission, an encrypted connection via TLS is preset. Please note that for encrypted connections, other server

names must normally be used. You can find further information in the online help of the PLICSMOBILE DTM.

The measurement data can be sent either directly in the e-mail or in an attached file. The formats TXT, CSV, HTML or XML are available.

Note:
If you also want to send e-mails while using the Inventory System and a VEGA Ident Card, the following information is required in the connection settings:

- User name: "***m2m***"
- Password: "***sim***"
- APN: "***internet.m2mportal.de***"

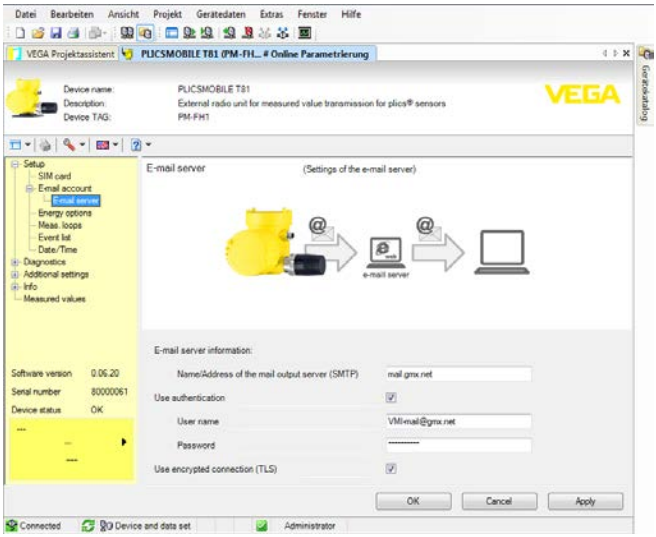

Fig. 13: Input of the e-mail access data

SMS transmission

For measured value transmission via SMS, no additional access data are required because all needed information is already available via the mobile phone contract.

VEGA Inventory System

For the configuration, only the URL or the IP address of the Inventory server are required. When hosting is carried out through VEGA, the server is contacted via the URL: "*data-vis.vega.com*". If Inventory System is hosted in your company, you will get the URL from your IT department.

8 Maintenance and fault rectification

8.1 Maintenance

If the device is used properly, no special maintenance is required in normal operation.

8.2 Rectify faults

Reaction when malfunction occurs

The operator of the system is responsible for taking suitable measures to rectify faults.

Causes of malfunction

Maximum reliability is ensured. Nevertheless, faults can occur during operation. These may be caused by the following, e.g.:

- Measured value from sensor not correct
- Voltage supply
- Interference in the cables

Fault rectification

The first measures to be taken are to check the input/output signal as well as to evaluate the error messages via the DTM. The procedure is described below. In many cases, the causes can be determined and the faults rectified in this way.

24 hour service hotline

Should these measures not be successful, please call in urgent cases the VEGA service hotline under the phone no. **+49 1805 858550**.

The hotline is manned 7 days a week round-the-clock. Since we offer this service worldwide, the support is only available in the English language. The service is free, only standard call charges are incurred.

Error messages

Error	Reason	Rectification
No indication of the signal strength	No GSM network available	Check network availability via mobile phone
E008	Sensor not found	Check connection of the sensor
E013	Sensor signals error, no valid measured value	Check sensor parameter adjustment Send sensor for repair
E030	Sensor in boot phase Measured value not valid	Check sensor parameter adjustment
E034	EEPROM CRC error	Switch the instrument off and on Carry out a reset Send instrument for repair
E035	ROM CRC error	Switch the instrument off and on Carry out a reset Send instrument for repair
E036	Instrument software not executable (during software update and after failed update)	Wait until software update is finished Carry out another software update

Error	Reason	Rectification
E042	Hardware error with self-check	Send instrument for repair
E053	Sensor measuring range is not read correctly	Communication error: Check sensor cable and screening
E086	Error communication hardware (initialisation of the radio module failed)	Initialisation is carried out automatically. If the error exists permanently, send instrument for repair

Reaction after fault rectification

Depending on the reason for the fault and the measures taken, the steps described in chapter "*Set up*" may have to be carried out again.

8.3 How to proceed if a repair is necessary

You can find an instrument return form as well as detailed information about the procedure in the download area of our homepage: www.vega.com.

By doing this you help us carry out the repair quickly and without having to call back for needed information.

If a repair is necessary, please proceed as follows:

- Print and fill out one form per instrument
- Clean the instrument and pack it damage-proof
- Attach the completed form and, if need be, also a safety data sheet outside on the packaging
- Please contact the agency serving you to get the address for the return shipment. You can find the agency on our home page www.vega.com.

Note:
If a battery-operated instrument is returned for repair, the battery/power pack must be removed. Please send only the instrument, not the battery/power pack.

9 Dismount

9.1 Dismounting steps

Take note of chapters "*Mounting*" and "*Connecting to power supply*" and carry out the listed steps in reverse order.

9.2 Disposal

The instrument consists of materials which can be recycled by specialised recycling companies. We use recyclable materials and have designed the electronics to be easily separable.

Materials: see chapter "*Technical data*"

For disposal or recycling within the European Union proceed according to the "*Electronics recycling*" and "*Battery/Accumulator recycling*" below. Outside the European Union you should take note of the valid national regulations.

Electronics recycling
This instrument is not subject to the WEEE directive 2002/96/EG and the respective national laws. Hence pass the instrument directly on to a specialised recycling company and do not use the municipal collecting points. These may be used only for privately used products according to the WEEE directive.

Battery/accumulator recycling

Note:
The disposal is subject to the directive 2006/66/EG on batteries and accumulators.

Batteries and accumulators contain some environmentally harmful but also some valuable raw materials that can be recycled. For that reason batteries and accumulators must not be disposed of in household waste.

All users are legally obligated to bring spent batteries to a suitable collection point, e.g. public collection points. You can also return the batteries and accumulators to us for correct disposal. Due to the very strict transport regulations for lithium-based batteries/accumulators, this is normally not a good idea because shipment is very expensive.

Correct disposal avoids negative effects on humans and the environment and ensures recycling of useful raw materials.

10 Supplement

10.1 Technical data

General data PLICSMOBILE T81	
Materials	
– Plastic housing	plastic PBT (Polyester)
– Aluminium die-cast housing	Aluminium die-casting AlSi10Mg, powder-coated - basis: Polyester
– Stainless steel housing	316L
– Cable gland	PA
– Sealing, cable gland	NBR
– Blind plug, cable gland	PA
– Seal between housing and housing lid	Silicone SI 850 R, NBR silicone-free
– Ground terminal	316L
Weight	
– Plastic housing	approx. 1.18 kg (2.59 lbs)
– Aluminium housing	approx. 1.65 kg (3.65 lbs)
– Stainless steel housing	approx. 3 kg (6.61 lbs)

Power supply PLICSMOBILE T81	
Operating voltage[1]	9.6 … 32 V DC
Power consumption[2]	
– Power saving mode (9 V/12 V)	0.18 mW/0.3 mW
– Power saving mode (24 V/32 V)	1.8 mW/3.7 mW
– Permanent operation	1.1 W
– Peak power (measured value transmission)	5.1 W
Power requirement[3]	
– Measurement cycle incl. transmission	15 mWh
Sensor power supply	
– Off-load voltage	34 V (31 V with Ex version)
– Max. current	80 mA (26 mA with Ex version)

PLICSMOBILE B81	
Materials	
– Aluminium housing	Aluminium die-casting
– Cable gland	PA
– Sealing, cable gland	NBR

1) When the instrument is powered by an external voltage supply, make sure the voltage supply unit has a sufficient current carrying capacity. With a voltage supply <9.6 V, current peaks of up to 2 A must be expected.
2) The listed power specifications include the voltage supply of a HART sensor with 20 mA.
3) The listed energy requirement includes the voltage supply of a HART sensor (VEGAPULS 61 with 4 mA (multidrop mode) and 12 V operating voltage.

– Blind plug, cable gland	PA
– Seal between housing and housing lid	Silicone SI 850 R, NBR silicone-free
– Ground terminal	316L
Weight	
– Aluminium housing	approx. 1.66 kg (3.66 lbs)
Approved battery types	Lithium battery or NiMH accumulator
Battery format	Type D (Mono)
Necessary power supply for charging NiMH accumulators	20 … 32 V DC

NiMH accumulator	
Accumulator type	4x NiMH series D (Mono)
Manufacturer	Ansmann
VEGA order code	2.54971
Capacitance	10 Ah
Nominal voltage	1.2 V DC
Ambient temperature (discharging)	-20… +60 °C (-4 … +140 °F)
Charging temperature	0 … +45 °C (+32 … +113 °F)[4]

Lithium battery	
Battery type	4x Lithium battery series D (Mono)
Manufacturer/Type	Saft LSH 20
VEGA order code	2.54970
Capacitance	13 Ah
Nominal voltage	3.6 V DC
Ambient temperature	-40… +85 °C (-40 … +185 °F)

PLICSMOBILE S81 (solar panel)	
Solar module 5 W	
– Nominal voltage	17.8 V DC
– max. open circuit voltage	22 V DC
– Nominal current	0.285 A
– max. shortcircuit current	0.315 A
– Dimensions	401 x 176 x 35 mm (15.8 x 6.9 x 1.3 in)
Solar module 20 W	
– Nominal voltage	17.8 V DC
– max. open circuit voltage	22 V DC
– Nominal current	1.14 A
– max. shortcircuit current	1.27 A
– Dimensions	662 x 299 x 35 mm (26.1 x 11.8 x 1.3 in)

[4] Due to a protective circuit, charging outside this temperature range is not possible

Connection cable	
– Length	5/10/25 m (196/393/ in)
– Wire cross-section	2 x 0.5 mm^2 (AWG 20)
– Material, cable cover	PVC

Sensor input	
Number of sensors	15 x HART sensors (5 x with Ex version)
Terminal voltage	
– Non-Ex version	approx. 14 V with 15 sensors (60 mA)
– Ex version	approx. 14 V with 5 sensors (20 mA)
Current limitation	approx. 80 mA (26 mA with Ex)

Mobile network	
SIM card slot	Mini-SIM (25 x 15 mm)
Radio frequency	UMTS Quad-Band GSM (850/900/1800/1900 MHz)
Antenna version	Isotropic (Omni) antenna

Bluetooth	
Bluetooth standard	Bluetooth Smart (Bluetooth LE)
Participants max.	1
Max. effective range	25 m (82.02 ft)

Indicators	
LED displays	
– Status, mobile network	1 x LED yellow
– Status, Bluetooth	1 x LED blue

Electromechanical data	
Cable entry/plug	
– Electronics housing	– 1 x cable gland M20 x 1.5 (cable ø 5 … 9 mm), 1 x plug for sensor connection
Spring-loaded terminals for wire cross-section	
– Massive wire, stranded wire	0.2 … 2.5 mm^2 (AWG 24 … 14)
– Stranded wire with end sleeve	0.2 … 1.5 mm^2 (AWG 24 … 16)
Sensor connection cable	
– Length	5/10/25 m

Ambient conditions	
Ambient temperature	-25 … +60 °C (-13 … +140 °F)
Storage and transport temperature	-25 … +80 °C (-13 … +176 °F)

Electrical protective measures	
Protection rating	IP 66[5)]

[5)] A suitable cable is required for maintaining the protection rating.

Overvoltage category (IEC 61010-1)	
– up to 2000 m (6562 ft) above sea level	II
– up to 5000 m (16404 ft) above sea level	II (only with connected overvoltage protection)
– up to 5000 m (16404 ft) above sea level	I
Protection rating (IEC 61010-1)	II

Measures for electrical separation

Reliable separation according to VDE 0106, Part 1, between power supply and input	
– Reference voltage	50 V
– Voltage resistance of the insulation	1.5 kV

Radio approvals

Radio approvals GSM modem	
– FCC ID	RI7GE865
– IC (Industry Canada)	5131 A-GE865
Radio approvals Bluetooth module	
– FCC ID	P144BL600
– IC (Industry Canada)	19318-BL600

Approvals

Instruments with approvals can have different technical specifications depending on the version.

For that reason the associated approval documents of these instruments have to be carefully noted. They are part of the delivery or can be downloaded under "www.vega.com" via "*VEGA Tools*" and "*Instrument search*" as well as via "*Downloads*" and "*Approvals*".

10.2 Dimensions

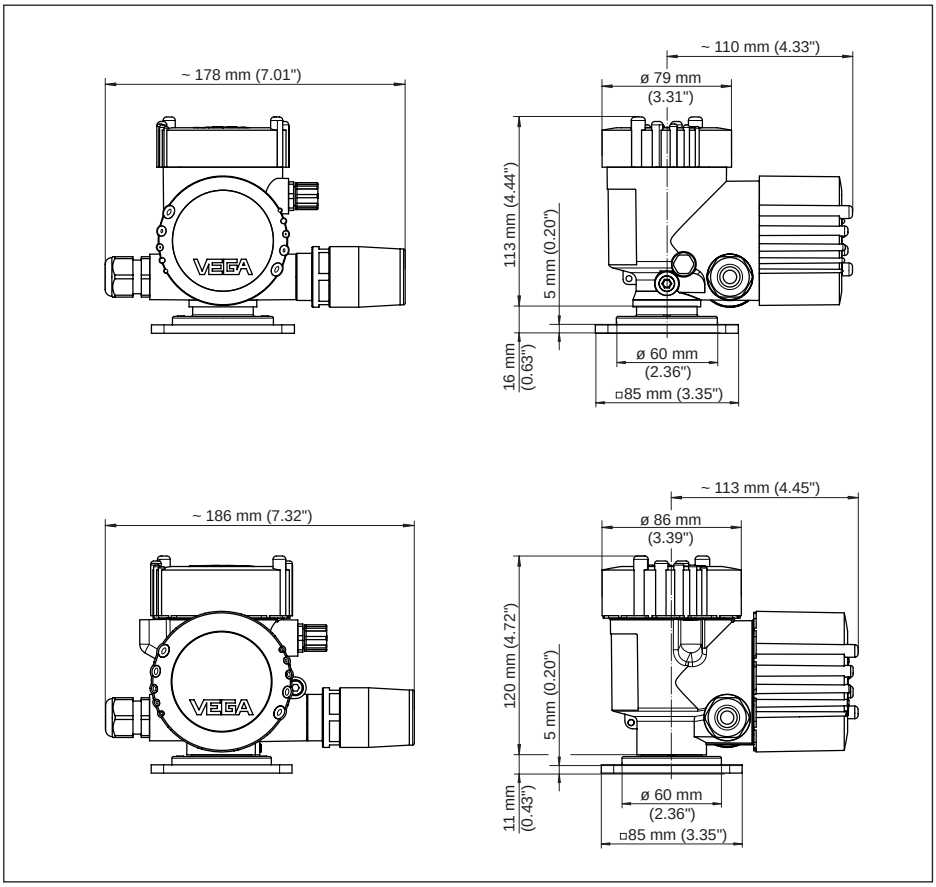

Fig. 14: Dimensions PLICSMOBILE T81 with plastic housing and StSt/Aluminium housing

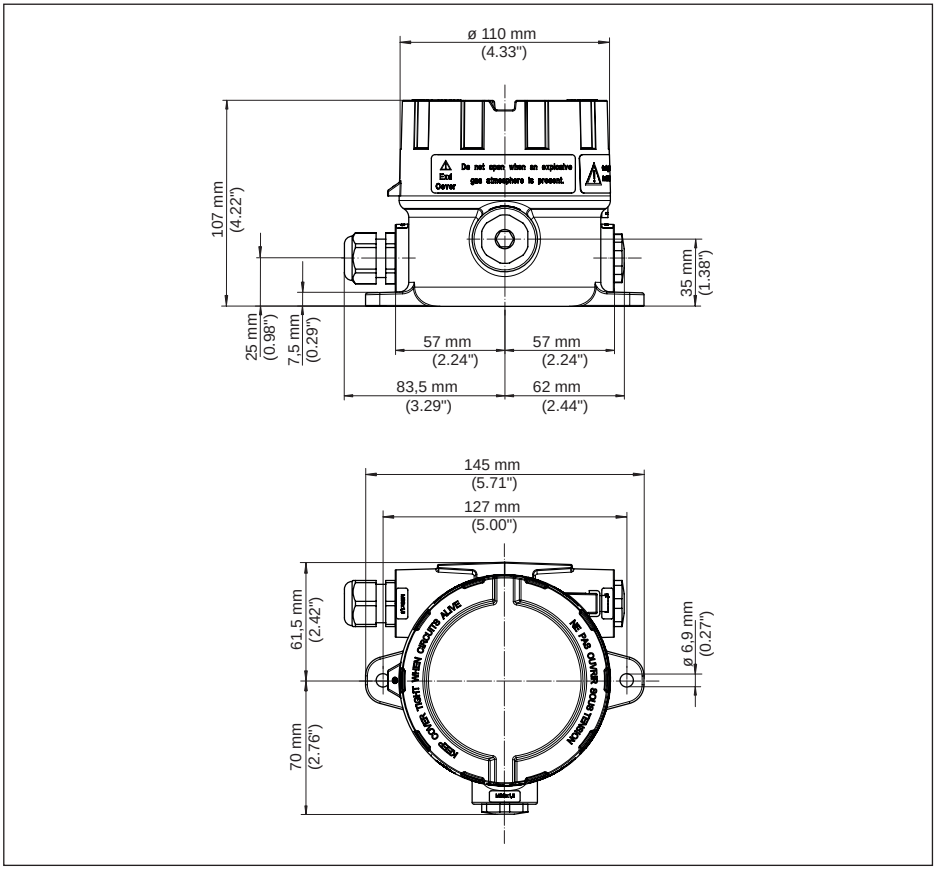

Fig. 15: Dimensions PLICSMOBILE B81 with Aluminium housing

55234-EN-170206

10.3 Industrial property rights

VEGA product lines are global protected by industrial property rights. Further information see www.vega.com.

VEGA Produktfamilien sind weltweit geschützt durch gewerbliche Schutzrechte.

Nähere Informationen unter www.vega.com.

Les lignes de produits VEGA sont globalement protégées par des droits de propriété intellectuelle. Pour plus d'informations, on pourra se référer au site www.vega.com.

VEGA lineas de productos están protegidas por los derechos en el campo de la propiedad industrial. Para mayor información revise la pagina web www.vega.com.

Линии продукции фирмы ВЕГА защищаются по всему миру правами на интеллектуальную собственность. Дальнейшую информацию смотрите на сайте www.vega.com.

VEGA系列产品在全球享有知识产权保护。

进一步信息请参见网站<www.vega.com。

10.4 Hash function acc. to mbed TLS

mbed TLS: Copyright (C) 2006-2015, ARM Limited, All Rights Reserved SPDX-License-Identifier: Apache-2.0

Licensed under the Apache License, Version 2.0 (the "License"); you may not use this file except in compliance with the License. You may obtain a copy of the License at http://www.apache.org/licenses/LICENSE-2.0.

Unless required by applicable law or agreed to in writing, software distributed under the License is distributed on an "AS IS" BASIS, WITHOUT WARRANTIES OR CONDITIONS OF ANY KIND, either express or implied. See the License for the specific language governing permissions and limitations under the License.

10.5 Trademark

All the brands as well as trade and company names used are property of their lawful proprietor/originator.

INDEX

A
Access data 29, 30
Access number 29
Accumulator 9, 19
Accumulator capacity 22
Adjustment 26
APN 29
Application area 9

B
Battery 9, 19
Battery capacity 22
Battery chamber 19
Bluetooth 24, 25
Bluetooth USB adapter 26

C
Cable
– Grounding 14
– Shielding 14
Carrier rail 12
Causes of malfunction 32
Connection procedure 16
Connection technology 15
CSD 27, 29

D
Data block rounding 28
Data matrix code 8
Dial-Out 27
Dial-up connection 27
Documentation 8
DTM 9, 25, 26
– DTM Collection 26
– Full version 26

E
E-mail 9, 30

F
Fault
– Rectification 32
FDT 26

G
GPRS 9, 27, 28, 29
GSM 9

H
HART 24

I
Instrument return form 33
Inventory System 30

L
LED displays 29
Lithium battery 19

M
M2M 28
Measured value transmission 19, 23, 29, 30
Moisture 11
Mounting 11
– Carrier rail mounting 12
– Tube 12
– Wall mounting 11
Mounting options 30
Multidrop 24
Multiviewer 26

N
Network coverage 29

O
Online help 26
Operating instructions 8
Orientation, solar module 20

P
PACTware 9, 25
PIN 29
Plug 15
Power options 23
Power saving function 9
Power saving mode 19, 22, 23, 27, 28, 29
Power supply unit 19

Q
Quadband 9

R
Remote parameter adjustment 9, 23, 27
Repair 33
Roaming 27, 28

S
Self-discharge 22
Sensor connection cable 15
Serial number 8
Service hotline 32

Signal strength 29
SIM card 27, 29
Smartphone-App 8
SMS 9
Software update 26
Solar module 20
Standby 22
Status indications 29

T

Tank calculation 26
Tube holder 20
Type label 8

V

VEGA Inventory System 9
Visualization 9
VMI 9
Voltage supply 9, 15

Printing date:

All statements concerning scope of delivery, application, practical use and operating conditions of the sensors and processing systems correspond to the information available at the time of printing.
Subject to change without prior notice

© VEGA Grieshaber KG, Schiltach/Germany 2017

55234-EN-170206

VEGA Grieshaber KG
Am Hohenstein 113
77761 Schiltach
Germany

Phone +49 7836 50-0
Fax +49 7836 50-201
E-mail: info.de@vega.com
www.vega.com