Operating Instructions

External radio unit for connection to HART sensors, optionally with battery housing/solar module

PLICSMOBILE LTE

Mobile network unit PLICSMOBILE T81

Battery housing PLICSMOBILE B81

Solar panel PLICSMOBILE S81

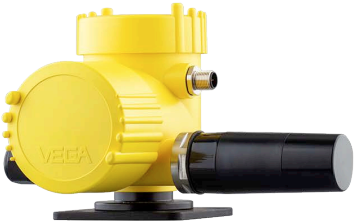

Document ID: 66083

Contents

1 About this document ... 4
1.1 Function ... 4
1.2 Target group ... 4
1.3 Symbols used ... 4

2 For your safety ... 5
2.1 Authorised personnel ... 5
2.2 Appropriate use ... 5
2.3 Warning about incorrect use ... 5
2.4 General safety instructions ... 5
2.5 EU conformity ... 6

3 Product description ... 7
3.1 Configuration ... 7
3.2 Principle of operation ... 8
3.3 Adjustment ... 9
3.4 Packaging, transport and storage ... 9

4 Mounting ... 10
4.1 General instructions ... 10
4.2 Installation procedure ... 11

5 Connecting to power supply ... 13
5.1 Preparing the connection ... 13
5.2 Connection options ... 13
5.3 HART communication ... 14
5.4 Connection steps sensor connection cable ... 14
5.5 Connection steps voltage supply ... 15
5.6 Wiring diagram PLICSMOBILE T81 with power supply ... 16
5.7 Wiring diagram PLICSMOBILE T81 with external power supply ... 19
5.8 Wiring plan PLICSMOBILE B81/S81 ... 21

6 Battery operation and power saving mode ... 22
6.1 Battery/accumulator operation ... 22
6.2 External battery PLICSMOBILE B81 ... 22
6.3 Solar panel PLICSMOBILE S81 ... 23
6.4 Battery - Sizing and operating time ... 25
6.5 Power options ... 26

7 Setup ... 28
7.1 Adjustment system ... 28
7.2 Communication via Bluetooth ... 28
7.3 Access protection ... 29
7.4 Parameter adjustment with PC and PACTware ... 30
7.5 Parameter adjustment with the VEGA Tools app ... 31
7.6 Mobile network and SIM card ... 33
7.7 Internet connection and measured value transmission ... 35

8 Diagnostics and servicing ... 38
8.1 Maintenance ... 38
8.2 Rectify faults ... 38
8.3 How to proceed if a repair is necessary ... 39

66083-EN-210527

9 Dismount ... 40
9.1 Dismounting steps ... 40
9.2 Disposal ... 40

10 Certificates and approvals ... 41
10.1 Radio license for Europe ... 41
10.2 Radio license for USA ... 41
10.3 Radio license for Canada ... 42
10.4 Installation and operation in the USA and Canada ... 42
10.5 Environment management system ... 42

11 Supplement ... 43
11.1 Technical data PLICSMOBILE T81 ... 43
11.2 Technical data PLICSMOBILE B81 ... 46
11.3 Technical data PLICSMOBILE S81 ... 48
11.4 Dimensions ... 48
11.5 Industrial property rights ... 51
11.6 Hash function acc. to mbed TLS ... 51
11.7 Trademark ... 51

66083-EN-210527

Editing status: 2021-05-12

1 About this document

1.1 Function

This instruction provides all the information you need for mounting, connection and setup as well as important instructions for maintenance, fault rectification, the exchange of parts and the safety of the user. Please read this information before putting the instrument into operation and keep this manual accessible in the immediate vicinity of the device.

1.2 Target group

This operating instructions manual is directed to trained personnel. The contents of this manual must be made available to the qualified personnel and implemented.

1.3 Symbols used

Document ID
This symbol on the front page of this instruction refers to the Document ID. By entering the Document ID on www.vega.com you will reach the document download.

Information, note, tip: This symbol indicates helpful additional information and tips for successful work.

Note: This symbol indicates notes to prevent failures, malfunctions, damage to devices or plants.

Caution: Non-observance of the information marked with this symbol may result in personal injury.

Warning: Non-observance of the information marked with this symbol may result in serious or fatal personal injury.

Danger: Non-observance of the information marked with this symbol results in serious or fatal personal injury.

Ex applications
This symbol indicates special instructions for Ex applications.

- **List**
  The dot set in front indicates a list with no implied sequence.

1 **Sequence of actions**
Numbers set in front indicate successive steps in a procedure.

Battery disposal
This symbol indicates special information about the disposal of batteries and accumulators.

66083-EN-210527

2 For your safety

2.1 Authorised personnel

All operations described in this documentation must be carried out only by trained, qualified personnel authorised by the plant operator.

During work on and with the device, the required personal protective equipment must always be worn.

2.2 Appropriate use

The PLICSMOBILE T81 is an external radio unit and is used for the transmission of measured values and for remote parameterization.

The PLICSMOBILE B81 is a battery housing for voltage supply of PLICSMOBILE T81.

The PLICSMOBILE S81 is a solar panel for charging the accumulators used in the PLICSMOBILE B81.

Operational reliability is ensured only if the instrument is properly used according to the specifications in the operating instructions manual as well as possible supplementary instructions.

2.3 Warning about incorrect use

Inappropriate or incorrect use of this product can give rise to application-specific hazards, e.g. vessel overfill through incorrect mounting or adjustment. Damage to property and persons or environmental contamination can result. Also, the protective characteristics of the instrument can be impaired.

2.4 General safety instructions

This is a state-of-the-art instrument complying with all prevailing regulations and directives. The instrument must only be operated in a technically flawless and reliable condition. The operator is responsible for the trouble-free operation of the instrument. When measuring aggressive or corrosive media that can cause a dangerous situation if the instrument malfunctions, the operator has to implement suitable measures to make sure the instrument is functioning properly.

During the entire duration of use, the user is obliged to determine the compliance of the necessary occupational safety measures with the current valid rules and regulations and also take note of new regulations.

The safety instructions in this operating instructions manual, the national installation standards as well as the valid safety regulations and accident prevention rules must be observed by the user.

For safety and warranty reasons, any invasive work on the device beyond that described in the operating instructions manual may be carried out only by personnel authorised by the manufacturer. Arbitrary conversions or modifications are explicitly forbidden. For safety reasons, only the accessory specified by the manufacturer must be used.

To avoid any danger, the safety approval markings and safety tips on the device must also be observed.

2.5 EU conformity

The device fulfils the legal requirements of the applicable EU directives. By affixing the CE marking, we confirm the conformity of the instrument with these directives.

The EU conformity declaration can be found on our homepage.

3 Product description

3.1 Configuration

Scope of delivery

The scope of delivery encompasses:

- Mobile network unit PLICSMOBILE T81
  - Information sheet " *PINs and Codes*" mit Bluetooth access code
  - Information sheet " *Access protection*" with Bluetooth and emergency access code
  - VEGA identification card (SIM card) (optional)
  - Sensor connection cable (optional)
  - Remote antenna with 3 m cable extension (optional)
- Battery housing PLICSMOBILE B81 (optional)
  - Connection cable, field device (optional)
  - Connection cable, solar panel (optional)
  - Batteries or accumulators (optional)
- Solar module PLICSMOBILE S81 (optional)
  - Holder for mast mounting
- Documentation
  - This operating instructions manual
  - Documentation of the access and unlock codes
  - If necessary, further certificates

Constituent parts

The PLICSMOBILE T81 consists of the components:

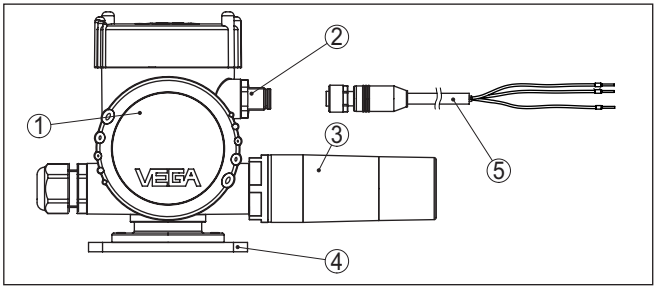

Fig. 1: PLICSMOBILE T81

1 Electronics compartment
2 Plug connector (M12) for connection of the HART sensors
3 Multi-functional antenna (mobile network/Bluetooth/GPS)
4 Mounting plate
5 Sensor connection cable

Type label

The type label contains the most important data for identification and use of the instrument:

- Instrument type
- Information about approvals
- Technical data
- Serial number of the instrument
- QR code for device documentation

- Number code for Bluetooth access
- Manufacturer information

Documents and software

Move to " www.vega.com" and enter in the search field the serial number of your instrument.

There you can find the following information about the instrument:

- Order data
- Documentation
- Software

Alternatively, you can find all via your smartphone:

- Scan the QR-code on the type label of the device or
- Enter serial number manually in the VEGA Tools app (available free of charge in the respective stores)

3.2 Principle of operation

Application area

The PLICSMOBILE T81 is a mobile network unit for transmission of measured values and for remote parameter adjustment of HART sensors, especially of plics® sensors. Due to the large operating voltage range and the integrated power saving functions, a mains-independent power supply via battery or accumulator/solar cells is possible, for example through PLICSMOBILE B81. Typical applications are measured value transmission from mobile vessels, battery-operated level measurement and deep well measurement.

The measured value and message transmission can be optionally carried out via e-mail or SMS. Furthermore, the measured values can be transmitted via https for visualisation in " *VEGA Inventory System*". The use of PLICSMOBILE T81 is particularly suitable for inventory management, VMI (Vendor Managed Inventory) and remote enquiry.

Functional principle

The external mobile network unit PLICSMOBILE T81 can be connected to any 4 … 20 mA HART two-wire sensor of the plics® series. In HART Multidrop operation up to 15 sensors can be connected to a PLICSMOBILE T81.

The transmission of measured values, event messages and diagnostic information to the user is carried out via the GSM/GPRS/UMTS/LTE network. Thank multi band technology, the device can be used virtually anywhere in the world. There is also the option of accessing the connected sensor via remote parameter adjustment.

The combined radio antenna enables the GSM/GPRS/UMTS/LTE communication as well as the Bluetooth connection. In addition, the antenna enables the reception of position data via GPS.

Voltage supply

Power is supplied via a standard low voltage source (external power supply unit/battery/accumulator/solar panel) or via the optionally available PLICSMOBILE B81. You can find detailed specifications on the power supply in chapter " *Connecting to power supply*" as well as in " *Technical data*".

3.3 Adjustment

The device is adjusted via a PC with PACTware and the corresponding DTM or via smartphone/tablet with the VEGA Tools app. The connection is made via the Bluetooth interface integrated in PLICSMOBILE T81.

3.4 Packaging, transport and storage

Packaging

Your instrument was protected by packaging during transport. Its capacity to handle normal loads during transport is assured by a test based on ISO 4180.

The packaging of standard instruments consists of environment-friendly, recyclable cardboard. For special versions, PE foam or PE foil is also used. Dispose of the packaging material via specialised recycling companies.

Transport

Transport must be carried out in due consideration of the notes on the transport packaging. Nonobservance of these instructions can cause damage to the device.

Transport inspection

The delivery must be checked for completeness and possible transit damage immediately at receipt. Ascertained transit damage or concealed defects must be appropriately dealt with.

Storage

Up to the time of installation, the packages must be left closed and stored according to the orientation and storage markings on the outside.

Unless otherwise indicated, the packages must be stored only under the following conditions:

- Not in the open
- Dry and dust free
- Not exposed to corrosive media
- Protected against solar radiation
- Avoiding mechanical shock and vibration

Storage and transport temperature

- Storage and transport temperature see chapter " *Supplement - Technical data - Ambient conditions*"
- Relative humidity 20 … 85 %

4 Mounting

4.1 General instructions

Mounting options

In the standard version, the PLICSMOBILE T81 is designed for wall mounting. Mounting adapters for carrier rail mounting (top hat rail 35 x 7.5 according to DIN EN 50022/60715) as well as for tube mounting are optionally available.

Ambient conditions

The instrument is suitable for standard and extended ambient conditions acc. to DIN/EN/IEC/ANSI/ISA/UL/CSA 61010-1. It can be used indoors as well as outdoors.

Make sure that the environmental and ambient conditions specified in chapter " *Technical data*" are maintained.

Installation position

Check before mounting if a sufficient network coverage (signal strength) of the mobile network provider is available at the planned location. This can be simply tested by means of a mobile phone. Keep in mind that the SIM cards in the PLICSMOBILE T81 and in the mobile phone are from the same mobile phone provider or work in the same mobile phone network. The PLICSMOBILE T81 supports the mobile phone standards 2G (GSM) and 3G (UMTS) and 4G (LTE). The mobile phone standard 5G (LTE) however is not supported. Therefore for this test of the network coverage, the 5G standard in the mobile phone should be temporarily switched off.

If the radio reception is too weak, you should search for a better position. In closed rooms this would be, for example, close to a window or at least closer to an outer wall. In addition, an antenna extension with magnetic base is available which can be placed up to 2.9 m away from the instrument.

Caution:
During operation, a distance of at least 20 cm should be kept between the antenna and persons working nearby. Operation of the instrument with smaller distances is not recommended.

Protection against moisture

Protect your instrument against moisture ingress through the following measures:

- Use the recommended connection cable (see chapter " *Connecting to power supply*")
- Tighten the cable gland
- When mounting horizontally, turn the housing so that the cable gland points downward
- Loop the connection cable downward in front of the cable gland

This applies mainly to outdoor installations, in areas where high humidity is expected (e.g. through cleaning processes) and on cooled or heated vessels.

To maintain the housing protection, make sure that the housing lid is closed during operation and locked, if necessary.

Make sure that the degree of contamination specified in chapter " *Technical data*" meets the existing ambient conditions.

4.2 Installation procedure

Wall mounting

The PLICSMOBILE T81 for wall mounting is supplied with a mounting base for screw mounting.

→ Fasten the instrument with four appropriate screws (not included in the delivery) according to the following illustration.

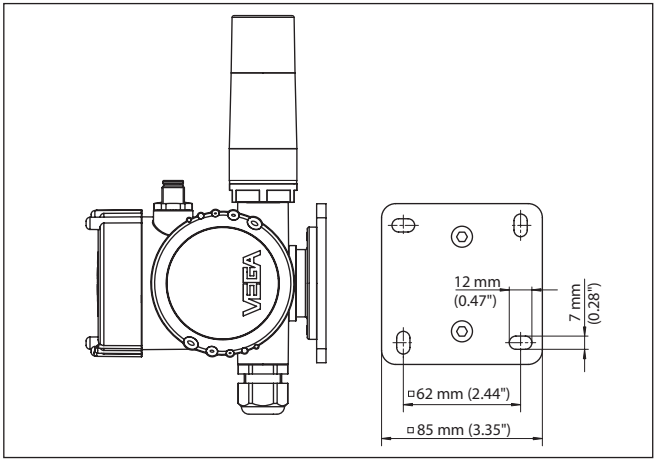

Fig. 2: PLICSMOBILE T81 for wall mounting, bottom view of mounting plate.

Carrier rail mounting

The PLICSMOBILE T81 for carrier rail mounting is supplied with an already assembled adapter for fastening on a 35 x 7.5 carrier rail.

→ Snap the instrument without tools onto the carrier rail. Loosening from the carrier rail is also carried out without tools. Through the integrated spring, you just have to apply slight lateral pressure to the instrument.

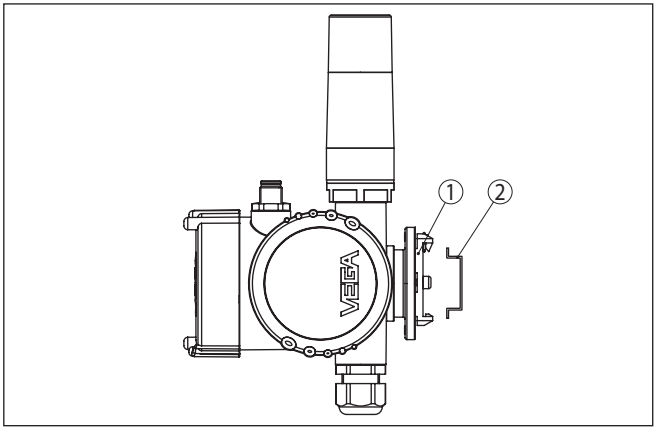

Fig. 3: PLICSMOBILE T81 for carrier rail mounting

1 Adapter plate
2 Carrier rail

Tube mounting

The PLICSMOBILE T81 for tube mounting is supplied with a measuring instrument holder and four hexagon socket screws M5 x 12 as unassembled mounting accessory.

→ Mount the measuring instrument holder according to the following illustration to the socket of PLICSMOBILE T81. Then you can fasten the instrument with the bent strap to your tube.

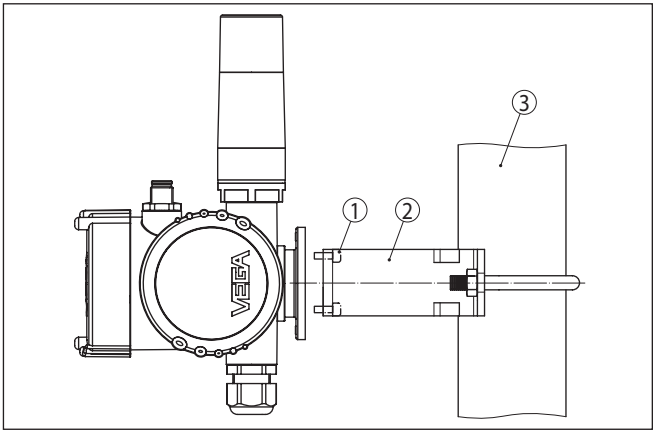

Fig. 4: PLICSMOBILE T81 for tube mounting

1 4 screws M5 x 12
2 Measuring instrument holder
3 Tube

5 Connecting to power supply

5.1 Preparing the connection

Safety instructions

Always keep in mind the following safety instructions:

- The electrical connection must only be carried out by trained, qualified personnel authorised by the plant operator.
- If overvoltage surges are expected, overvoltage arresters should be installed.

Warning:
Connect only in the complete absence of line voltage.

Voltage supply

Power can be supplied optionally via PLICSMOBILE B81 or a separate power supply unit.

When using a power supply unit, the secondary circuit must be separated from the primary circuit by double or reinforced insulation (according to the nationally valid safety standards).

The air and creeping distances in PLICSMOBILE T81 meet the requirements of EN IEC 61010-1 for secondary circuits with reinforced insulation under overvoltage category III (altitude up to 2000 m).

Connection cable

The voltage supply of PLICSMOBILE T81 is connected with standard cable according to the national installation standards.

If electromagnetic interference is expected which is above the test values of EN 61326-1 for industrial areas, shielded cable should be used.

Make sure that the cable used has the required temperature resistance and fire safety for max. occurring ambient temperature

We generally recommend the use of shielded cable for HART multidrop mode.

Use cable with round cross section for instruments with housing and cable gland. Use a cable gland suitable for the cable diameter to ensure the seal effect of the cable gland (IP protection rating).

Cable screening and grounding

Connect the cable screen on the sensor side to ground potential. In the sensor, the screen must be connected directly to the internal ground terminal. The ground terminal on the outside of the sensor housing must be connected to the potential equalisation (low impedance).

5.2 Connection options

Power can be supplied to the sensors and PLICSMOBILE in two ways:

Common voltage supply of the sensors and PLICSMOBILE

This version requires only one power supply for all devices. Up to 15 HART sensors can be connected to the PLICSMOBILE T81. The power supply is connected to the PLICSMOBILE T81. In addition to the measured value, the sensor connection cable also transmits the power supply to all sensors via HART.

Separate voltage supply for sensor and PLICSMOBILE

With this version, the PLICSMOBILE T81 and a 4 … 20 mA/HART sensors are each powered via a separate power supply. Here, the measured values can be transmitted via radio communication and the 4 … 20 mA HART signal of the sensor is available in parallel for processing, e.g. via a PLC.

5.3 HART communication

HART resistor with common power supply

If the sensors are connected to PLICSMOBILE, HART communication is ensured and no additional HART resistor must be looped.

HART resistor with separate power supply

If the internal resistance of the connected power supply for the sensor is less than 230 Ω, the HART signal is extremely damped or short-circuited. Digital communication with PLICSCOM is then no longer possible. With low impedance processing systems, a resistance of approx. 230 Ω must be looped into the 4 … 20 mA/HART cable. This resistance is already integrated in PLICSMOBILE T81 and can be looped automatically into the circuit by selecting the appropriate wires (see wiring plans with or without HART resistor).

The connection to power supply is carried out as described in the respective operating instructions manual.

HART address

Note:
When connecting more than one HART sensor, a different address must be assigned to each sensor (address range 1-15). Address 0 (mode 4 … 20 mA) may not be used. When assigning an address, only one sensor should be connected to PLICSMOBILE T81. If connection is already completed, the wiring must be briefly undone for addressing. Depending on the installation location of the sensors, it can be advantageous to carry out this addressing before installing and connecting the sensors. This can be conveniently carried out e.g. in the workshop. You only need a 24 Volt power supply as well as an indicating and adjustment module PLICSCOM or the adjustment software PACTware with VEGACONNECT.

HART master mode

The HART protocol enables the connection of up to two masters on the same line (Primary/Secondary Master). The PLICSMOBILE T81 works as Primary Master in the factory setting. If another master is to be connected, e.g. for parameterization of the sensor, it must work as a Secondary Master. If this is not possible, the PLICSMOBILE T81 can alternatively be reconfigured as a Secondary Master.

5.4 Connection steps sensor connection cable

The sensor connection cable is used for transmission of the measured value from the sensors to the PLICSMOBILE T81. In addition, it can also transmit the voltage supply for all connected sensors.

The sensor connection cable can be ordered in three lengths (5/10/25 m) and can also be shortened individually at a later date. On one side there is a ready-made plug for connection to the PLICSMOBILE T81. On the other side are free cable ends for direct connection to the sensor.

To connect, proceed as follows:

1. Connect the colour coded wire ends to the respective sensor terminals, as described in the wiring plan and the operating instructions of the sensor.
2. Isolate unused wires, depending on connection type and cable version
3. Connect the shielding to the internal ground terminal, connect the external ground terminal to the housing with potential equalisation
4. Tighten the compression nut of the cable entry gland. The seal ring must completely encircle the cable
5. Insert the plug of the sensor connection cable into the plug connection on PLICSMOBILE T81
6. Tighten plug connection

5.5 Connection steps voltage supply

Connection technology

The connection of the voltage supply is made via spring-loaded terminals. A small screwdriver is required to open the terminals. Solid as well as flexible cores without cable end sleeves can be used.

Connection procedure

Proceed as follows:

1. Unscrew the housing lid
2. Loosen compression nut of the cable gland and remove blind plug
3. Remove approx. 10 cm (4 in) of the cable mantle, strip approx. 1 cm (0.4 in) of insulation from the ends of the individual wires
4. Insert the cable into the cable gland through the cable entry

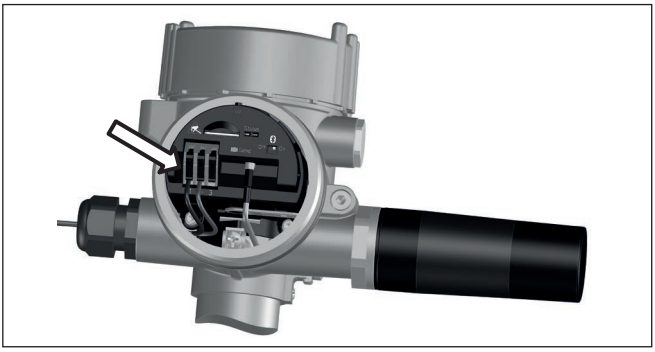

Fig. 5: Connection steps 4 and 5

5. Lift the opening levers of the terminals with a screwdriver
6. Insert the wire ends into the open terminals according to the wiring plan
7. Press down the opening levers of the terminals, you will hear the terminal spring closing
8. Check the hold of the wires in the terminals by lightly pulling on them

9. Connect the shielding to the internal ground terminal, connect the external ground terminal to potential equalisation
10. Tighten the compression nut of the cable entry gland. The seal ring must completely encircle the cable
11. Screw the housing lid back on

The electrical connection is finished.

5.6 Wiring diagram PLICSMOBILE T81 with power supply

Connection plics® sensor

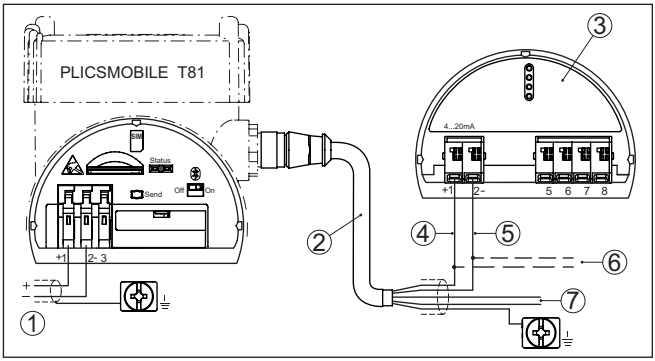

Fig. 6: Connection voltage supply and plics® sensor

1 *Power supply PLICSMOBILE T81 and connected sensors*
2 *Sensor connection cable*
3 *HART sensor from the plics® series*
4 *Brown cable (+) for sensor power supply/HART communication*
5 *Blue cable (-) for sensor power supply/HART communication*
6 *Connection of additional HART sensors*
7 *Unused wires that must be insulated (not present on Ex version)*

Note:
If multiple sensors are connected, they are connected in parallel. The sensors must first be set to HART Multidrop mode with individual HART addresses and " *fix current (4 mA)*"

Connection of sensor via VEGABOX 03

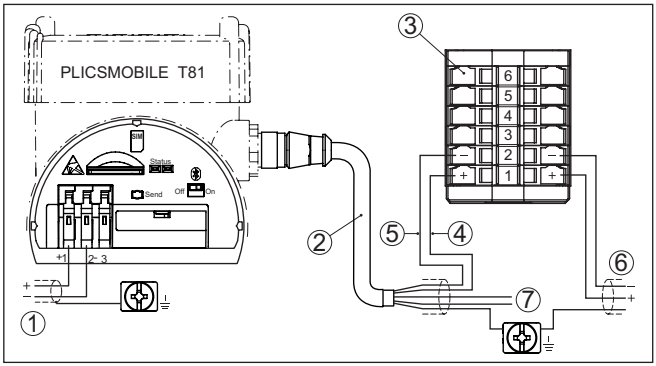

Fig. 7: Connection of the voltage supply and VEGABOX 03

1 *Power supply PLICSMOBILE T81 and connected sensors*
2 *Sensor connection cable*
3 *Connection terminal VEGABOX 03*
4 *Brown cable (+) for sensor power supply/HART communication*
5 *Blue cable (-) for sensor power supply/HART communication*
6 *To the HART sensors*
7 *Unused wires that must be insulated (not present on Ex version)*

Note:
If multiple sensors are connected, they are connected in parallel. The sensors must first be set to HART Multidrop mode with individual HART addresses and " *fix current (4 mA)*"

Connection of sensor via VEGADIS 82 HART

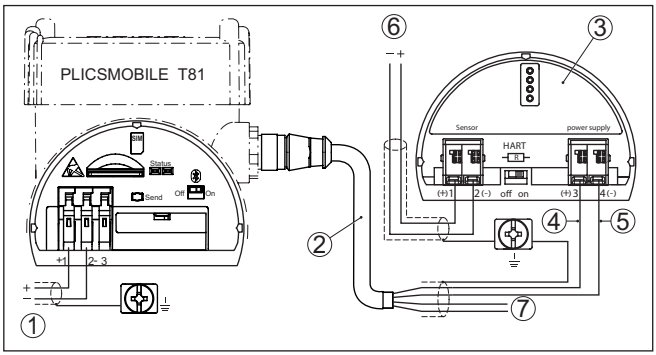

Fig. 8: Connection of the voltage supply and VEGADIS 82 HART

1 *Power supply PLICSMOBILE T81 and connected sensors*
2 *Sensor connection cable*
3 *VEGADIS 82 in HART version*
4 *Brown cable (+) for sensor power supply/HART communication*
5 *Blue cable (-) for sensor power supply/HART communication*
6 *To the HART sensors*
7 *Unused wires that must be insulated (not present on Ex version)*

Note:
If multiple sensors are connected, they are connected in parallel. The sensors must first be set to HART Multidrop mode with individual HART addresses and " *fix current (4 mA)*"

Connection assignment, sensor connection cable

If you want to assemble the optionally available sensor connection cable by yourself, you can find here the connection assignment. A 5-pole M12 cable connector with A coding is used as plug connection. The max. cable length is 500 m.

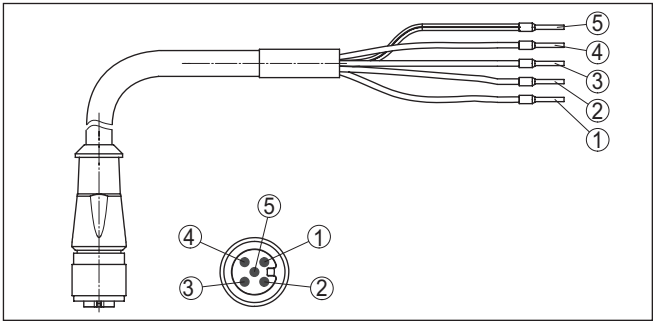

Fig. 9: Connection assignment, sensor connection cable

1 *Brown cable*
2 *White cable*
3 *Blue cable*
4 *Black cable*
5 *Cable screen (grey)*

5.7 Wiring diagram PLICSMOBILE T81 with external power supply

Connection plics®-Sensor with HART resistor

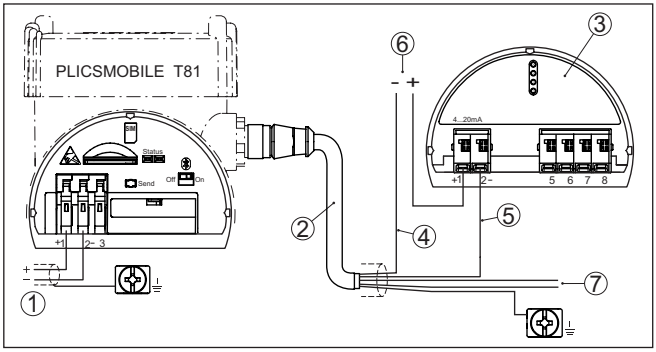

Fig. 10: Connection of the voltage supply

1 *Power supply PLICSMOBILE*
2 *Sensor connection cable*
3 *HART sensor from the plics® series*
4 *Black cable*
5 *Blue cable*
6 *Voltage supply, sensor (e.g. PLC)*
7 *Unused cores to be insulated*

Note:
The unused cores of the sensor connection cable must be insulated.

Information:
When connecting a 4 … 20 mA/HART sensors, a VEGADIS 82 can be looped optionally into the circuit for measured value indication.

Connection plics®-Sensor without HART resistor

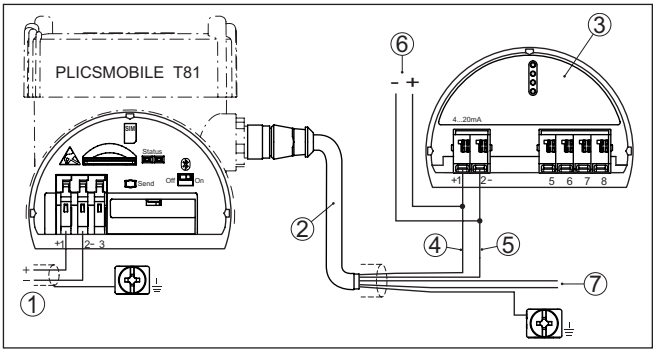

Fig. 11: Connection of the voltage supply

1 *Power supply PLICSMOBILE*
2 *Sensor connection cable*
3 *HART sensor from the plics® series*
4 *White cable*
5 *Black cable*
6 *Voltage supply, sensor (e.g. PLC)*
7 *Unused cores to be insulated*

Note:
The unused cores of the sensor connection cable must be insulated.

Information:
When connecting a 4 … 20 mA/HART sensors, a VEGADIS 82 can be looped optionally into the circuit for measured value indication.

5.8 Wiring plan PLICSMOBILE B81/S81

Connection PLICSMOBILE B81/S81

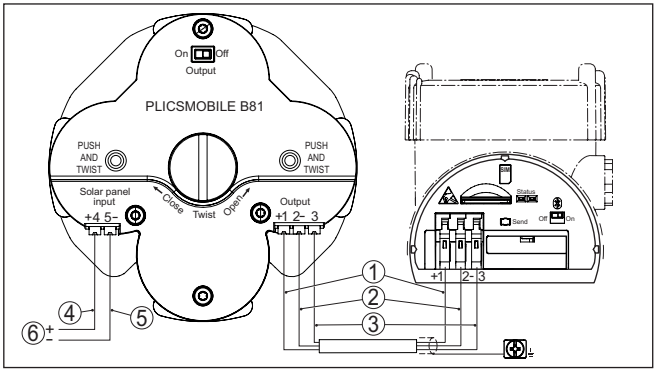

Fig. 12: Connection of PLICSMOBILE B81/S81

1. *Brown cable (+) for sensor power supply*
2. *Blue cable (-) for sensor power supply*
3. *White cable for communication PLICSMOBILE T81 - B81*
4. *Brown cable (+) for accumulator charging via solar panel*
5. *Blue cable (-) for accumulator charging via solar panel*
6. *Power supply from the solar panel*

6 Battery operation and power saving mode

6.1 Battery/accumulator operation

If no mains voltage is available, PLICSMOBILE T81 can be also powered with batteries. For this purpose, we recommend using PLICSMOBILE B81. This battery housing can be either ordered or equipped with chargeable accumulators or not rechargeable Lithium batteries. As an alternative, an external battery/accumulator can be connected via the voltage supply terminals. You can find detailed information of the voltage supply in chapter " *Technical data*".

When battery/accumulator operation and time-controlled measurement transmission are activated, the power saving mode should be switched on and the Bluetooth function switched off to increase the operating time (details see chapter " *Power options*"). In addition, the HART Multidrop mode should be switched on in the sensor.

6.2 External battery PLICSMOBILE B81

The PLICSMOBILE B81 was especially developed for the power supply of PLICSMOBILE T81. It can be optionally equipped with rechargeable accumulators or non-rechargeable batteries of series "D" (Mono).

Caution:
There is a safety instruction leaflet attached to each PLICSMOBILE B81 which must be read before setup and observed.

Battery operation

If there is no solar panel available at the installation location, then PLICSMOBILE B81 should be equipped with non-chargeable Lithium batteries. As an alternative, standard Alkaline batteries can be used, the lifetime is hence shorter. We recommend using Lithium batteries LSH 20 of Messrs. Saft which are available in many standard online shops. You can find further information in chapter " *Technical data*".

Warning:
When using non-chargeable batteries, the terminals of the " *Solar Panel Input*" must not be connected. If voltage is applied, the batteries will be destroyed and there will be a fire hazard.

Accumulator operation

If a solar panel is used, PLICSMOBILE B81 must be equipped with rechargeable NiMH accumulators. The solar panel is connected directly to terminals 4 and 5, a charge regulator is integrated in the battery cover of PLICSMOBILE B81. We recommend the use of NiMH accumulators 5030641 from Ansmann which are available in many standard online shops. You can find further information of this battery type in chapter " *Technical data*".

Note:
For charging the accumulators the temperature must be in a range of 0 … +45 °C (+32 … +113 °F). Temperatures outside this range are permitted, however due to the protective circuit integrated in PLICSMOBILE B81, charging is not possible.

Connection

The battery cable joins PLICSMOBILE B81 with PLICSMOBILE T81. It is available with 5/10/25 m length. Connect the cable as shown in the wiring plan. Make sure that the terminals of both instruments are connected 1 : 1 via this cable.

Insert batteries

1. Make sure that the switch on the upper side of the cover is set to "OFF"
2. Unscrew the central fixing screw, e.g. with a coin. Then you can remove the battery cover.
3. Insert the four batteries/accumulators into the battery compartment. The respective polarity is printed at the bottom of the compartment but also in the battery cover.
4. Place back the battery cover to the battery compartment. Make sure that the position is correct, the battery cover can only be attached in one direction.
5. Push the battery cover slightly downward on the points marked with "PUSH" and screw in the central fixing screw.
6. If all components are connected completely, you can set the switch on the upper side of the battery cover to "ON".
7. When using non-rechargeable batteries, their capacity should be specified so that the remaining time can be displayed correctly. Select the menu item " *Energy options - Battery change*" in the DTM or the VEGA Tools app.

6.3 Solar panel PLICSMOBILE S81

Via the solar module PLICSMOBILE S81, the accumulators of PLICSMOBILE B81 can be charged and the PLICSMOBILE T81 powered with energy. You can find the technical data of the solar module and the ordering information in the annex of this manual.

Mounting

The module holder with pipe clamp is shipped completely assembled. Two module terminals with fixing screws and slot nuts for fixing the solar module are part of the scope of delivery.

Note:
The tube holder of the solar module is suitable for tube diameters of 30 … 60 mm (1.2 … 1.4 in). If the PLICSMOBILE B81 or PLICSMOBILE T81 should be mounted to the same tube, a tube with ø 60 mm is required.

Fasten the PLICSMOBILE B81 close to the solar module to avoid unnecessary voltage loss on the cable.

Installation procedure

1. Mount the solar module by means of the module terminals to the module holder as shown in the following illustration.
2. Mount the complete solar unit by means of the mast holder to the respective mast.
3. If necessary, mount the PLICSMOBILE T81 and the PLICSMOBILE B81 also to the same mast, as shown in the following illustration.

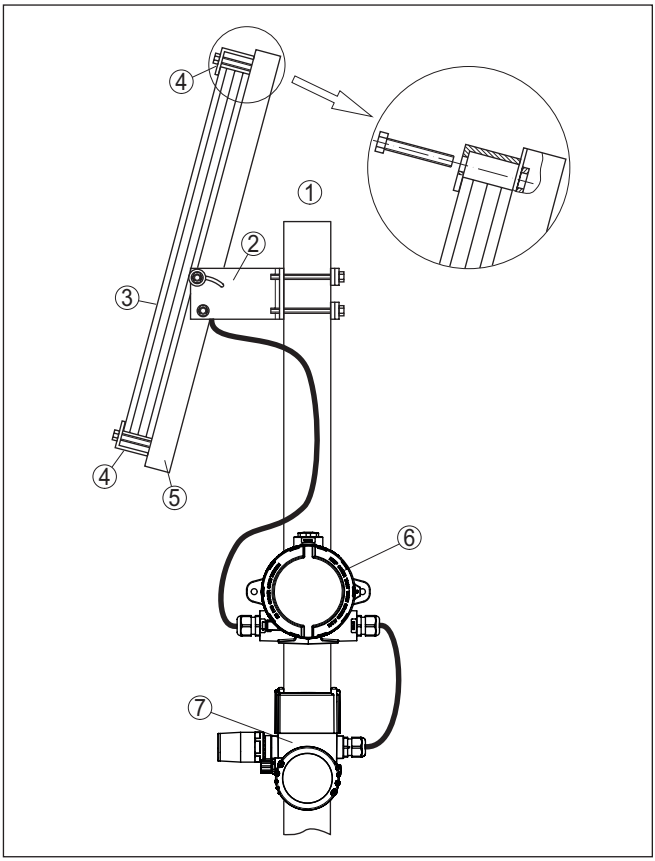

Fig. 13: Tube mounting PLICSMOBILE with solar module

1 *Tube/mast with ø 60 mm (1.4 in)*
2 *Mast holder with adjusting screws for inclination angle*
3 *PLICSMOBILE S81 (solar panel)*
4 *Module terminal with fixing screw and slot nut*
5 *Module holder*
6 *PLICSMOBILE B81 (battery/accumulator housing)*
7 *PLICSMOBILE T81*

Orientation

Orient the solar module in such a way that in sunless seasons its position is ideal to the sun and maximum efficiency is achieved. Because in these seasons, the sun is very low, a steep installation angle (approx. 60 - 75 degrees) is recommended so that the sunrays reach the module at right angles. The adjustment range of the inclination is 38 to 75 degrees, the orientation of the direction is individually possible due to the tube mounted.

Connection

The solar cable combines PLICSMOBILE B81 with the solar panel PLICSMOBILE S81. It is available in the lengths 5/10/25 m. Connect the cable as shown in the wiring plan.

Caution:
Make sure that the two cores of the connection cable are energized when the solar module is already connected and not covered. Avoid a short circuit during mounting and connection. Also pay attention to this when shortening the cable, if that should be necessary.

6.4 Battery - Sizing and operating time

When selecting an external battery/accumulator, the following points must be observed:

Power consumption in power saving mode:
If you use a battery or accumulator that cannot be automatically recharged cyclically, the power saving mode should be activated. With an operating voltage of e.g. 12 V, a standby power consumption of 0.4 mW must be taken into account. With an assumed lifetime of e.g. one year, the requirement is approximately 3.5 Wh, which corresponds to a battery capacity of 0.29 Ah at 12 V. The standby power consumption at specific operating voltages is stated in the " *Technical data*".

Power requirement for a complete measurement cycle incl. measured value transmission:
A measurement cycle lasts approximately 60 to 120 seconds (dependent on sensor type and network quality) and includes automatic switching on of the sensor (HART multidrop mode with 4 mA), recording of the measured value, measured value transmission and a return to the power saving mode. During this time, approximately 15 mWh of energy is required. For example, with one measurement per day, this adds up to approx. 7.3 Wh per year, which corresponds to a battery capacity of approx. 0.6 Ah at 12 V.

Examples for battery capacity depending on the number of transmission cycles

Quantity Messages/Days	Annual consumption PLICSMOBILE		
	Standby energy demand	Energy demand for message transmission	Required battery capacitance with 12 V
1	3.5 Wh	7.3 Wh	0.6 Ah
2	3.5 Wh	14.6 Wh	1.5 Ah
4	3.5 Wh	29.2 Wh	2.7 Ah
8	3.5 Wh	58.4 Wh	5.1 Ah
24	3.5 Wh	175.2 Wh	14.9 Ah

Tab. 1: The specifications refer to the connection of a sensor

Note:
Due to the nature of the system, each battery and accumulator has a self-discharge which can vary considerably dependent on the type. This is very important for the calculation of the required capacitance. In the listed examples, this self-discharge is not taken into accunt. The available capacitance depends also considerably from the temperature. The specifications refer to a temperature of 20 °C (68 °F).

Operating times with PLICSMOBILE B81
In the following table you can find exemplary the operating times when using PLICSMOBILE B81, depending on the number of sensors and messages per day as well as activated/deactivated Bluetooth function.

Quantity		Operating time in years	
Messages	**Sensors**	**Battery**	**Accumulator**
1	1	5.6/2.7*	1.5/0.6*
5		4.0/2.3*	0.9/0.5*
10		3.0/1.9*	0.6/0.4*
24		1.7/1.3*	0.3/0.3*
1	2	5.1	1.3
5		3.8	0.9
10		2.8	0.6
24		1.7	0.3
1	5	4.1	1.0
5		1.7	0.3
10		1.0	0.2
24		0.4	0.1

The values marked with * correspond to the operating time with activated Bluetooth interface.

6.5 Power options

In the DTM of PLICSMOBILE T81 (see chapter " *Parameter adjustment with PACTware"*) you can select under the menu item " ***Energy options***" between the modes " ***Continuous operation***" and " ***Power saving mode***".

Permanent operation

In continuous (non-stop) operation PLICSMOBILE T81 and the sensors always remain switched on. Only in this mode can the instrument be used for level monitoring and send an e-mail when a certain level is reached or when an error occurs (measured value/status-controlled transmission). In continuous operation PLICSMOBILE T81 allows remote parameter adjustment via the service department. Configura-

tion changes on PLICSMOBILE T81 as well as the sensor can thus be carried out remotely from any PC with PACTware via GPRS.

Power saving mode

In this mode, the integrated radio module as well as the sensors connected to PLICSMOBILE T81 are switched on automatically when the time-controlled transmission of a message is pending. After the measured value is recorded, the log-in into the mobile network is carried out and the measured value is transmitted. The instrument then returns to power saving mode. The time for the complete process depends on the connected sensors as well as the network quality and is generally approx. 70 seconds.

Note:
Keep in mind that an event-controlled transmission (measured value/ event-controlled) is not possible in the power saving mode. A dial-up connection for parameter adjustment is also not possible during the inactive time. A maintenance slot can be configured via the VEGA Inventory System in which the PLICSMOBILE T81 pauses the power saving mode for a definable time. During this time, the PLICSMOBILE T81 can be reached via dial-up connection for remote maintenance.

Continuous operation/ power saving mode (combined)

In this mode, PLICSMOBILE automatically decides whether to operate in continuous mode or in power-saving mode. As long as the accumulators of a connected PLICSMOBILE B81 are charged via a power source, the PLICSMOBILE operates continuously. If the accumulators in the connected PLICSMOBILE B81 are not charged, PLICSMOBILE operates in power-saving mode.

Combined operation is particularly interesting for applications with solar power supply. During the day, the accumulators are charged, during which time PLICSMOBILE operates continuously and can react quickly to changes in measured values. At night, however, PLICSMOBILE works in power-saving mode.

Another possible application are mobile containers such as cement or plaster silos. A power supply is available during filling and emptying on site. This charges the accumulators and the PLICSMOBILE operates continuously. If, on the other hand, the silo is being transported or is on standby, there is usually no power supply available/required and PLICSMOBILE operates in power-saving mode.

Bluetooth

With activated Bluetooth function, additional energy is needed; this reduces the operating time with battery/accumulator operation considerably. For that reason, switch off the Bluetooth function if it is not being used (via the switch on the electronics module).

HART multidrop

When using battery operation and a HART sensor with non-required 4 … 20 mA signal, we recommend setting the sensor to multidrop mode. In such case, the sensor consumes constantly only 4 mA independently of the measured level, which increases the battery life considerably. When connecting one or more sensors, the HART multidrop mode is a basic requirement. Here an individual HART address must be assigned to each connected sensor.

7 Setup

7.1 Adjustment system

Setup requirements

The connection for configuring the PLICSMOBILE T81 is established via Bluetooth. A PC with PACTware and corresponding DTM is required for commissioning. In addition, the Bluetooth 5.0 interface is required. Alternatively, the VEGA Tools app for smartphones or tablets (iOS or Android) can be used.

An activated SIM card (Mini-SIM) with data transmission option must be used in PLICSMOBILE T81. The mobile network must have good coverage at the installation site.

Control elements on the device itself are limited to a test key and two LEDs. With these, operational readiness and the status of the instrument can be checked (connection to GSM network, standby …).

Display and adjustment elements

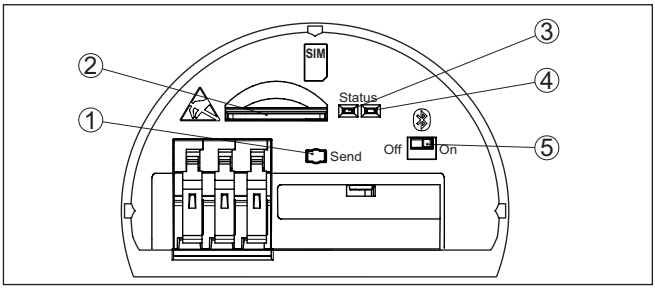

Fig. 14: Display and adjustment elements

1 *Key for testing operational readiness*
2 *SIM card slot (Mini-SIM format)*
3 *Status indication, mobile network (yellow)*
4 *Status indication, Bluetooth (blue)*
5 *Bluetooth switch*

Information:
The function description of the key and the status indication is available in chapter " *Mobile phone network and SIM card*".

7.2 Communication via Bluetooth

The parameter adjustment of PLICSMOBILE T81 is only carried out via the integrated Bluetooth interface. Thus a wireless connection to different operating devices is possible. These can be smartphones/tablets with iOS or Android operating system or PCs/notebooks with Windows operating system and Bluetooth USB adapter.

Bluetooth switch

There is a slide switch on the upper side of the electronics module for activating/deactivating the Bluetooth function. With switch position "On", connection can be established. After the parameter adjustment it is generally recommended to set the switch to "Off" (battery mode). Less power is consumed this way and the lifetime of the battery is considerably increased.

7.3 Access protection

The protection against unauthorized access to the PLICSMOBILE T81 is set up on two steps. The first step is controlling the general access to the instrument via Bluetooth or the network. After this step, reading out the parameters is always possible. The second step is controlling the access to parameters, here the change of the instrument settings can be blocked.

Bluetooth access

With protected Bluetooth access, connection to the PLICSMOBILE T81 is only possible if the respective *"Bluetooth access code"* is known. This individual numerical access code (6-digit) is stored in the instrument and printed on the type label. In addition, the code is listed in the accompanying documents available in the scope of delivery. The access code must be entered only once per adjustment tool because it is automatically stored with the first connection to the adjustment tool. The Bluetooth access code can be read out and modified during connection via DTM.

Note:
If an incorrect Bluetooth access code is entered (3 failed attempts), the code can only be entered again after a delay time. This time gets longer after each incorrect entry.

Network access (remote maintenance)

The PLICSMOBILE T81 can be configured and maintained remotely via the network access. This requires a static IP address for the SIM card used.

Network access is deactivated at the factory and must be activated in the DTM or the app under Network access is deactivated at the factory and must be activated in the DTM or the app under " *Additional settings - Access protection - Network - Allow remote maintenance*" if required. Please note that this activation can only be carried out in the immediate vicinity of the PLICSMOBILE T81 via Bluetooth. Without this activation, no remote access is possible. Alternatively, the activation can already be ordered during the ordering process. In this way, network access is already active when the device is delivered.

With protected network access, connection to the PLICSMOBILE T81 is only possible if the respective *"Network access code"* is known. This individual alphanumerical access code (20-digit PSK) is stored in the instrument and listed in the accompanying documents available in the scope of delivery. The access code must be entered only once per adjustment tool because it is automatically stored with the first connection to the adjustment tool. The network access code can be read out and modified during connection via DTM.

Note:
By activating remote maintenance, you agree that a VEGA employee may access PLICSMOBILE and all connected sensors. He therefore has full authorization to read out all parameters and measured values and, if necessary, to save or change them. If you do not agree with this, you must not activate remote maintenance.

Access protection, parameterization

With parameter protection activated, the modification of device parameters is blocked. By entering a numerical device code (four digits), the device is temporarily unlocked for a parameter change. After 60 minutes without any adjustments being made, the instrument is locked again automatically. Parameter protection is deactivated by default.

Unlock codes

The accompanying documents contain additional unlock codes apart from the access codes. If one of the access codes is no longer known, you can get access to the instrument via the respective emergency unlock code and assign a new access code.

Note:
Make sure the access and emergency unlock codes are kept in a safe place.

7.4 Parameter adjustment with PC and PACTware

Prerequisites

For adjustment via Windows PC, a Bluetooth interface and the configuration software PACTware with the suitable instrument driver (DTM) according to FDT standard are required. The up-to-date PACTware version as well as all available DTMs are compiled in a DTM Collection. The DTMs can also be integrated in other frame applications according to FDT standard.

Note:
To ensure that all instrument functions are supported, you should always use the latest DTM Collection. Furthermore, not all described functions are included in older firmware versions. You can download the latest instrument software from our homepage. A description of the update procedure is also available in the Internet.

The basic operation of the software is described in the operating instructions manual " *DTM Collection/PACTware*" attached to each DTM Collection and which can also be downloaded from the Internet. Detailed descriptions are available in the online help of PACTware and the DTMs.

Standard/Full version

All device DTMs are available as a free-of-charge standard version and as a full version that must be purchased. In the standard version, all functions for complete setup are already included. An assistant for simple project configuration simplifies the adjustment considerably. Saving/printing the project as well as import/export functions are also part of the standard version.

In the full version there is also an extended print function for complete project documentation as well as a save function for parameters, measured value and echo curves. In addition, there is a tank calculation program as well as a VEGA DataViewer for display and analysis of the saved measured value and echo curves.

Bluetooth interface

A Bluetooth 5.0 interface is required for communication with the PLICSMOBILE T81. Older systems can be retrofitted with a Bluetooth 5.0 USB adapter.

Connecting via Bluetooth

Make sure that the Bluetooth switch on the electronics module of PLICSMOBILE T81 is set to "On" and the Bluetooth USB adapter is inserted on the PC.

Start the project assistant in PACTware; the Bluetooth interface, the PLICSMOBILE T81 and the connected sensors should then be found and displayed in the project window.

Authenticate

For the first connection, the DTM and PLICSMOBILE must authenticate each other. For this purpose, the Bluetooth access code stored in PLICSMOBILE must be entered in the DTM. You can find further information in chapter " *Access protection*".

Now carry out the parameter adjustment of PLICSMOBILE or the sensor via the respective adjustment menu.

7.5 Parameter adjustment with the VEGA Tools app

System requirements

Make sure that your smartphone/tablet meets the following system requirements:

- Operating system: Apple iOS 8 or newer
- Operating system: Android 5.1 or newer
- Bluetooth Smart 4.0 oder neuer

Download the app "VEGA Tools" from the Apple App Store, Google Play Store or Baidu App Store to your smartphone or tablet.

Activate Bluetooth

Make sure that the Bluetooth function on the upper side of the electronics module is activated.

Connecting

Start the " *VEGA Tools*" app and select the function " *Setup*" in the main menu. The smartphone/tablet searches automatically for all Bluetooth-capable instruments in the area.

All instruments found are listed in the adjustment window, the search is automatically continued. Select the requested PLICSMOBILE T81 in the instrument list to start connection.

Authenticate

For the first connection, the app and PLICSMOBILE T81 must authenticate each other. For this purpose, the Bluetooth access code stored in PLICSMOBILE T81 must be entered in the app. You can find further information in chapter " *Access protection*". A coupling request must be confirmed with Apple device after entering the Bluetooth access code.

Parameter adjustment

After the authentication, the selected PLICSMOBILE T81 with the connected sensors is displayed.

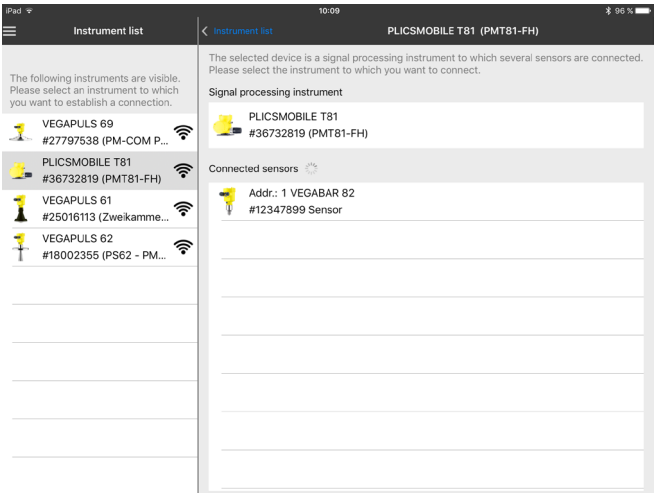

Fig. 15: Instrument list

By selecting the respective list entry, either the parameter adjustment of PLICSMOBILE or the connected sensors can be carried out. During the parameter adjustment of the sensors, PLICSMOBILE acts as a gateway and transmits the respective commands via HART communication to the sensors.

Now carry out the parameter adjustment of PLICSMOBILE T81 and the connected sensors via the respective adjustment menu.

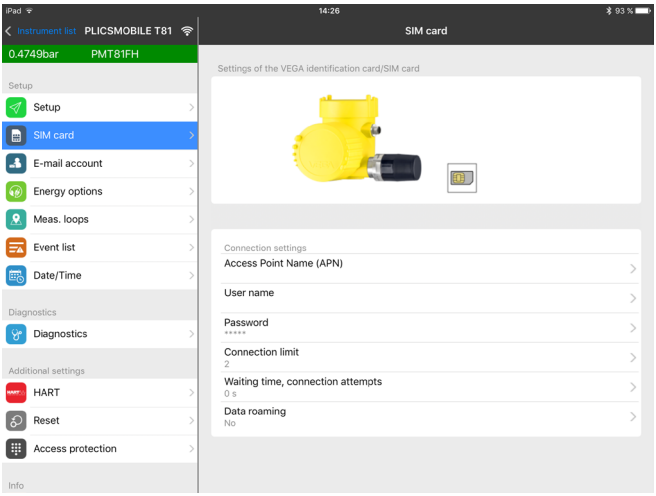

Fig. 16: Example of an app view - Settings SIM card

66083-EN-210527

7.6 Mobile network and SIM card

An activated SIM card (Mini-SIM format) with data transmission option is required for setup.

Information:
The SIM card is not included in the standard scope of delivery of the device. For operation, the VEGA identification card or alternatively an own activated SIM card is required.

VEGA identification card

To make the measured value transmission and remote maintenance as easy as possible, VEGA offers the service package " *User fee identification card*". This packages includes already the data transmission costs and the possibility of the remote maintenance through the VEGA service.

When using the VEGA identification card, you have the following advantages compared to a standard mobile phone contract:

- Remote maintenance by VEGA service possible after activation
- No roaming costs when using abroad
- Support for most popular countries and regions
- Support for all transmission paths (VEGA Inventory System, e-mail, SMS)
- Secure and stable data transmission by own APN
- Preconfigured, i.e. commissioning without further configuration

Remote parameter adjustment

Incoming data (network) connections (PLICSMOBILE T81) can only be established if the SIM card used supports a static IP address. Incoming data connections can be used for remote parameter adjustment, e.g. through the VEGA service (only when using the VEGA identification card).

Measured value transmission

Data connections outgoing from PLICSMOBILE T81 are established via GPRS/UMTS (volume-based billing). Outgoing connection are used for measured value transmission via e-mail/SMS/VEGA Inventory System.

During the transmission of the measured value via e-mail or Inventory System, approximately 5 KB data are transmitted. With hourly transmission, for example, this results in a monthly total net data volume of approximately 4 MB per sensor.

The mobile network provider carries out a so-called block rounding that depends on the selected tariff. When checking out of the network, the values are rounded to next higher billing units. Since PLICSMOBILE T81 checks out of the network after the transmission of every message (if the energy saving mode is activated), this block rounding applies to each transmission. If, for example, a tariff with block rounding to 100 KB is used, an hourly measurement transmission results in a monthly billing volume of over 70 MB. For that reason, you should choose a pure data tariff plan (M2M) with the lowest possible block rounding.

Insert SIM card

Insert the card (beveled side in front) into the card slot until it snaps in. The contact surface must point upward.

Caution:
The PLICSMOBILE T81 must be disconnected from voltage when inserting the SIM card. Keep ESD protection in mind when handling the SIM card. Electrostatic discharges can damage the SIM card or the PLICSMOBILE.

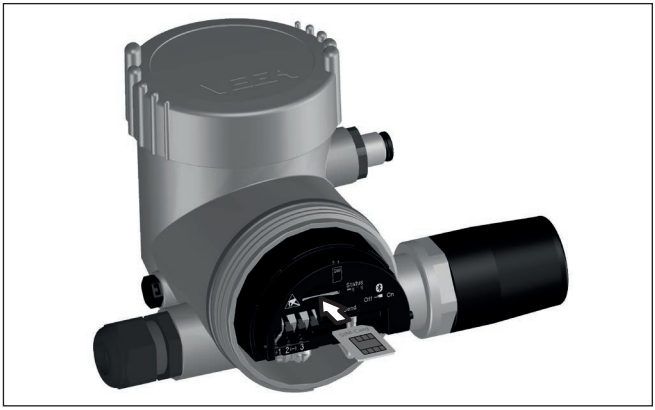

Fig. 17: Insert Mini-SIM card

Activate SIM card

To avoid misuse, the SIM card is generally locked by a PIN. To ensure that PLICSMOBILE can contact these locked SIM cards, first of all the PIN must be entered. For this purpose the assistant " *Activate SIM card*" is available in the DTM. Enter here the correct PIN for the card. The assistant also offers the option of changing the PIN.

Information:
When using the VEGA identification card, entering or deactivating a PIN is not required.

Then check if the card is logged into the network and if sufficient network coverage (signal strength) exists. For a reliable measured value transmission, a signal strength of at least 15 % should be displayed. This can be checked in the DTM menu " *Network information*" under " *Setup - Diagnosis*". You can also see the general device status via the status indication.

Status indication

The following operating conditions are signalled via the yellow LED (mobile network status indication):

- **LED does not light:** no operating voltage or power saving mode active
- **Constant flashing:** Instrument is not logged into the GSM network
- **Unsteady flashing (long OFF/short ON):** instrument is booked into the GSM network
- **Continuous light:** Transmission or dial-up connection active
- **Quick steady flashing after continuous light:** Measured value transmission failed

The following operating conditions are signalled via the blue LED (Bluetooth status indication):

- **LED does not light:** Bluetooth switched off or power saving mode active
- **Unsteady flashing (long OFF/short ON):** Bluetooth switched on
- **Permanent light:** Bluetooth connection is active

Information:
When the PLICSMOBILE T81 is in power saving mode, the LED status indicators are inactive. The LED indicators are active only during the time when a measurement with subsequent measured value transmission takes place.

"Send" button

By pushing this button, a manual measured value transmission will be triggered, independent of the configured time settings. This functions also if PLICSMOBILE T81 is in power saving mode. Here you can check by means of the yellow status LED if logging into the mobile network is possible.

7.7 Internet connection and measured value transmission

Internet connection

The transmission of measured values via e-mail or to VEGA Inventory System is always based on an internet connection. For connection, access data (user name/password) and the respective Access Point Name (APN) are required.

When using the VEGA service package " *User fee, identification card*" and the VEGA Inventory System, you need no access data or additional information because the required parameters are already preset by default. Requirement is that the VEGA service package and the PLICSMOBILE T81 are part of the same order.

Information:
Further information and a list of current mobile network providers along with their access data can be found in the online help of the PLICSMOBILE DTM.

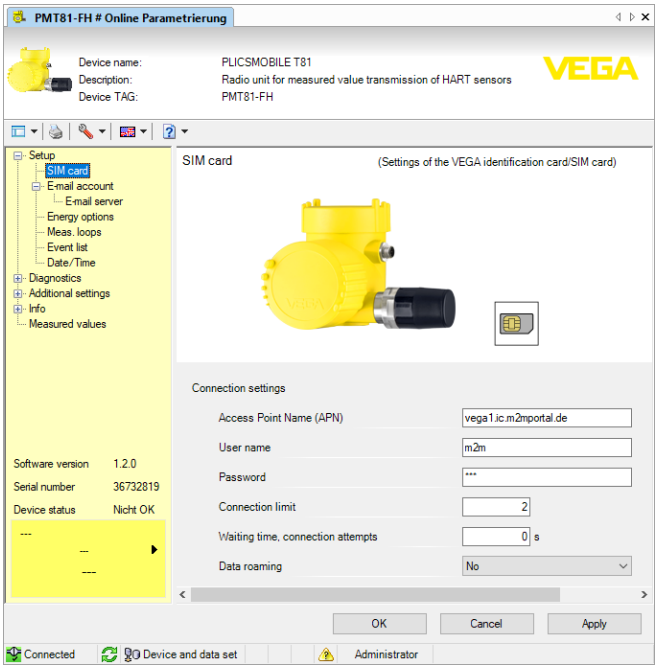

Fig. 18: Entering the Internet access data

Measured value transmission

The measured values can be transmitted optionally in the following ways:

- Via integrated mail client to any e-mail address
- Via SMS to any mobile phone
- Via https to the VEGA Inventory System

Under the DTM menu item " *Event list*" there is a convenient assistant for setting up measured value transmission. The measured values can be transmitted at individually definable times or intervals. A message can also be triggered when a certain level is exceeded or underrun. In addition, a status-controlled measured value transmission can be carried out, for example when a fault signal occurs.

E-mail transmission

For this option, an e-mail account with the names of the inbox and outbox servers (POP3/SMTP) as well as the user name/password are required for authentication. These data are available from your e-mail provider. For secure transmission, an encrypted connection via TLS is preset. Please note that for encrypted connections, other server names must normally be used. You can find further information in the online help of the PLICSMOBILE DTM.

The measurement data can be sent either directly in the e-mail or in an attached file. The formats TXT, CSV, HTML or XML are available.

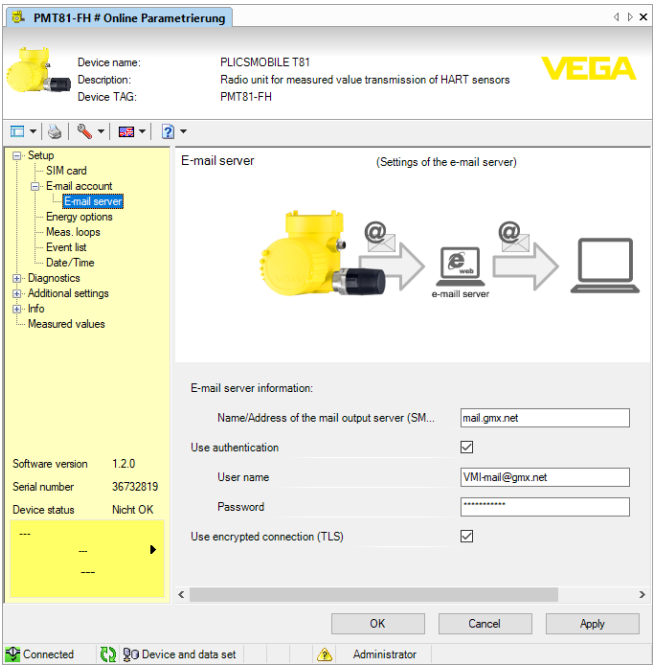

Fig. 19: Input of the e-mail access data

SMS transmission

For measured value transmission via SMS, no additional access data are required because all needed information is already available via the mobile phone contract.

VEGA Inventory System

For the configuration, only the URL or the IP address of the Inventory server are required. When hosting is carried out through VEGA, the server is contacted via the URL: " *data-vis.vega.com*".

8 Diagnostics and servicing

8.1 Maintenance

Maintenance

If the device is used properly, no special maintenance is required in normal operation.

Cleaning

The cleaning helps that the type label and markings on the instrument are visible.

Take note of the following:

- Use only cleaning agents which do not corrode the housings, type label and seals
- Use only cleaning methods corresponding to the housing protection rating

8.2 Rectify faults

Reaction when malfunction occurs

The operator of the system is responsible for taking suitable measures to rectify faults.

Causes of malfunction

The device offers maximum reliability. Nevertheless, faults can occur during operation. These may be caused by the following, e.g.:

- Measured value from sensor not correct
- Voltage supply
- Interference in the cables

Fault rectification

The first measures to be taken are to check the input/output signal as well as to evaluate the error messages via the DTM. The procedure is described below. In many cases, the causes can be determined and the faults rectified in this way.

Reaction after fault rectification

Depending on the reason for the fault and the measures taken, the steps described in chapter " *Setup*" must be carried out again or must be checked for plausibility and completeness.

24 hour service hotline

Should these measures not be successful, please call in urgent cases the VEGA service hotline under the phone no. **+49 1805 858550**.

The hotline is also available outside normal working hours, seven days a week around the clock.

Since we offer this service worldwide, the support is provided in English. The service itself is free of charge, the only costs involved are the normal call charges.

Error messages

Error	Cause	Rectification
No indication of the signal strength	No network available	Check network availability via mobile phone
E008	Sensor not found	Check connection of the sensor

Error	Cause	Rectification
E013	Sensor signals error, no valid measured value	Check sensor parameter adjustment Send sensor for repair
E030	Sensor in boot phase Measured value not valid	Check sensor parameter adjustment
E034	EEPROM CRC error	Switch the instrument off and on Carry out a reset Send instrument for repair
E035	ROM CRC error	Switch the instrument off and on Carry out a reset Send instrument for repair
E036	Instrument software not executable (during software update and after failed update)	Wait until software update is finished Carry out another software update
E042	Hardware error with self-check	Send instrument for repair
E053	Sensor measuring range is not read correctly	Communication error: Check sensor cable and shielding
E086	Error communication hardware (initialisation of the radio module failed)	Initialisation is carried out automatically. If the error exists permanently, send instrument for repair

8.3 How to proceed if a repair is necessary

You can find an instrument return form as well as detailed information about the procedure in the download area of our homepage: www.vega.com

By doing this you help us carry out the repair quickly and without having to call back for needed information.

If a repair is necessary, please proceed as follows:

- Print and fill out one form per instrument
- Clean the instrument and pack it damage-proof
- Attach the completed form and, if need be, also a safety data sheet outside on the packaging
- Please contact the agency serving you to get the address for the return shipment. You can find the agency on our home page www.vega.com.

Note:
If a battery-operated instrument is returned for repair, the battery/power pack must be removed. Please send only the instrument, not the battery/power pack.

9 Dismount

9.1 Dismounting steps

Take note of chapters " *Mounting*" and " *Connecting to voltage supply*" and carry out the listed steps in reverse order.

9.2 Disposal

The device is made of recyclable materials. For this reason, it should be disposed of by a specialist recycling company. Observe the applicable national regulations.

Battery/accumulator recycling

Note:
The disposal is subject to the EU directive on batteries and accumulators.

Batteries and accumulators contain some environmentally harmful but also some valuable raw materials that can be recycled. For that reason batteries and accumulators must not be disposed of in household waste.

All users are legally obligated to bring spent batteries to a suitable collection point, e.g. public collection points. You can also return the batteries and accumulators to us for correct disposal. Due to the very strict transport regulations for lithium-based batteries/accumulators, this is normally not a good idea because shipment is very expensive.

If you have no way to dispose of the old instrument properly, please contact us concerning return and disposal.

10 Certificates and approvals

10.1 Radio license for Europe

The instrument was tested according to the latest issues of the following harmonized standards:

- EN 300328
- EN 301511
- EN 301908-1
- EN 301908-2
- EN 300440

It is hence approved for use inside closed vessels in countries of the EU and EFTA.

10.2 Radio license for USA

This approval is only valid for USA. Hence the following text is only available in the English language:

This device complies with Part 15 of the FCC Rules. Operation is subject to the following two conditions:

- This device may not cause interference, and
- This device must accept any interference, including interference that may cause undesired operation of the device

Changes or modifications not expressly approved by the manufacturer could void the user's authority to operate this equipment.

This equipment complies with FCC radiation exposure limits set forth for an uncontrolled environment. This equipment should be installed and operated with minimum distance of 20 cm between the radiator and your body. This transmitter must not be co-located or operating in conjunction with any other antenna or transmitter.

This equipment has been tested and found to comply with the limits for a Class B digital device, pursuant to Part 15 of the FCC Rules. These limits are designed to provide reasonable protection against harmful interference in a residential installation. This equipment generates, uses and can radiate radio frequency energy and, if not installed and used in accordance with the instructions, may cause harmful interference to radio communications. However, there is no guarantee that interference will not occur in a particular installation. If this equipment does cause harmful interference to radio or television reception, which can be determined by turning the equipment off and on, the user is encouraged to try to correct the interference by one or more of the following measures:

- Reorient or relocate the receiving antenna
- Increase the separation between the equipment and receiver
- Connect the equipment into an outlet on a circuit different from that to which the receiver is connected
- Consult the dealer or an experienced radio/TV technician for help

10.3 Radio license for Canada

This approval is only valid for Canada. Hence the following texts are only available in the English/French language:

This device complies with Industry Canada's license-exempt RSS standard(s). Operation is subject to the following conditions:

- This device may not cause interference, and
- This device must accept any interference, including interference that may cause undesired operation of the device

This equipment complies with IC radiation exposure limits set forth for an uncontrolled environment. This equipment should be installed and operated with minimum distance of 20 cm between the radiator and your body. This transmitter must not be co-located or operating in conjunction with any other antenna or transmitter.

Le présent appareil est conforme aux CNR d'Industrie Canada applicables aux appareils radio exempts de licence. L'exploitation est autorisée aux conditions suivantes:

- L'appareil ne doit pas produire de brouillage; et
- L'utilisateur de l'appareil doit accepter tout brouillage radioélectrique subi, même si le brouillage est susceptible d'en compromettre le fonctionnement.

Cet équipement est conforme aux limites d'exposition aux rayonnements IC établies pour un environnement non contrôlé. Cet équipement doit être installé et utilisé avec un minimum de 20 cm de distance entre la source de rayonnement et votre corps. Ce transmetteur ne doit pas être place au même endroit ou utilise simultanément avec un autre transmetteur ou antenne.

10.4 Installation and operation in the USA and Canada

This information is only valid for USA and Canada. Hence the following text is only available in the English language.

Installations in the US shall comply with the relevant requirements of the National Electrical Code (ANSI/NFPA 70).

Installations in Canada shall comply with the relevant requirements of the Canadian Electrical Code

10.5 Environment management system

Protection of the environment is one of our most important duties. That is why we have introduced an environment management system with the goal of continuously improving company environmental protection. The environment management system is certified according to DIN EN ISO 14001. Please help us fulfil this obligation by observing the environmental instructions in chapters " *Packaging, transport and storage*", " *Disposal*" of these operating instructions.

11 Supplement

11.1 Technical data PLICSMOBILE T81

Note for approved instruments

The technical data in the respective safety instructions are valid for approved instruments (e.g. with Ex approval). In some cases, these data can differ from the data listed herein.

All approval documents can be downloaded from our homepage.

General data	
Materials	
– Plastic housing	Plastic PBT (Polyester)
– Aluminium die-cast housing	Aluminium die-casting AlSi10Mg, powder-coated (Basis: Polyester)
– Stainless steel housing	316L
– Cable gland	PA
– Sealing, cable gland	NBR
– Blind plug, cable gland	PA
– Seal between housing and housing lid	Silicone SI 850 R, NBR silicone-free
– Ground terminal	316L
Weight	
– Plastic housing	approx. 1.18 kg (2.59 lbs)
– Aluminium housing	approx. 1.65 kg (3.65 lbs)
– Stainless steel housing	approx. 3 kg (6.61 lbs)

Voltage supply	
Operating voltage [1]	9.6 … 32 V DC
Power consumption [2]	
– Power saving mode (9 V/12 V)	0.18 mW/0.3 mW
– Power saving mode (24 V/32 V)	1.8 mW/3.7 mW
– Permanent operation	1.1 W
– Peak power (measured value transmission)	11 W
Power requirement [3]	
– Measurement cycle incl. transmission	15 mWh
Sensor power supply	
– Off-load voltage	31 V (24 V with Ex version)
– Max. current	80 mA (26 mA with Ex version)

[1] When the instrument is powered by an external voltage supply, make sure the voltage supply unit has a sufficient current carrying capacity. With a voltage supply < 9.6 V, current peaks of up to 2 A must be expected.
[2] The listed power specifications include the voltage supply of a HART sensor with 20 mA.
[3] The listed energy requirement includes the voltage supply of a HART sensor (VEGAPULS 61 with 4 mA (multidrop mode) and 12 V operating voltage.

Sensor input	
Number of sensors	up to 15 x HART sensors
Terminal voltage	approx. 14 V with 15 sensors (60 mA)
Current limitation	approx. 80 mA
Mobile network	
SIM card slot	Mini-SIM (25 x 15 mm)
Mobile radio standard	2G (GSM), 3G (UMTS), 4G (LTE)
Data rate	CAT 4 (150 Mbit/s download, 50 Mbit/s upload)
Frequency bands Europe/Asia	
– LTE	2/4/5/7/17
– UMTS	850/900/1700/1900/2100
– GSM	Quadband
Frequency bands North/South America	
– LTE	1/3/5/8/20
– UMTS	850/900/1900/2100
– GSM	Quadband
Antenna version	Isotropic (Omni) antenna
Bluetooth	
Bluetooth standard	Bluetooth 5.0 (downward compatible to Bluetooth 4.0 LE)
Max. participants	1
Effective range typ. [4]	25 m (82 ft)
Indicators	
LED displays	
– Status, mobile network	1 x LED yellow
– Status, Bluetooth	1 x LED blue
Electromechanical data	
Cable entry/plug	
– Electronics housing	1 x cable gland M20 x 1.5 (cable ø 5 … 9 mm), 1 x plug for sensor connection
Spring-loaded terminals for wire cross-section	
– Massive wire, stranded wire	0.2 … 2.5 mm^2 (AWG 24 … 14)
– Stranded wire with end sleeve	0.2 … 1.5 mm^2 (AWG 24 … 16)
Sensor connection cable	
– Number of cores	Four cores (two with Ex version) + Screen
– Wire cross-section	0.5 mm^2
– Length	5/10/25 m (196/393/984 ft)
– Diameter approx.	6 mm (0.236 in)

[4] Depending on the local conditions

– Material cable cover	PUR
– Colour	Black (blue with Ex version)

Ambient conditions	
Ambient temperature	-25 … +60 °C (-13 … +140 °F)
Storage and transport temperature	-25 … +80 °C (-13 … +176 °F)

Mechanical environmental conditions	
Sinusoidal vibrations	
– Wall mounting	Class 4M8 acc. to IEC 60271-3-4
– Tube mounting	Class 4M5 acc. to IEC 60271-3-4
Shock resistance	Class 6M4 acc. to IEC 60271-3-6

Electrical protective measures	
Protection rating	IP66 [5]
Overvoltage category (IEC 61010-1)	
– up to 2000 m (6562 ft) above sea level	II
– up to 5000 m (16404 ft) above sea level	II (only with connected overvoltage protection)
– up to 5000 m (16404 ft) above sea level	I
Pollution degree [6]	4
Protection rating (IEC 61010-1)	II

Measures for electrical separation	
Reliable separation according to VDE 0106, Part 1, between power supply and input	
– Reference voltage	50 V
– Voltage resistance of the insulation	1.5 kV

Radio approvals USA/Canada (FCC/IC)	
Aluminium housing (D)	PMT81D, FCC ID: O6QPMT8X IC: 3892A-PMT8X
Stainless steel housing (W)	PMT81W, FCC ID: O6QPMT8X IC: 3892A-PMT8X
Plastic housing (R)	PMT81R, FCC ID: O6QPMT8X IC: 3892A-PMT8X

Approvals

Instruments with approvals can have different technical specifications depending on the version.

For that reason the associated approval documents of these instruments have to be carefully noted. They are part of the delivery or can be downloaded under " www.vega.com", " *Instrument search (serial number)*" as well as via " *Downloads*" and " *Approvals*".

[5] A suitable cable is required for maintaining the protection rating.
[6] When used with fulfilled housing protection

11.2 Technical data PLICSMOBILE B81

General data PLICSMOBILE B81	
Materials	
– Aluminium housing	Aluminium die-casting
– Cable gland	PA
– Sealing, cable gland	NBR
– Blind plug, cable gland	PA
– Seal between housing and housing lid	Silicone SI 850 R, NBR silicone-free
– Ground terminal	316L
Weight	
– Aluminium housing	approx. 1.66 kg (3.66 lbs)
Approved battery types	Lithium battery or NiMH accumulator
Battery format	Type D (Mono)

Power supply PLICSMOBILE B81	
Necessary power supply for charging NiMH accumulators	20 … 32 V DC

Output voltage PLICSMOBILE B81	
When using NiMH rechargeable batteries	20 V DC [7]
When using lithium batteries	14.4 V DC

Electromechanical data PLICSMOBILE B81	
Cable entry/plug	
– Electronics housing	2 x cable entry M20 x 1.5 (cable: ø 5 … 9 mm)
Spring-loaded terminals for wire cross-section	
– Massive wire, stranded wire	0.2 … 1.5 mm^2 (AWG 24 … 16)
– Stranded wire with end sleeve	0.2 … 1.5 mm^2 (AWG 24 … 16)
Connection cable, field device	
– Number of cores	Three cores + Screen
– Wire cross-section	0.5 mm^2
– Length	5/10/25 m (196/393/984 ft)
– Diameter approx.	6 mm (0.236 in)
– Material cable cover	PUR
– Colour	Black
Connection cable, solar module	
– Number of cores	Two cores
– Wire cross-section	0.5 mm^2
– Length	5/10/25 m (196/393/984 ft)
– Diameter approx.	6 mm (0.236 in)

[7] Increased accumulator voltage due to integrated voltage converter

– Material cable cover	PUR
– Colour	Black

Ambient conditions PLICSMOBILE B81 [8]	
Ambient temperature NiMH accumulator	
– Ambient temperature (discharging)	-20… +60 °C (-4 … +140 °F)
– Charging temperature	0 … +45 °C (+32 … +113 °F) [9]
Ambient temperature Lithium battery	
– Ambient temperature	-40… +85 °C (-40 … +185 °F)
Vibration resistance acc. to EN/IEC 60271-3-4	
– With wall mounting	Class 4M6
– With tube mounting	Class 4M5

Mechanical environmental conditions	
Sinusoidal vibrations	
– Wall mounting	Class 4M6 acc. to IEC 60271-3-4
– Tube mounting	Class 4M5 acc. to IEC 60271-3-4
Impacts	Class 6M4 acc. to IEC 60271-3-6

Electrical protective measures PLICSMOBILE B81	
Protection rating	IP68 (0.2 bar) [10]
Overvoltage category (IEC 61010-1)	
– up to 2000 m (6562 ft) above sea level	II
– up to 5000 m (16404 ft) above sea level	II (only with connected overvoltage protection)
– up to 5000 m (16404 ft) above sea level	I
Protection rating (IEC 61010-1)	II

NiMH accumulator for PLICSMOBILE B81	
Accumulator type	4x NiMH series D (Mono)
Manufacturer	Ansmann
Capacitance	10 Ah
Nominal voltage	1.2 V DC

Lithium battery for PLICSMOBILE B81	
Battery type	4x Lithium battery series D (Mono)
Manufacturer/Type	Saft LSH 20
Capacitance	13 Ah
Nominal voltage	3.6 V DC

[8] The ambient temperatures depend on the batteries/accumulators used.
[9] Due to a protective circuit, charging outside this temperature range is not possible.
[10] A suitable cable is required for maintaining the protection rating.

11.3 Technical data PLICSMOBILE S81

PLICSMOBILE S81

Solar module	
– Power	20 W
– Max. open circuit voltage	21.5 V DC
– Voltage with maximum output	17.2 V DC
– Current with maximum output	1.16 A
– Max. shortcircuit current	1.25 A
– Weight	2.2 kg (4.8 lbs)
Ambient temperature	-40 … +85 °C (-40 … +185 °F)
Protection rating	IP67 [11]

11.4 Dimensions

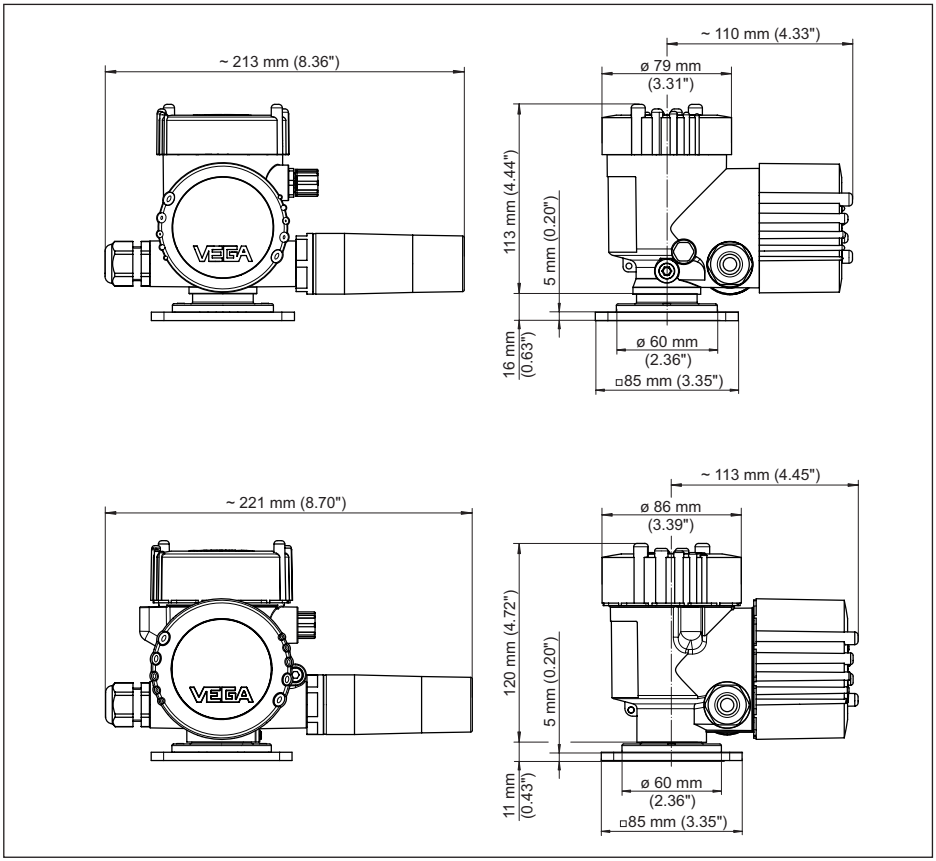

Fig. 20: Dimensions PLICSMOBILE T81 with plastic housing and StSt/Aluminium housing

[11] A suitable cable is required for maintaining the protection rating.

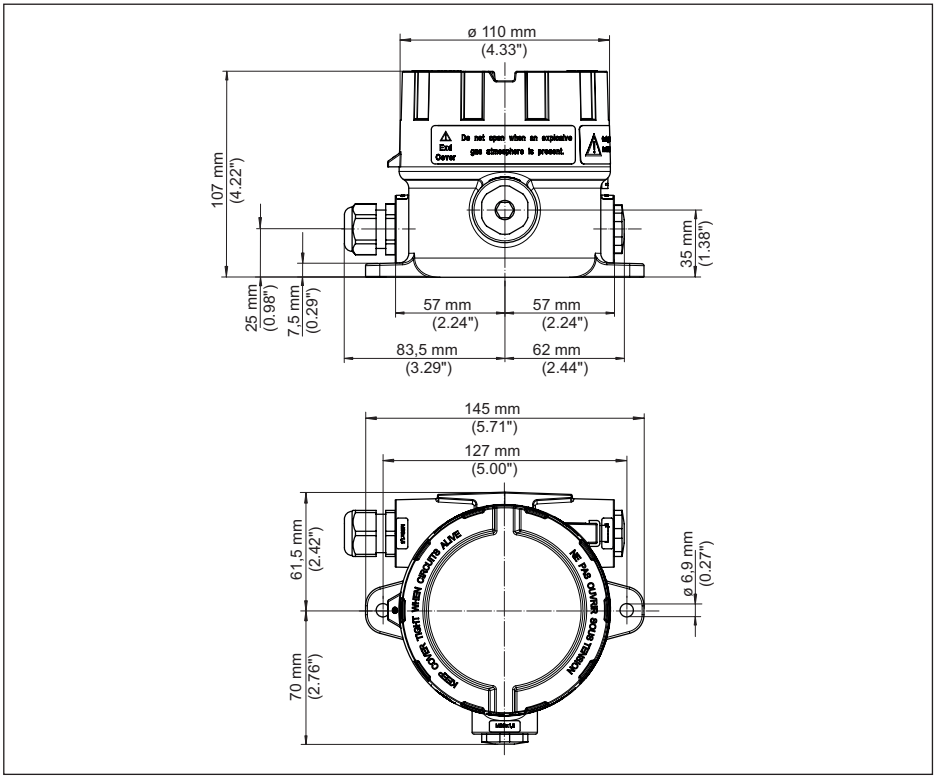

Fig. 21: Dimensions PLICSMOBILE B81 with Aluminium housing

66083-EN-210527

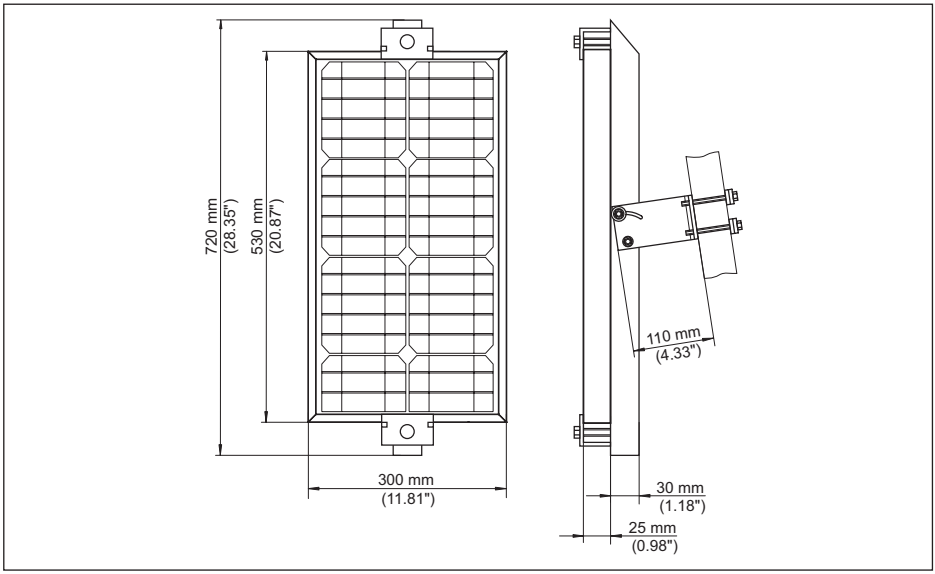

Fig. 22: Dimensions PLICSMOBILE S81

11.5 Industrial property rights

VEGA product lines are global protected by industrial property rights. Further information see www.vega.com.

VEGA Produktfamilien sind weltweit geschützt durch gewerbliche Schutzrechte.

Nähere Informationen unter www.vega.com.

Les lignes de produits VEGA sont globalement protégées par des droits de propriété intellectuelle. Pour plus d'informations, on pourra se référer au site www.vega.com.

VEGA lineas de productos están protegidas por los derechos en el campo de la propiedad industrial. Para mayor información revise la pagina web www.vega.com.

Линии продукции фирмы ВЕГА защищаются по всему миру правами на интеллектуальную собственность. Дальнейшую информацию смотрите на сайте www.vega.com.

VEGA系列产品在全球享有知识产权保护。

进一步信息请参见网站< www.vega.com。

11.6 Hash function acc. to mbed TLS

mbed TLS: Copyright (C) 2006-2015, ARM Limited, All Rights Reserved SPDX-License-Identifier: Apache-2.0

Licensed under the Apache License, Version 2.0 (the "License"); you may not use this file except in compliance with the License. You may obtain a copy of the License at http://www.apache.org/licenses/LICENSE-2.0.

Unless required by applicable law or agreed to in writing, software distributed under the License is distributed on an "AS IS" BASIS, WITHOUT WARRANTIES OR CONDITIONS OF ANY KIND, either express or implied. See the License for the specific language governing permissions and limitations under the License.

11.7 Trademark

All the brands as well as trade and company names used are property of their lawful proprietor/originator.

INDEX

A
Access data 35, 36
Access number 35
Access Point Name (APN) 35
Accumulator 8, 22
Accumulator capacity 25
Adjustment 30
Application area 8

B
Battery 8, 22
Battery capacity 25
Battery chamber 22
Bluetooth 27, 28
Bluetooth interface 30
Bluetooth USB adapter 30

C
Cable
– Grounding 13
– Shielding 13
Causes of malfunction 38
Connection procedure 15
Connection technology 15
CSD 33, 34

D
Data block rounding 33
Dial-Out 33
Dial-up connection 33
Documentation 7
DTM 8, 28, 30
– DTM Collection 30
– Full version 30

E
E-mail 8, 36

F
Fault
– Rectification 38
FDT 30

G
GPRS 8, 33, 35
GPS 8
GSM 8

H
HART 27

I
Instrument return form 39
Inventory System 36

L
LED displays 34
Lithium battery 22

M
M2M 33
Measured value transmission 22, 26, 35, 36
Mounting 10
– Carrier rail mounting 11
– Tube 12
– Wall mounting 11
Mounting options 36
Multi-band 8
Multidrop 27
Multiviewer 30

N
Network coverage 34

O
Online help 30
Orientation, solar module 24

P
PACTware 8, 28
PIN 34
Plug 14
Power options 26
Power saving function 8
Power saving mode 22, 25, 26, 27, 33, 35
Power supply unit 22

Q
QR code 7

R
Remote parameter adjustment 8, 26, 33
Repair 39
Roaming 33

S
Self-discharge 25
Sensor connection cable 14
Serial number 7
Service hotline 38
Signal strength 34

SIM card 33, 34
SMS 8
Software update 30
Solar module 23
Standby 25
Status indications 34

T

Tank calculation 30
Tube holder 24
Type label 7

V

VEGA identification card 33
VEGA Inventory System 8
Visualization 8
VMI 8
Voltage supply 8, 14

Printing date:

All statements concerning scope of delivery, application, practical use and operating conditions of the sensors and processing systems correspond to the information available at the time of printing.
Subject to change without prior notice

© VEGA Grieshaber KG, Schiltach/Germany 2021

66083-EN-210527

VEGA Grieshaber KG
Am Hohenstein 113
77761 Schiltach
Germany

Phone +49 7836 50-0
E-mail: info.de@vega.com
www.vega.com