Operating Instructions

Radar sensor for continuous level measurement of liquids

VEGAPULS 6X

Two-wire 4 … 20 mA/HART

Document ID: 66101

Contents

1 About this document ... 4
1.1 Function ... 4
1.2 Target group ... 4
1.3 Symbols used ... 4

2 For your safety ... 5
2.1 Authorised personnel ... 5
2.2 Appropriate use ... 5
2.3 Warning about incorrect use ... 5
2.4 General safety instructions ... 5
2.5 Modes for worldwide use ... 6
2.6 Installation and operation in the USA and Canada ... 6

3 Product description ... 7
3.1 Configuration ... 7
3.2 Principle of operation ... 8
3.3 Packaging, transport and storage ... 9
3.4 Accessories ... 10

4 Mounting ... 11
4.1 General instructions ... 11
4.2 Housing features ... 11
4.3 Mounting preparations, mounting strap ... 13
4.4 Mounting versions, plastic horn antenna ... 15
4.5 Mounting instructions ... 17
4.6 Measuring rigs - bypass ... 35
4.7 Measurement setup - Flow ... 36

5 Connecting to power supply ... 39
5.1 Preparing the connection ... 39
5.2 Connecting ... 40
5.3 Wiring plan, single chamber housing ... 41
5.4 Wiring plan, double chamber housing ... 42
5.5 Wiring plan - version IP66/IP68, 1 bar ... 43
5.6 Switch-on phase ... 44

6 IT-Security and access protection ... 45
6.1 IT-Security ... 45
6.2 Bluetooth radio interface ... 46
6.3 Protection of the parameterization ... 46
6.4 Storing the codes in myVEGA ... 47

7 Set up with the display and adjustment module ... 48
7.1 Insert display and adjustment module ... 48
7.2 Adjustment system ... 49
7.3 Measured value indication - Selection of national language ... 50
7.4 Parameterization ... 51
7.5 Saving the parameterisation data ... 70

8 Setup with PACTware ... 71
8.1 Connect the PC ... 71
8.2 Parameter adjustment with PACTware ... 71

8.3 Saving the parameterisation data ... 73

9 Menu overview ... 74
9.1 Display and adjustment unit (on site) ... 74
9.2 VEGA Tools-App (Bluetooth) and DTM (on-site, signal line, Bluetooth) ... 78
9.3 Expert settings ... 83

10 Set up with other systems ... 86
10.1 DD adjustment programs ... 86
10.2 Field Communicator 375, 475 ... 86

11 Diagnosis, asset management and service ... 87
11.1 Maintenance ... 87
11.2 Measured value and event memory ... 87
11.3 Asset Management function ... 88
11.4 Rectify faults ... 91
11.5 Exchanging the electronics module ... 95
11.6 Software update ... 96
11.7 How to proceed if a repair is necessary ... 97

12 Dismount ... 98
12.1 Dismounting steps ... 98
12.2 Disposal ... 98

13 Certificates and approvals (in preparation) ... 99
13.1 Radio licenses ... 99
13.2 Approvals for Ex areas ... 99
13.3 Approvals as overfill protection ... 99
13.4 Food and pharmaceutical certificates ... 99
13.5 EU conformity ... 99
13.6 NAMUR recommendations ... 99
13.7 Environment management system ... 100

14 Supplement ... 101
14.1 Technical data ... 101
14.2 Radio astronomy stations ... 117
14.3 Dimensions ... 117
14.4 Industrial property rights ... 130
14.5 Licensing information for open source software ... 130
14.6 Trademark ... 130

Safety instructions for Ex areas

Take note of the Ex specific safety instructions for Ex applications. These instructions are attached as documents to each instrument with Ex approval and are part of the operating instructions.

Editing status: 2021-09-27

66101-EN-211011

1 About this document

1.1 Function

This instruction provides all the information you need for mounting, connection and setup as well as important instructions for maintenance, fault rectification, the exchange of parts and the safety of the user. Please read this information before putting the instrument into operation and keep this manual accessible in the immediate vicinity of the device.

1.2 Target group

This operating instructions manual is directed to trained personnel. The contents of this manual must be made available to the qualified personnel and implemented.

1.3 Symbols used

Document ID
This symbol on the front page of this instruction refers to the Document ID. By entering the Document ID on www.vega.com you will reach the document download.

Information, note, tip: This symbol indicates helpful additional information and tips for successful work.

Note: This symbol indicates notes to prevent failures, malfunctions, damage to devices or plants.

Caution: Non-observance of the information marked with this symbol may result in personal injury.

Warning: Non-observance of the information marked with this symbol may result in serious or fatal personal injury.

Danger: Non-observance of the information marked with this symbol results in serious or fatal personal injury.

Ex applications
This symbol indicates special instructions for Ex applications.

- **List**
  The dot set in front indicates a list with no implied sequence.

1 **Sequence of actions**
Numbers set in front indicate successive steps in a procedure.

Battery disposal
This symbol indicates special information about the disposal of batteries and accumulators.

2 For your safety

2.1 Authorised personnel

All operations described in this documentation must be carried out only by trained, qualified personnel authorised by the plant operator.

During work on and with the device, the required personal protective equipment must always be worn.

2.2 Appropriate use

VEGAPULS 6X is a sensor for continuous level measurement.

You can find detailed information about the area of application in chapter " *Product description*".

Operational reliability is ensured only if the instrument is properly used according to the specifications in the operating instructions manual as well as possible supplementary instructions.

2.3 Warning about incorrect use

Inappropriate or incorrect use of this product can give rise to application-specific hazards, e.g. vessel overfill through incorrect mounting or adjustment. Damage to property and persons or environmental contamination can result. Also, the protective characteristics of the instrument can be impaired.

2.4 General safety instructions

This is a state-of-the-art instrument complying with all prevailing regulations and directives. The instrument must only be operated in a technically flawless and reliable condition. The operator is responsible for the trouble-free operation of the instrument. When measuring aggressive or corrosive media that can cause a dangerous situation if the instrument malfunctions, the operator has to implement suitable measures to make sure the instrument is functioning properly.

The safety instructions in this operating instructions manual, the national installation standards as well as the valid safety regulations and accident prevention rules must be observed by the user.

For safety and warranty reasons, any invasive work on the device beyond that described in the operating instructions manual may be carried out only by personnel authorised by the manufacturer. Arbitrary conversions or modifications are explicitly forbidden. For safety reasons, only the accessory specified by the manufacturer must be used.

To avoid any danger, the safety approval markings and safety tips on the device must also be observed.

The low transmitting power of the radar sensor is far below the internationally approved limits. No health impairments are to be expected with intended use. The band range of the measuring frequency can be found in chapter " *Technical data*".

2.5 Modes for worldwide use

Country specific settings for the radar signals are determined via the operating mode. The operating mode must be set in the operating menu via the respective adjustment tool at the beginning of the setup (see chapter " *Setup*" resp. " *Menu overview*".

Caution:
Operating the device without selecting the appropriate country group constitutes a violation of the regulations of the radio approvals of the respective country.

Further information can be found in the document " *Regulations for radar level measuring instruments with radio licenses*" on our homepage.

2.6 Installation and operation in the USA and Canada

This information is only valid for USA and Canada. Hence the following text is only available in the English language.

Installations in the US shall comply with the relevant requirements of the National Electrical Code (ANSI/NFPA 70).

Installations in Canada shall comply with the relevant requirements of the Canadian Electrical Code

A Class 2 power supply unit has to be used for the installation in the USA and Canada.

3 Product description

3.1 Configuration

Scope of delivery

The scope of delivery encompasses:

- Radar sensor, possibly with accessories
  - Disc springs (for flange version with plastic plating) [1)]
  - Hexagon socket wrench (for instruments with swivel holder)
  - Optional accessory
- Information sheet " *PINs and Codes*" (in versions SIL, IT-Security, Bluetooth) with:
  - Bluetooth access code
- Information sheet " *Access protection*" with:
  - Bluetooth access code
  - Emergency Bluetooth unlock code
  - Emergency device code
- Documentation
  - Quick setup guide VEGAPULS 6X
  - Instructions for optional instrument components
  - Ex-specific " *Safety instructions*" (with Ex versions)
  - Radio licenses
  - If necessary, further certificates

Note:
Optional instrument features are also described in this operating instructions manual. The respective scope of delivery results from the order specification.

Scope of this operating instructions

This operating instructions manual applies to the following instrument versions:

- Hardware version from 1.0.0
- Software version from 1.0.0

Type label

The type label contains the most important data for identification and use of the instrument:

[1)] Use see chapter "Mounting instructions, sealing to the process"

Fig. 1: Layout of the type label (example)

1 *Instrument type, product code*
2 *Field for approvals*
3 *Technical data*
4 *Data matrix code for VEGA Tools app*
5 *Reminder to observe the instrument documentation*
6 *Bluetooth access code*

Serial number - Instrument search

The type label contains the serial number of the instrument. With it you can find the following instrument data on our homepage:

- Product code (HTML)
- Delivery date (HTML)
- Order-specific instrument features (HTML)
- Operating instructions and quick setup guide at the time of shipment (PDF)
- Test certificate (PDF) - optional

Move to " www.vega.com" and enter in the search field the serial number of your instrument.

Alternatively, you can access the data via your smartphone:

- Download the VEGA Tools app from the " *Apple App Store*" or the " *Google Play Store*"
- Scan the QR-code on the type label of the device or
- Enter the serial number manually in the app

3.2 Principle of operation

Application area

The VEGAPULS 6X is a radar sensor for continuous level measurement of liquids as well as bulk solids under different process conditions.

The small threaded fittings offer particular advantages in small tanks or tight mounting spaces. The very good signal focusing ensures the use in vessels with many installations such as stirrers and heating spirals.

The flange connections are ideal for level measurement in very high silos, large bunkers and segmented vessels. The very good signal focussing ensures easy setup and reliable measurement.

Antenna systems

The instrument is available with different antenna systems:

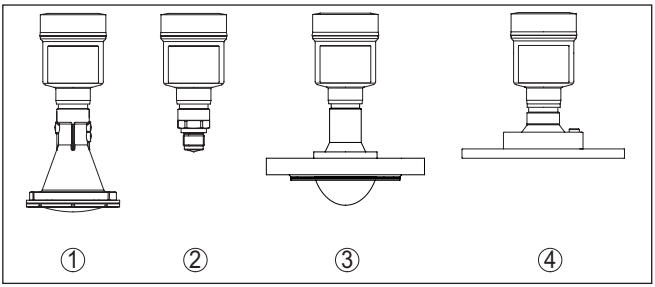

Fig. 2: Antenna systems VEGAPULS 6X

1 Plastic horn antenna
2 Thread with integrated antenna system
3 Flange with plastic plating
4 Flange with lens antenna

Functional principle

The instrument emits a continuous, frequency-modulated radar signal through its antenna. The emitted signal is reflected by the medium and received by the antenna as an echo with modified frequency. The frequency change is proportional to the distance and is converted into the level.

3.3 Packaging, transport and storage

Packaging

Your instrument was protected by packaging during transport. Its capacity to handle normal loads during transport is assured by a test based on ISO 4180.

The packaging consists of environment-friendly, recyclable cardboard. For special versions, PE foam or PE foil is also used. Dispose of the packaging material via specialised recycling companies.

Transport

Transport must be carried out in due consideration of the notes on the transport packaging. Nonobservance of these instructions can cause damage to the device.

Transport inspection

The delivery must be checked for completeness and possible transit damage immediately at receipt. Ascertained transit damage or concealed defects must be appropriately dealt with.

Storage

Up to the time of installation, the packages must be left closed and stored according to the orientation and storage markings on the outside.

Unless otherwise indicated, the packages must be stored only under the following conditions:

- Not in the open
- Dry and dust free
- Not exposed to corrosive media
- Protected against solar radiation
- Avoiding mechanical shock and vibration

Storage and transport temperature

- Storage and transport temperature see chapter " *Supplement - Technical data - Ambient conditions*"
- Relative humidity 20 … 85 %

Lifting and carrying

With instrument weights of more than 18 kg (39.68 lbs) suitable and approved equipment must be used for lifting and carrying.

3.4 Accessories

The instructions for the listed accessories can be found in the download area on our homepage.

PLICSCOM

The display and adjustment module is used for measured value indication, adjustment and diagnosis.

The integrated Bluetooth module (optional) enables wireless adjustment via standard adjustment devices.

VEGACONNECT

The interface adapter VEGACONNECT enables the connection of communication-capable instruments to the USB interface of a PC.

VEGADIS 81

The VEGADIS 81 is an external display and adjustment unit for VEGA plics® sensors.

VEGADIS 82

VEGADIS 82 is suitable for measured value indication and adjustment of sensors with HART protocol. It is looped into the 4 … 20 mA/HART signal cable.

PLICSMOBILE T81

The PLICSMOBILE T81 is an external GSM/GPRS/UMTS radio unit for transmission of measured values and for remote parameter adjustment of HART sensors.

PLICSMOBILE 81

PLICSMOBILE 81 is an internal GSM/GPRS/UMTS radio unit for HART sensors for transmitting measured values and for remote parameterization.

Welded socket, threaded and hygienic adapter

Welded sockets are used to connect the devices to the process, threaded and hygienic adapters for easy adaptation of devices with standard threaded fittings, e.g. to hygienic connections on the process side.

Flanges

Screwed flanges are available in different versions according to the following standards: DIN 2501, EN 1092-1, BS 10, ASME B 16.5, JIS B 2210-1984, GOST 12821-80.

4 Mounting

4.1 General instructions

Protection against moisture

Protect your instrument against moisture ingress through the following measures:

- Use a suitable connection cable (see chapter " *Connecting to power supply*")
- Tighten the cable gland or plug connector
- Lead the connection cable downward in front of the cable entry or plug connector

This applies mainly to outdoor installations, in areas where high humidity is expected (e.g. through cleaning processes) and on cooled or heated vessels.

Note:
Make sure that during installation or maintenance no moisture or dirt can get inside the instrument.

To maintain the housing protection, make sure that the housing lid is closed during operation and locked, if necessary.

Process conditions

Note:
For safety reasons, the instrument must only be operated within the permissible process conditions. You can find detailed information on the process conditions in chapter " *Technical data*" of the operating instructions or on the type label.

Hence make sure before mounting that all parts of the instrument exposed to the process are suitable for the existing process conditions.

These are mainly:

- Active measuring component
- Process fitting
- Process seal

Process conditions in particular are:

- Process pressure
- Process temperature
- Chemical properties of the medium
- Abrasion and mechanical influences

Second Line of Defense

As a standard feature, the VEGAPULS 6X is separate from the process through its plastic antenna encapsulation.

Optionally, the instrument is available with a Second Line of Defense (SLOD), a second process separation. It is located as gas-tight leadthrough between the process component and the electronics. This means additional safety against penetration of the medium fron the process into the instrument.

4.2 Housing features

Filter element

The filter element in the housing is used for ventilation of the housing.

For effective ventilation, the filter element must always be free of deposits. Therefore, mount the device so that the filter element is protected against deposits.

Caution:
Do not use a high-pressure cleaner. The filter element could be damaged, which would allow moisture into the housing.

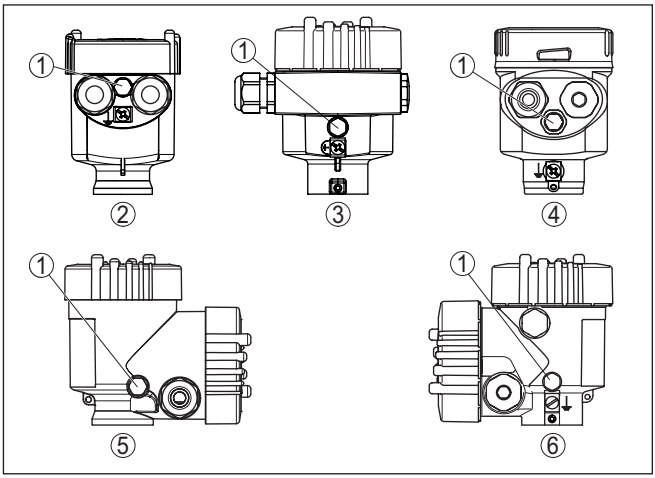

Fig. 3: Position of the filter element depending on housing

1 *Filter element*
2 *Plastic single chamber*
3 *Aluminium single chamber, stainless steel single chamber (precision casting)*
4 *Stainless steel single chamber (electropolished)*
5 *Plastic double chamber*
6 *Aluminium, stainless steel double chamber housing (precision casting)*

For devices in protection class IP66/IP68 (1 bar), ventilation is provided by a capillary in the fixed cable. In these devices, a blind plug is installed in the housing instead of the filter element.

Housing orientation

The housing of VEGAPULS 6X can be rotated completely through 360°. This allows the display to be read optimally and the device to be aligned for easy cable insertion. [2)]

Depending on the version and housing material, the locking screw on the housing neck must be loosened. The housing can then be turned to the correct position. As soon as the this position is reached, tighten the locking screw. Use an hexagon spanner size 3.

[2)] No limitation by a rotation stop

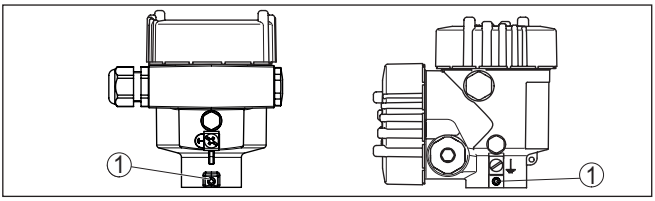

Fig. 4: Position of the locking screw depending on housing

1 Locking screw
2 Aluminium single chamber, stainless steel single chamber (precision casting)
3 Aluminium, stainless steel double chamber housing (precision casting)

Information:
For the housing orientation, observe the information on polarization in chapter " *Mounting instructions*".

Cover catch

The housing lid on housings made of aluminium and stainless steel (fine-cast) can be secured by a screw. This protects the instrument from unauthorised opening of the lid.

The locking screw has two holes drilled through the head which allow it also to be sealed.

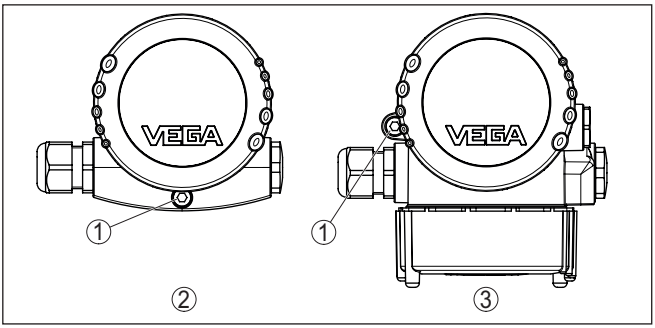

Fig. 5: Position of the safety screw depending on housing

1 Safety screw
2 Single chamber housing
3 Double chamber housing

4.3 Mounting preparations, mounting strap

The mounting strap is supplied unassembled (optionally) as accessory part of the plastic horn antenna and must be screwed to the sensor before setup with three hexagon socket screws M5 x 10 and spring washers. Max. torque, see chapter " *Technical data*". Required tools: Allen wrench size 4.

There are two different variants of screwing the strap to the sensor, see following illustration:

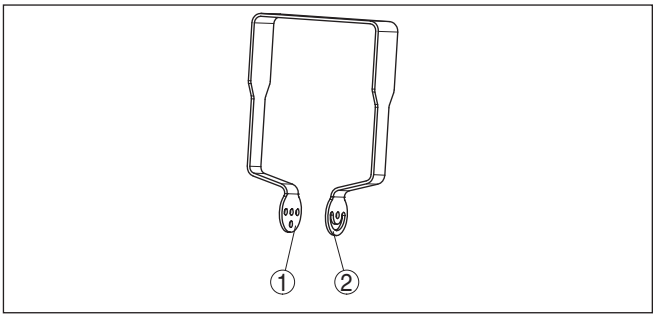

Fig. 6: Mounting strap for screwing to the sensor

1 For angle of inclination in steps
2 For angle of inclination, infinitely variable

Depending on the selected variant, the sensor can be rotated in the strap:

- Single chamber housing
  - Angle of inclination in three steps 0°, 90° and 180°
  - Angle of inclination 180°, infinitely variable
- Double chamber housing
  - Angle of inclination in two steps 0° and 90°
  - Angle of inclination 90°, infinitely variable

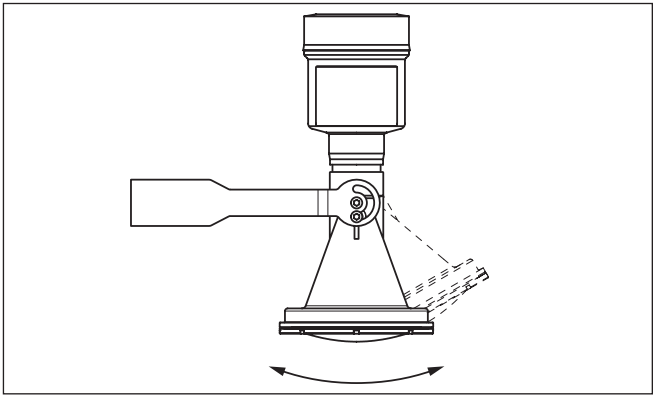

Fig. 7: Adjustment of the angle of inclination

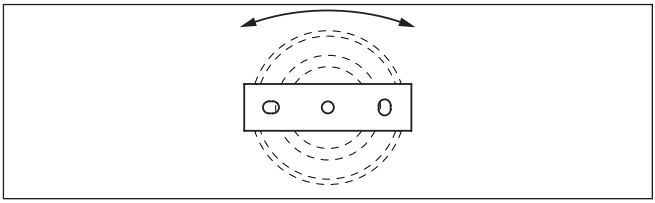

Fig. 8: Turning by fastening in the centre

4.4 Mounting versions, plastic horn antenna

Mounting strap

The optional mounting strap allows simple mounting of the instrument on a wall, ceiling or boom. Especially in the case of open vessels, this is a simple and effective way to align the sensor to the surface of the bulk solid material.

The following versions are available:

- Length 300 mm
- Length 170 mm

Mounting strap - Ceiling mounting

The instrument is normally mounted vertically with a bracket on the ceiling.

This allows swivelling the sensor up to 180° for optimal orientation and rotating for optimal connection.

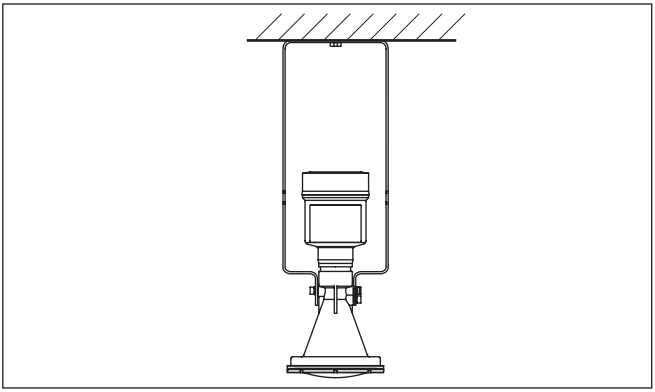

Fig. 9: Ceiling mounting via the mounting strap with length 300 mm

Mounting strap - Wall mounting

As an alternative the strap mounting is carried out horizontally or obliquely.

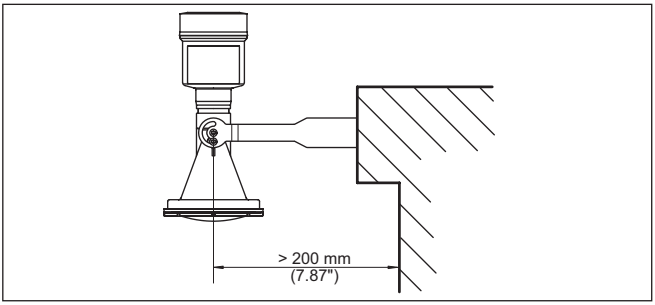

Fig. 10: Wall mounting horizontally via the mounting strap with length 170 mm

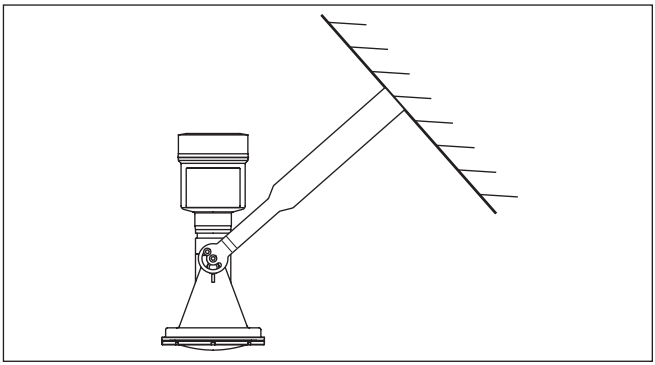

Fig. 11: Wall mounting with inclined wall via the mounting strap with length 300 mm

Flange

Two versions are available for mounting the instrument on a nozzle:

- Combi compression flange
- Adapter flange

Combi compression flange

The combi compression flange is suitable for different vessel flanges DN 80, ASME 3" and JIS 80. It comes not sealed against the radar sensor and can thus only be used unpressurized. It can be retrofitted on instruments with single chamber housing, retrofitting to a double chamber housing is not possible.

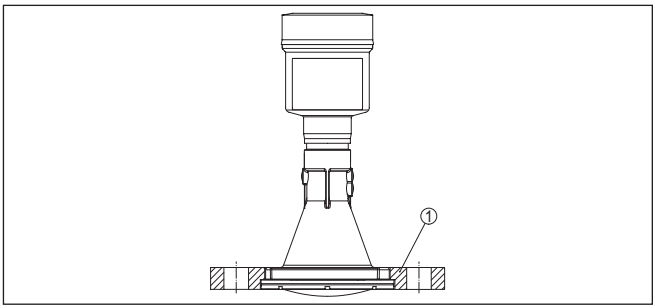

Fig. 12: Combi compression flange

1 Combi compression flange

Adapter flange

The adapter flange is available from DN 100, ASME 4" and JIS 100. It is permanently connected with the radar sensor and sealed.

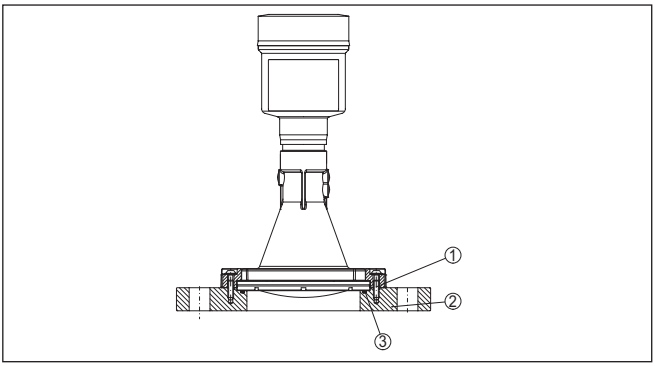

Fig. 13: Adapter flange

1 Connection screw
2 Adapter flange
3 Process seal

4.5 Mounting instructions

Polarisation

Radar sensors for level measurement emit electromagnetic waves. The polarization is the direction of the electrical component of these waves.

The polarization direction is marked by a nose on the housing, see following drawing:

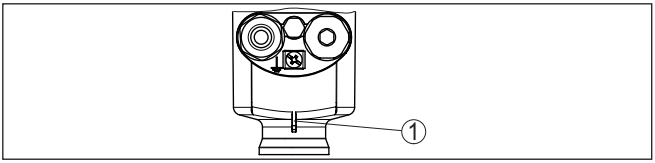

Fig. 14: Position of the polarisation

1 Nose for marking the direction of polarisation

Note:
Turning the housing changes the polarisation and thus the effect of false echoes on the measured value.

In order to avoid a change in the metrological properties, observe the position of the polarisation during installation or in the case of subsequent changes.

Mounting position - liquids

When mounting the device, keep a distance of at least 200 mm (7.874 in) from the vessel wall. If the device is installed in the center of dished or round vessel tops, multiple echoes can arise. However, these can be suppressed by an appropriate adjustment (see chapter " *Setup*").

If you cannot maintain this distance, you should carry out a false signal suppression during setup. This applies particularly if buildup on

the vessel wall is expected. In such cases, we recommend repeating the false signal suppression at a later date with existing buildup.

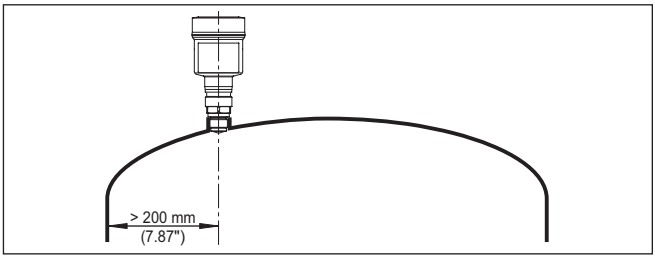

Fig. 15: Mounting of the radar sensor on round vessel tops

In vessels with conical bottom it can be advantageous to mount the device in the centre of the vessel, as measurement is then possible down to the bottom.

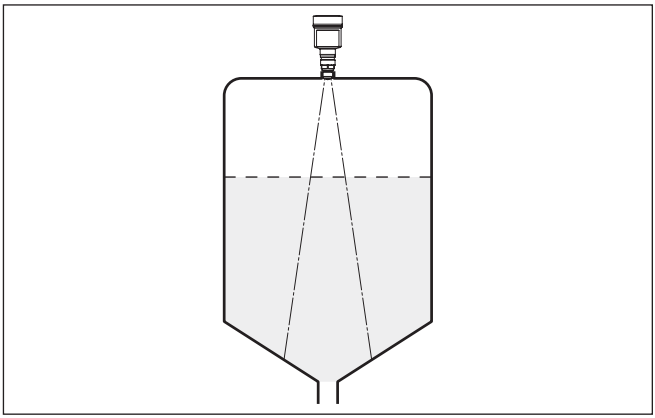

Fig. 16: Mounting of the radar sensor on vessels with conical bottom

Mounting position - bulk solids

Mount the instrument at least 200 mm (7.874 in) away from the vessel wall.

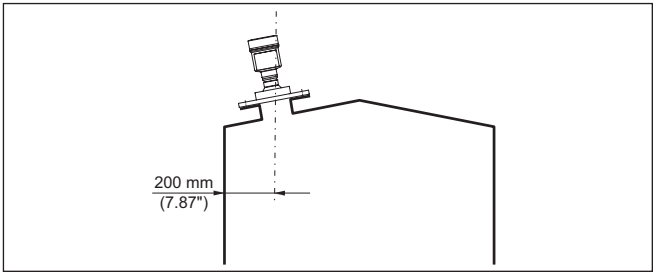

Fig. 17: Mounting the radar sensor on the vessel top

If you cannot maintain this distance, you should carry out a false signal suppression during setup. This applies particularly if buildup on

the vessel wall is expected. In such cases, we recommend repeating the false signal suppression at a later date with existing buildup.

Reference plane

The measuring range of VEGAPULS 6X begins physically at the end of the antenna. The min./max. adjustment, however, begins at the reference plane. The reference plane is different depending on the sensor version.

- **Plastic horn antenna:** The reference plane is the sealing surface on the lower edge
- **Thread with integrated antenna system:** The reference plane is the sealing surface at the bottom of the hexagon
- **Flange with plastic plating:** The reference plane is the lower side of the flange plating
- **Hygienic fitting:** The reference plane is the highest contact point between sensor process fitting and welded socket
- **Flange with lens antenna:** The reference plane is the lower side of the flange

The following graphic shows the position of the reference plane with different sensor versions.

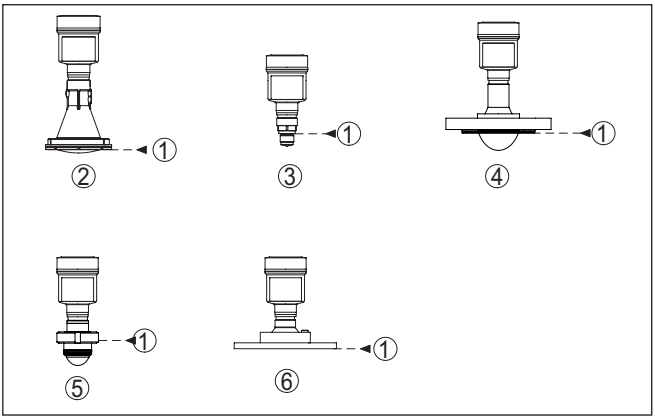

Fig. 18: Position of the reference plane

1 Reference plane
2 Plastic horn antenna
3 Threaded fittings
4 Flange connections
5 Hygienic fittings
6 Flange with lens antenna

Inflowing medium - liquids

Do not mount the instruments in or above the filling stream. Make sure that you detect the medium surface, not the inflowing product.

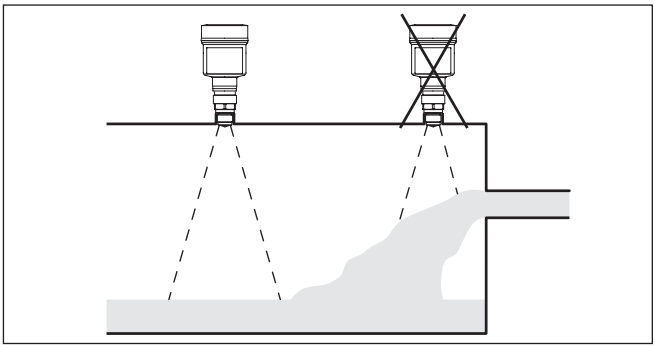

Fig. 19: Mounting of the radar sensor with inflowing medium

Inflowing medium - bulk solids

The instrument should not be mounted too close to the inflowing medium, as the radar signal could be disrupted.

Silo with filling from top

The optimal mounting position is opposite the filling aperture. To avoid heavy soiling, the distance to any filter or dust exhauster should be as large as possible.

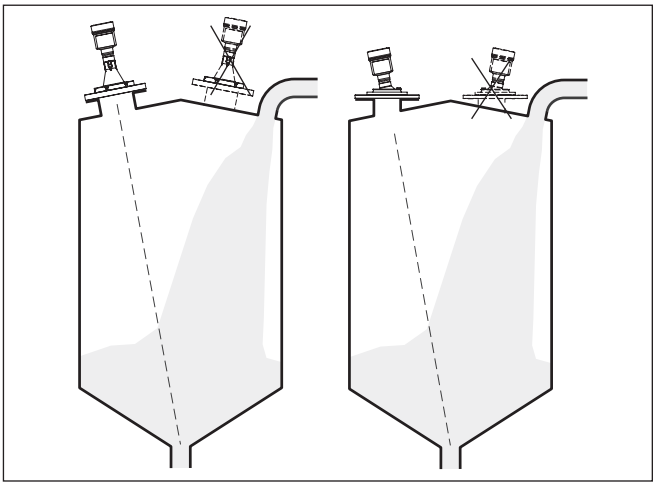

Fig. 20: Mounting of the radar sensor with inflowing medium

Silo with lateral filling

In bulk solids silos with lateral pneumatic filling the instrument should not be mounted above the filling stream, as the radar signal will be disrupted. The optimal mounting position is to the side of the filling aperture. To avoid heavy soiling, the distance to any filter or dust exhauster should be as large as possible.

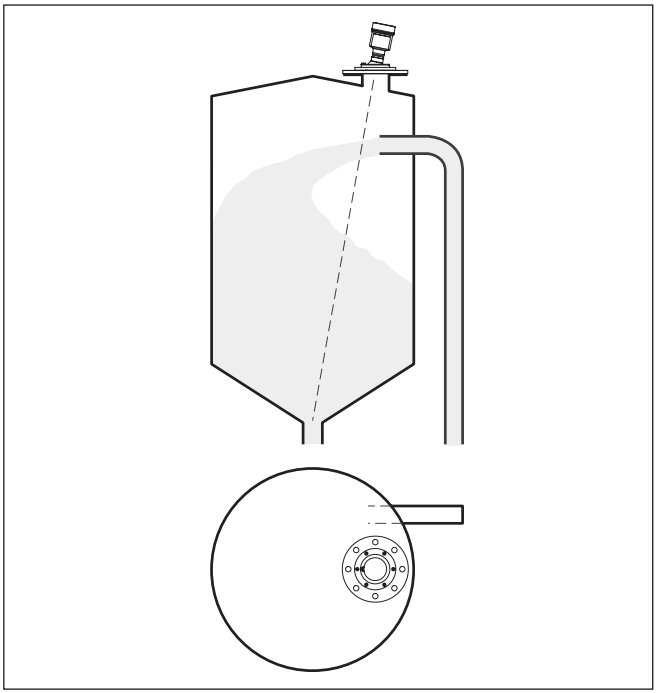

Fig. 21: Mounting of the radar sensor with inflowing medium

Nozzle

For nozzle mounting, the nozzle should be as short as possible and its end rounded. This reduces false reflections from the nozzle.

With threaded connection, the antenna end should protrude at least 5 mm (0.2 in) out of the nozzle.

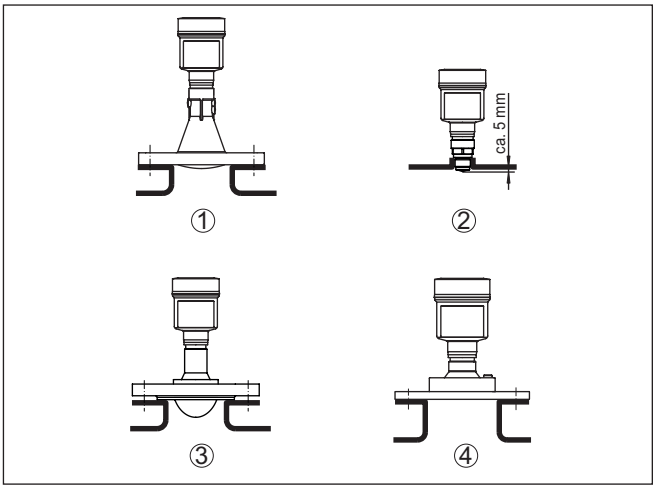

Fig. 22: Recommended socket mounting with different versions of VEGAPULS 6X

1 *Thread with integrated antenna system*
2 *Plastic horn antenna*
3 *Flange with plastic plating*
4 *Flange with lens antenna*

If the reflective properties of the medium are good, you can mount VEGAPULS 6X on sockets longer than the antenna. The socket end should be smooth and burr-free, if possible also rounded.

Note:
When mounting on longer nozzles, we recommend carrying out a false signal suppression (see chapter " *Parameter adjustment*").

You will find recommended values for socket heights in the following illustration or the tables. The values come from typical applications. Deviating from the proposed dimensions, also longer sockets are possible, however the local conditions must be taken into account.

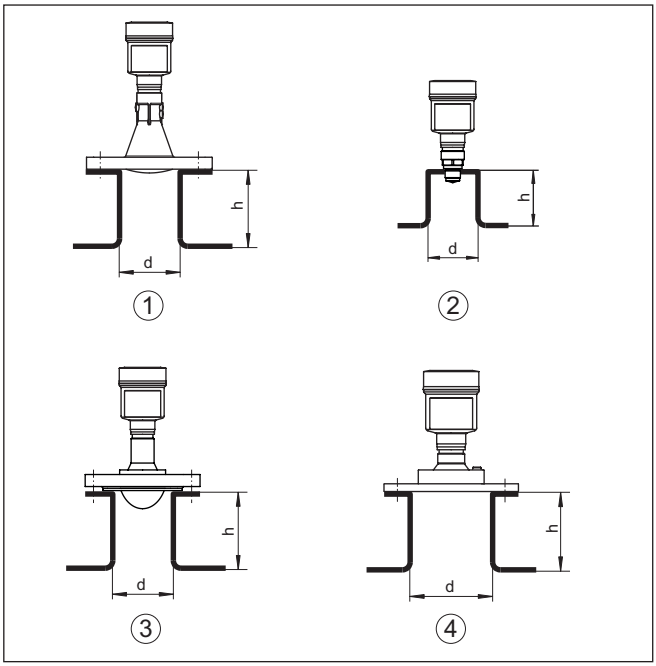

Fig. 23: Socket mounting with deviating socket dimensions with different versions of VEGAPULS 6X

1 Thread with integrated antenna system
2 Plastic horn antenna
3 Flange with plastic plating
4 Flange with lens antenna

Thread with integrated antenna system

Socket diameter d		Socket length h	
40 mm	1½"	≤ 150 mm	≤ 5.9 in
50 mm	2"	≤ 200 mm	≤ 7.9 in
80 mm	3"	≤ 300 mm	≤ 11.8 in
100 mm	4"	≤ 400 mm	≤ 15.8 in
150 mm	6"	≤ 600 mm	≤ 23.6 in

Plastic horn antenna

Socket diameter d		Socket length h	
80 mm	3"	≤ 400 mm	≤ 15.8 in
100 mm	4"	≤ 500 mm	≤ 19.7 in
150 mm	6"	≤ 800 mm	≤ 31.5 in

Flange with plastic plating

Socket diameter d		Socket length h	
50 mm	2"	≤ 200 mm	≤ 7.9 in
80 mm	3"	≤ 400 mm	≤ 15.8 in
100 mm	4"	≤ 500 mm	≤ 19.7 in
150 mm	6"	≤ 800 mm	≤ 31.5 in

Flange with lens antenna

Socket diameter d		Socket length h	
100 mm	4"	≤ 500 mm	≤ 19.7 in
150 mm	6"	≤ 800 mm	≤ 31.5 in

Sealing to the process

The VEGAPULS 6X with flange and encapsulated antenna system, the PTFE washer of the antenna encapsulation serves also as process seal.

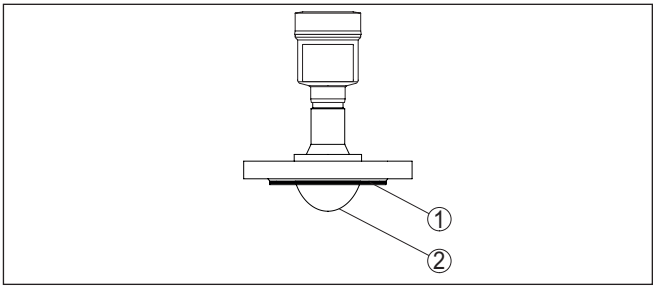

Fig. 24: VEGAPULS 6X with flange and encapsulated antenna system

1 PTFE washer
2 Antenna encapsulation

Note:
PTFE-plated flanges, however, have a preload loss over time with large temperature changes. This can negatively influence the sealing properties.

To avoid this, use disc springs during assembly. The disc springs suitable for the flange screws are included in the scope of delivery.

To seal effectively, the following requirements must be fulfilled:

1. Make sure the number of flange screws corresponds to the number of flange holes
2. Use of disc springs as previously described

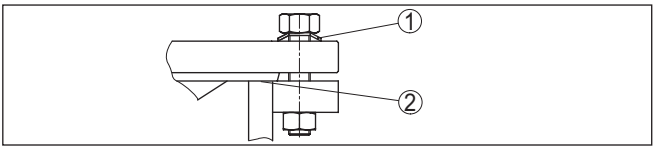

Fig. 25: Use of disc springs

1 Disc spring
2 Sealing surface

3. Tighten screws with the necessary torque (see chapter " *Technical data*", " *Torques*") [3]

Note:
To maintain the sealing properties of the antenna encapsulation against the process, we recommend retightening the screws at regular intervals depending on the process pressure and temperature.

For the recommended torque see chapter " *Technical data*", " *Torques*".

Exchange, flange plating

The PTFE washer can be exchanged by the user in case of wear or damage.

Proceed as follows while dismounting:

1. Dismount and clean the instrument, note chapters " *Dismounting steps*" and " *Maintenance*"
2. Unscrew and remove the PTFE disc by hand, protecting the thread against dirt.

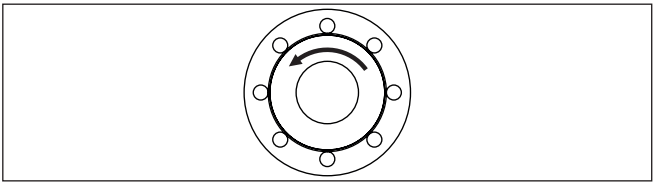

Fig. 26: VEGAPULS 6X - Loosening the PTFE washer

3. Remove the sealing and clean the sealing groove
4. Insert the supplied new sealing, place the PTFE washer onto the thread and tighten it manually
5. Mount the sensor, tighten the flange screws (torque see chapter " *Technical data*", " *Torques*")

Note:
To maintain the sealing properties of the antenna encapsulation against the process, we recommend retightening the screws at regular intervals depending on the process pressure and temperature.

[3] The torques specified in the technical data only apply to the plating shown here in the area of the sealing surface. For plating up to the outer diameter, the values are for orientation only; the torque values actually required are application-specific.

For the recommended torque see chapter " *Technical data*", " *Torques*".

Mounting, PTFE threaded adapter

PTFE threaded adapters are available for VEGAPULS 6X with thread G1½ or 1½ NPT. Due to this, only PTFE is in contact with the medium.

Mount the PTFE threaded adapter in the following way:

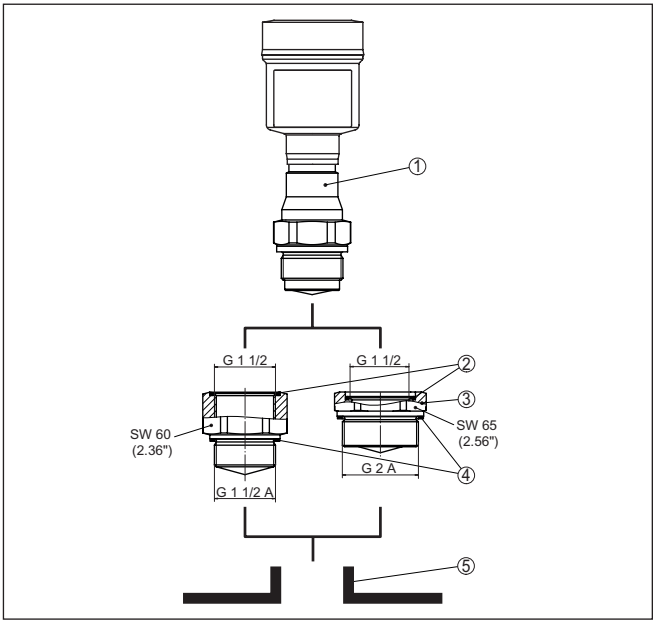

Fig. 27: VEGAPULS 6X with PTFE threaded adapter

1 *Sensor*
2 *O-ring seal (sensor side)*
3 *PTFE threaded adapter*
4 *Flat seal (process side)*
5 *Welded socket*

1. Remove existing Klingersil flat seal on the thread of VEGAPULS 6X
2. Insert the supplied O-ring seal (1) into the threaded adapter
3. Place the supplied flat seal (4) onto the thread of the adapter

Note:
For the threaded adapter in NPT version, there is no flat seal required on the process side.

4. Screw the threaded adapter on the hexagon into the welded socket. Torque see chapter " *Technical data*"
5. Screw VEGAPULS 6X on the hexagon into the threaded adapter. Torque see chapter " *Technical data*"

Mounting in the vessel insulation

Instruments for a temperature range up to 250 °C have a spacer for temperature decoupling between process fitting and electronics housing.

Note:
The temperature decoupling can become ineffective due to incorrect installation. Damage to the electronics can be the result.

Ensure effective temperature decoupling by including the spacer in the vessel insulation only up to max. 40 mm, see the following figure.

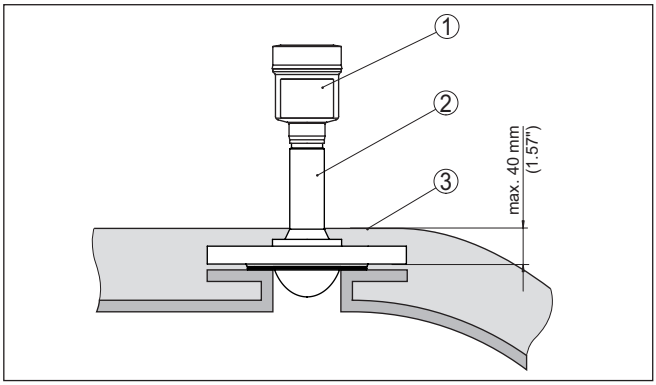

Fig. 28: Mounting the instrument on insulated vessels.

1 Electronics housing
2 Spacer
3 Vessel insulation

Note:
The temperature decoupling can become ineffective due to incorrect installation. Damage to the electronics can be the result.

Ensure effective temperature decoupling by including the spacer in the vessel insulation only up to max. 50 mm, see the following figure.

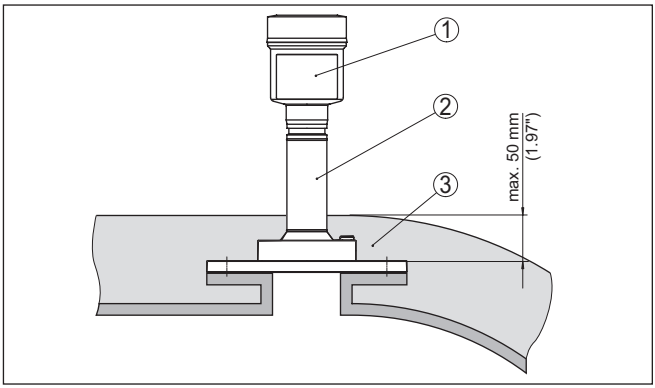

Fig. 29: Mounting the instrument on insulated vessels.

1 *Electronics housing*
2 *Spacer*
3 *Vessel insulation*

Vessel installations

The mounting location of the radar sensor should be a place where no other equipment or fixtures cross the path of the radar signals.

Vessel installations, such as e.g. ladders, limit switches, heating spirals, struts, etc., can cause false echoes and impair the useful echo. Make sure when planning your measuring point that the radar sensor has a " *clear view*" to the measured product.

In case of existing vessel installations, a false signal suppression should be carried out during setup.

If large vessel installations such as struts or supports cause false echoes, these can be attenuated through supplementary measures. Small, inclined sheet metal baffles above the installations " *scatter*" the radar signals and prevent direct interfering reflections.

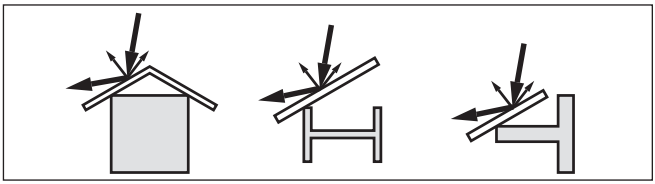

Fig. 30: Cover flat, large-area profiles with deflectors

Alignment - Liquids

In liquids, direct the device as perpendicular as possible to the medium surface to achieve optimum measurement results.

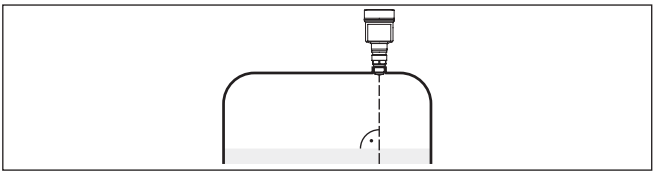

Fig. 31: Alignment in liquids

Orientation - Bulk solids

In a cylindrical silo with conical outlet, the mounting is carried out on a third up to the half of the vessel radius from outside (see following drawing).

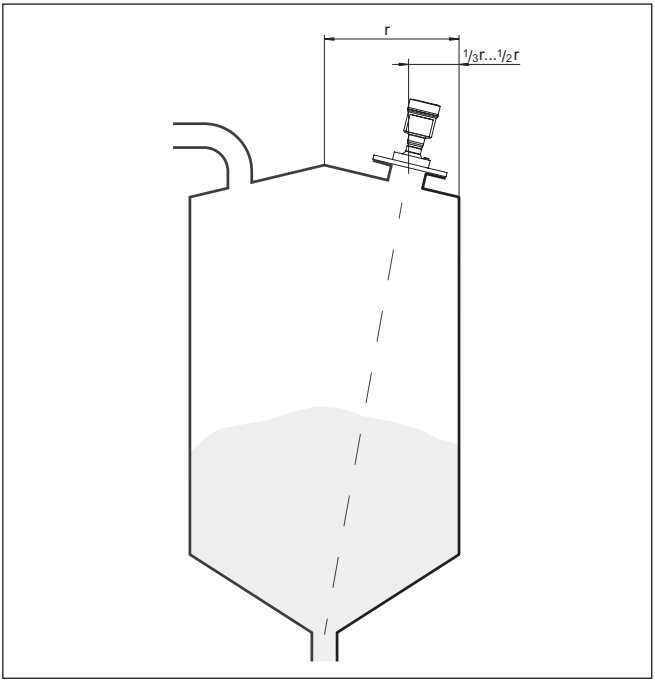

Fig. 32: Mounting position and orientation

Direct the device in such a way that the radar signal reaches the lowest vessel level. Hence it is possible to detect the complete vessel volume.

Tip:
The easiest way to align the device is with the optional swivelling holder. Determine the suitable inclination angle and check the alignment with the alignment aid in the VEGA Tools app on the device.

Alternatively, the angle of inclination can be determined using the following drawing and table. It depends on the measuring distance "d" and the distance "a" between vessel centre and mounting position.

Check the alignment with a suitable level or water level.

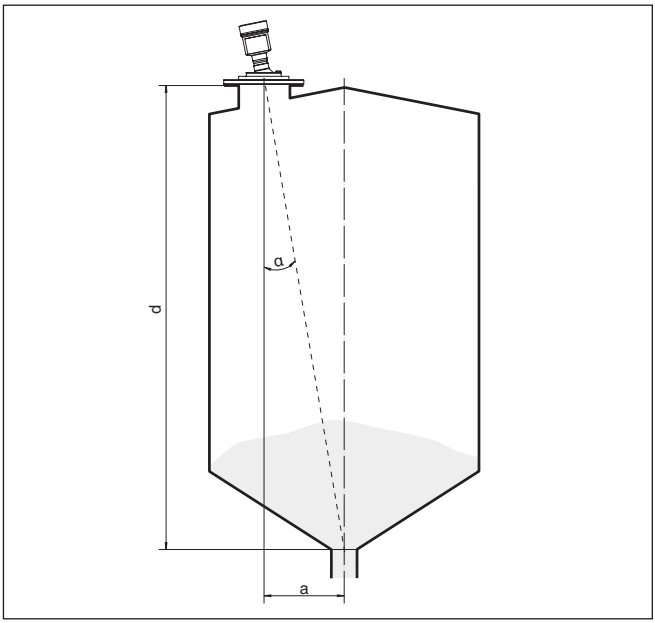

Fig. 33: Determination of the angle of inclination for alignment of VEGAPULS 6X

Distance d (m)	**2°**	**4°**	**6°**	**8°**	**10°**
2	0.1	0.1	0.2	0.3	0.4
4	0.1	0.3	0.4	0.6	0.7
6	0.2	0.4	0.6	0.8	1.1
8	0.3	0.6	0.8	1.1	1.4
10	0.3	0.7	1.1	1.4	1.8
15	0.5	1	1.6	2.1	2.6
20	0.7	1.4	2.1	2.8	3.5
25	0.9	1.7	2.6	3.5	4.4
30	1	2.1	3.2	4.2	5.3
35	1.2	2.4	3.7	4.9	6.2
40	1.4	2.8	4.2	5.6	7.1
45	1.6	3.1	4.7	6.3	7.9
50	1.7	3.5	5.3	7	8.8
60	2.1	4.2	6.3	8.4	10.5
70	2.4	4.9	7.3	9.7	12.2
80	2.8	5.6	8.4	11.1	13.9
90	3.1	6.3	9.4	12.5	15.6

Distance d (m)	2°	4°	6°	8°	10°
100	3.5	7	10.5	13.9	17.4
110	3.8	7.7	11.5	15.3	19.1
120	4.2	8.4	12.5	16.7	20.8

Example:
In a vessel 20 m high, the installation position of the device is 1.4 m from the vessel centre.

The necessary angle of inclination of 4° can be read out from this table.

Proceed as follows to adjust the angle of inclination with the swivelling holder:

1. Loosen the terminal screws of the swivel holder by one turn. Use a hexagon socket wrench, size 5.

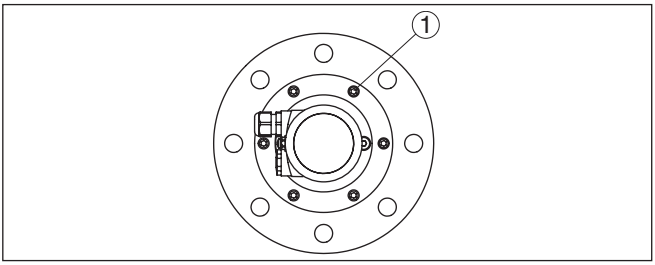

Fig. 34: VEGAPULS 6X with swivelling holder

1 Terminal screws (6 pieces)

2. Align the device, check angle of inclination

Note:
The max. angle of inclination of the swivelling holder is approx. 10°

3. Re-tighten the terminal screws, max. torque see chapter " *Technical data*".

Agitators

If there are agitators in the vessel, a false signal suppression should be carried out with the agitators in motion. This ensures that the interfering reflections from the agitators are saved with the blades in different positions.

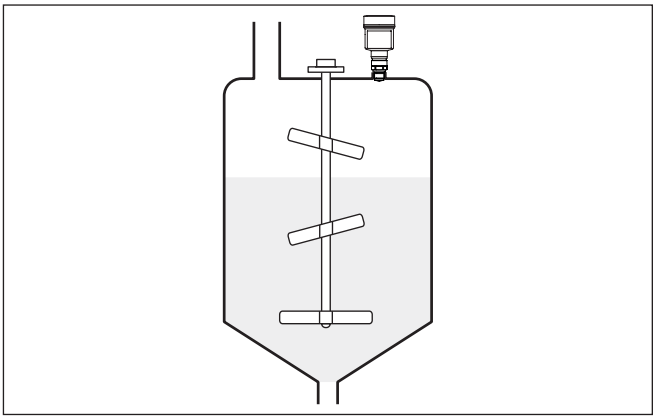

Fig. 35: Agitators

Foam generation

Through the action of filling, stirring and other processes in the vessel, compact foams which considerably damp the emitted signals may form on the medium surface.

If foams lead to measurement errors, you should use the biggest possible radar antennas or sensors with guided radar.

Material heaps

Large material heaps are best measured with several instruments, which can be mounted on e.g. traverse cranes. For this type of application it is advantageous to orient the sensor perpendicular to the bulk solid surface.

The sensors do not influence each other.

Information:
Keep in mind that for these applications, the sensors are designed for relatively slow level changes. If the sensor is used on a movable boom, the max. measuring rate must be observed (see chapter "*Technical data*").

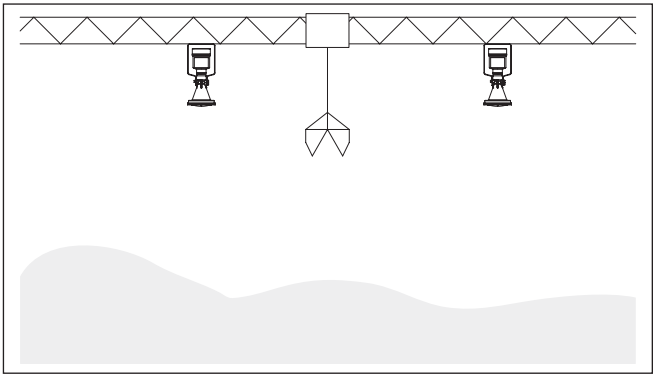

Fig. 36: Radar sensors on traverse crane

Mounting in multiple chamber silo

The walls of multiple-chamber silos are often made of profile material, e.g. profile sheeting, to ensure the required stability. If the radar sensor is mounted very close to a heavily structured vessel wall, substantial interfering reflections can be generated. Thus the sensor should be mounted at the largest possible distance from the separating wall.

The best mounting location is on the outer wall of the silo, with the sensor pointing towards the discharge opening in the silo centre. This can be accomplished, for example, with the mounting strap.

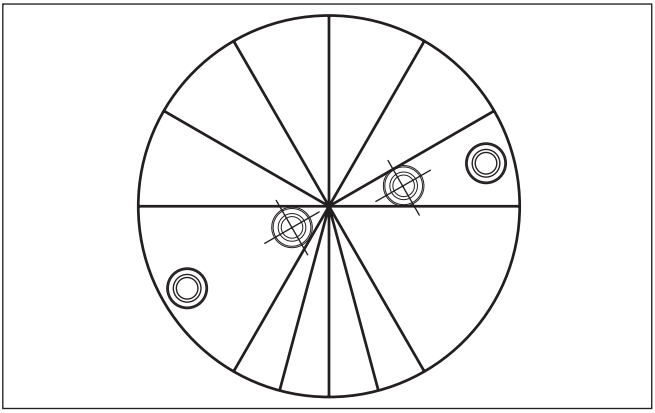

Fig. 37: Installation and orientation in multiple chamber silos

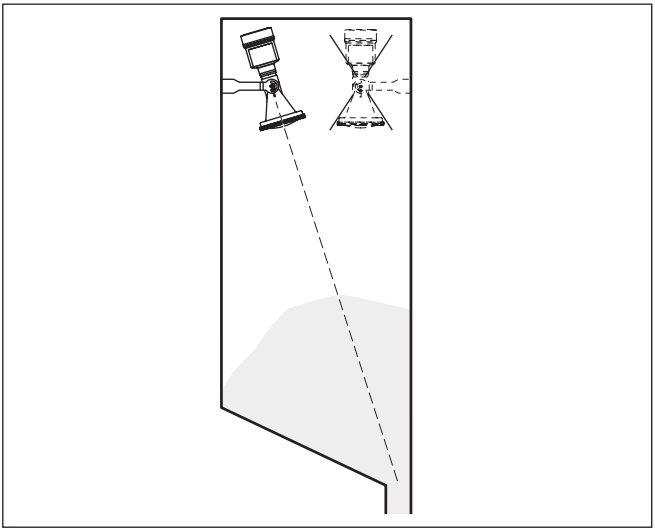

Fig. 38: Installation and orientation in multiple chamber silos

Dust deposits - Rinsing air connection

To avoid heavy buildup and dust on the antenna, the device should not be mounted close to the dust exhauster inside the vessel.

To protect the device against buildup, particularly in case of strong condensation, air rinsing is recommended.

Flange with lens antenna
The VEGAPULS 6X with metal-jacketed lens antenna is equipped with a rinsing air connection as a standard feature, see following graphics.

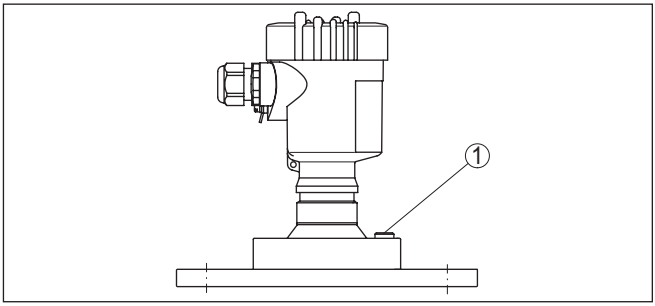

Fig. 39: Metal-jacketed lens antenna

1 Rinsing air connection

Plastic horn antenna
The VEGAPULS 6X with plastic horn antenna is optionally available with a rinsing air connection. The mechanical configuration differs according to the flange version, see following graphics.

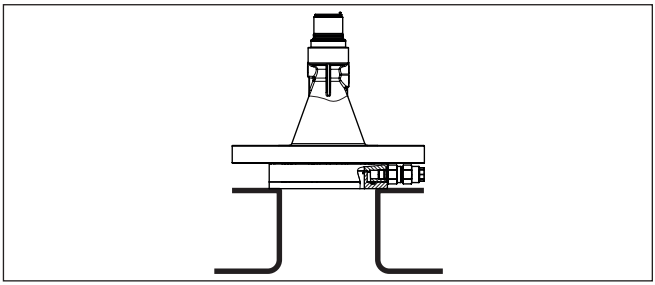

Fig. 40: Plastic horn antenna with compression flange

1 Rinsing air connection

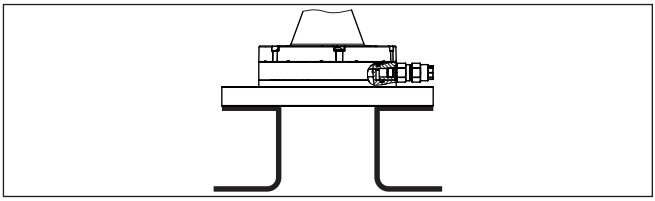

Fig. 41: Plastic horn antenna with adapter flange

1 Rinsing air connection

You can find details on the rinsing air connection in chapter " *Technical data*".

4.6 Measuring rigs - bypass

Measurement in the bypass tube

A bypass consists of a stand pipe with lateral process connections which can be mounted on the outside of a container as a communicating vessel.

The VEGAPULS 6X is suitable as a standard for non-contact level measurement in such a stand pipe.

A special application is available in the operator menu for stand pipe lengths > 3 m (9.842 ft).

Configuration bypass

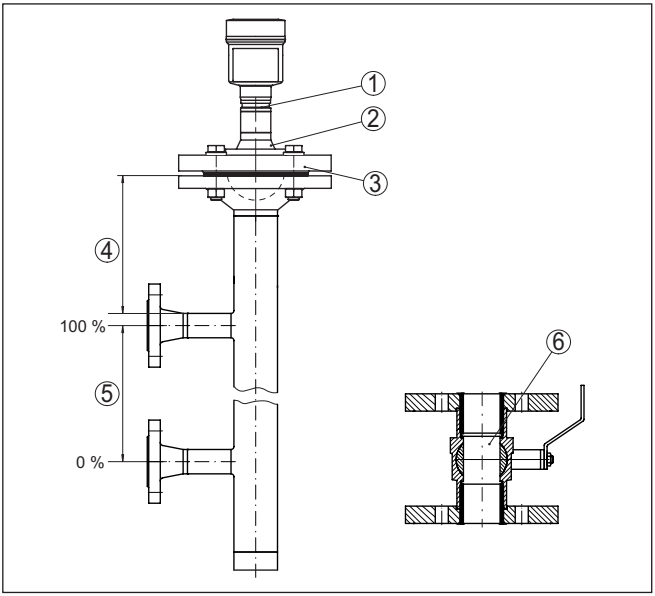

Fig. 42: Configuration bypass

1 *Radar sensor*
2 *Polarisation marking*
3 *Instrument flange*
4 *Distance sensor reference plane to upper tube connection*
5 *Distance of the tube connections*
6 *Ball valve with complete opening*

Instructions and requirements, bypass

Instructions of orientation of the polarisation:

- Note marking of the polarisation on the sensor
- With threaded versions, the marking is on the hexagon, with flange versions between two flange holes
- The marking must be in one plane with the tube connections to the vessel

Instructions for the measurement:

- The 100 % point may not be above the upper tube connection to the vessel
- The 0 % point may not be below the lower tube connection to the vessel

- Min. distance, sensor reference plane to upper edge of upper tube connection > 200 mm
- The antenna diameter of the sensor should correspond to the inner diameter of the tube
- For stand pipe lengths > 3 m the " *Application stand pipe > 3 m*" must be selected for the parametrisation
- For stand pipe lengths > 3 m, the antenna diameter must be chosen as large as possible, but at least 80 mm/3"
- A false signal suppression with the installed sensor is recommended but not mandatory
- The measurement through a ball valve with unrestricted channel is possible
- The deviation can increase in the area of the connecting tube to the container ± 200 mm

Constructional requirements on the bypass pipe:

- Material metal, smooth inner surface
- In case of an extremely rough tube inner surface, use an inserted tube (tube in tube) or a radar sensor with tube antenna
- Flanges are welded to the tube according to the orientation of the polarisation
- Gap size with junctions ≤ 1 mm, for example, when using a ball valve or intermediate flanges with single pipe sections
- Diameter should be constant over the complete length

4.7 Measurement setup - Flow

Mounting

In general, the following must be observed while mounting the device:

- Mounting the sensor on the upstream or inlet side
- Installation in the centre of the flume and vertical to the liquid surface
- Distance to the overfall orifice or Venturi flume
- Min. distance to the max. height of the orifice or flume for optimum accuracy: 250 mm (9.843 in) [4)]
- Requirements from approvals for flow measurement, e.g. MCERTS

Flume

Every flume generates a different level of backwater depending on its type and version. The specifications of the following flumes are available in the instrument:

Predefined curves

A flow measurement with these standard curves is very easy to set up, as no dimensional information of the flume is required.

- Palmer-Bowlus flume ($Q = k \times h^{1.86}$)
- Venturi, trapezoidal weir, rectangular flume ($Q = k \times h^{1.5}$)
- V-Notch, triangular overfall ($Q = k \times h^{2.5}$)

[4)] At smaller distances the measuring accuracy is reduced, see "Technical data".

Dimensions (ISO standard)
When selecting these curves, the dimensions of the flume must be known and entered via the assistant. As a result, the accuracy of the flow measurement is higher than with the specified curves.

- Rectangular flume (ISO 4359)
- Trapezoidal flume (ISO 4359)
- U-shaped flume (ISO 4359)
- Triangular overfall thin-walled (ISO 1438)
- Rectangular flume thin-walled (ISO 1438)
- Rectangular weir broad crown (ISO 3846)

Flow formula
If the flow formula of your flume is known, you should select this option, as the accuracy of the flow measurement is highest here.

- Flow formula: $Q = k \times h^{exp}$

Manufacturer definition
If you use a Parshall flume from the manufacturer ISCO, this option must be selected. This gives you a high accuracy of flow measurement with easy configuration.

Alternatively, you can also take over Q/h table values provided by the manufacturer here.

- ISCO-Parshall-Flume
- Q/h table (assignment of height with corresponding flow in a table)

Detailed project planning data can be found at the channel manufacturers and in the technical literature.

The following examples serve as an overview for flow measurement.

Rectangular overfall

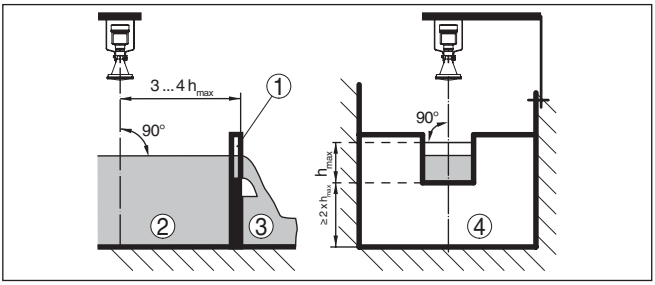

Fig. 43: Flow measurement with rectangular flume: $h_{max.}$ = max. filling of the rectangular flume

1 Overfall orifice (side view)
2 Upstream water
3 Tailwater
4 Overfall orifice (view from tailwater)

Khafagi-Venturi flume

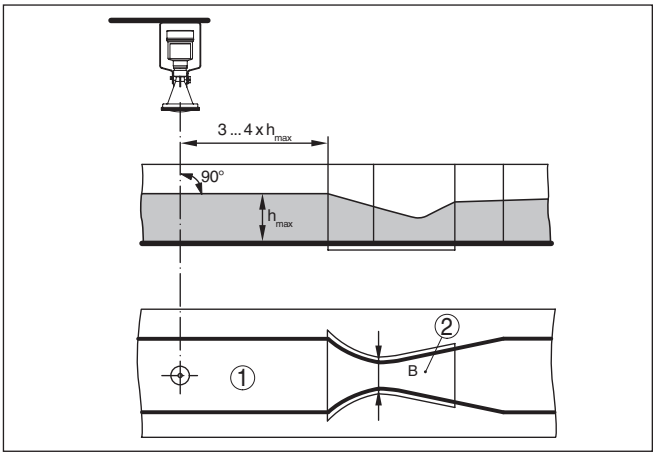

Fig. 44: Flow measurement with Khafagi-Venturi flume: $h_{max.}$ = max. filling of the flume; B = tightest constriction in the flume

1 Position sensor
2 Venturi flume

5 Connecting to power supply

5.1 Preparing the connection

Safety instructions

Always keep in mind the following safety instructions:

- Carry out electrical connection by trained, qualified personnel authorised by the plant operator
- If overvoltage surges are expected, overvoltage arresters should be installed

Warning:
Only connect or disconnect in de-energized state.

Voltage supply

The data for power supply are specified in chapter " *Technical data*".

Note:
Power the instrument via an energy-limited circuit (power max. 100 W) acc. to IEC 61010-1, e.g.

- Class 2 power supply unit (acc. to UL1310)
- SELV power supply unit (safety extra-low voltage) with suitable internal or external limitation of the output current

Keep in mind the following additional factors that influence the operating voltage:

- Lower output voltage of the power supply unit under nominal load (e.g. with a sensor current of 20.5 mA or 22 mA in case of fault signal)
- Influence of additional instruments in the circuit (see load values in chapter " *Technical data*")

Connection cable

The instrument is connected with standard two-wire cable without shielding. If electromagnetic interference is expected which is above the test values of EN 61326-1 for industrial areas, shielded cable should be used.

Use cable with round cross section for instruments with housing and cable gland. Use a cable gland suitable for the cable diameter to ensure the seal effect of the cable gland (IP protection rating).

Shielded cable generally necessary in HART multidrop mode.

Cable glands

Metric threads
In the case of instrument housings with metric thread, the cable glands are screwed in at the factory. They are sealed with plastic plugs as transport protection.

Note:
You have to remove these plugs before electrical connection.

NPT thread
In the case of instrument housings with self-sealing NPT threads, it is not possible to have the cable entries screwed in at the factory. The free openings for the cable glands are therefore covered with red dust protection caps as transport protection.

Note:
Prior to setup you have to replace these protective caps with approved cable glands or close the openings with suitable blind plugs.

On plastic housings, the NPT cable gland or the Conduit steel tube must be screwed into the threaded insert without grease.

Max. torque for all housings, see chapter " *Technical data*".

Cable screening and grounding

If shielded cable is required, the cable screening must be connected on both ends to ground potential. In the sensor, the cable screening is connected directly to the internal ground terminal. The ground terminal on the outside of the housing must be connected to the ground potential (low impedance).

In Ex systems, the grounding is carried out according to the installation regulations.

In electroplating plants as well as plants for cathodic corrosion protection it must be taken into account that significant potential differences exist. This can lead to unacceptably high currents in the cable screen if it is grounded at both ends.

Information:
The metallic parts of the instrument (process fitting, sensor, concentric tube, etc.) are connected with the internal and external ground terminal on the housing. This connection exists either directly via the conductive metallic parts or, in case of instruments with external electronics, via the screen of the special connection cable.

You can find specifications on the potential connections inside the instrument in chapter " *Technical data*".

5.2 Connecting

Connection technology

The voltage supply and signal output are connected via the spring-loaded terminals in the housing.

Connection to the display and adjustment module or to the interface adapter is carried out via contact pins in the housing.

Connection procedure

Proceed as follows:

1. Unscrew the housing lid
2. If a display and adjustment module is installed, remove it by turning it slightly to the left
3. Loosen compression nut of the cable gland and remove blind plug
4. Remove approx. 10 cm (4 in) of the cable mantle, strip approx. 1 cm (0.4 in) of insulation from the ends of the individual wires
5. Insert the cable into the sensor through the cable entry

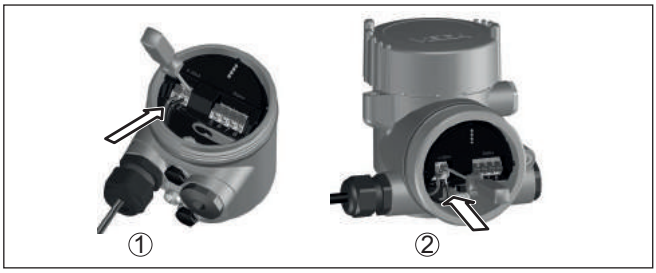

Fig. 45: Connection steps 5 and 6

1 Single chamber housing
2 Double chamber housing

6. Insert the wire ends into the terminals according to the wiring plan

Note:
Fixed conductors and flexible conductors with ferrules can be inserted directly into the terminal openings. In the case of flexible conductors for opening the terminals, use a screwdriver (3 mm blade width) to push the actuator lever away from the terminal opening. When released, the terminals are closed again.

7. Check the hold of the wires in the terminals by lightly pulling on them
8. Connect the shielding to the internal ground terminal, connect the external ground terminal to potential equalisation
9. Tighten the compression nut of the cable entry gland. The seal ring must completely encircle the cable
10. Reinsert the display and adjustment module, if one was installed
11. Screw the housing lid back on

The electrical connection is finished.

5.3 Wiring plan, single chamber housing

The following illustration applies to the non-Ex as well as to the Ex-ia version.

Electronics and connection compartment

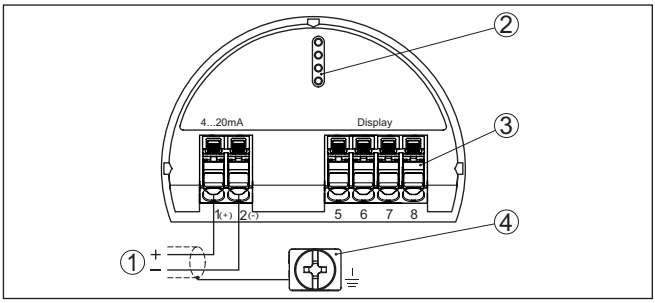

Fig. 46: Electronics and connection compartment - single chamber housing

1 *Voltage supply, signal output*
2 *For display and adjustment module or interface adapter*
3 *For external display and adjustment unit*
4 *Ground terminal for connection of the cable screening*

5.4 Wiring plan, double chamber housing

The following illustrations apply to the non-Ex as well as to the Ex-ia version.

Electronics compartment

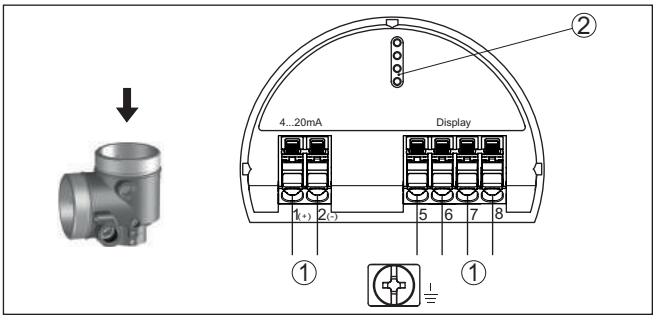

Fig. 47: Electronics compartment - double chamber housing

1 *Internal connection to the connection compartment*
2 *For display and adjustment module or interface adapter*

Connection compartment

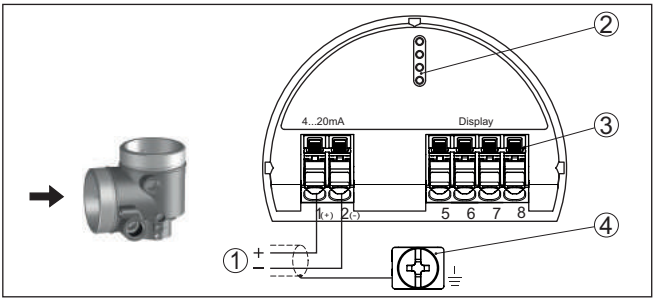

Fig. 48: Connection compartment - double chamber housing

1 *Voltage supply, signal output*
2 *For display and adjustment module or interface adapter*
3 *For external display and adjustment unit*
4 *Ground terminal for connection of the cable screening*

Supplementary electronics - Additional current output

To make a second measured value available for use, you can use the supplementary electronics " *Additional current output*".

Both current outputs are passive and need a power supply.

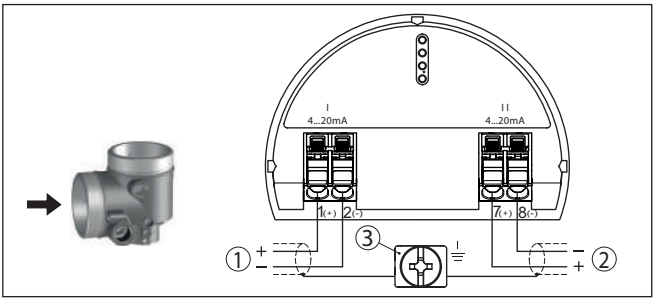

Fig. 49: Terminal compartment, double chamber housing, supplementary electronics " Additional current output"

1 *First current output (I) - Voltage supply and signal output, sensor (HART)*
2 *Additional current output (II) - Voltage supply and signal output (without HART)*
3 *Ground terminal for connection of the cable screening*

5.5 Wiring plan - version IP66/IP68, 1 bar

Wire assignment, connection cable

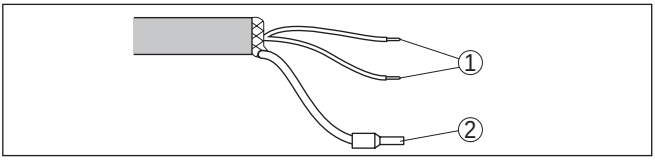

Fig. 50: Wire assignment in permanently connected connection cable

1 *Brown (+) and blue (-) to power supply or to the processing system*
2 *Shielding*

5.6 Switch-on phase

After connection to the power supply, the device carries out a self-test:

- Internal check of the electronics
- Output signal is set to failure

The current measured value is then output on the signal cable.

6 IT-Security and access protection

6.1 IT-Security

Overview

The VEGAPULS 6X was developed to meet the requirements for secure product development in accordance with IEC 62443-4-1 and is certified in accordance with IEC 62443-4-2. In order to ensure that the graduated security strategy of the device works as planned, the requirements from the VEGA " *Security Guidelines*" as well as the " *Component Requirements*" must be observed. Both documents are enclosed with the device.

The most important points are shown in the excerpts below.

Defense-in-Depth strategy

The Defense-in-Depth strategy of EN IEC 62443-4-1 represents a graduated security concept over several IT security levels for the device. It includes the system security, the network security as well as the security strategy of the system components.

Measures of the environment

System security
Monitor sensitive areas of your plant and allow access to components, networks and systems only to persons for whom this is absolutely necessary. Deactivate communication channels that are not required.

HART communication
Only leave this protocol active if the sensor is integrated into a zone with a protection level corresponding to SL-1 and when you can ensure that no unauthorised persons can gain access to the signal lines.

Operation with display and control devices
Make sure that these devices behave with your configuration without affecting the IT security. Only leave the Bluetooth function on during the parametrisation time. Bear in mind that the protection by sealing of the housing lid can be impaired by possible magnetic pen operation.

Measures for IT security

Planning
Plan your security needs carefully by conducting an application-specific risk assessment. Pay attention to possible legal and normative specifications.

Use application-specific solutions with a protection level appropriate to your security goals.

Installation and setup
Install the transmitter only in the intended IT security environment within a protected area, e.g. in a not publicly accessible plant. When setting up by Bluetooth, pay attention to the special features of this wireless connection, see chapter below. Secure the housing lid with the safety screw provided and seal it for protection against manipulation of the parameters and the device software. Alternatively, seal the lid with a security label.

Operation, maintenance, disposal
If damage to the seal or security label is visible, device data may have been manipulated. In this case, check the device settings. Make sure

that the device code is only accessible to persons who are authorised to make changes on the transmitter. The device should be reset to the factory settings for secure disposal.

IT security incidents
If you should detect weak points in our IT security functions, please report these to our PSIRT (Product Security Incident Response Team). See our homepage " www.vega.com/PSIRT" for details.

Security function by the device

Under observance of the application regulations, the device offers protection against data manipulation (violation of the integrity), Denial of Service (DoS; violation of availabnility) and espionage (violation of confidentiality).

It features the following security functions: User authentication, event memory (logging), software integrity checks, resource management and data backup for recovery.

6.2 Bluetooth radio interface

Devices with a Bluetooth radio interface are protected against unwanted access from outside. This means that only authorized persons can receive measured and status values and change device settings via this interface.

Bluetooth access code

A Bluetooth access code is required to establish Bluetooth communication via the adjustment tool (smartphone/tablet/notebook). This code must be entered once when Bluetooth communication is established for the first time in the adjustment tool. It is then stored in the adjustment tool and does not have to be entered again.

The Bluetooth access code is individual for each device. It is printed on the device housing and is also supplied with the device in the information sheet " *PINs and Codes*". It can be changed by the user after the first connection has been established. If the Bluetooth access code has not been entered correctly, a new entry can only be made after a waiting period has elapsed. The waiting time increases with each additional incorrect entry.

Emergency Bluetooth unlock code

The emergency Bluetooth access code enables Bluetooth communication to be established in the event that the Bluetooth access code is no longer known. It can't be changed. The emergency Bluetooth access code can be found in information sheet " *Access protection*". If this document is lost, the emergency Bluetooth access code can be retrieved from your personal contact person after legitimation. The storage and transmission of Bluetooth access codes is always encrypted (SHA 256 algorithm).

6.3 Protection of the parameterization

The settings (parameters) of the device can be protected against unwanted changes. The parameter protection is deactivated on delivery, all settings can be made.

Device code

To protect the parameterization, the device can be locked by the user with the aid of a freely selectable device code. The settings (parameters) can then only be read out, but not changed. The device code is also stored in the adjustment tool. However, unlike the Bluetooth access code, it must be re-entered for each unlock. When using the adjustment app or DTM, the stored device code is then suggested to the user for unlocking.

Emergency device code

The emergency device code allows unlocking the device in case the device code is no longer known. It can't be changed. The emergency device code can also be found on the supplied information sheet " *Access protection*". If this document is lost, the emergency device code can be retrieved from your personal contact person after legitimation. The storage and transmission of the device codes is always encrypted (SHA 256 algorithm).

6.4 Storing the codes in myVEGA

If the user has a " *myVEGA*" account, then the Bluetooth access code as well as the device code are additionally stored in his account under " *PINs and Codes*". This greatly simplifies the use of additional adjustment tools, as all Bluetooth access and device codes are automatically synchronized when connected to the " *myVEGA*" account

7 Set up with the display and adjustment module

7.1 Insert display and adjustment module

The display and adjustment module can be inserted into the sensor and removed again at any time. You can choose any one of four different positions - each displaced by 90°. It is not necessary to interrupt the power supply.

Proceed as follows:

1. Unscrew the housing lid
2. Place the display and adjustment module on the electronics in the desired position and turn it to the right until it snaps in.
3. Screw housing lid with inspection window tightly back on

Disassembly is carried out in reverse order.

The display and adjustment module is powered by the sensor, an additional connection is not necessary.

Fig. 51: Installing the display and adjustment module in the electronics compartment of the single chamber housing

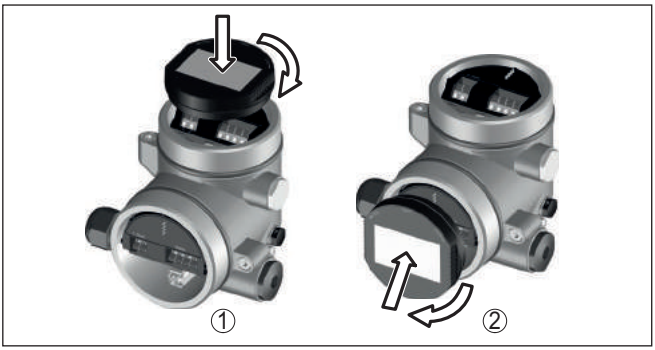

Fig. 52: Installing the display and adjustment module in the double chamber housing

1 In the electronics compartment
2 In the connection compartment

Note:
If you intend to retrofit the instrument with a display and adjustment module for continuous measured value indication, a higher lid with an inspection glass is required.

7.2 Adjustment system

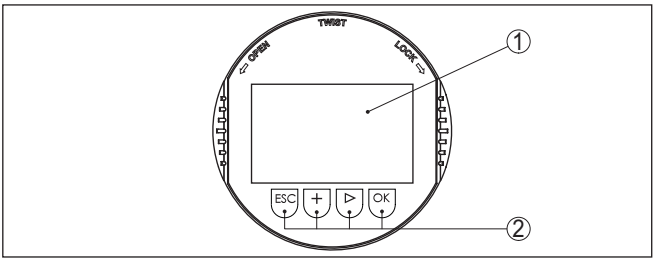

Fig. 53: Display and adjustment elements

1 LC display
2 Adjustment keys

Key functions

- ***[OK]*** key:
  - Move to the menu overview
  - Confirm selected menu
  - Edit parameter
  - Save value
- ***[->]*** key:
  - Change measured value presentation
  - Select list entry
  - Select menu items
  - Select editing position
- ***[+]*** key:
  - Change value of the parameter

- ***[ESC]*** key:
  - Interrupt input
  - Jump to next higher menu

Operating system - Keys direct

The instrument is operated via the four keys of the display and adjustment module. The individual menu items are shown on the LC display. You can find the function of the individual keys in the previous illustration.

Adjustment system - keys via magnetic pen

With the Bluetooth version of the display and adjustment module you can also adjust the instrument with the magnetic pen. The pen operates the four keys of the display and adjustment module right through the closed lid (with inspection window) of the sensor housing.

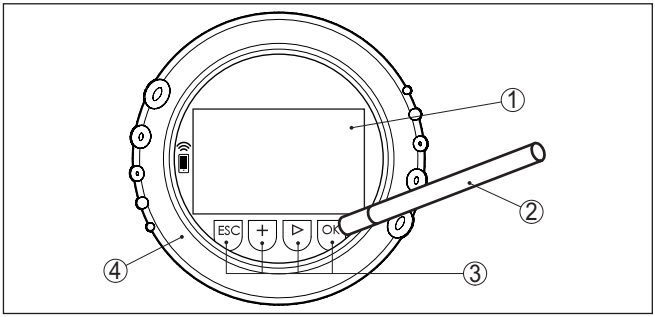

Fig. 54: Display and adjustment elements - with adjustment via magnetic pen

1 LC display
2 Magnetic pen
3 Adjustment keys
4 Lid with inspection window

Time functions

When the ***[+]*** and ***[->]*** keys are pressed quickly, the edited value, or the cursor, changes one value or position at a time. If the key is pressed longer than 1 s, the value or position changes continuously.

When the ***[OK]*** and ***[ESC]*** keys are pressed simultaneously for more than 5 s, the display returns to the main menu. The menu language is then switched over to " *English*".

Approx. 60 minutes after the last pressing of a key, an automatic reset to measured value indication is triggered. Any values not confirmed with ***[OK]*** will not be saved.

7.3 Measured value indication - Selection of national language

Measured value indication

With the ***[->]*** key you move between three different indication modes.

In the first view, the selected measured value is displayed in large digits.

In the second view, the selected measured value and a respective bargraph presentation are displayed.

In the third view, the selected measured value as well as a second selectable value, e.g. the temperature of the electronics, are displayed.

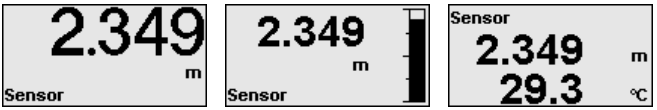

During the initial setup of an instrument shipped with factory settings, use the " ***OK***" key to get to the menu " *National language*".

Selection of national language

This menu item is used to select the national language for further parameter adjustment. You can change the selection via the menu item " *Setup - Display, Menu language*".

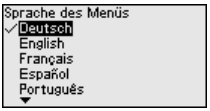

With the " ***OK***" key you move to the main menu.

7.4 Parameterization

7.4.1 Main menu

Lock/Unlock adjustment

In the menu item " *Lock/unlock adjustment*" you safeguard the sensor parameters against unauthorized or unintentional modifications.

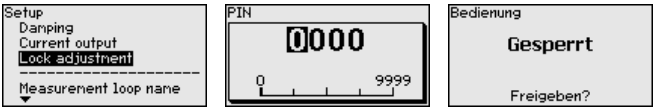

With active PIN, only the following adjustment functions are possible without entering a PIN:

- Select menu items and show data
- Read data from the sensor into the display and adjustment module

Releasing the sensor adjustment is also possible in any menu item by entering the PIN.

Caution:
With active PIN, adjustment via PACTware/DTM and other systems is also blocked.

Measurement loop name

Here you can assign a suitable measurement loop name. Push the " ***OK***" key to start the editing. With the " **+**" key you change the sign and with the " **->**" key you jump to the next position.

You can enter names with max. 19 characters. The character set comprises:

- Capital letters from A … Z
- Numbers from 0 … 9
- Special characters + - / _ blanks

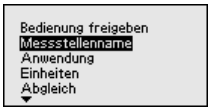

Application - Medium

This menu item enables you to adapt the sensor to the different measuring conditions of the media " *Liquid*" or " *Bulk solid*". This selection adapts the signal processing to the expected reflections.

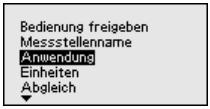

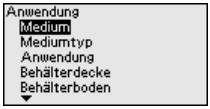

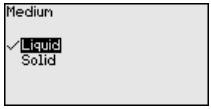

Application - Medium type

Every medium has a different reflection behaviour. With liquids, turbulent medium surfaces and foam formation are additional disturbing factors. In the case of bulk solids, these are dust formation, material cone and additional echoes through the vessel wall. Through this selection, the measuring characteristics of the sensor are matched to the type of medium.

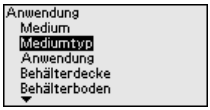

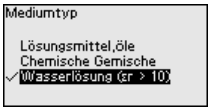

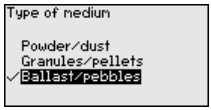

Application - Medium type liquid

With " *Liquid*", the applications are based on the following features, to which the measuring characteristic of the sensor is adjusted in particular:

Application	Vessel	Process/measurement conditions	Further recommendations
Storage tank	Large volume Upright cylindrical, horizontal round	Slow filling and emptying Smooth medium surface Multiple reflections from dished vessel ceiling Condensation	-
Stirrer vessel	Large agitator blades of metal Installations like flow breakers, heating spirals Nozzle	Frequent, fast to slow filling and emptying Strongly agitated surface, foam and strong vortex generation Multiple reflections through dished vessel ceiling Condensation, buildup on the sensor	False signal suppression with running agitator
Dosing vessel	Small vessels	Frequent and fast filling/emptying Tight installation situation Multiple reflections through dished vessel ceiling Product buildup, condensate and foam generation	-

66101-EN-211011

Application	Vessel	Process/measurement conditions	Further recommendations
Vessel/Collecting basin	Large volume Upright cylindrical or rectangular	Slow filling and emptying Smooth medium surface Condensation	-
Plastic tank (measurement through the vessel top)		Measurement through the tank top, if appropriate to the application Condensation on the plastic ceiling In outdoor facilities, water and snow on vessel top possible	False signal suppression when measuring through the tank top When measuring through the tank top in outdoor areas protective roof for the measuring point
Transportable plastic tank (IBC)	Small vessels	Material and thickness different Measurement through the vessel top, if appropriate to the application Changed reflection conditions as well as jumps in measured values when changing vessels	False signal suppression when measuring through the tank top When measuring through the tank top in outdoor areas protective roof for the measuring point
Gauge measurement in waters 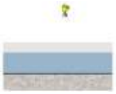		Slow gauge change Extreme damping of output signal in case of wave generation Ice and condensation on the antenna possible Floating debris sporadically on the water surface	-
Flow measurement flume/Overfall 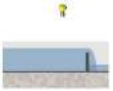		Slow gauge change Smooth to agitated water surface Measurement often from a short distance with the demand for accurate measurement results Ice and condensation on the antenna possible	-
Pumping station/ Pump shaft		Partly strongly agitated surface Installations such as pumps and ladders Multiple reflections through flat vessel ceiling Dirt and grease deposits on shaft wall and sensor Condensation on the sensor	False signal suppression

Application	Vessel	Process/measurement conditions	Further recommendations
Overflow basin (RÜB)	Large volume Partly installed underground	Partly strongly agitated surface Multiple reflections through flat vessel ceiling Condensation, dirt deposits on the sensor Flooding of the sensor antenna	-
Demonstration	Applications that are not typical level measurements, e.g. device tests	Instrument demonstration Object recognition/monitoring Fast position changes of a measuring plate during functional test	-

Application - Medium type bulk solids

With " *Bulk solid*", the applications are based on the following features, to which the measuring characteristic of the sensor is adjusted in particular:

Application	Vessel	Process/measurement conditions	Further recommendations
Silo	Slim and high Upright cylindrical	Interfering reflections due to weld seams on the vessel Multiple echoes/diffuse reflections due to unfavourable pouring positions with fine grain Varying pouring positions due to outlet funnel and filling cone	False signal suppression Alignment of the measurement to the silo outlet
Bunker	Large volume	Large distance to the medium Steep angles of repose, unfavourable pouring positions due to outlet funnel and filling cone Diffuse reflections due to structured vessel walls or internals Multiple echoes/diffuse reflections due to unfavourable pouring positions with fine grain Changing signal conditions when large amounts of material slip off	False signal suppression via adjustment app or DTM
Bunker fast filling		Large distance to the medium Fast level changes e. g. by truck filling Steep angles of repose, unfavourable pouring positions due to outlet funnel and filling cone Interfering reflections from fixtures or protective devices	False signal suppression via adjustment app or DTM

Application	Vessel	Process/measurement conditions	Further recommendations
Crusher		Measured value jumps and varying pouring positions, e.g. due to truck filling Fast reaction time Large distance to the medium Interfering reflections from fixtures or protective devices	False signal suppression via adjustment app or DTM
Heap	Large volume Upright cylindrical or rectangular	Measured value jumps, e.g. through heap profile and traverses Large angles of repose, varying pouring positions Measurement near the filling stream Sensor mounting on movable conveyor belts	-
Demonstration	Applications that are not typical level measurements, e.g. device tests	Instrument demonstration Object recognition/monitoring Measured value verification with higher measuring accuracy with reflection without bulk solids, e.g. via a measuring plate	-

Application - Vessel top, vessel bottom

Apart from the medium and the application, the vessel form itself can influence the measurement. To adapt the sensor to these measuring conditions, this menu item offers different options for vessel bottom and ceiling for certain applications.

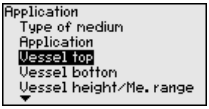

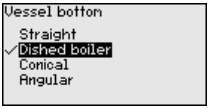

Application - Vessel height

Through this selection the operating range of the sensor is adapted to the vessel height, which considerably increases measurement reliability under different basic conditions.

The min. adjustment must be carried out independently of this.

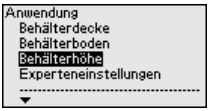

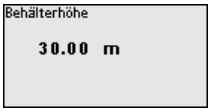

Units

In this menu item you select the distance unit and the temperature unit of the device.

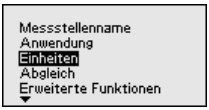

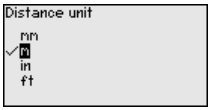

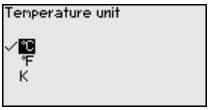

Adjustment

Since the radar sensor is a distance measuring instrument, it is the distance from the sensor to the medium surface that is measured. To

indicate the actual level, the measured distance must be assigned to a certain height percentage.

To perform the adjustment, enter the distance with full and empty vessel, see the following examples:

Liquids

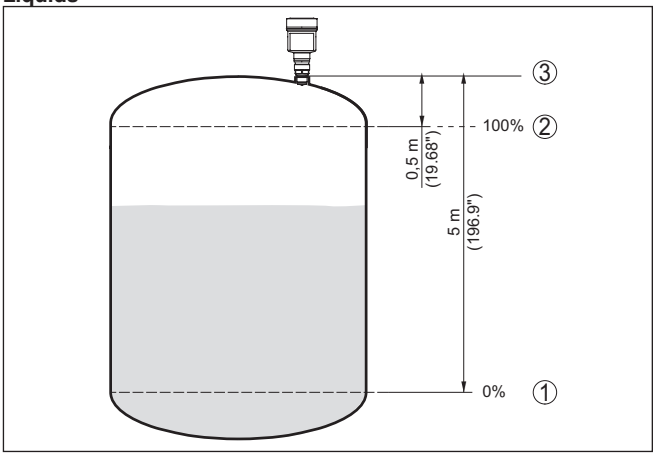

Fig. 55: Parameterisation example min./max. adjustment - liquids

1 Min. level = max. measuring distance
2 Max. level = min. measuring distance
3 Reference plane

Bulk solids

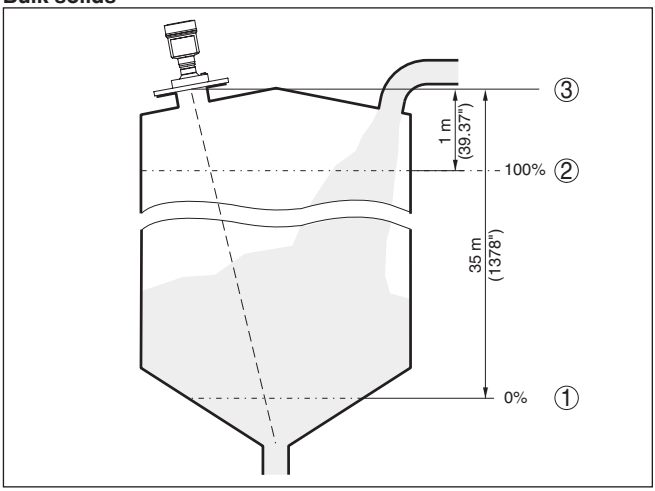

Fig. 56: Parameterisation example min./max. adjustment - bulk solids

1 Min. level = max. measuring distance
2 Max. level = min. measuring distance
3 Reference plane

If these values are not known, an adjustment with the distances of e.g. 10 % and 90 % is possible. Starting point for these distance specifications is always the sealing surface of the thread or flange. You can find specifications on the reference plane in chapter " *Technical data*". The actual level is calculated on the basis of these settings.

The actual product level during this adjustment is not important, because the min./max. adjustment is always carried out without changing the product level. These settings can be made ahead of time without the instrument having to be installed.

Max. adjustment

Proceed as follows:

1. Select with ***[->]*** the menu item Max. adjustment and confirm with ***[OK]***.

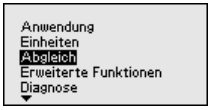

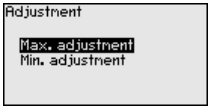

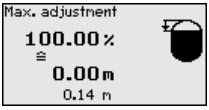

2. Prepare the percentage value for editing with ***[OK]*** and set the cursor to the requested position with ***[->]***.

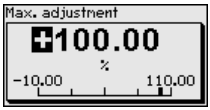

3. Set the requested percentage value with ***[+]*** and save with ***[OK]***. The cursor jumps now to the distance value.

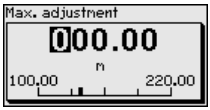

4. Enter the corresponding distance value in meters for the full vessel.
5. Save settings with ***[OK]*** and move with ***[ESC]*** and ***[->]*** to Min. adjustment.

Min. adjustment

Proceed as follows:

1. Select with ***[->]*** the menu item " *Min. adjustment*" and confirm with ***[OK]***.

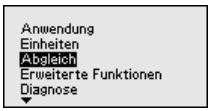

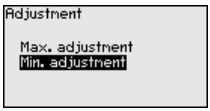

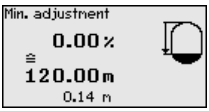

2. Edit the percentage value with ***[OK]*** and set the cursor to the requested position with ***[->]***.

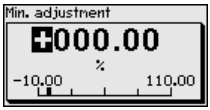

3. Set the requested percentage value with ***[+]*** and save with ***[OK]***. The cursor jumps now to the distance value.

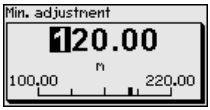

4. Enter the suitable distance value in m for empty vessel (e.g. distance from the sensor to the vessel bottom) corresponding to the percentage value.

Expert settings

In this menu item you gain access to the protected area where you can enter expert settings. In exceptional cases, individual parameters can be modified in order to adapt the sensor to special requirements.

Only change the expert settings after consultation with our service staff.

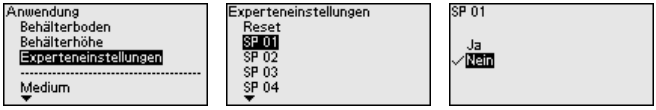

The expert settings can be reset to factory settings with " *Reset*".

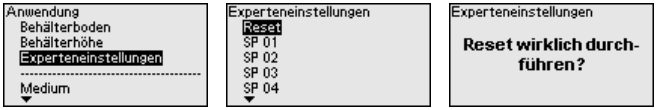

7.4.2 Extended functions

Damping

To damp process-dependent measured value fluctuations, set an integration time of 0 … 999 s in this menu item.

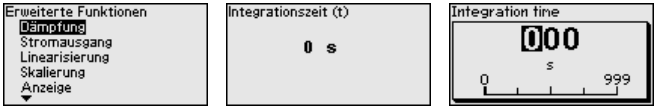

Current output - Output characteristics

In the menu item " *Current output - Output characteristics*" you set the output characteristics as rising 4 … 20 mA or as falling 20 … 4 mA.

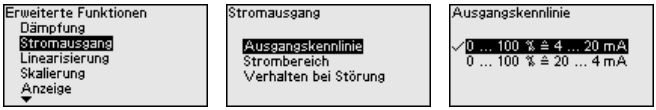

Current output - Current range

In the menu item " *Current output - Current range*" you set the range of the current output during operation as 4 … 20 mA or 3.8 … 20.5 mA.

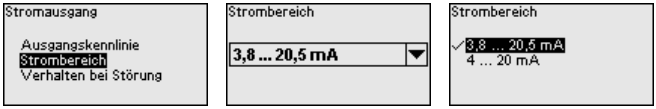

The default setting is min. current 3.8 mA and max. current 20.5 mA.

Current output - Reaction in case of fault

In the menu item " *Current output - Behaviour in case of failure*" you set the behaviour of the current output in case of failures as ≤ 3.6 mA or ≥ 21 mA.

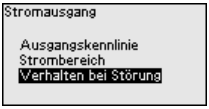

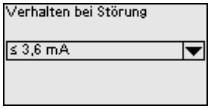

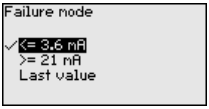

Current output 2

Output variable

In this menu item you define which measured value is output via the second current output:

- Percent
- Linearized percent
- Filling height
- Distance
- Scaled
- Measurement reliability
- Electronics temperature
- Measuring rate
- Operating voltage

Initial and final value - characteristics

In this menu item, the current value at which the output characteristic begins or ends is defined.

Output characteristic, current range, behaviour in case of failure

The function of these menu items corresponds to the description for the current output before.

Linearisation

A linearization is necessary for all vessels in which the vessel volume does not increase linearly with the level. Corresponding linearization curves are preprogrammed for these vessels. They represent the correlation between the level percentage and vessel volume. The linearization applies to the measured value indication and the current output. Depending on the medium and the vessel bottom, the intermediate height is also entered.

The linearisation applies to the measured value indication and the signal output.

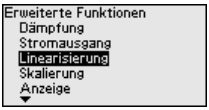

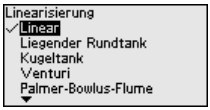

Scaling

In the menu item " *Scaling*" you define the scaling variable and unit as well as the scaling format for the indication of the level measured value for 0 % and 100 % on the display, for example as volume in l.

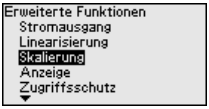

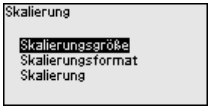

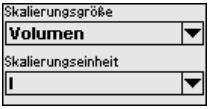

Display - Menu language

This menu item enables the setting of the requested national language.

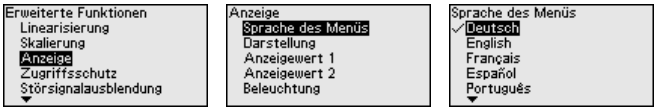

The following languages are available:

- German
- English
- French
- Spanish
- Portuguese
- Italian
- Dutch
- Russian
- Chinese
- Japanese
- Turkish

In the delivery status, the VEGAPULS 6X is set to the ordered national language.

Display - Presentation

With the ***[->]*** key you move between three different indication modes.

In the first view, the selected measured value is displayed in large digits.

In the second view, the selected measured value and a respective bargraph presentation are displayed.

In the third view, the selected measured value as well as a second selectable value, e.g. the temperature of the electronics, are displayed.

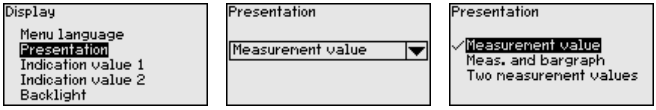

During the initial setup of an instrument shipped with factory settings, use the " ***OK***" key to get to the menu " *National language*".

Display - Displayed value 1, 2

In this menu item you can define the way measured values are indicated on the display.

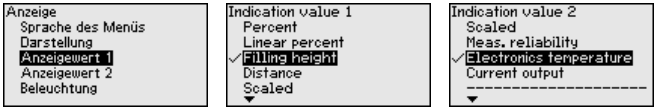

The default setting for the displayed value is " *Filling height*".

Display - Lighting

The display and adjustment module has a backlight for the display. In this menu item you can switch the lighting on or off. You can find the required operating voltage in chapter " *Technical data*".

To maintain the function of the device, the lighting is temporarily switched off if the power supply is insufficient.

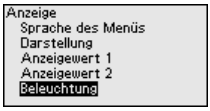

In delivery status, the lighting is switched on.

Access protection - Bluetooth access code

In this menu item, you can change the factory-preset Bluetooth access code to your personal Bluetooth access code.

Note:
You will find the individual factory Bluetooth access code of the device on the information sheet supplied " *PINs and Codes*".

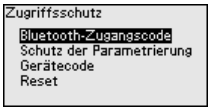

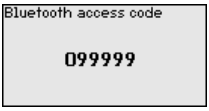

Access protection - Protection of the parameter adjustment

With this menu item you safeguard the sensor parameters against unauthorized or unintentional modifications.

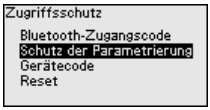

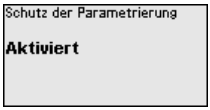

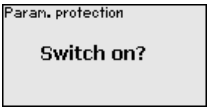

With activated protection of the parameter adjustment, the individual menu items can be selected and displayed, however the parameters can no longer be modified.

Releasing the sensor adjustment is also possible in any menu item by entering the device code.

Caution:
With protected parameter adjustment, adjustment via the adjustment app as well as PACTware/DTM and other systems is also blocked.

Access protection - Device code

You can change the device code in this menu item.

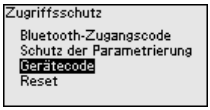

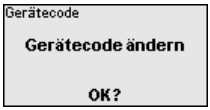

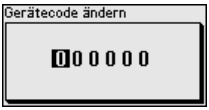

Caution:
The changed device code is also effective for adjustment by the adjustment app as well as PACTware/DTM and other systems

False signal suppression

The following circumstances cause interfering reflections and can influence the measurement:

- High mounting nozzles
- Vessel internals such as struts
- Agitators
- Buildup or welded joints on vessel walls

Note:
A false signal suppression detects, marks and saves these false signals to ensure that they are ignored in the level measurement.

This should be done with the lowest possible level so that all potential interfering reflections can be detected.

Proceed as follows:

1. Select with ***[->]*** the menu item " *False signal suppression*" and confirm with ***[OK]***.

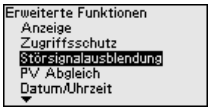

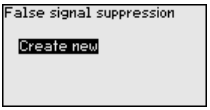

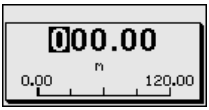

2. Confirm 3-times with ***[OK]*** and enter the actual distance from the sensor to the product surface.
3. All interfering signals in this range are detected by the sensor and stored after being confirmed with ***[OK]***.
4. All interfering signals in this range are detected by the sensor and stored after being confirmed with ***[OK]***.

Note:
Check the distance to the medium surface, because if an incorrect (too large) value is entered, the existing level will be saved as a false signal. The level would then no longer be detectable in this area.

If a false signal suppression has already been saved in the sensor, the following menu window appears when selecting " *False signal suppression*":

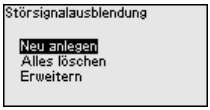

Delete all: An already created false signal suppression will be completely deleted. This is useful if the saved false signal suppression no longer matches the metrological conditions in the vessel.

Extend: is used to extend an already created false signal suppression. This is useful if a false signal suppression was carried out with too high a level and not all false signals could be detected. When selecting " *Extend*", the distance to the product surface of the created false signal suppression is displayed. This value can now be changed and the false signal suppression can be extended to this range.

PV adjustment

In this menu, you can assign one of the available measured values of the device to the current output and simultaneously to the HART Primary Value (PV) as an output variable:

- Percent
- Linearized percent
- Filling height
- Distance
- Scaled
- Measurement reliability

- Electronics temperature
- Measuring rate
- Operating voltage

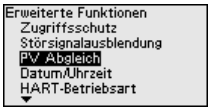

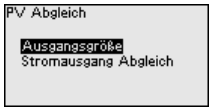

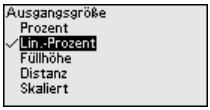

Furthermore, the adjustment of the current output is carried out here: initial value (e.g. 4 mA) or final value (e.g. 20 mA) of the output characteristic are assigned to 0 or 100 % of the PV.

Date/Time

In this menu item, the internal clock of the sensor is set to the requested time. At the time of shipment from factory, the instrument is set to CET (Central European Time).

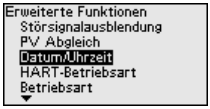

HART mode

In this menu item you specify the HART mode and enter the address for multidrop mode.

If you select 0 as the HART address, " *Analog current output*" is displayed in the menu item and a 4 … 20 mA signal is output.

If you select a HART address different to 0, " *Fixed current (4 mA)*" is displayed in the menu item and a fixed 4 mA signal is output regardless of the current level.

In the mode " *Fixed current*" up to 63 sensors can be operated on one two-wire cable (Multidrop operation). An address between 0 and 63 must be assigned to each sensor.

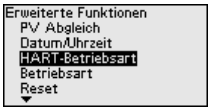

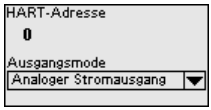

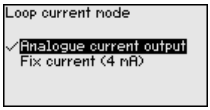

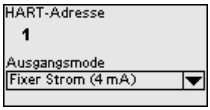

Mode

Mode

Country specific settings for the radar signals are determined via the operating mode.

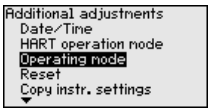

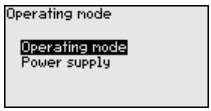

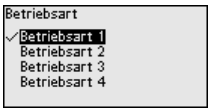

- Mode 1: EU, Albania, Andorra, Azerbaijan, Australia, Belarus, Bosnia and Herzegovina, Canada, Liechtenstein, Moldavia, Monaco, Montenegro, New Zealand, Northern Macedonia, Norway, San

Marino, Saudi Arabia, Serbia, Switzerland, Turkey, Ukraine, United Kingdom, USA
- Mode of operation 2: Brazil, Japan, South Korea, Taiwan, Thailand
- Mode of operation 3: India, Malaysia, South Africa
- Mode of operation 4: Russia, Kazakhstan

Depending on the operating mode, the metrological properties of the device can change (see chapter " *Technical data, input variable*").

Energy supply
The energy supply determines whether the sensor is permanently in operation or only for certain requirements.

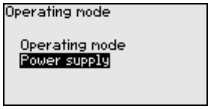

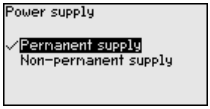

Reset

During a reset, parameter settings made by the user are reset to the values of the factory or basic settings (see chapter " *Menu overview*")

The language and Bluetooth access code are not reset; a currently running simulation is aborted.

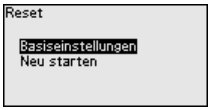

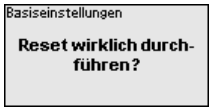

The following reset functions are available:

Reset - Factory settings
Restores the factory parameters settings as well as the order-specific settings at the time of delivery. A user-set measuring range is reset to the recommended measuring range, see chapter " *Technical data*". A created false signal suppression, freely programmed linearization curve as well as measured value and echo curve memories are cleared. The event and parameter changes memories are retained.

Reset - Basic settings
Resets the parameter settings to the default values of the respective device. You will find the values in chapter " *Menu overview*". Order-related settings are not saved to the current parameters after this reset. The event and parameter change memories are cleared.

The basic settings depend partly on the device version. An overview of the basic settings can be found in the chapter " *Menu overview*".

Reset - Restart
Is used to restart the device without switching off the supply voltage.

Caution:
For the duration of the reset, the device changes its behaviour from the normal measuring operation. Therefore, observe for downstream systems:

- The current output outputs the set false signal

- The Asset-Management function outputs the message " *Maintenance*" aus

Copy instrument settings

This function is used to copy device settings to the display and adjustment module. The following functions are available:

Copy from sensor
Store data from sensor in the display and adjustment module.

Copy to sensor
Store data from display and adjustment module back in the sensor

The following data or device settings are copied:

- Measurement loop name
- Application
- Units
- Adjustment
- Damping
- Current output
- Linearisation
- Special parameters
- Scaling
- Indication
- PV adjustment
- Mode
- Diagnostic behaviour

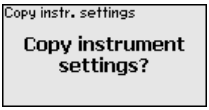

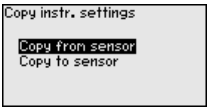

The copied data are permanently saved in an EEPROM memory in the display and adjustment module and remain there even in case of power failure. From there, they can be written into one or more sensors or kept as backup for a possible electronics exchange.

Note:
Before the data are saved in the sensor, a safety check is carried out to determine if the data match the sensor. In the process the sensor type of the source data as well as the target sensor are displayed. If the data do not match, a fault message is outputted or the function is blocked. The data are saved only after release.

7.4.3 Expert settings

SP01 - Activate start of measuring range limiting

A measuring range start limit is activated here. The appropriate distance value is set by the expert setting SP02.

This can prevent measured value jumps to a changing false signal in the close range. But the activation also means that the level echo will no longer be accepted in case of overfilling beyond the measuring range start and a measured value jump to a multiple echo takes place.

SP02 - Manual limiting of the measuring range start

Here, the measuring range start is limited individually independently of the 100 % adjustment. The entered value must always be smaller than the distance from the sensor reference point to the maximum level.

SP03 - Echo detection below the 0 % adjustment

This is an additional distance value that is added to the expert setting SP24 to reliably detect the zero point in case of insufficient reflections at the bottom of the vessel.

The echo detection below the 0 % adjustment should support the reliable detection of an echo in a totally empty vessel, e. g. when a vessel height is not entered exactly.

SP04 - Correction of the propagation speed

This parameter serves as a correction factor for correcting the propagation speed, e. g. in case of running time errors in standpipes or a higher dielelectric constant of the atmosphere in the vessel.

SP05/06 - Factor for noise averaging rising/falling

Noise averaging can be understood as a temporal, floating average value formation of all signals received by the sensor. The set factor determines the number of averaged echo curves as a Basis 2 exponent (example: factor 2 corresponds to the averaging of 2^2 [= 4] echo curves).

Sporadically occurring echos, e. g. by agitator blades or level echos with fluctuating amplitude, can be influenced by these factors.

A higher factor for noise averaging can lead to a longer reaction time or a measured value update.

SP07 - Deactivate filter function "Smooth raw value curve"

This parameter is always switched on ex-factory and acts as a digital filter over the raw value curve depending on the selected application.

It usually improves the measurement reliability. Therefore, it is advisable to only switch it off in very special application cases to be clarified.

SP08 - Offset detection curve for echo analysis

Only echoes which exceed the detection curve are detected and processed as echoes. This parameter reduces the sensitivity of the echo detection and signal analysis by increasing the dB value.

This affects the level echo to the same extent. Therefore, the application is only used with very strong false signals and simultaneously good reflection properties of the medium.

SP09 - Minimum measurement reliability for level echo selection

This parameter defines the minimum signal strength of a reflection signal necessary for signal detection and output as a level signal.

By entering a minimum measurement certainty as a dB value, false signals below this value are not accepted as a level echo.

SP10 - Additional reliability of false signal storage

The amplitude of the false signal suppression is increased by the entered dB value. This prevents such a false signal from being accepted as a level echo.

An increase is useful for very heavily fluctuating or amplitude-increasing false signals. It is advised against reducing the value of the default setting.

SP12 - Activate "Summarize echoes" function

This parameter serves to activate and select the summary function of two closely adjacent echo signals.

This helps to suppress measured value jumps resulting from material cones or emptying hoppers in bult material applications when filling and emptying.

SP13 - Amplitude difference in "Summarize echoes" function

The value entered here determines how great the maximum amplitude difference between two adjacent echoes may be in order to summarize them.

SP14 - Echo distance for "Summarize echoes" function

The value entered here determines how great the distance between the end of the first echo and the start of the second echo may be at the maximum in order for them to be summarized.

SP15 - Activate "First large echo" function

When this parameter is activated, the first echo not saved as a false echo with sufficiently great amplitude is selected as a product echo.

This is useful for very large multiple reflections by e. g. a round vessel lid.

SP16 - Minimum amplitude "First large echo"

The value entered here determines the maximum difference between the large reflection signal and the reflection signal of the medium so that this is evaluated as the first large echo and thus as the product echo.

SP17 - Wide focussing range

This parameter determines the measuring window width around the currently measured level echo in which fast distance changes of the reflections are possible.

Very fast level changes e. g. due to gushing wakes or sudden filling/emptying are then accepted within a limited range.

SP18 - Minimum measurement reliability outside focussing range

The value entered here determines the necessary measurement reliability (difference between echo amplitude and detection curve) for echoes outside the measuring window.

This is useful to obtain the measured value also in case of sporadic loss of the level signal, e. B. with foam generation.

SP19 - Time for opening the focussing range

This parameter determines the time until opening the measuring window when no more reflection is detectable within the focussing range. This may be the case e.g. with a level change without an evaluable reflection signal or with an echo outside the focussing range with a great useful echo probability.

As a result, on reaching this echo with high useful echo probability, this is evaluated as a useful echo and output as the current level.

SP22 - Measured value offset

The measured value offset enables adaptation of the factory set sensor reference plane to later fitted assembly devices such as adapter flanges, threaded adapters, etc.

A possible offset error is then compensated by this entry.

SP24 - Factor for additional reliability at the measuring range end

This factor is a percentage, additional reliability below the 0% adjustment related to the measuring range end.

It is entered to reliably detect the zero point in case of inadequate reflections at the bottom of the vessel.

SP HART - HART signal

This parameter serves to activate/deaxctivate the HART signal in the output.

7.4.4 Diagnostics

Device status

This menu item displays the device status and the change counter for parameter changes.

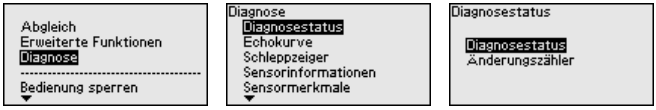

Curve display

The " *Echo curve*" shows the signal strength of the echoes over the measuring range in dB. The signal strength enables an evaluation of the quality of the measurement.

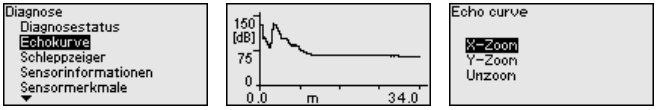

The selected curve is continuously updated. A submenu with zoom functions is opened with the ***[OK]*** key:

- "X-Zoom": Zoom function for the meas. distance
- "Y-Zoom": 1, 2, 5 and 10x signal magnification in " *dB*"
- "Unzoom": Reset the presentation to the nominal measuring range without magnification

Peak value indicator

The sensor saves the following min./max. values.

- Distance
- Measurement reliability
- Measuring rate
- Electronics temperature
- Operating voltage

These values are displayed in the " *Pointer function* menu item.

The ***[OK]*** key opens a reset function in the respective pointer function window:

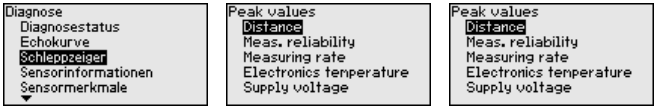

With the ***[OK]*** key, the peak values are reset to the actual measured value.

Sensor information

In this menu item the following information of the instrument can be read out:

- Instrument name and serial number
- Hardware and software version
- Device Revision
- Date of the factory calibration

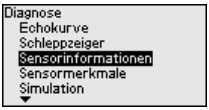

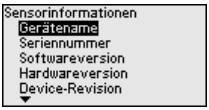

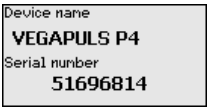

Sensor characteristics

The menu item " *Sensor characteristics*" delivers sensor characteristics such as approval, process fitting, seal, measuring range etc.

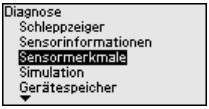

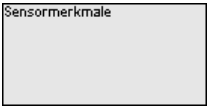

Simulation

In this menu item you can simulate measured values via the current output. This allows the signal path to be tested, e.g. through downstream indicating instruments or the input card of the control system.

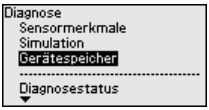

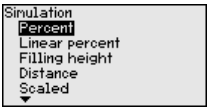

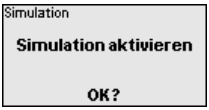

Select the requested simulation variable and set the requested value.

Caution:
During simulation, the simulated value is output as 4 … 20 mA current value and as digital HART signal. The status message within the context of the asset management function is " *Maintenance*".

Information:
The sensor terminates the simulation automatically after 60 minutes.

To deactivate the simulation manually in advance, you have to push the ***[ESC]*** key and confirm the message

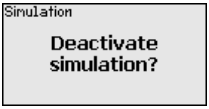

with the ***[OK]*** key.

Device memory

The function " *Echo curve of the setup*" allows the echo curve to be saved at the time of setup.

Information:
This is generally recommended, however, for use of the Asset Management functions it is absolutely necessary. Saving should be carried out with a very low level.

The function " *Echo curve memory*" allows up to ten individual echo curves to be stored, for example to detect the measurement behaviour of the sensor in different operating conditions.

With the adjustment software PACTware and the PC, the stored echo curves can be displayed with high resolution and used to recognize signal changes over time. In addition, the echo curve saved during setup can also be displayed in the echo curve window and compared with the current echo curve.

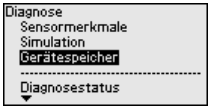

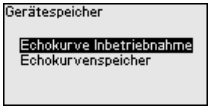

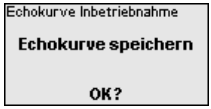

7.5 Saving the parameterisation data

On paper

We recommended writing down the adjustment data, e.g. in this operating instructions manual, and archiving them afterwards. They are thus available for multiple use or service purposes.

In the display and adjustment module

If the instrument is equipped with a display and adjustment module, the parameter adjustment data can be saved therein. The procedure is described in menu item " *Copy device settings*".

8 Setup with PACTware

8.1 Connect the PC

Via the interface adapter directly on the sensor

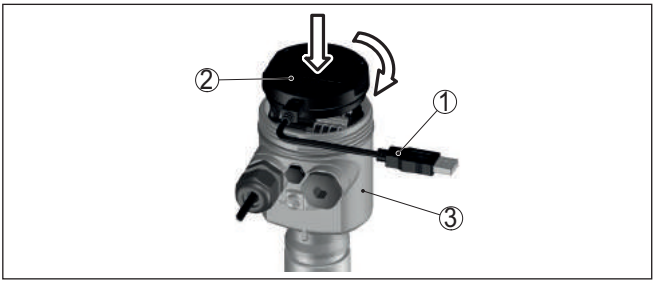

Fig. 57: Connection of the PC directly to the sensor via the interface adapter

1 *USB cable to the PC*
2 *Interface adapter VEGACONNECT*
3 *Sensor*

Via the interface adapter and HART

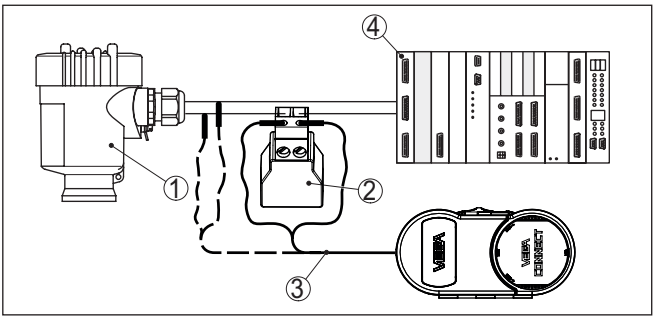

Fig. 58: Connecting the PC via HART to the signal cable

1 *Sensor*
2 *HART resistance 250 Ω (optional depending on evaluation)*
3 *Connection cable with 2 mm pins and terminals*
4 *Processing system/PLC/Voltage supply*
5 *Interface adapter, for example VEGACONNECT 4*

Note:
With power supply units with integrated HART resistance (internal resistance approx. 250 Ω), an additional external resistance is not necessary. This applies, e.g. to the VEGA instruments VEGATRENN 149A, VEGAMET 381, VEGAMET 391. Common Ex separators are also usually equipped with a sufficient current limiting resistance. In such cases, the interface adapter can be connected parallel to the 4 … 20 mA cable (dashed line in the previous illustration).

8.2 Parameter adjustment with PACTware

Prerequisites

For parameter adjustment of the instrument via a Windows PC, the configuration software PACTware and a suitable instrument driver

(DTM) according to FDT standard are required. The latest PACTware version as well as all available DTMs are compiled in a DTM Collection. The DTMs can also be integrated into other frame applications according to FDT standard.

Note:
To ensure that all instrument functions are supported, you should always use the latest DTM Collection. Furthermore, not all described functions are included in older firmware versions. You can download the latest instrument software from our homepage. A description of the update procedure is also available in the Internet.

Further setup steps are described in the operating instructions manual " *DTM Collection/PACTware*" attached to each DTM Collection and which can also be downloaded from the Internet. Detailed descriptions are available in the online help of PACTware and the DTMs.

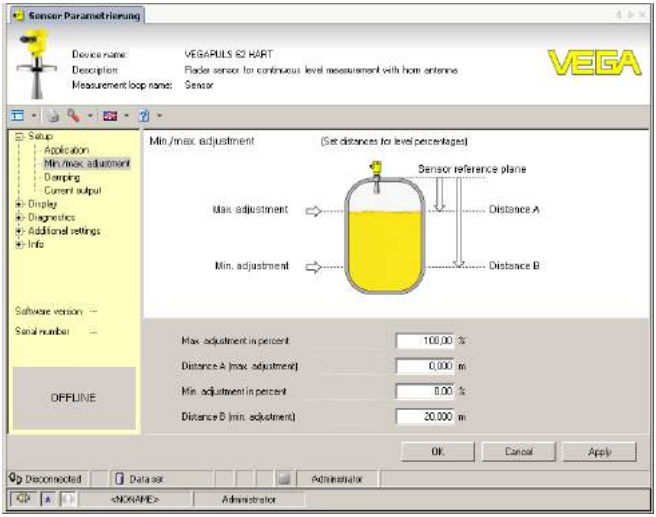

Fig. 59: Example of a DTM view

Standard/Full version

All device DTMs are available as a free-of-charge standard version and as a full version that must be purchased. In the standard version, all functions for complete setup are already included. An assistant for simple project configuration simplifies the adjustment considerably. Saving/printing the project as well as import/export functions are also part of the standard version.

In the full version there is also an extended print function for complete project documentation as well as a save function for measured value and echo curves. In addition, there is a tank calculation program as well as a multiviewer for display and analysis of the saved measured value and echo curves.

The standard version is available as a download under www.vega.com/downloads and " *Software*". The full version is available on CD from the agency serving you.

8.3 Saving the parameterisation data

We recommend documenting or saving the parameterisation data via PACTware. That way the data are available for multiple use or service purposes.

9 Menu overview

9.1 Display and adjustment unit (on site)

Main menu

Menu item	Parameter	Selection	Basic setting
Lock/Unlock adjustment (SIL)		Lock, unlock	Released
Measurement loop name			Sensor
Application (SIL)	Medium	Liquid	Liquid [5]
		Bulk solid	Bulk solid [6]
	Medium type - Liquid	Solvents/Liquid gases/Oils (DK value < 3)	Chemical mixtures (DK value 3 … 10)
		Chemical mixtures (DK value 3 … 10)	
		Water solution/Acids/Alkalis (DK value > 10)	
	Medium type - bulk solid	Powder, dust (granulation < 1 mm)	Granules, pellets (granulation 1 … 10 mm)
		Granules, pellets (granulation 1 … 10 mm)	
		Crushed stones, pebbles, debris (granulation > 10 mm)	
	Application - liquid	Storage tank, agitator tank, dosing tank, pumping station/pump shaft, rain overflow basin, tank/collection basin, plastic tank (measurement through tank top), mobile plastic tank (IBC), level measurement in waters, flow measurement flume/overflow, pump station/pump shaft, combined sewer overflow, demonstration	Storage tank [7]
	Application - bulk solid	Silo, bunker, crusher, heap, demonstration	Silo [8]
	Tube inner diameter	Tube inner diameter	-
	Vessel top	Flat, dished form	Flat
	Vessel bottom	Flat, dished form, conical, inclined	Flat
	Vessel height		
	Expert settings	See separate table below	
Units	Distance unit	mm, m, in, ft	m
	Temperature unit	°C, °F, K	°C

[5] Plastic horn antenna, thread with integrated antenna system, flange with plastic plating
[6] Flange with lens antenna
[7] Plastic horn antenna, thread with integrated antenna system, flange with plastic plating
[8] Flange with lens antenna

Menu item	Parameter	Selection	Basic setting
Adjustment (SIL)		Max. adjustment (distance A) Min. adjustment (distance B)	Max. adjustment 100 % corresponds to 0,000 m Min. adjustment 0 % corresponds to 120,000 m
Extended functions	See separate tables		
Diagnostics			

Extended functions

Menu item	Parameter	Selection	Basic setting
Damping	Integration time	0 … 999 s	1 s
Current output	Output characteristics	0 … 100 % correspond to 4 … 20 mA	0 … 100 % correspond to 4 … 20 mA
		0 … 100 % correspond to 20 … 4 mA	
	Current range	4 … 20 mA	4 … 20 mA
		3.8 … 20.5 mA	
	Reaction when malfunctions occur	≤ 3.6 mA, ≥ 21 mA, last valid measured value	≤ 3.6 mA
Current output 2	Output variable	Percent, linearized percent, filling height, distance, scaled, measurement reliability, electronics temperature, meas. rate, supply voltage	Percent
	Current output, adjustment	Initial value - characteristics (4 mA)	4 mA correspond to
		End value - characteristics (20 mA)	20 mA correspond to
	Output characteristics	0 … 100 % correspond to 4 … 20 mA	0 … 100 % correspond to 4 … 20 mA
		0 … 100 % correspond to 20 … 4 mA	
	Current range	4 … 20 mA	4 … 20 mA
		3.8 … 20.5 mA	
	Reaction when malfunctions occur	≤ 3.6 mA, ≥ 21 mA, last valid measured value	≤ 3.6 mA
Linearisation	Linearization type - liquid	Linear, cylindrical tank, spherical tank, Venturi, trapezoidal weir, rectangular weir, Palmer-Bowlus flume, V-Notch, triangular overfall	Linear
	Linearization type - bulk solids	Linear, conical bottom, pyramid bottom, sloping bottom	Linear
	Intermediate height "h"		

Menu item	Parameter	Selection	Basic setting
Scaling	Scaling size	Scaling size (dimensionless, mass, volume, height, pressure, flow, others)	Dimensionless
		Scaling unit (unit selection depending on scaling size, user-defined)	-
	Scaling format	#, #.#, #.##, #.###, #.####	#
	Scaling	Scaling	100 % correspond to 0 % correspond to
Indication	Menu language	German, English, French, Spanish, Portuguese, Italian, Dutch, Russian, Chinese, Japanese, Turkish	Order-specific
	Presentation	One measured value, measured value and bargraph, two measured values	One measured value
	Displayed values 1, 2	Percent, linearized percent, filling height, distance, scaled, measurement reliability, electronics temperature, current output, current output 2	Percent
	Backlight	On, Off	On
Access protection	Bluetooth access code	Bluetooth access code	
	Protection of the parameterization	Protection of the parameterization	
	Device code	Device code	
	Reset access code	Reset device code and Bluetooth access code to factory settings	
False signal suppression	False signal suppression	Create new, expand, delete all	-
PV adjustment	Output variable	Percent, linearized percent, filling height, distance, scaled, measurement reliability, electronics temperature, meas. rate, voltage value	Distance
	Current output, adjustment	Initial value - characteristics (4 mA)	4 mA correspond to
		End value - characteristics (20 mA)	20 mA correspond to
Date/Time	Date/Time	Date	Actual date
		Format: 24 h, 12 h	24 h
		Time	Actual time
HART mode	HART address	0 … 63	0
	Output mode	Analogue current output with HART, fix current (4 mA) with HART	Analogue current output with HART

Menu item	Parameter	Selection	Basic setting
Mode	Mode	Mode 1: EU, Albania, Andorra, Azerbaijan, Australia, Belarus, Bosnia and Herzegovina, Canada, Liechtenstein, Moldavia, Monaco, Montenegro, New Zealand, Northern Macedonia, Norway, San Marino, Saudi Arabia, Serbia, Switzerland, Turkey, Ukraine, United Kingdom, USA Mode of operation 2: Brazil, Japan, South Korea, Taiwan, Thailand Mode of operation 3: India, Malaysia, South Africa Mode 4: Russia	Mode 1
	Energy supply	Permanent voltage supply	Permanent voltage supply
		Not permanent voltage supply	
Reset	Reset	Factory settings, Reset, Restart	-
Copy instrument settings		Read from sensor, store in sensor	-

Diagnostics

Menu item	Parameter	Selection/Display	Basic setting
Diagnosis status	Diagnosis status	Diagnosis status	-
		Change counter	-
		Checksum (CRC) current	Date parameter adjustment
		Checksum (CRC) last SIL locking	Date last SIL locking
Echo curve		Echo curve	Indication of echo curve
Measured values/ pointer function	Distance	Current distance, min. distance, max. distance	Actual value
	Measurement reliability	Current measurement reliability, min. measurement reliability, max. measurement reliability	Actual value
	Measuring rate	Current meas. rate, min. meas. rate, max. meas. rate	Actual value
	Electronics temperature	Min. electronics temperature, max. electronics temperature	Actual value
	Operating voltage	Current value, min. voltage supply, max. voltage supply	Actual value
Diagnostic behaviour	Behaviour with echo loss	Last measured value, maintenance message, fault signal	Last measured value
	Time until fault signal	Time until fault signal	
Sensor information		Device name, serial number, hardware/ software version, device revision, factory calibration date	-

Menu item	Parameter	Selection/Display	Basic setting
Sensor characteristics			Configuration features
Simulation	Measured value	Percent, linearized percent, filling height, distance, scaled, measurement reliability, electronics temperature, measuring rate, operating voltage, current output, current output 2	Percent
Device memory	Echo curve of the setup	Save echo curve of setup	-
	Echo curve memory	Echo curve memory	

9.2 VEGA Tools-App (Bluetooth) and DTM (on-site, signal line, Bluetooth)

Main menu

Menu item	Parameter	Selection	Basic setting
Lock/Unlock adjustment (SIL)		Lock, unlock	Released
Measurement loop name			Sensor

Menu item	Parameter	Selection	Basic setting
Application (SIL)	Medium	Liquid	Liquid [9]
		Bulk solid	Bulk solid [10]
	Medium type - Liquid	Solvents/Liquid gases/Oils (DK value < 3)	Chemical mixtures (DK value 3 … 10)
		Chemical mixtures (DK value 3 … 10)	
		Water solution/Acids/Alkalis (DK value > 10)	
	Medium type - bulk solid	Powder, dust (granulation < 1 mm)	Granules, pellets (granulation 1 … 10 mm)
		Granules, pellets (granulation 1 … 10 mm)	
		Crushed stones, pebbles, debris (granulation > 10 mm)	
	Application - liquid	Storage tank, agitator tank, dosing tank, pumping station/pump shaft, rain overflow basin, tank/collection basin, plastic tank (measurement through tank top), mobile plastic tank (IBC), level measurement in waters, flow measurement flume/overflow, pump station/pump shaft, combined sewer overflow, demonstration	Storage tank [11]
	Application - bulk solid	Silo, bunker, crusher, heap, demonstration	Silo [12]
	Tube inner diameter	Tube inner diameter	-
	Vessel top	Flat, dished form	Flat
	Vessel bottom	Flat, dished form, conical, inclined	Flat
	Vessel height		
	Expert settings	See separate table below	
Units	Distance unit	mm, m, in, ft	m
	Temperature unit	°C, °F, K	°C
Adjustment (SIL)		Max. adjustment (distance A) Min. adjustment (distance B)	Max. adjustment 100 % corresponds to 0,000 m Min. adjustment 0 % corresponds to 120,000 m
Extended functions	See separate tables		
Diagnostics			

Extended functions

Menu item	Parameter	Selection	Basic setting
Damping	Integration time	0 … 999 s	1 s

[9] Plastic horn antenna, thread with integrated antenna system, flange with plastic plating
[10] Flange with lens antenna
[11] Plastic horn antenna, thread with integrated antenna system, flange with plastic plating
[12] Flange with lens antenna

Menu item	Parameter	Selection	Basic setting
Current output	Output characteristics	0 … 100 % correspond to 4 … 20 mA	0 … 100 % correspond to 4 … 20 mA
		0 … 100 % correspond to 20 … 4 mA	
	Current range	4 … 20 mA	4 … 20 mA
		3.8 … 20.5 mA	
	Reaction when malfunctions occur	≤ 3.6 mA, ≥ 21 mA, last valid measured value	≤ 3.6 mA
Current output 2	Output variable	Percent, linearized percent, filling height, distance, scaled, measurement reliability, electronics temperature, meas. rate, operating voltage	Percent
	Current output, adjustment	Initial value - characteristics (4 mA)	4 mA correspond to
		End value - characteristics (20 mA)	20 mA correspond to
	Output characteristics	0 … 100 % correspond to 4 … 20 mA	0 … 100 % correspond to 4 … 20 mA
		0 … 100 % correspond to 20 … 4 mA	
	Current range	4 … 20 mA	4 … 20 mA
		3.8 … 20.5 mA	
	Reaction when malfunctions occur	≤ 3.6 mA, ≥ 21 mA, last valid measured value	≤ 3.6 mA
Linearisation	Linearization type - liquid	Linear, cylindrical tank, spherical tank, Venturi, trapezoidal weir, rectangular weir, Palmer-Bowlus flume, V-Notch, triangular overfall	Linear
	Linearization type - bulk solids	Linear, conical bottom, pyramid bottom, sloping bottom	Linear
	Intermediate height "h"		
Scaling	Scaling size	Scaling size (dimensionless, mass, volume, height, pressure, flow, others)	Dimensionless
		Scaling unit (unit selection depending on scaling size, user-defined)	-
	Scaling format	#, #.#, #.##, #.###, #.####	#
	Scaling	Scaling	100 % correspond to 0 % correspond to
Indication	Menu language (display and adjustment module)	German, English, French, Spanish, Portuguese, Italian, Dutch, Russian, Chinese, Japanese, Turkish	Order-specific
	Presentation	One measured value, measured value and bargraph, two measured values	One measured value
	Displayed values 1, 2	Percent, linearized percent, filling height, distance, scaled, measurement reliability, electronics temperature, current output, current output 2	Percent
	Backlight	On, Off	On

Menu item	Parameter	Selection	Basic setting
Access protection	Bluetooth access code	Bluetooth access code	
	Protection of the parameterization	Protection of the parameterization	
	Device code	Device code	
	Reset access code	Reset device code and Bluetooth access code to factory settings	
False signal suppression	False signal suppression	Create new, extend, delete area, delete all	-
		Sounded distance to the medium from the sealing surface	-
		Edit false signal	-
PV adjustment	Output variable	Percent, linearized percent, filling height, distance, scaled, measurement reliability, electronics temperature, meas. rate, voltage value	Linearized percent
	Current output, adjustment	Initial value - characteristics (4 mA)	4 mA correspond to
		End value - characteristics (20 mA)	20 mA correspond to
HART variables	Primary Variable (PV)	Only display PV, selection made in the " *PV-adjustment*" menu item	Linearized percent
	Secondary Variable (SV)	Percent, linearized percent, filling height, distance, scaled, measurement reliability, electronics temperature, meas. rate, operating voltage	Distance
	Secondary Variable (SV) at 2nd current output	Display SV, selection made in the " *Current output 2*" menu item	Distance
	Ternary Variable (TV), Quaternary Variable (QV)	Selection as Secondary Variable (SV)	Measurement reliability
	Quaternary Variable (QV)	Selection as Secondary Variable (SV)	Electronics temperature
	Long-TAG		-
	Message		-
Date/Time	Date/Time	Date	Actual date
		Format: 24 h, 12 h	24 h
		Time	Actual time

Menu item	Parameter	Selection	Basic setting
Mode	Mode	Mode 1: EU, Albania, Andorra, Azerbaijan, Australia, Belarus, Bosnia and Herzegovina, Canada, Liechtenstein, Moldavia, Monaco, Montenegro, New Zealand, Northern Macedonia, Norway, San Marino, Saudi Arabia, Serbia, Switzerland, Turkey, Ukraine, United Kingdom, USA Mode of operation 2: Brazil, Japan, South Korea, Taiwan, Thailand Mode of operation 3: India, Malaysia, South Africa Mode 4: Russia	Mode 1
	Energy supply	Permanent voltage supply	Permanent voltage supply
		Not permanent voltage supply	
Reset	Reset	Factory settings, Reset, Restart	-
Copy instrument settings		Read from sensor, store in sensor	-

Diagnostics

Menu item	Parameter	Selection/Display	Basic setting
Status	Diagnosis status	Diagnosis status	-
	Status - Parameter adjustment	Change counter, date change counter, checksum (CRC) current, date parameter adjustment, checksum (CRC) last SIL locking, date last SIL locking	-
	Measured value status	Percent, linearized percent, filling height, distance, scaled, measurement reliability	-
	Status - Outputs	Current output, current output 2	-
	HART Device Status		-
	Status additional measured values	Electronics temperature, measuring rate, operating voltage	-
Echo curve		Echo curve	Indication of echo curve
Peak value indicator	Distance	Current distance, min./max. distance, date min./max. distance	Actual value
	Measurement reliability	Current measurement reliability, min./max. measurement reliability, date min./max. measurement reliability	Actual value
	Measuring rate	Current measuring rate, min./max. measuring rate, date min./max. measuring rate	Actual value
	Electronics temperature	Current electronics temperature, min./max. electronics temperature, date min./max. electronics temperature	Actual value
	Operating voltage	Current operating voltage, min./max. operating voltage, date min./max. operating voltage	Actual value

Menu item	Parameter	Selection/Display	Basic setting
Measured values	Measured values	Percent, linearized percent, filling height, distance, scaled, measurement reliability	Actual value
	Additional measured values	Electronics temperature, measuring rate, operating voltage	Actual value
	Outputs	Current output Primary Variable (PV), Secondary Variable (SV), Ternary Variable (TV), Quaternary Variable (QV)	-
Diagnostic behaviour	Echo loss	Behaviour in case of echo loss: last measured value, maintenance message, fault signal	Last measured value
	Echo loss (SIL)	Behaviour in case of echo loss: maintenance message, fault signal	Last measured value
		Time until fault signal	-
	Electronics temperature	Behaviour outside specified temperature: warning, output fault current, outside specification	-
	Status signals	Function check, outside specification, maintenance required	-
Sensor information		Device name, serial number, hardware/software version, device revision, factory calibration date	-
Sensor characteristics			Configuration features
Simulation	Measured value	Percent, linearized percent, filling height, distance, scaled, measurement reliability, electronics temperature, measuring rate, operating voltage, current output, current output 2	Percent
Device memory	Echo curve of the setup	Curve display, save echo curve	-
	Echo curve memory	Curve display, settings	-
	Measured value memory	Display measured value memory, settings	-
	Event memory		-
Function test		Start instrument test (wizard): Not SIL, WHG, SIL	-

9.3 Expert settings

Parameter	Presentation	Selection	Basic setting
SP1 SP2	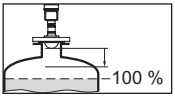	Activate measuring range start limiting Manual limiting of measuring range start	

Parameter	Presentation	Selection	Basic setting
SP3	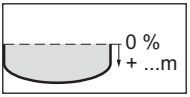	Echo detection below the 0 % adjustment	
SP4		Correction of the propagation speed	
SP5	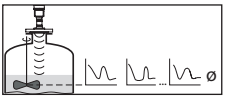	Factor for noise averaging rising	
SP6		Factor for noise averaging falling	
SP7	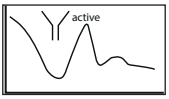	Deactivate filter function " *Smooth raw value curve*"	
SP8	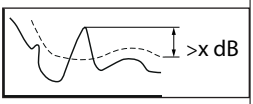	Offset detection curve for echo analysis	
SP9	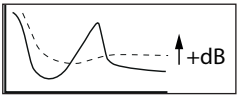	Minimum measurement reliability for level echo selection	
SP10		Additional reliability for false signal storage	
SP12	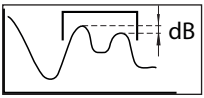	Activate " *Summarize echoes*" function	
SP13		Amplitude difference in " *Summarize echoes*" function	
SP14		Echo distance for " *Summarize echoes*" function	
SP15	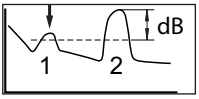	Activate function measurement of the " *first large echo*"	
SP16		Minimum amplitude function " *First large echo*"	
SP17	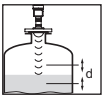	Wide focussing range	
SP18	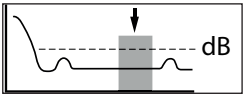	Minimum measurement reliability outside focussing range	

66101-EN-211011

Parameter	Presentation	Selection	Basic setting
SP19		Time for opening the focussing range	
SP22	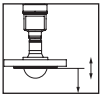	Measured value offset	
SP24	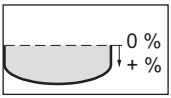	Factor for additional reliability at measuring range end	

10 Set up with other systems

10.1 DD adjustment programs

Device descriptions as Enhanced Device Description (EDD) are available for DD adjustment programs such as, for example, AMS™ and PDM.

The files can be downloaded at www.vega.com/downloads under "*Software*".

10.2 Field Communicator 375, 475

Device descriptions for the instrument are available as EDD for parameterisation with Field Communicator 375 or 475.

Integrating the EDD into the Field Communicator 375 or 475 requires the "Easy Upgrade Utility" software, which is available from the manufacturer. This software is updated via the Internet and new EDDs are automatically accepted into the device catalogue of this software after they are released by the manufacturer. They can then be transferred to a Field Communicator.

In the HART communication, the Universal Commands and a part of the Common Practice Commands are supported.

11 Diagnosis, asset management and service

11.1 Maintenance

Maintenance

If the device is used properly, no special maintenance is required in normal operation.

Precaution measures against buildup

Information:
In some applications, product buildup on the antenna system can influence the measurement result.

Depending on the sensor and application, take measures to avoid heavy soiling of the antenna system. If necessary, clean the antenna system in certain intervals.

Cleaning

The cleaning helps that the type label and markings on the instrument are visible.

Note:
Unsuitable cleaning agents and methods can damage the device. To avoid this, observe the following:

- Use only cleaning agents which do not corrode the housings, type label and seals
- Use only cleaning methods corresponding to the housing protection rating

11.2 Measured value and event memory

The instrument has several memories available for diagnostic purposes. The data remain there even in case of voltage interruption.

Measured value memory

Up to 100,000 measured values can be stored in the sensor in a ring memory. Each entry contains date/time as well as the respective measured value. Storable values are for example:

- Distance
- Filling height
- Percentage value
- Lin. percent
- Scaled
- Current value
- Measurement reliability
- Electronics temperature

The measured value memory is active in the delivery status. It saves the following data every 10 minutes or at a measured value change > 15 %:

- Distance
- Measurement reliability
- Electronics temperature

The requested values and recording conditions are set via a PC with PACTware/DTM or the control system with EDD. Data are thus read out and also reset.

Event memory

Up to 500 events are automatically stored with a time stamp in the sensor (non-deletable). Each entry contains date/time, event type, event description and value. Event types are for example:

- Modification of a parameter
- Switch-on and switch-off times
- Status messages (according to NE 107)
- Error messages (according to NE 107)

The data are read out via a PC with PACTware/DTM or the control system with EDD.

Echo curve memory

The echo curves are stored with date and time and the corresponding echo data. The memory is divided into two sections:

Echo curve of the setup: This is used as reference echo curve for the measurement conditions during setup. Changes in the measurement conditions during operation or buildup on the sensor can thus be recognized. The echo curve of the setup is stored via:

- PC with PACTware/DTM
- Control system with EDD
- Display and adjustment module

Further echo curves: Up to 10 echo curves can be stored in a ring buffer in this memory section. Additional echo curves are stored via:

- PC with PACTware/DTM
- Control system with EDD

11.3 Asset Management function

The instrument features self-monitoring and diagnostics according to NE 107 and VDI/VDE 2650. In addition to the status messages in the following tables there are more detailed error messages available under the menu item " *Diagnostics*" via the respective adjustment module.

Status messages

The status messages are divided into the following categories:

- Failure
- Function check
- Out of specification
- Maintenance required

and explained by pictographs:

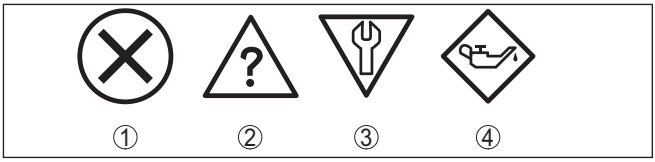

Fig. 60: Pictographs of the status messages

1 Failure - red
2 Out of specification - yellow
3 Function check - orange
4 Maintenance required - blue

Failure: Due to a malfunction in the instrument, a fault signal is output.

This status message is always active. It cannot be deactivated by the user.

Function check: The instrument is being worked on, the measured value is temporarily invalid (for example during simulation).

This status message is inactive by default.

Out of specification: The measured value is unreliable because an instrument specification was exceeded (e.g. electronics temperature).

This status message is inactive by default.

Maintenance required: Due to external influences, the instrument function is limited. The measurement is affected, but the measured value is still valid. Plan in maintenance for the instrument because a failure is expected in the near future (e.g. due to buildup).

This status message is inactive by default.

Failure

Code Text message	Cause	Rectification	DevSpec State in CMD 48
F013 no measured value available	Sensor does not detect an echo during operation Antenna system dirty or defective	Check or correct installation and/or parameter settings Clean or exchange process component or antenna	Byte 5, Bit 0 of Byte 0 … 5
F017 Adjustment span too small	Adjustment not within specification	Change adjustment according to the limit values (difference between min. and max. ≥ 10 mm)	Byte 5, Bit 1 of Byte 0 … 5
F025 Error in the linearization table	Values are not continuously rising, for example illogical value pairs	Check linearization table Delete table/Create new	Byte 5, Bit 2 of Byte 0 … 5
F036 No operable software	Failed or interrupted software update	Repeat software update Check electronics version Exchanging the electronics Send instrument for repair	Byte 5, Bit 3 of Byte 0 … 5
F040 Error in the electronics	Hardware defect	Exchanging the electronics Send instrument for repair	Byte 5, Bit 4 of Byte 0 … 5
F080 General software error	General software error	Disconnect operating voltage briefly	Byte 5, Bit 5 of Byte 0 … 5
F105 Determine measured value	The instrument is still in the switch-on phase, the measured value could not yet be determined	Wait for the end of the switch-on phase Duration up to approx. 3 minutes depending on the version and parameter settings	Byte 5, Bit 6 of Byte 0 … 5
F113 Communication error	EMC interference	Remove EMC influences	Byte 4, Bit 4 of Byte 0 … 5

Code Text message	Cause	Rectification	DevSpec State in CMD 48
F125 Impermissible electronics temperature	Temperature of the electronics in the non-specified range	Check ambient temperature Insulate electronics Use instrument with higher temperature range	Byte 5, Bit 7 of Byte 0 … 5
F260 Error in the calibration	Error in the calibration carried out in the factory Error in the EEPROM	Exchanging the electronics Send instrument for repair	Byte 4, Bit 0 of Byte 0 … 5
F261 Error in the instrument settings	Error during setup False signal suppression faulty Error when carrying out a reset	Repeat setup Carry out a reset	Byte 4, Bit 1 of Byte 0 … 5
F264 Installation/Setup error	Adjustment not within the vessel height/measuring range Max. measuring range of the instrument not sufficient	Check or correct installation and/or parameter settings Use an instrument with bigger measuring range	Byte 4, Bit 2 of Byte 0 … 5
F265 Measurement function disturbed	Sensor no longer carries out a measurement Operating voltage too low	Check operating voltage Carry out a reset Disconnect operating voltage briefly	Byte 4, Bit 3 of Byte 0 … 5
F267 No executable sensor software	Sensor cannot start	Exchanging the electronics Send instrument for repair	-

Function check

Code Text message	Cause	Rectification	DevSpec State in CMD 48
C700 Simulation active	A simulation is active	Finish simulation Wait for the automatic end after 60 mins.	"Simulation Active" in "Standardized Status 0"

Out of specification

Code Text message	Cause	Rectification	DevSpec State in CMD 48
S600 Impermissible electronics temperature	Temperature of the processing electronics in the non-specified section	Check ambient temperature Insulate electronics Use instrument with higher temperature range	Byte 23, Bit 0 of Byte 14 … 24
S601 Overfilling	Level echo in the close range not available	Reduce level 100 % adjustment: Increase value Check mounting socket Remove possible interfering signals in the close range	Byte 23, Bit 1 of Byte 14 … 24
S603 Impermissible operating voltage	Operating voltage below specified range	Check electrical connection If necessary, increase operating voltage	

Maintenance

Code Text message	Cause	Rectification	DevSpec State in CMD 48
M500 Error during the reset "delivery status"	The data could not be restored during the reset to delivery status	Repeat reset Load XML file with sensor data into the sensor	Byte 24, Bit 0 of Byte 14 … 24
M501 Error in the non-active linearisation table	Hardware error EEPROM	Exchanging the electronics Send instrument for repair	Byte 24, Bit 1 of Byte 14 … 24
M504 Error at a device interface	Hardware defect	Check connections Exchanging the electronics Send instrument for repair	Byte 24, Bit 4 of Byte 14 … 24
M505 No echo available	Sensor does not detect an echo during operation Antenna dirty or defective	Clean the antenna Use a more suitable antenna/sensor Remove possible false echoes Optimize sensor position and orientation	Byte 24, Bit 5 of Byte 14 … 24
M506 Installation/Setup error	Error during setup	Check or correct installation and/or parameter settings	Byte 24, Bit 6 of Byte 14 … 24
M507 Error in the instrument settings	Error during setup Error when carrying out a reset False signal suppression faulty	Carry out reset and repeat setup	Byte 24, Bit 7 of Byte 14 … 24

11.4 Rectify faults

Reaction when malfunction occurs

The operator of the system is responsible for taking suitable measures to rectify faults.

Fault rectification

The first measures are:

- Evaluation of fault messages
- Checking the output signal
- Treatment of measurement errors

A smartphone/tablet with the adjustment app or a PC/notebook with the software PACTware and the suitable DTM offer you further comprehensive diagnostic possibilities. In many cases, the causes can be determined in this way and the faults eliminated.

4 … 20 mA signal

Connect a multimeter in the suitable measuring range according to the wiring plan. The following table describes possible errors in the current signal and helps to eliminate them:

Error	Cause	Rectification
4 … 20 mA signal not stable	Fluctuating measured value	Set damping

Error	Cause	Rectification
4 … 20 mA signal missing	Electrical connection faulty	Check connection, correct, if necessary
	Voltage supply missing	Check cables for breaks; repair if necessary
	Operating voltage too low, load resistance too high	Check, adapt if necessary
Current signal greater than 22 mA, less than 3.6 mA	Sensor electronics defective	Replace device or send in for repair depending on device version

Treatment of measurement errors

The below tables show typical examples of application-related measurement errors with liquids. The measurement errors are differentiated according to the following:

- Constant level
- Filling
- Emptying

The images in column " *Error pattern*" show the real level as a broken line and the level displayed by the sensor as a continuous line.

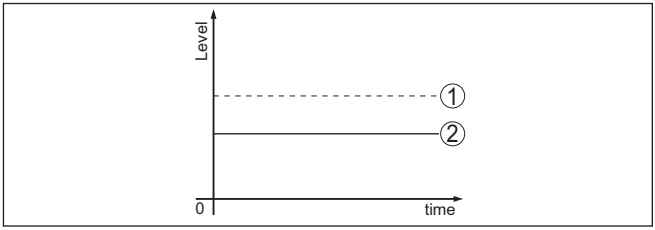

Fig. 61: Display of error images

1 Real level
2 Level displayed by the sensor

Note:
If the output level is constant, the cause could also be the fault setting of the current output to " *Hold value*".

If the level is too low, the reason could be a line resistance that is too high

Measurement error with constant level

Fault description	Cause	Rectification
Measured value shows a too low or too high level 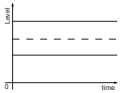	Min./max. adjustment not correct	Adapt min./max. adjustment
	Incorrect linearization curve	Adapt linearization curve
	Installation in a bypass tube or standpipe, hence running time error (small measurement error close to 100 %/large error close to 0 %)	Check parameter "Application" with respect to vessel form, adapt if necessary (bypass, standpipe, diameter).

66101-EN-211011

Fault description	Cause	Rectification
Measured value jumps towards 0 % (liquids only) 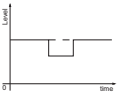	Multiple echo (vessel top, medium surface) with amplitude higher than the level echo.	Check parameter "Application", especially vessel top, type of medium, dished bottom, high dielectric constant, and adapt if necessary.
Measured value jumps towards 100 % 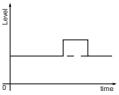	Due to the process, the amplitude of the level echo sinks A false signal suppression was not carried out	Carry out a false signal suppression
	Amplitude or position of a false signal has changed (e.g. condensation, buildup); false signal suppression no longer matches actual conditions.	Determine the reason for the changed false signals, carry out false signal suppression, e.g. with condensation.

Measurement error during filling

Fault description	Cause	Rectification
Measured value remains unchanged during filling 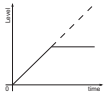	False signals in the close range too big or level echo too small Strong foam or vortex generation Max. adjustment not correct	Eliminate false signals in the close range Check measurement situation: Antenna must protrude out of the nozzle, installations Remove contamination on the antenna In case of interferences due to installations in the close range: Change polarisation direction Create a new false signal suppression Adapt max. adjustment
Measured value remains in the area of the bottom during filling 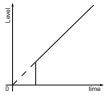	Echo from the tank bottom larger than the level echo, for example, with products with $\varepsilon_r < 2.5$ oil-based, solvents	Check parameters Medium, Vessel height and Floor form, adapt if necessary
Measured value remains momentarily unchanged during filling and then jumps to the correct level 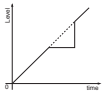	Turbulence on the medium surface, quick filling	Check parameters, change if necessary, e.g. in dosing vessel, reactor

Fault description	Cause	Rectification
Measured value jumps towards 0 % during filling 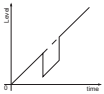	Amplitude of a multiple echo (vessel top - medium surface) is larger than the level echo.	Check parameter "Application", especially vessel top, type of medium, dished bottom, high dielectric constant, and adapt if necessary.
	The level echo cannot be distinguished from the false signal at a false signal position (jumps to multiple echo).	In case of interferences due to installations in the close range: Change polarisation direction Chose a more suitable installation position
	Transverse reflection from an extraction funnel, amplitude of the transverse reflection larger than the level echo	Direct sensor to the opposite funnel wall, avoid crossing with the filling stream.
Measured value fluctuates around 10 … 20 % (only bulk solids) 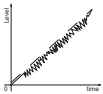	Various echoes from an uneven medium surface, e.g. a material cone	Check parameter "Material Type" and adapt, if necessary Optimize installation position and sensor orientation
	Reflections from the medium surface via the vessel wall (deflection)	Select a more suitable installation position, optimize sensor orientation, e.g. with a swivelling holder
Measured value jumps towards 100 % during filling 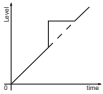	Due to strong turbulence and foam generation during filling, the amplitude of the level echo sinks. Measured value jumps to false signal.	Carry out a false signal suppression
Measured value jumps sporadically to 100 % during filling 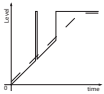	Varying condensation or contamination on the antenna.	Carry out a false signal suppression or increase false signal suppression with condensation/contamination in the close range by editing. Use radar sensor with flexible antenna cover for bulk materials.
Measured value jumps to ≥ 100 % or 0 m distance 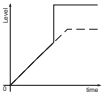	Level echo is no longer detected at close range due to foam generation or interference signals at close range.	Check measuring point: Antenna should protrude out of the threaded mounting socket, possible false echoes through flange socket. Remove contamination on the antenna Use a sensor with a more suitable antenna

Measurement error during emptying

Fault description	Cause	Rectification
Measured value remains unchanged in the close range during emptying	False signal larger than the level echo Level echo too small	Eliminate false signal in the close range. Check: Antenna must protrude from the nozzle. Remove contamination on the antenna In case of interferences due to installations in the close range: Change polarisation direction After eliminating the false signals, the false signal suppression must be deleted. Carry out a new false signal suppression.
Measured value jumps towards 0 % during emptying	Echo from the tank bottom larger than the level echo, for example, with products with $\varepsilon_r < 2.5$ oil-based, solvents	Check parameters Medium type, Vessel height and Floor form, adapt if necessary
Measured value jumps sporadically towards 100 % during emptying 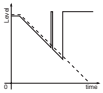	Varying condensation or contamination on the antenna	Carry out false signal suppression or increase false signal suppression in the close range by editing. With bulk solids, use radar sensor with purging air connection.
Measured value fluctuates around 10 … 20 % (only bulk solids) 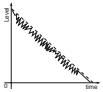	Various echoes from an uneven medium surface, e.g. an extraction funnel Reflections from the medium surface via the vessel wall (deflection)	Check parameter "Type of medium" and adapt, if necessary. Optimize installation position and sensor orientation.

Reaction after fault rectification

Depending on the reason for the fault and the measures taken, the steps described in chapter " *Setup*" must be carried out again or must be checked for plausibility and completeness.

24 hour service hotline

Should these measures not be successful, please call in urgent cases the VEGA service hotline under the phone no. **+49 1805 858550**.

The hotline is also available outside normal working hours, seven days a week around the clock.

Since we offer this service worldwide, the support is provided in English. The service itself is free of charge, the only costs involved are the normal call charges.

11.5 Exchanging the electronics module

If the electronics module is defective, it can be replaced by the user.

In Ex applications, only instruments and electronics modules with appropriate Ex approval may be used.

If there is no electronics module available on site, the electronics module can be ordered through the agency serving you. The electronics modules are adapted to the respective sensor and differ in signal output or voltage supply.

The new electronics module must be loaded with the default settings of the sensor. These are the options:

- In the factory
- Or on site by the user

In both cases, the serial number of the sensor is needed. The serial numbers are stated on the type label of the instrument, on the inside of the housing as well as on the delivery note.

When loading on site, the order data must first be downloaded from the Internet (see operating instructions " *Electronics module*").

Caution:
All application-specific settings must be entered again. That's why you have to carry out a fresh setup after exchanging the electronics.

If you saved the parameter settings during the first setup of the sensor, you can transfer them to the replacement electronics module. A fresh setup is then not necessary.

11.6 Software update

The device software can be updated in the following ways:

- Interface adapter VEGACONNECT
- Bluetooth

Depending on the method, the following components are required:

- Instrument
- Voltage supply
- Interface adapter VEGACONNECT
- Display and adjustment module PLICSCOM with Bluetooth function
- PC with PACTware/DTM and Bluetooth USB adapter
- Current instrument software as file

You can find the current instrument software as well as detailed information on the procedure in the download area of our homepage: www.vega.com.

You can find information about the installation in the download file.

Caution:
Instruments with approvals can be bound to certain software versions. Therefore make sure that the approval is still effective after a software update is carried out.

You can find detailed information in the download area at www.vega.com.

11.7 How to proceed if a repair is necessary

You can find an instrument return form as well as detailed information about the procedure in the download area of our homepage. By doing this you help us carry out the repair quickly and without having to call back for needed information.

In case of repair, proceed as follows:

- Print and fill out one form per instrument
- Clean the instrument and pack it damage-proof
- Attach the completed form and, if need be, also a safety data sheet outside on the packaging
- Ask the agency serving you to get the address for the return shipment. You can find the agency on our homepage.

12 Dismount

12.1 Dismounting steps

Warning:
Before dismounting, be aware of dangerous process conditions such as e.g. pressure in the vessel or pipeline, high temperatures, corrosive or toxic media etc.

Take note of chapters " *Mounting*" and " *Connecting to voltage supply*" and carry out the listed steps in reverse order.

12.2 Disposal

The instrument consists of materials which can be recycled by specialised recycling companies. We use recyclable materials and have designed the electronics to be easily separable.

WEEE directive
The instrument does not fall in the scope of the EU WEEE directive. Article 2 of this Directive exempts electrical and electronic equipment from this requirement if it is part of another instrument that does not fall in the scope of the Directive. These include stationary industrial plants.

Pass the instrument directly on to a specialised recycling company and do not use the municipal collecting points.

If you have no way to dispose of the old instrument properly, please contact us concerning return and disposal.

13 Certificates and approvals (in preparation)

13.1 Radio licenses

Radar
The device has been tested and approved in accordance with the current edition of the applicable country-specific norms or standards.

The confirmations as well as regulations for use can be found in the document " *Radio licenses*" supplied or on our homepage.

Bluetooth
The Bluetooth radio module in the device has been tested and approved according to the current edition of the applicable country-specific norms or standards.

The confirmations as well as regulations for use can be found in the document " *Radio licenses*" supplied or on our homepage.

13.2 Approvals for Ex areas

Approved versions for use in hazardous areas are available or in preparation for the device series.

You can find the relevant documents on our homepage.

13.3 Approvals as overfill protection

Approved versions for use as part of an overfill protection system are available or in preparation for this device series.

The corresponding approvals can be found on our homepage.

13.4 Food and pharmaceutical certificates

Versions for use in the food and pharmaceutical industries are available or in preparation.

The corresponding certificates can be found on our homepage.

13.5 EU conformity

The device fulfils the legal requirements of the applicable EU directives. By affixing the CE marking, we confirm the conformity of the instrument with these directives.

The EU conformity declaration can be found on our homepage.

13.6 NAMUR recommendations

NAMUR is the automation technology user association in the process industry in Germany. The published NAMUR recommendations are accepted as the standard in field instrumentation.

The device fulfils the requirements of the following NAMUR recommendations:

- NE 21 – Electromagnetic compatibility of equipment
- NE 43 – Signal level for fault information from measuring transducers

- NE 53 – Compatibility of field devices and display/adjustment components
- NE 107 – Self-monitoring and diagnosis of field devices

For further information see www.namur.de.

13.7 Environment management system

Protection of the environment is one of our most important duties. That is why we have introduced an environment management system with the goal of continuously improving company environmental protection. The environment management system is certified according to DIN EN ISO 14001. Please help us fulfil this obligation by observing the environmental instructions in chapters " *Packaging, transport and storage*", " *Disposal*" of these operating instructions.

14 Supplement

14.1 Technical data

Note for approved instruments

The technical data in the respective safety instructions which are included in delivery are valid for approved instruments (e.g. with Ex approval). These data can differ from the data listed herein, for example regarding the process conditions or the voltage supply.

All approval documents can be downloaded from our homepage.

Materials and weights

Materials, wetted parts

Plastic horn antenna	
– Adapter flange	PP-GF30 black
– Seal, adapter flange	FKM (COG VI500), EPDM (COG AP310)
– Focussing lense	PP
Thread with integrated antenna system	
– Process fitting	316L
– Antenna	PVDF
– Seal, antenna system	FKM
– Process seal	Klingersil C-4400
Flange with plastic plating	
– Flange plating, antenna encapsulation	PTFE
Hygienic fitting	
– Hygienic antenna encapsulation	PEEK
– Surface roughness of the antenna encapsulation	R_a < 0.8 µm
– Additional process seal with certain hygienic fittings	FKM (SHS FPM 70C3 GLT), EPDM (A+P 70.10-02), Kalrez 6230
Flange with lens antenna	
– Process fitting	316L
– Antenna	PEEK
– Seal, antenna system	FKM (SHS FPM 70C3 GLT), FFKM (Kalre 6375, G75B), EPDM (A+P 70.10-02)
Rinsing air connection	
– Flushing ring	PP-GFK
– O-ring seal, purging air connection	FKM (SHS FPM 70C3 GLT), EPDM (COG AP310)
– Reflux valve	316Ti
– Sealing, reflux valve	FKM (SHS FPM 70C3 GLT), EPDM (COG AP310)

Materials, non-wetted parts

Mounting parts	
– Antenna cone, plastic horn antenna, compression flange	PBT-GF 30

– Mounting strap, fixing screws mounting strap	316L
– Fixing screws, adapter flange	304
Housing	
– Plastic housing	Plastic PBT (Polyester)
– Aluminium die-cast housing	Aluminium die-casting AlSi10Mg, powder-coated (Basis: Polyester)
– Stainless steel housing	316L
– Cable gland, blind plug cable gland	PA, stainless steel, brass
– Sealing, cable gland	NBR
– Inspection window housing cover	Polycarbonate (UL-746-C listed), glass [13]
– Ground terminal	316L
Weights	
– Instrument (depending on housing, process fitting and antenna)	approx. 2 … 17.2 kg (4.409 … 37.92 lbs)

Torques

Max. torque, plastic horn antenna	
– Mounting screws, mounting strap on sensor housing	4 Nm (2.950 lbf ft)
– Flange screws, compression flange DN 80	5 Nm (3.689 lbf ft)
– Terminal screws, adapter flange - antenna	2.5 Nm (1.844 lbf ft)
– Flange screws, adapter flange DN 100	7 Nm (5.163 lbf ft)
Max. torque, thread with integrated antenna system	
– G¾	30 Nm (22.13 lbf ft)
– G1½	200 Nm (147.5 lbf ft)
– G1½ (with PTFE threaded adapter)	5 Nm (3.688 lbf ft)
Torque, flange with plastic plating	
– Required torque of the flange screws for standard flanges	60 Nm (44.25 lbf ft)
– Recommended torque for tightening the flange screws of standard flanges	60 … 100 Nm (44.25 … 73.76 lbf ft)
Max. torque, hygienic fittings	
– Flange screws DRD connection	20 Nm (14.75 lbf ft)
Max. torque, version flange with lens antenna	
– Terminal screws for swivelling holder	8 Nm (5.9 lbf ft)
Max. torque for NPT cable glands and Conduit tubes	
– Plastic housing	10 Nm (7.376 lbf ft)
– Aluminium/Stainless steel housing	50 Nm (36.88 lbf ft)

[13] Glass with Aluminium and stainless steel housing

Input variable

Measured variable

The measured quantity is the distance between the end of the sensor antenna and the medium surface. The reference plane for the measurement and the usable measuring range are dependent on the antenna system.

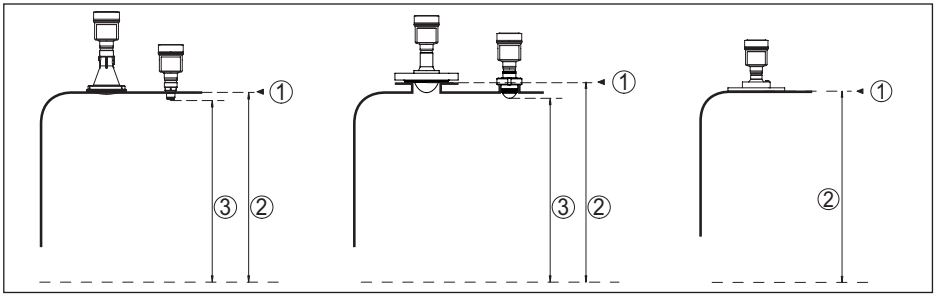

Fig. 62: Data of the input variable

1 Reference plane (depending on the antenna system)
2 Measured variable, max. measuring range
3 Utilisable measuring range (depending on the antenna version)

Max. measuring range 120 m (393.7 ft)

Recommended measuring range, depending on the antenna version and size [14][15]

Antenna version	Size	Recommended measuring range up to
Thread with integrated antenna system	G¾, ¾ NPT	10 m (32.81 ft)
	G1, 1 NPT	20 m (65.62 ft)
	G1½, 1½ NPT	30 m (98.42 ft)
Plastic horn antenna	DN 80	120 m (393.7 ft)
Flange with plastic plating, hygienic fittings	≥ DN 25	20 m (65.62 ft)
	≥ DN 50, 2"	30 m (98.42 ft)
	≥ DN 80, 3"	120 m (393.7 ft)
Flange with lens antenna	≥ DN 50, 2"	30 m (98.42 ft)
	≥ DN 80, 3"	120 m (393.7 ft)

blocking distance [16]

- Modes 1, 2, 4 0 mm (0 in)
- Mode 3 ≥ 250 mm (9.843 in)

Switch-on phase

Run-up time t

- U_B = 12 V DC < 10 s
- U_B = 18 V DC < 10 s

[14] With good reflection conditions, larger measuring ranges are also possible.
[15] The specified values correspond to the default values on delivery
[16] Depending on the operating conditions

– U_B = 24 V DC	< 10 s
Starting current for run-up time	≤ 3.6 mA

Output variable	
Output signal	4 … 20 mA/HART
Range of the output signal	3.8 … 20.5 mA/HART (default setting)
Signal resolution	0.3 µA
Resolution, digital	1 mm (0.039 in)
Fault signal, current output (adjustable)	≤ 3.6 mA, ≥ 21 mA, last valid measured value
Max. output current	22 mA
Starting current	≤ 3.6 mA; ≤ 10 mA for 5 ms after switching on
Load	See load resistance under Power supply
Damping (63 % of the input variable), adjustable	0 … 999 s
HART output values according to HART 7.0 [17]	
– PV (Primary Value)	Lin. percent
– SV (Secondary Value)	Distance
– TV (Third Value)	Measurement reliability
– QV (Fourth Value)	Electronics temperature
Fulfilled HART specification	7.6
Further information on Manufacturer ID, Device ID, Device Revision	See website of FieldComm Group

Deviation (according to DIN EN 60770-1)	
Process reference conditions according to DIN EN 61298-1	
– Temperature	+18 … +30 °C (+64 … +86 °F)
– Relative humidity	45 … 75 %
– Air pressure	860 … 1060 mbar/86 … 106 kPa (12.5 … 15.4 psig)
Installation reference conditions [18]	
– Min. distance to internal installations	> 200 mm (7.874 in)
– Reflector	Flat plate reflector
– False reflections	Biggest false signal, 20 dB smaller than the useful signal
Deviation with liquids	≤ 1 mm (meas. distance > 0.25 m/0.8202 ft)
Non-repeatability [19]	≤ 1 mm
Deviation with bulk solids	The values depend to a great extent on the application. Binding specifications are thus not possible.

[17] Default values can be assigned individually.
[18] In case of deviations from reference conditions, the offset due to installation can be up to ± 4 mm. This offset can be compensated by the adjustment.
[19] Already included in the meas. deviation

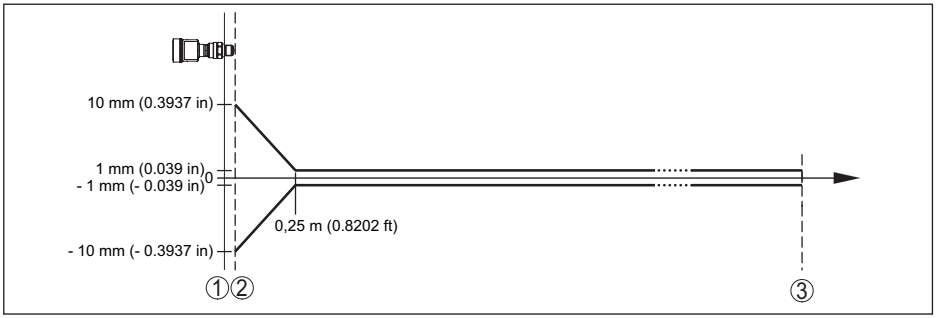

Fig. 63: Deviation under reference conditions (example thread with integrated antenna system, applies accordingly to all versions except flange with lens antenna)

1 Reference plane
2 Antenna edge
3 Recommended measuring range

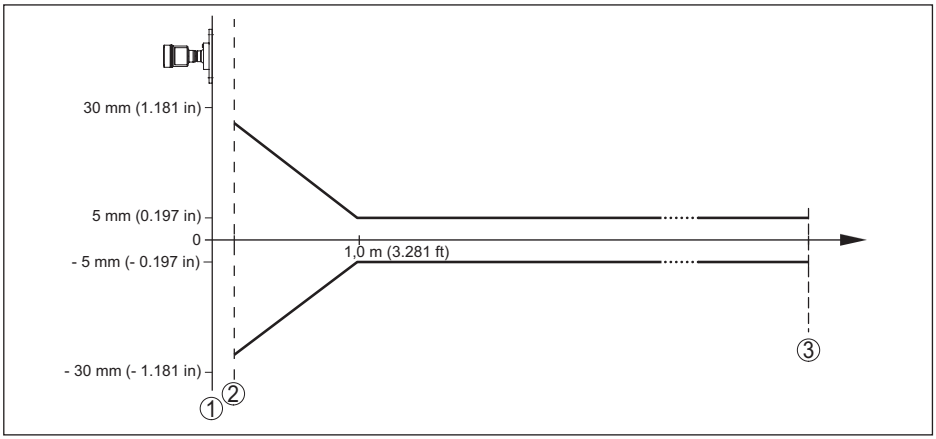

Fig. 64: Deviation under reference conditions (flange with lens antenna)

1 Reference plane
2 Recommended min. distance, specifications see below
3 Measuring range end

Recommended min. distance for typical bulk solids applications [20]

– Plastic horn antenna, flange with lens antenna	250 mm (9.843 in)
– Thread with integrated antenna system	500 mm (19.69 in)
blocking distance	150 mm (5.906 in)

Variables influencing measurement accuracy [21]

Specifications apply to the digital measured value

[20] Depending of the reflective properties of the measured media.
[21] Determination of the temperature drift acc. to the limit point method

Temperature drift - Digital output	< 3 mm/10 K, max. 10 mm

Specifications apply also to the current output

Temperature drift - Current output	< 0.03 %/10 K or max. 0.3 % relating to the 16.7 mA span
Deviation in the current output due to digital/analogue conversion	< 15 µA

Additional deviation through electromagnetic interference

– According to NAMUR NE 21	< 80 µA
– According to EN 61326-1	None
– According to IACS E10 (shipbuilding)/ IEC 60945	< 250 µA

Characteristics and performance data

Measuring frequency	W-band (80 GHz technology)
Measuring cycle time [22]	approx. 300 ms
Step response time [23]	≤ 3 s

Beam angle [24]

Version	Size	Beam angle
Thread with integrated antenna system	G¾, ¾ NPT	14°
	G1, 1 NPT	10°
	G1½, 1½ NPT (+250 °C)	10°
	G1½, 1½ NPT (+150 °C)	7°
Plastic horn antenna	DN 80	3°
Flange with plastic plating, hygienic fittings	≥ DN 25	10°
	≥ DN 50, 2"	6°
	≥ DN 80, 3"	3°
Flange with lens antenna		3°

Emitted HF power (depending on the parameter setting) [25]

– Average spectral transmission power density	-3 dBm/MHz EIRP
– Max. spectral transmission power density	+34 dBm/50 MHz EIRP
– Max. power density at a distance of 1 m	< 3 µW/cm^2

Ambient conditions

Ambient, storage and transport temperature	-40 … +80 °C (-40 … +176 °F)

[22] With operating voltage U_B ≥ 24 V DC
[23] Time span after a sudden distance change from 1 m to 5 m until the output signal reaches 90 % of the final value for the first time (IEC 61298-2). Valid with operating voltage U_B ≥ 24 V DC
[24] Outside the specified beam angle, the energy level of the radar signal is 50% (-3 dB) less.
[25] EIRP: Equivalent Isotropic Radiated Power

Process conditions

For the process conditions, please also note the specifications on the type label. The lowest value (amount) always applies.

Process temperature

Version	Antenna material	Process seal	Process temperature (measured on the process fitting)
Plastic horn antenna	PP		-40 … +80 °C (-40 … +176 °F)
Thread with integrated antenna system	PEEK	FKM (SHS FPM 70C3 GLT)	-40 … +150 °C (-40 … +302 °F)
			-40 … +200 °C (-40 … +392 °F)
		FFKM (Kalrez 6230)	-15 … +150 °C (5 … +302 °F)
			-15 … +250 °C (5 … +482 °F)
		FFKM (Kalrez 6375)	-20 … +150 °C (-4 … +302 °F)
			-20 … +200 °C (-4 … +392 °F)
		FFKM (Perlast G74S, G75B)	-15 … +150 °C (5 … +302 °F)
			-15 … +250 °C (5 … +482 °F)
		EPDM (A+P 70.10-02)	-55 … +150 °C (-67 … +302 °F)
Flange with plastic plating	PTFE, PTFE (8 mm)	PTFE	-40 … +150 °C (-40 … +302 °F)
			-40 … +200 °C (-40 … +392 °F)
			-196 … +200 °C (-320.8 … +392 °F)
	PFA (8 mm)	PFA	-40 … +150 °C (-40 … +302 °F)
			-40 … +200 °C (-40 … +392 °F)
Hygienic fittings	PEEK	PTFE (with Clamp connection)	-40 … +150 °C (-40 … +302 °F)
			-40 … +200 °C (-40 … +392 °F)
		FKM (SHS FPM 70C3 GLT)	-20 … +150 °C (-4 … +302 °F)
		EPDM (A+P 70.10-02)	-40 … +150 °C (-40 … +302 °F)
		FFKM (Kalrez 6230)	-15 … +150 °C (5 … +302 °F)
Flange with lens antenna	PEEK	FKM (SHS FPM 70C3 GLT)	-40 … +150 °C (-40 … +302 °F)
			-40 … +200 °C (-40 … +392 °F)
		FFKM (Kalrez 6375)	-20 … +150 °C (-4 … +302 °F)
			-20 … +200 °C (-4 … +392 °F)
		FFKM (Perlast G75B)	-15 … +150 °C (5 … +302 °F)
			-15 … +250 °C (5 … +482 °F)
		EPDM (A+P 70.10-02)	-40 … +150 °C (-40 … +302 °F)

SIP process temperature (SIP = Sterilization in place)

Applies to steam-suitable device configuration, i.e. flange with plastic plating or hygienic fitting.

Vapour stratification up to 2 h +150 °C (+302 °F)

Derating, ambient temperature - plastic horn antenna

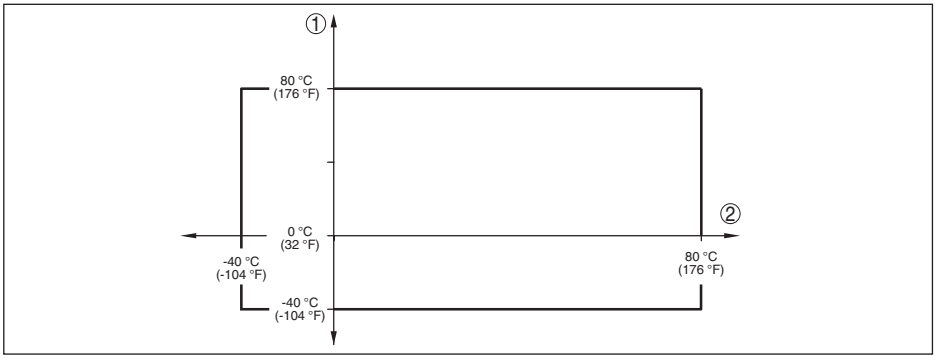

Fig. 65: Derating, ambient temperature, plastic horn antenna

1 *Ambient temperature*
2 *Process temperature*

Derating, ambient temperature - thread with integrated antenna system

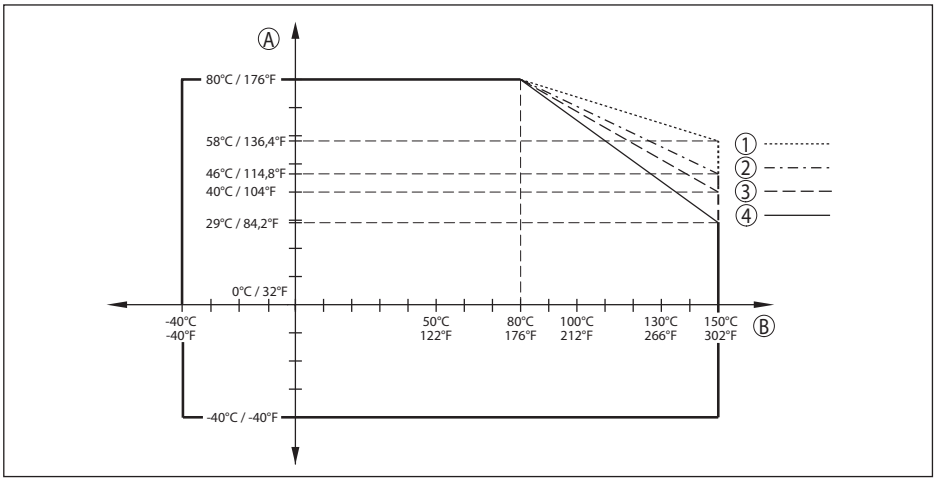

Fig. 66: Derating, ambient temperature, thread with integrated antenna system up to +150 °C (+302 °F)

A *Ambient temperature*
B *Process temperature*
1 *Aluminium housing*
2 *Stainless steel housing (precision casting)*
3 *Plastic housing*
4 *Stainless steel housing (electropolished)*

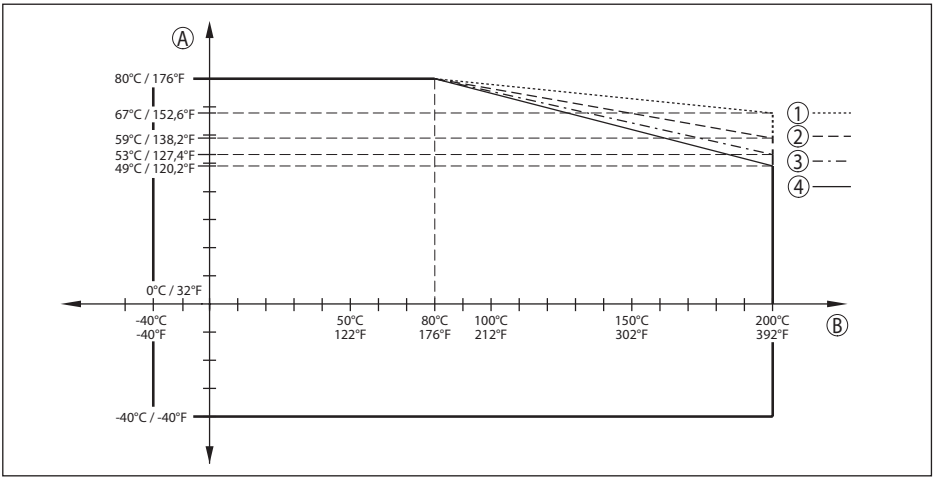

Fig. 67: Derating, ambient temperature, thread with integrated antenna system up to +200 °C (+392 °F)

A Ambient temperature
B Process temperature
1 Aluminium housing
2 Stainless steel housing (precision casting)
3 Plastic housing
4 Stainless steel housing (electropolished)

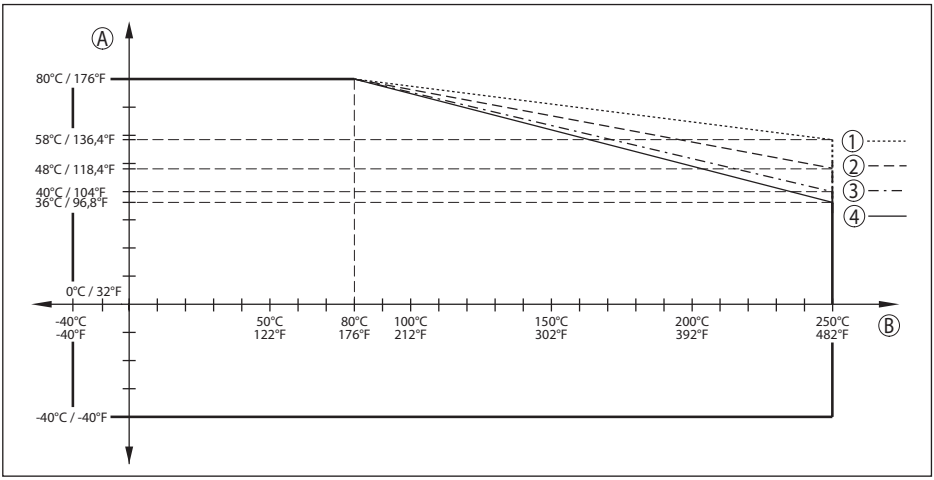

Fig. 68: Derating, ambient temperature, thread with integrated antenna system up to +250 °C (+482 °F)

A Ambient temperature
B Process temperature
1 Aluminium housing
2 Stainless steel housing (precision casting)
3 Plastic housing
4 Stainless steel housing (electropolished)

Derating ambient temperature - Flange with plastic plating, hygienic fitting

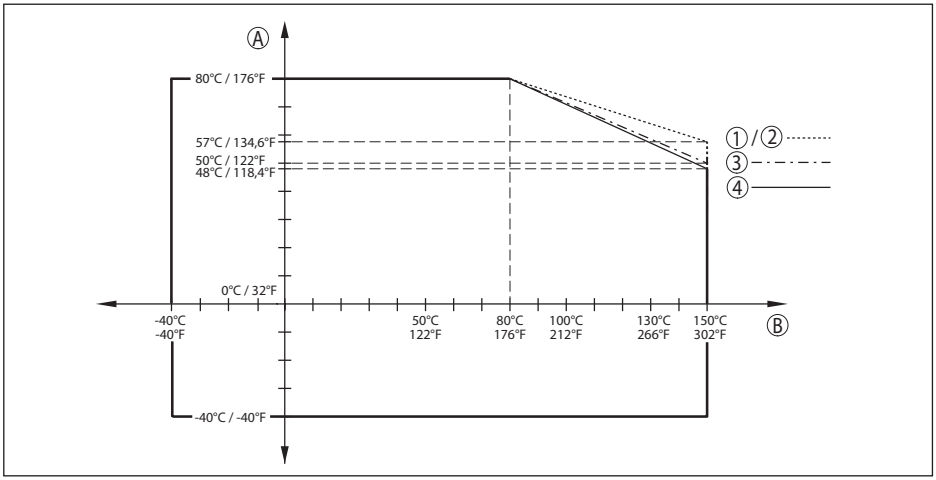

Fig. 69: Derating ambient temperature, flange with plastic plating, hygienic fitting up to +150 °C (+302 °F)

A Ambient temperature
B Process temperature
1 Aluminium housing
2 Stainless steel housing (precision casting)
3 Plastic housing
4 Stainless steel housing (electropolished)

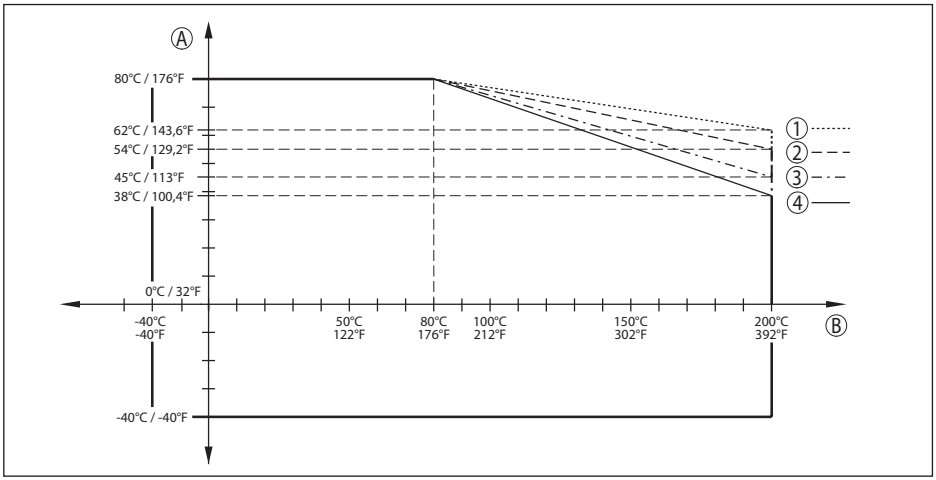

Fig. 70: Derating ambient temperature, flange with plastic plating up to +200 °C (+392 °F)

A Ambient temperature
B Process temperature
1 Aluminium housing
2 Stainless steel housing (precision casting)
3 Plastic housing
4 Stainless steel housing (electropolished)

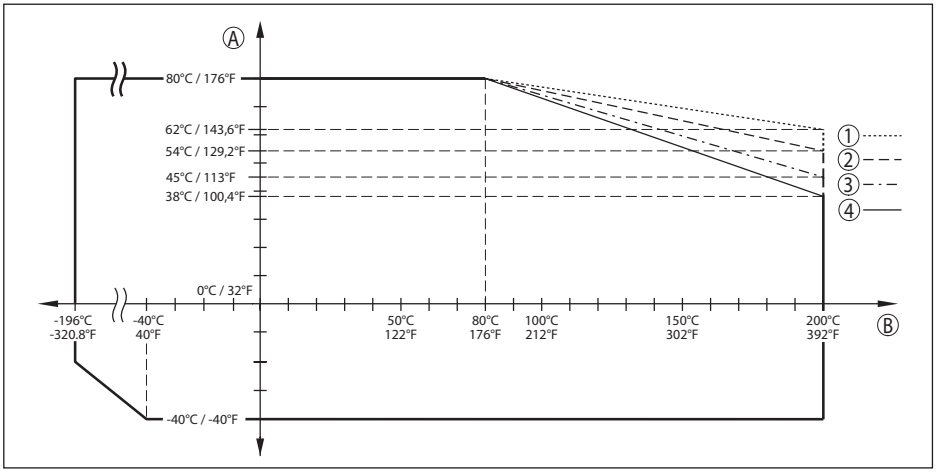

Fig. 71: Derating ambient temperature, flange with plastic plating -196 … +200 °C (-320.8 … +392 °F)

A Ambient temperature
B Process temperature
1 Aluminium housing
2 Stainless steel housing (precision casting)
3 Plastic housing
4 Stainless steel housing (electropolished)

Derating ambient temperature - Flange with lens antenna

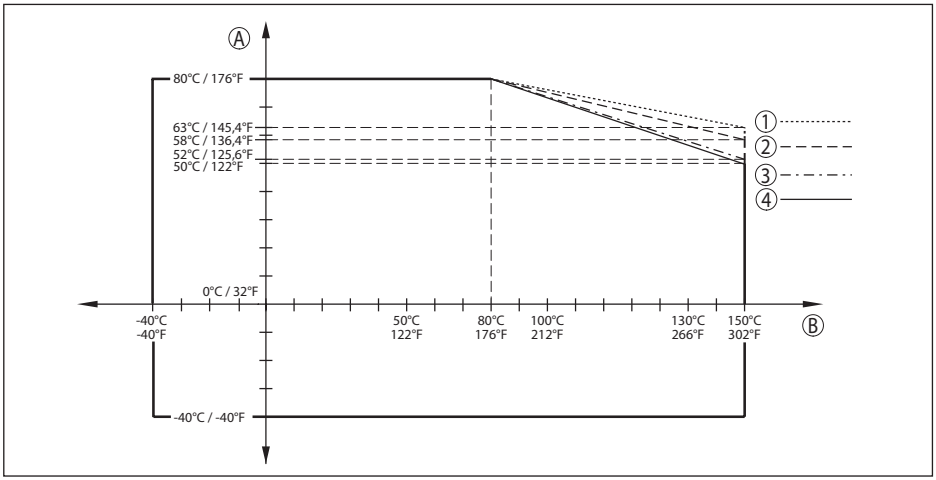

Fig. 72: Derating, ambient temperature, flange with lens antenna up to +150 °C (+302 °F)

A Ambient temperature
B Process temperature
1 Aluminium housing
2 Stainless steel housing (precision casting)
3 Plastic housing
4 Stainless steel housing (electropolished)

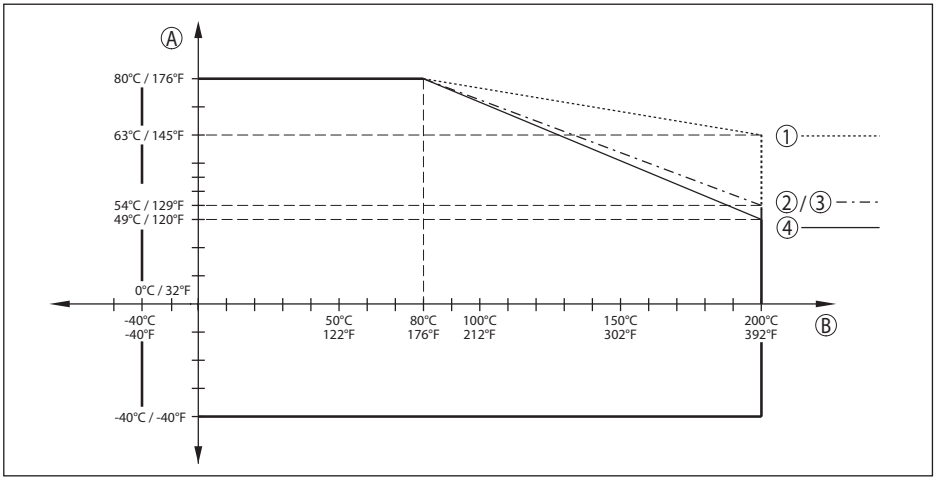

Fig. 73: Derating, ambient temperature, flange with lens antenna up to +200 °C (+392 °F)

A Ambient temperature
B Process temperature
1 Aluminium housing
2 Stainless steel housing (precision casting)
3 Plastic housing
4 Stainless steel housing (electropolished)

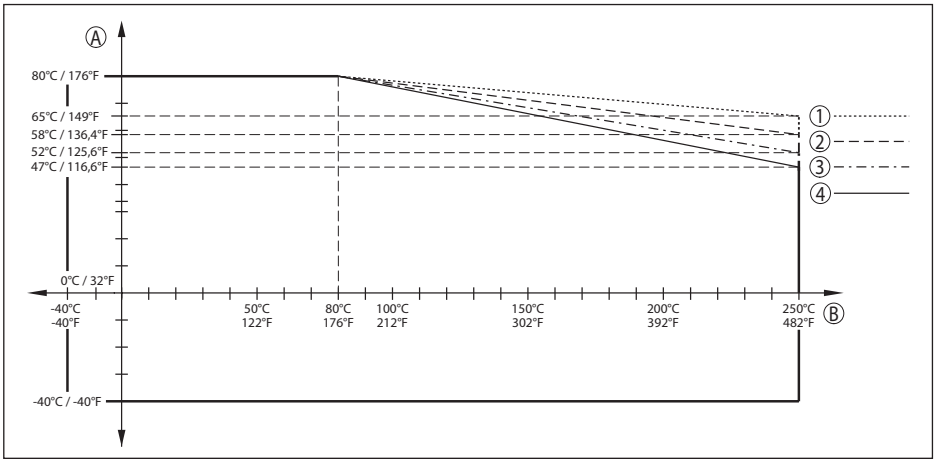

Fig. 74: Derating, ambient temperature, flange with lens antenna up to +250 °C (+482 °F)

A Ambient temperature
B Process temperature
1 Aluminium housing
2 Stainless steel housing (precision casting)
3 Plastic housing
4 Stainless steel housing (electropolished)

Process pressure

Process fitting	Version	Process pressure
Plastic horn antenna	Compression flange	-1 … 2 bar (-100 … 200 kPa/-14.5 … 29.1 psig)
	Adapter flange	-1 … 1 bar (-100 … 100 kPa/-14.5 … 14.5 psig)
Thread with integrated antenna system		-1 … 20 bar (-100 … 2000 kPa/-14.5 … 290.1 psig)
Flange with plastic plating	PN 6	-1 … 6 bar (-100 … 600 kPa/-14.5 … 87 psig)
	PN 16 (300 lb)	-1 … 16 bar (-100 … 1600 kPa/-14.5 … 232 psig)
	PN 40 (600 lb)	-1 … 25 bar (-100 … 2500 kPa/-14.5 … 362.6 psig)
	PN 64 (900 lb)	
	PN 40 (600 lb) Version -196 … +200 °C (-320.8 … +392 °F)	
	PN 64 (900 lb) Version -196 … +200 °C (-320.8 … +392 °F)	
Hygienic fitting	SMS	-1 … 6 bar (-100 … 600 kPa/-14.5 … 87 psig)
	Varivent Clamp 3", 3½", 4"	-1 … 10 bar (-100 … 1000 kPa/-14.5 … 145 psig)
	Remaining hygienic fittings	-1 … 16 bar (-100 … 1600 kPa/-14.5 … 232 psig)
Flange with lens antenna		-1 … 3 bar (-100 … 300 kPa/-14.5 … 43.5 psig)

Vessel pressure relating to the flange nominal pressure stage	see supplementary instructions manual " *Flanges according to DIN-EN-ASME-JIS*"

Mechanical stress

Vibration resistance	
– Plastic horn antenna (with adapter flange)	2 g at 5 … 200 Hz according to EN 60068-2-6 (vibration with resonance)
– Plastic horn antenna (with mounting strap)	1 g at 5 … 200 Hz according to EN 60068-2-6 (vibration with resonance)
– Thread with integrated antenna system, flange with plastic plating	4 g at 5 … 200 Hz according to EN 60068-2-6 (vibration with resonance)
– Flange with lens antenna	4 g at 5 … 200 Hz according to EN 60068-2-6 (vibration with resonance)
Shock resistance	100 g, 6 ms according to EN 60068-2-27 (mechanical shock)

Data on rinsing air connection

Recommended max. pressure with continuous rinsing	1 bar (14.50 psig)
Max. permissible pressure	6 bar (87.02 psig)
Air quality	Filtered
Air volume, depending on pressure	

Plastic horn antenna	Air volume	
Pressure	**Without reflux valve**	**With reflux valve**
0.2 bar (2.9 psig)	3.3 m³/h	-
0.4 bar (5.8 psig)	5 m³/h	-
0.6 bar (8.7 psig)	6 m³/h	1 m³/h
0.8 bar (11.6 psig)	-	2.1 m³/h
1 bar (14.5 psig)	-	3 m³/h
1.2 bar (17.4 psig)	-	3.5 m³/h
1.4 bar (20.3 psig)	-	4.2 m³/h
1.6 bar (23.2 psig)	-	4.4 m³/h
1.8 bar (20.3 psig)	-	4.8 m³/h
2 bar (23.2 psig)	-	5.1 m³/h

Flange with lens antenna	Air volume	
Pressure	**Without reflux valve**	**With reflux valve**
0.2 bar (2.9 psig)	1.7 m³/h	-
0.4 bar (5.8 psig)	2.5 m³/h	-
0.6 bar (8.7 psig)	2.9 m³/h	0.8 m³/h
0.8 bar (11.6 psig)	3.3 m³/h	1.5 m³/h
1 bar (14.5 psig)	3.6 m³/h	2 m³/h
1.2 bar (17.4 psig)	3.9 m³/h	2.3 m³/h
1.4 bar (20.3 psig)	4 m³/h	2.7 m³/h
1.6 bar (23.2 psig)	4.3 m³/h	3 m³/h
1.8 bar (20.3 psig)	4.5 m³/h	3.5 m³/h
2 bar (23.2 psig)	4.6 m³/h	4 m³/h

Connection

- Thread — G⅛
- Seal at flange with lens antenna — Threaded plug of 316Ti

Reflux valve (optional, is absolutely necessary for Ex applications)

- Material — 316Ti
- Thread — G⅛
- Seal — FKM (SHS FPM 70C3 GLT), EPDM (COG AP310)
- For connection — G⅛
- Opening pressure — 0.5 bar (7.25 psig)
- Nominal pressure stage — PN 250

Electromechanical data - version IP66/IP67 and IP66/IP68 (0.2 bar)

Options of the cable entry

- Cable entry — M20 x 1.5; ½ NPT

- Cable gland — M20 x 1.5; ½ NPT (cable ø see below table)
- Blind plug — M20 x 1.5; ½ NPT
- Closing cap — ½ NPT

Material cable gland	Material seal insert	Cable diameter				
		4.5 … 8.5 mm	5 … 9 mm	6 … 12 mm	7 … 12 mm	10 … 14 mm
PA	NBR	-	●	●	-	●
Brass, nickel-plated	NBR	●	●	●	-	-
Stainless steel	NBR	-	●	●	-	●

Wire cross-section (spring-loaded terminals)

- Massive wire, stranded wire — 0.2 … 2.5 mm² (AWG 24 … 14)
- Stranded wire with end sleeve — 0.2 … 1.5 mm² (AWG 24 … 16)

Electromechanical data - version IP66/IP68 (1 bar)

Options of the cable entry

- Cable gland with integrated connection cable — M20 x 1.5 (cable ø 5 … 9 mm)
- Cable entry — ½ NPT
- Blind plug — M20 x 1.5; ½ NPT

Connection cable

- Wire cross-section — 0.5 mm² (AWG 20)
- Wire resistance — < 0.036 Ω/m
- Tensile strength — < 1200 N (270 lbf)
- Standard length — 5 m (16.4 ft)
- Max. length — 180 m (590.6 ft)
- Min. bending radius (at 25 °C/77 °F) — 25 mm (0.984 in)
- Diameter — approx. 8 mm (0.315 in)
- Colour - Non-Ex version — Black
- Colour - Ex-version — Blue

Interface to the external display and adjustment unit

Data transmission — Digital (I²C-Bus)

Connection cable — Four-wire

Sensor version	Configuration, connection cable	
	Max. cable length	Shielded
4 … 20 mA/HART	50 m	●

Integrated clock

Date format — Day.Month.Year

Time format	12 h/24 h
Time zone, factory setting	CET
Max. rate deviation	10.5 min/year

Additional output parameter - Electronics temperature

Range	-40 … +85 °C (-40 … +185 °F)
Resolution	< 0.1 K
Deviation	± 3 K
Availability of the temperature values	
– Indication	Via the display and adjustment module
– Output	Via the respective output signal

Voltage supply, sensor

Operating voltage U_B	12 … 35 V DC
Operating voltage U_B with lighting switched on	18 … 35 V DC
Reverse voltage protection	Integrated
Permissible residual ripple	
– for 12 V < U_B < 18 V	≤ 0.7 V_{eff} (16 … 400 Hz)
– for 18 V < U_B < 35 V	≤ 1 V_{eff} (16 … 400 Hz)
Load resistor	
– Calculation	(U_B - U_{min})/0.022 A
– Example - U_B= 24 V DC	(24 V - 12 V)/0.022 A = 545 Ω

Potential connections and electrical separating measures in the instrument

Electronics	Not non-floating
Reference voltage [26]	500 V AC
Conductive connection	Between ground terminal and metallic process fitting

Electrical protective measures

Housing material	Version	Protection acc. to IEC 60529	Protection acc. to NEMA
Plastic	Single chamber	IP66/IP67	Type 4X
	Double chamber	IP66/IP67	Type 4X
Aluminium	Single chamber	IP66/IP68 (0.2 bar) IP68 (1 bar)	Type 6P -
	Double chamber	IP66/IP68 (0.2 bar) IP68 (1 bar)	Type 6P -
Stainless steel (electro-polished)	Single chamber	IP66/IP68 (0.2 bar)	Type 6P
		IP69K	Type 6P

[26] Galvanic separation between electronics and metal housing parts

Housing material	Version	Protection acc. to IEC 60529	Protection acc. to NEMA
Stainless steel (precision casting)	Single chamber	IP66/IP68 (0.2 bar) IP68 (1 bar)	Type 6P -
	Double chamber	IP66/IP68 (0.2 bar) IP68 (1 bar)	Type 6P -

Connection of the feeding power supply unit	Networks of overvoltage category III
Altitude above sea level	
– by default	up to 2000 m (6562 ft)
– with connected overvoltage protection	up to 5000 m (16404 ft)
Pollution degree (with fulfilled housing protection)	4
Protection rating (IEC 61010-1)	III

14.2 Radio astronomy stations

Certain restrictions on the use of VEGAPULS 6X outside closed vessels result from the radio license. You can find these restrictions in chapter " *Radio license for Europe*". Some of these restrictions have to do radio astronomy stations. The following table states the geographic positions of radio astronomy stations in Europe:

Country	Name of the Station	Geographic Latitude	Geographic Longitude
Finland	Metsähovi	60°13'04'' N	24°23'37'' E
France	Plateau de Bure	44°38'01'' N	05°54'26'' E
Germany	Effelsberg	50°31'32'' N	06°53'00'' E
Italy	Sardinia	39°29'50" N	09°14'40" E
Spain	Yebes	40°31'27" N	03°05'22" W
	Pico Veleta	37°03'58" N	03°23'34" W
Sweden	Onsala	57°23'45" N	11°55'35" E

14.3 Dimensions

The following dimensional drawings represent only an extract of all possible versions. Detailed dimensional drawings can be downloaded at www.vega.com/downloads under " *Drawings*".

Plastic housing

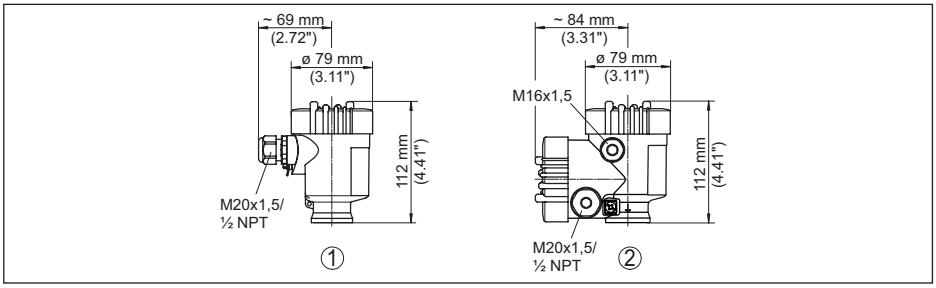

Fig. 75: Housing versions in protection IP66/IP67 (with integrated display and adjustment module the housing is 9 mm/0.35 in higher)

1 Plastic single chamber
2 Plastic double chamber

Aluminium housing

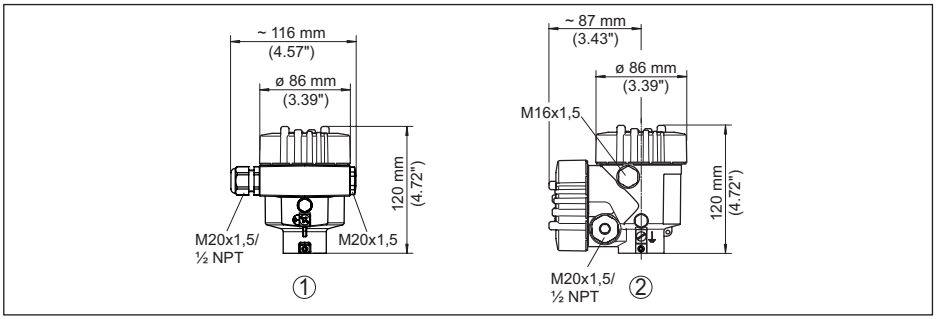

Fig. 76: Housing versions with protection rating IP66/IP68 (0.2 bar), (with integrated display and adjustment module the housing is 18 mm/0.71 in higher)

1 Aluminium - single chamber
2 Aluminium - double chamber

Aluminium housing with protection rating IP66/IP68, 1 bar

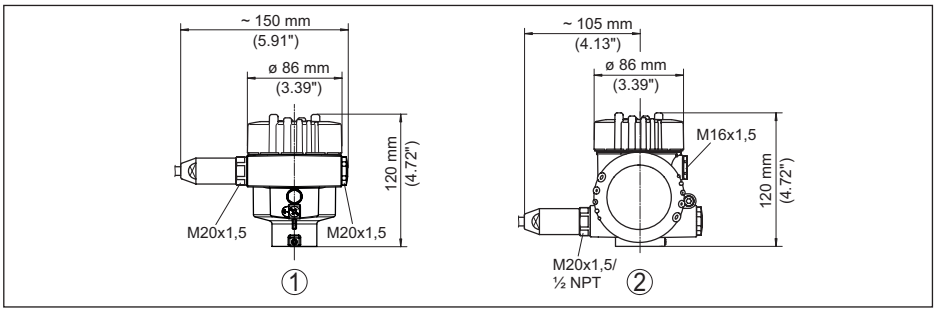

Fig. 77: Housing version with protection rating IP66/IP68 (1 bar), (with integrated display and adjustment module the housing is 18 mm/0.71 in higher)

1 Aluminium - single chamber

Stainless steel housing

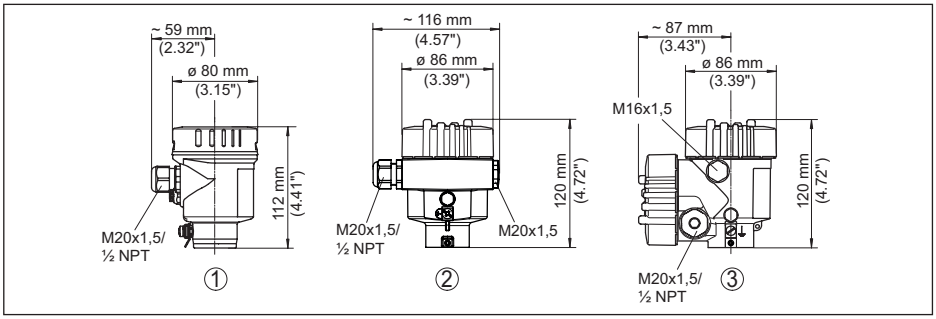

Fig. 78: Housing versions with protection rating IP66/IP68 (0.2 bar), (with integrated display and adjustment module the housing is 18 mm/0.71 in higher)

1 *Stainless steel single chamber (electropolished)*
2 *Stainless steel single chamber (precision casting)*
3 *Stainless steel double chamber housing (precision casting)*

Stainless steel housing with protection rating IP66/IP68, 1 bar

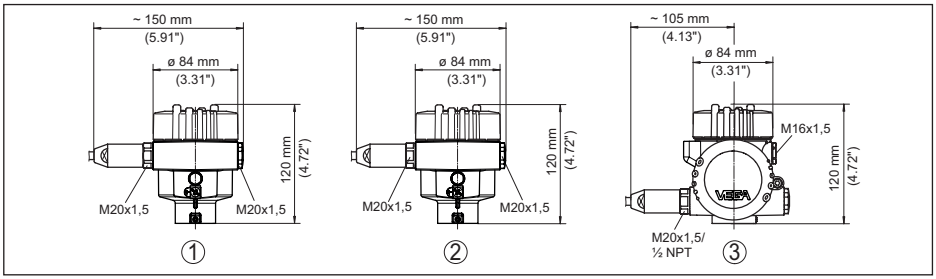

Fig. 79: Housing version with protection rating IP66/IP68 (1 bar), (with integrated display and adjustment module the housing is 18 mm/0.71 in higher)

1 *Stainless steel single chamber (electropolished)*
2 *Stainless steel single chamber (precision casting)*
3 *Stainless steel double chamber housing (precision casting)*

VEGAPULS 6X, plastic horn antenna with compression flange

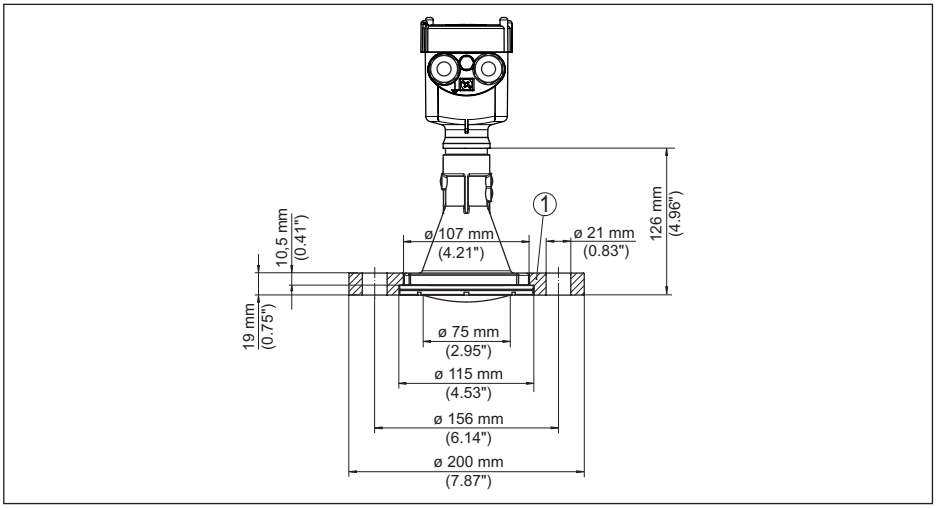

Fig. 80: Radar sensor with compression flange suitable for 3" 150 lbs, DN 80 PN 16

1 Compression flange

VEGAPULS 6X, plastic horn antenna with compression flange and purging air connection

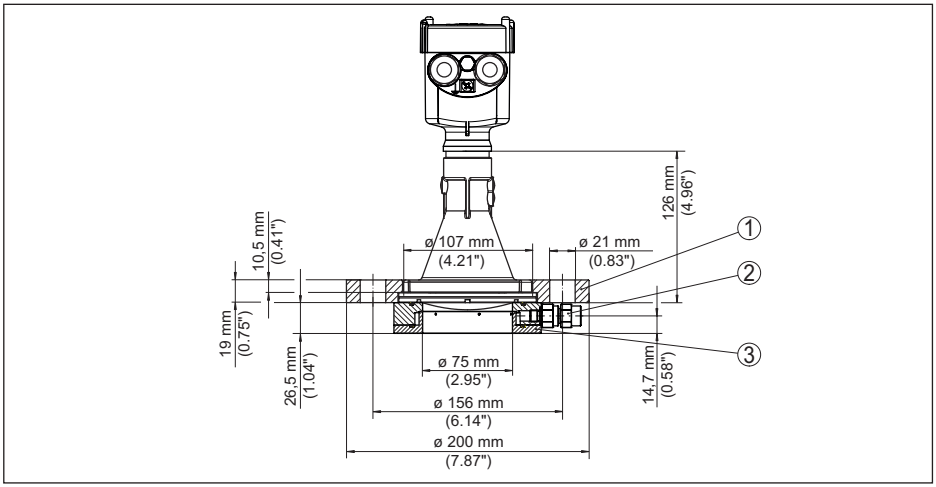

Fig. 81: Radar sensor with compression flange and purging air connection suitable for 3" 150 lbs, DN 80 PN 16

1 Compression flange
2 Reflux valve
3 Rinsing air connection

VEGAPULS 6X, plastic horn antenna with adapter flange

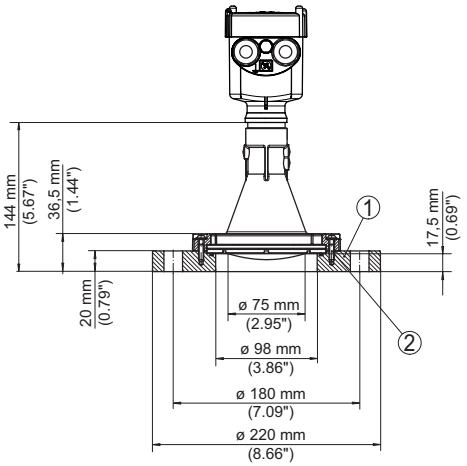

Fig. 82: Radar sensor with adapter flange DN 100 PN 6

1 *Adapter flange*
2 *Process seal*

VEGAPULS 6X, plastic horn antenna mit adapter flange und purging air connection

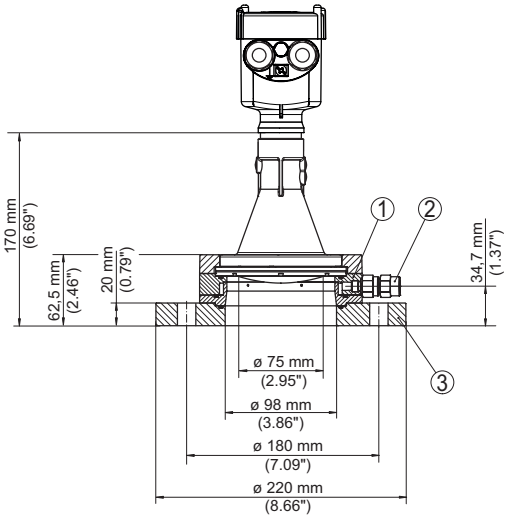

Fig. 83: VEGAPULS 6X, adapter flange and purging air connection DN 100 PN 6

1 *Rinsing air connection*
2 *Reflux valve*
3 *Adapter flange*

VEGAPULS 6X, plastic horn antenna with mounting strap

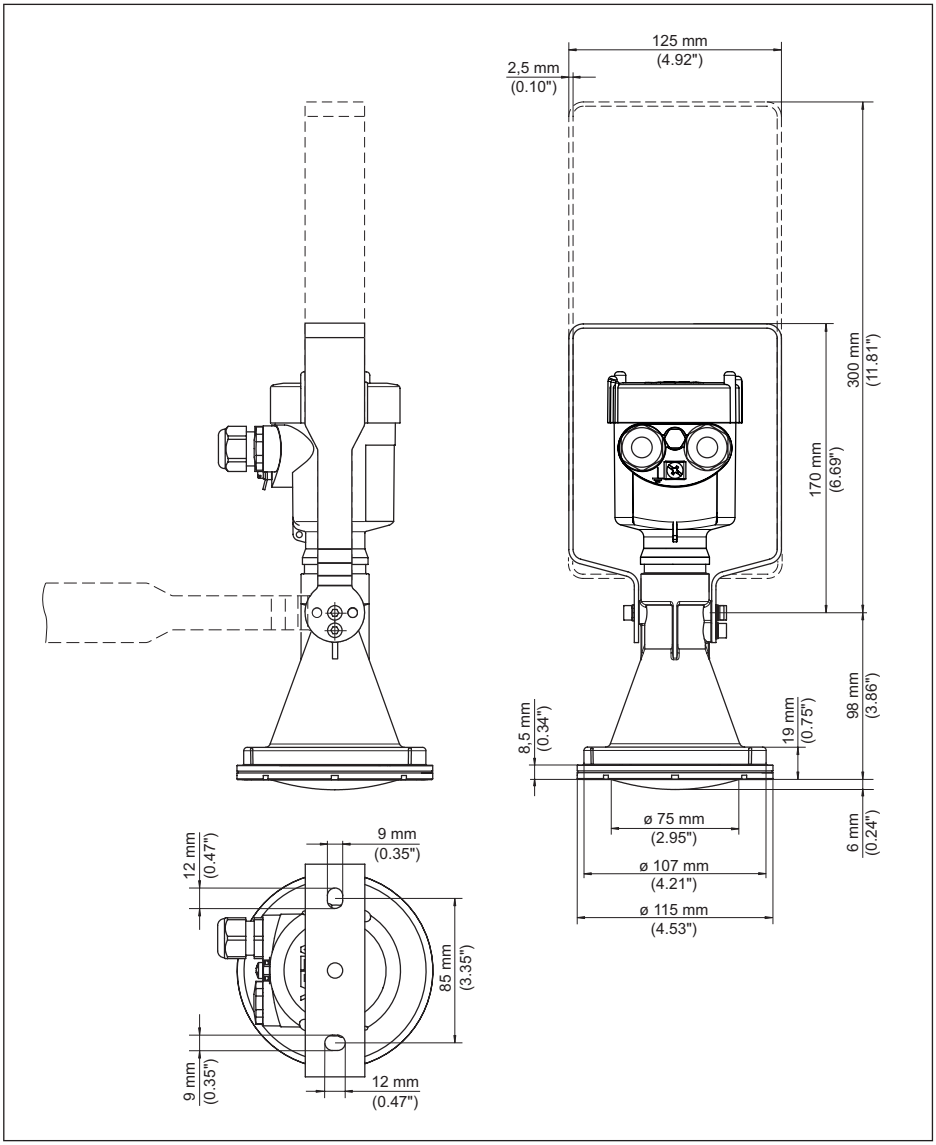

Fig. 84: VEGAPULS 6X, plastic horn antenna, mounting strap in 170 or 300 mm length

66101-EN-211011

VEGAPULS 6X, thread with integrated antenna system up to +150 °C (+302 °F)

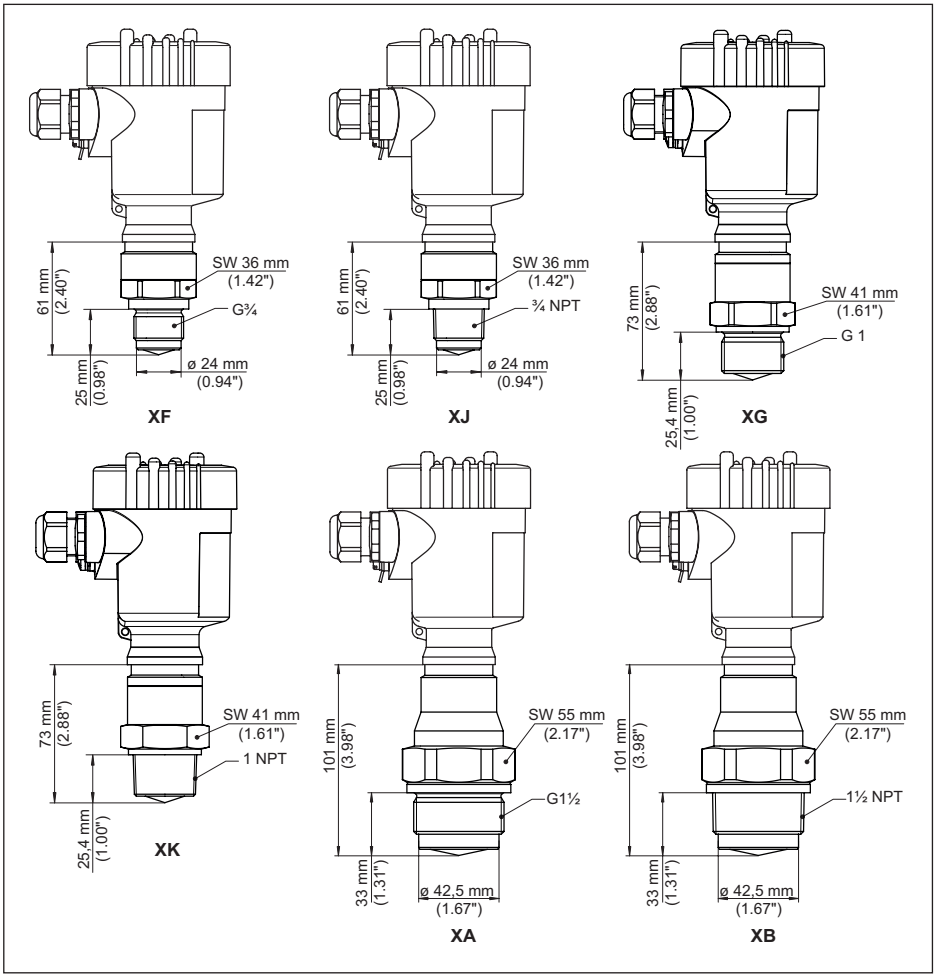

Fig. 85: VEGAPULS 6X, thread with integrated antenna system up to +150 °C (+302 °F)

XF G¾ (DIN 3852-E)
XJ ¾ NPT (ASME B1.20.1)
XG G1 (DIN 3852-A)
XK 1 NPT (ASME B1.20.1)
XA G1½ (DIN 3852-A)
XB 1½ NPT (ASME B1.20.1)

VEGAPULS 6X, thread with integrated antenna system up to +250 °C (+482 °F)

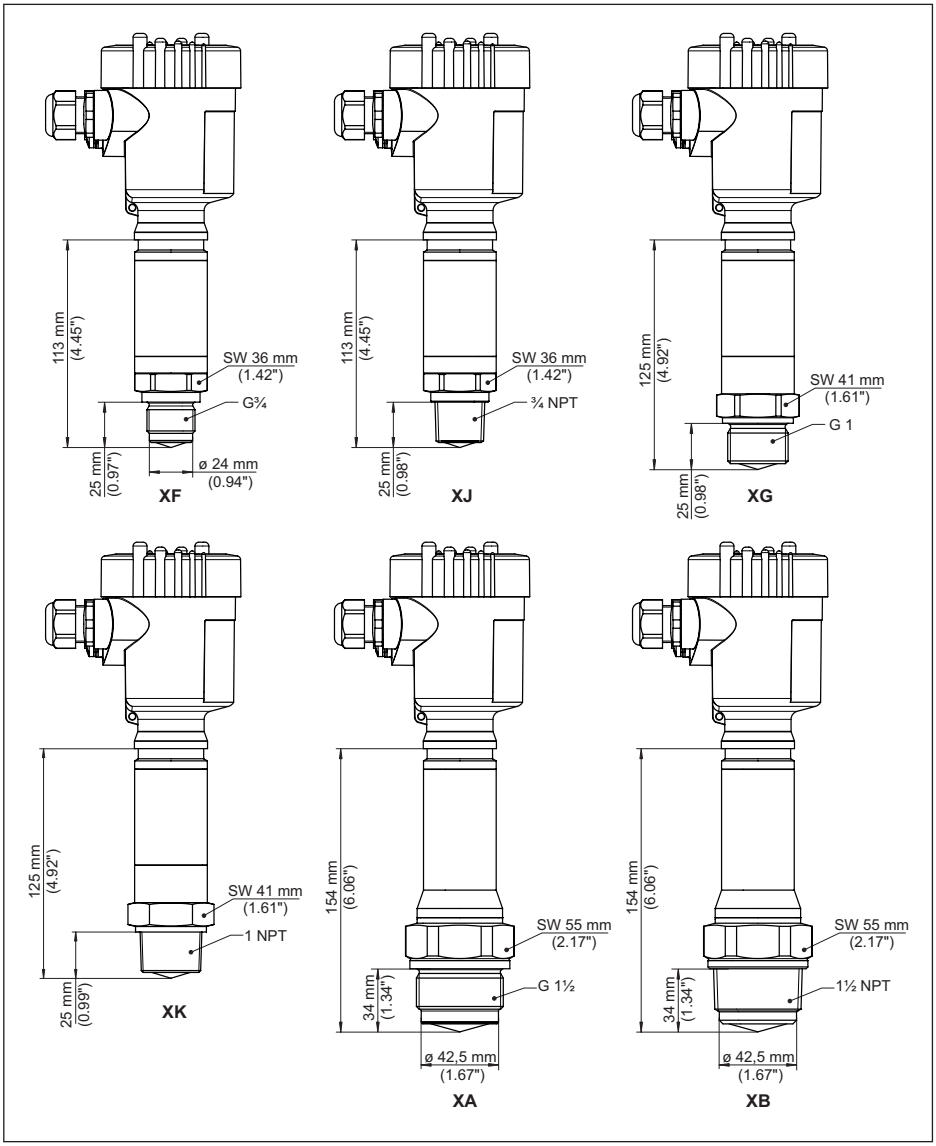

Fig. 86: VEGAPULS 6X, thread with integrated antenna system up to +250 °C (+482 °F)

XF G¾ (DIN 3852-E)
XJ ¾ NPT (ASME B1.20.1)
XG G1 (DIN 3852-A)
XK 1 NPT (ASME B1.20.1)
XA G1½ (DIN 3852-A)
XB 1½ NPT (ASME B1.20.1)

VEGAPULS 6X, flange with plastic plating

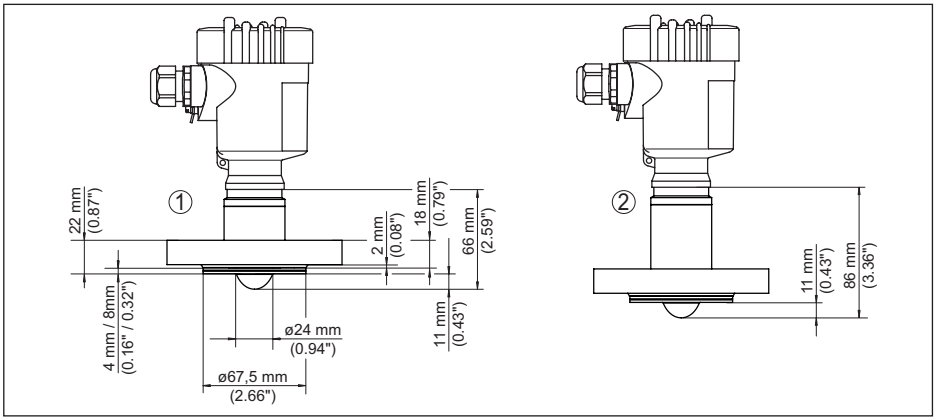

Fig. 87: VEGAPULS 6X, encapsulated antenna system DN 25 PN 40

1 Version up to +150 °C (+302 °F)
2 Version up to +200 °C (+392 °F)

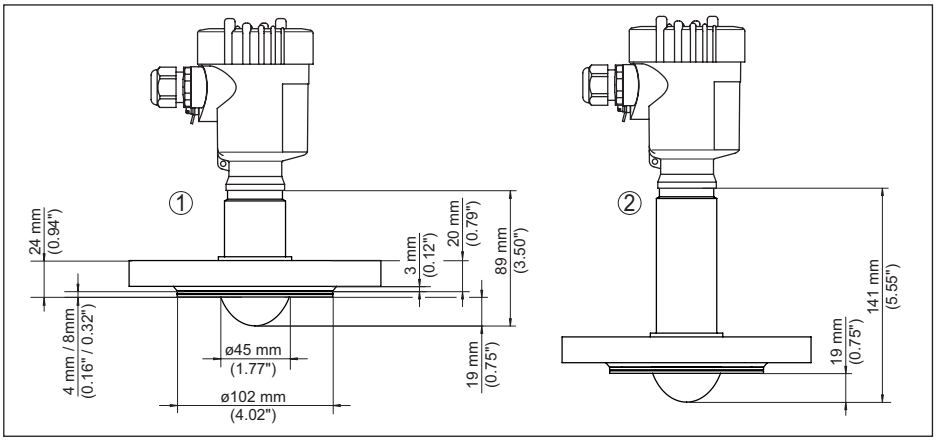

Fig. 88: VEGAPULS 6X, encapsulated antenna system DN 50 PN 40

1 Version up to +150 °C (+302 °F)
2 Version up to +200 °C (+392 °F)

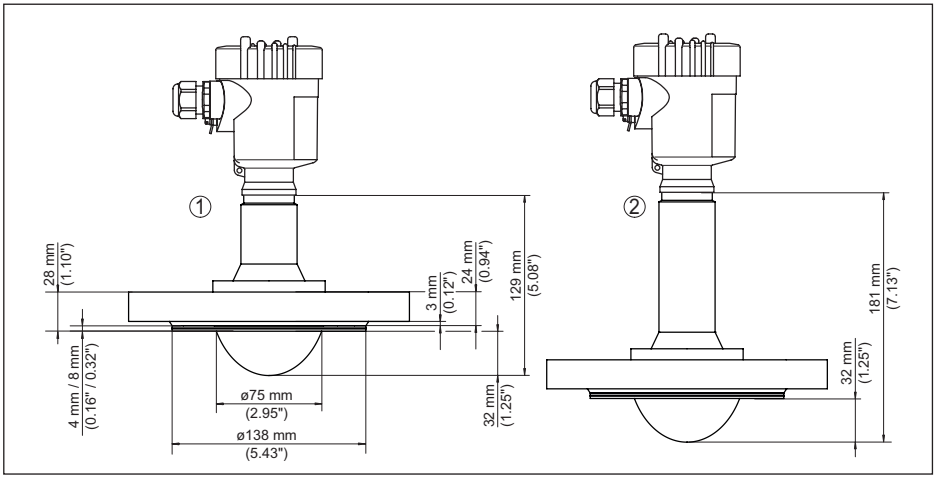

Fig. 89: VEGAPULS 6X, encapsulated antenna system DN 80 PN 40

1 Version up to +150 °C (+302 °F)
2 Version up to +200 °C (+392 °F)

VEGAPULS 6X, hygienic fitting

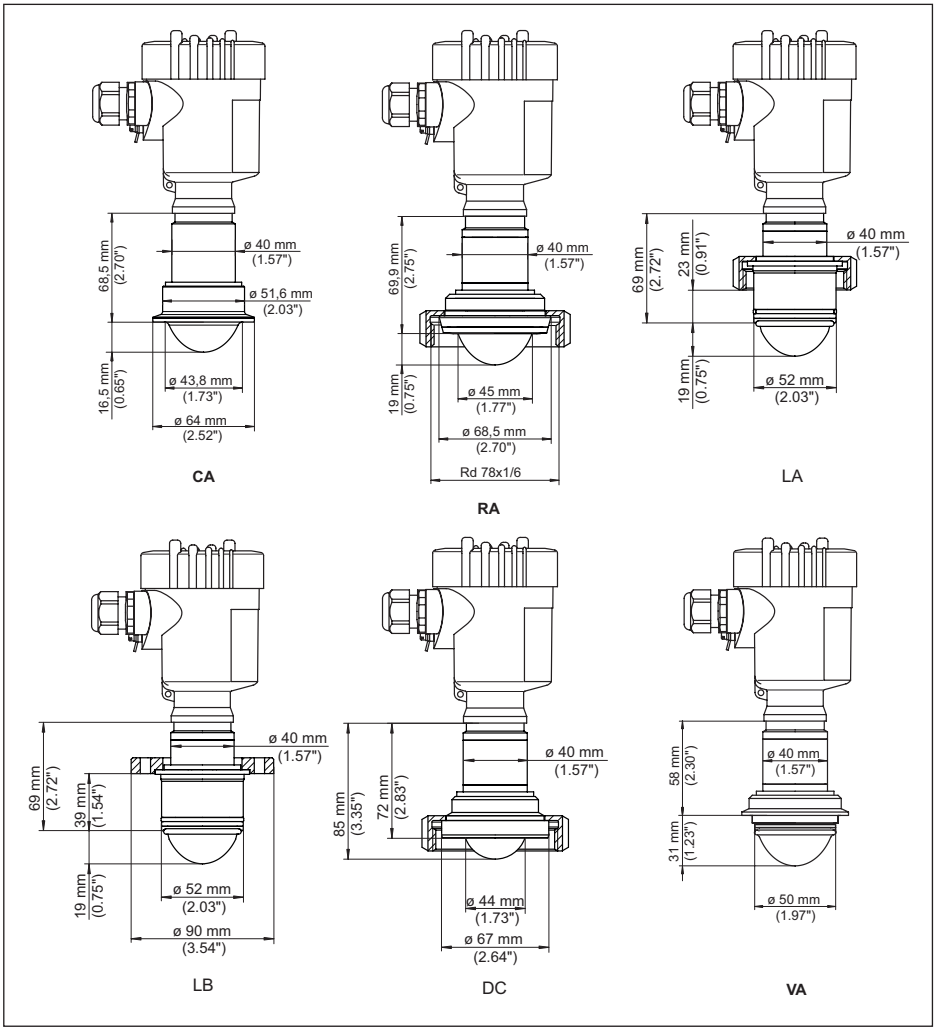

Fig. 90: VEGAPULS 6X, hygienic fitting

CA Clamp 2" PN 16 (DIN 32676, ISO 2852)
CE Clamp 3½" PN 16 (DIN 32676, ISO 2852)
RA Slotted nut DN 50 PN 16 (DIN 11851)
RD Slotted nut DN 100 PN 16 (DIN 11851)

VEGAPULS 6X, flange with lens antenna

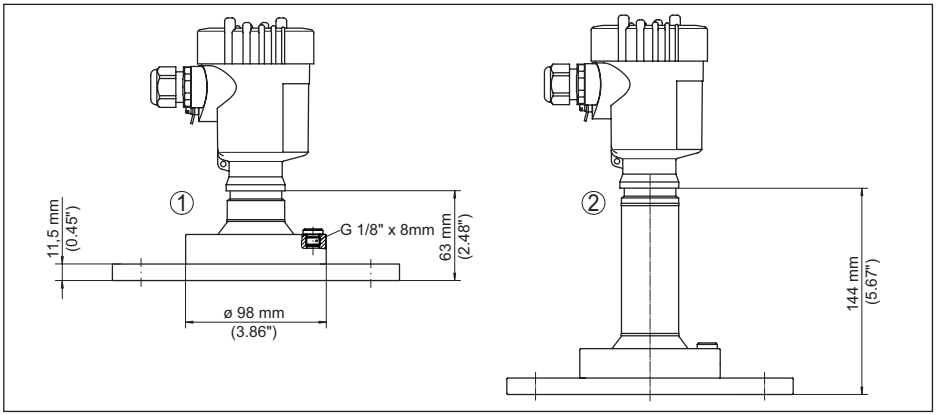

Fig. 91: VEGAPULS 6X, flange with lens antenna (flange thickness acc. to drawing, flange dimensions acc. to DIN, ASME, JIS)

1 *Version up to +150 °C (+302 °F)*
2 *Version up to +250 °C (+482 °F)*

VEGAPULS 6X, flange with lens antenna and purging air connection

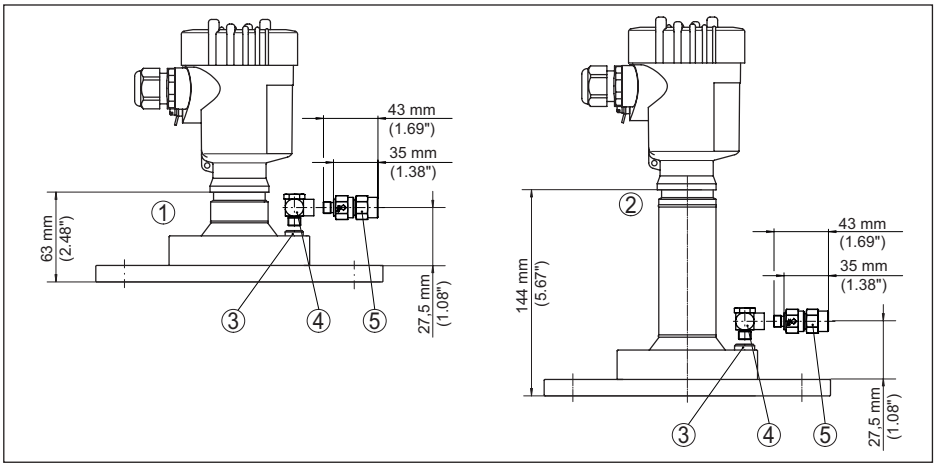

Fig. 92: VEGAPULS 6X, flange with lens antenna and purging air connection

1 *Version up to +150 °C (+302 °F)*
2 *Version up to +250 °C (+482 °F)*
3 *Blind plug*
4 *90° angle joint*
5 *Reflux valve*

VEGAPULS 6X, flange with lens antenna and swivelling holder

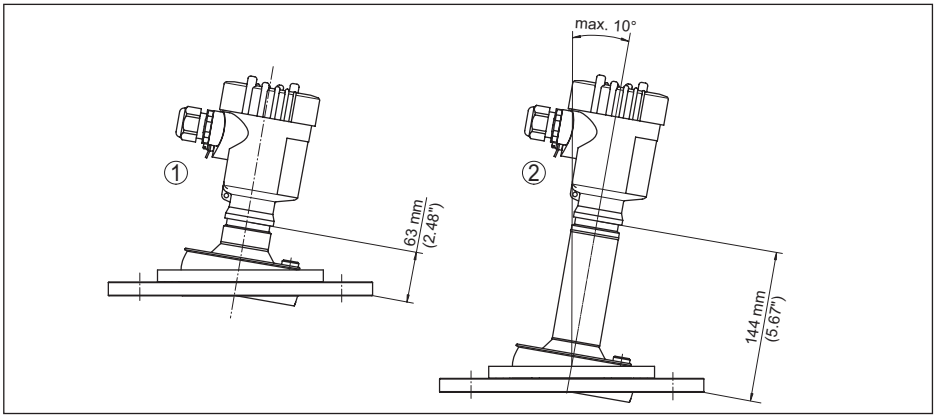

Fig. 93: VEGAPULS 6X, flange with lens antenna and swivelling holder

1 *Version up to +150 °C (+302 °F)*
2 *Version up to +250 °C (+482 °F)*

VEGAPULS 6X, flange with lens antenna, swivelling holder and purging air connection

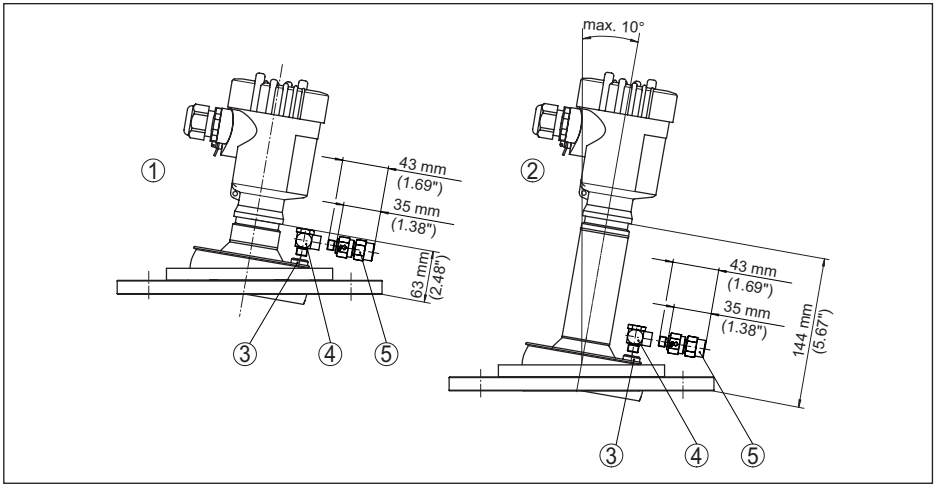

Fig. 94: VEGAPULS 6X, flange with lens antenna, swivelling holder and purging air connection

1 *Version up to +150 °C (+302 °F)*
2 *Version up to +250 °C (+482 °F)*
3 *Blind plug*
4 *90° angle joint*
5 *Reflux valve*

14.4 Industrial property rights

VEGA product lines are global protected by industrial property rights. Further information see www.vega.com.

VEGA Produktfamilien sind weltweit geschützt durch gewerbliche Schutzrechte.

Nähere Informationen unter www.vega.com.

Les lignes de produits VEGA sont globalement protégées par des droits de propriété intellectuelle. Pour plus d'informations, on pourra se référer au site www.vega.com.

VEGA lineas de productos están protegidas por los derechos en el campo de la propiedad industrial. Para mayor información revise la pagina web www.vega.com.

Линии продукции фирмы ВЕГА защищаются по всему миру правами на интеллектуальную собственность. Дальнейшую информацию смотрите на сайте www.vega.com.

VEGA系列产品在全球享有知识产权保护。

进一步信息请参见网站< www.vega.com。

14.5 Licensing information for open source software

Open source software components are also used in this device. A documentation of these components with the respective license type, the associated license texts, copyright notes and disclaimers can be found on our homepage.

14.6 Trademark

All the brands as well as trade and company names used are property of their lawful proprietor/originator.

Printing date:

All statements concerning scope of delivery, application, practical use and operating conditions of the sensors and processing systems correspond to the information available at the time of printing.
Subject to change without prior notice

© VEGA Grieshaber KG, Schiltach/Germany 2021

66101-EN-211011

VEGA Grieshaber KG
Am Hohenstein 113
77761 Schiltach
Germany

Phone +49 7836 50-0
E-mail: info.de@vega.com
www.vega.com