Appendix K: Manual

Please refer to the following pages.

Operating Instructions

Radar sensor for continuous level measurement of water and wastewater

VEGAPULS WL 61

4 … 20 mA/HART - two-wire

Document ID: 38061

Contents

1 About this document
1.1 Function ... 4
1.2 Target group ... 4
1.3 Symbolism used ... 4

2 For your safety
2.1 Authorised personnel ... 5
2.2 Appropriate use ... 5
2.3 Warning about incorrect use ... 5
2.4 General safety instructions ... 5
2.5 CE conformity ... 6
2.6 NAMUR recommendations ... 6
2.7 Radio license for Europe ... 6
2.8 FCC & IC Certification ... 6
2.9 Environmental instructions ... 7

3 Product description
3.1 Configuration ... 8
3.2 Principle of operation ... 9
3.3 Packaging, transport and storage ... 9
3.4 Accessories and replacement parts ... 10

4 Mounting
4.1 General instructions ... 11
4.2 Mounting versions ... 11
4.3 Mounting preparations, mounting strap ... 13
4.4 Instructions for installation ... 14

5 Connecting to power supply
5.1 Preparing the connection ... 20
5.2 Wiring plan ... 20
5.3 Switch-on phase ... 20

6 Set up with VEGADIS 62
6.1 Connection ... 22
6.2 Adjust the sensor ... 22
6.3 Scale the indication ... 23

7 Setup with PACTware
7.1 Connect the PC ... 25
7.2 Parameter adjustment with PACTware ... 26
7.3 Saving the parameter adjustment data ... 29

8 Set up with other systems
8.1 DD adjustment programs ... 30
8.2 Communicator 375, 475 ... 30

9 Diagnosis, Asset Management and service
9.1 Maintenance ... 31
9.2 Measured value and event memory ... 31
9.3 Asset Management function ... 32
9.4 Rectify faults ... 35
9.5 Software update ... 39

9.6 How to proceed in case of repair 39

10 Dismounting

10.1 Dismounting steps 41
10.2 Disposal 41

11 Supplement

11.1 Technical data 42
11.2 Radio astronomy stations 47
11.3 Dimensions 48

Safety instructions for Ex areas

Please note the Ex-specific safety information for installation and operation in Ex areas. These safety instructions are part of the operating instructions manual and come with the Ex-approved instruments.

Editing status: 2012-09-27

1 About this document

1.1 Function

This operating instructions manual provides all the information you need for mounting, connection and setup as well as important instructions for maintenance and fault rectification. Please read this information before putting the instrument into operation and keep this manual accessible in the immediate vicinity of the device.

1.2 Target group

This operating instructions manual is directed to trained qualified personnel. The contents of this manual should be made available to these personnel and put into practice by them.

1.3 Symbolism used

Information, tip, note
This symbol indicates helpful additional information.

Caution: If this warning is ignored, faults or malfunctions can result.

Warning: If this warning is ignored, injury to persons and/or serious damage to the instrument can result.

Danger: If this warning is ignored, serious injury to persons and/or destruction of the instrument can result.

Ex applications
This symbol indicates special instructions for Ex applications.

• **List**
The dot set in front indicates a list with no implied sequence.

→ **Action**
This arrow indicates a single action.

1 **Sequence**
Numbers set in front indicate successive steps in a procedure.

Battery disposal
This symbol indicates special information about the disposal of batteries and accumulators.

2 For your safety

2.1 Authorised personnel

All operations described in this operating instructions manual must be carried out only by trained specialist personnel authorised by the plant operator.

During work on and with the device the required personal protective equipment must always be worn.

2.2 Appropriate use

VEGAPULS WL 61 is a sensor for continuous level measurement.

You can find detailed information on the application range in chapter "*Product description*".

Operational reliability is ensured only if the instrument is properly used according to the specifications in the operating instructions manual as well as possible supplementary instructions.

2.3 Warning about incorrect use

Inappropriate or incorrect use of the instrument can give rise to application-specific hazards, e.g. vessel overfill or damage to system components through incorrect mounting or adjustment.

2.4 General safety instructions

This is a state-of-the-art instrument complying with all prevailing regulations and guidelines. The instrument must only be operated in a technically flawless and reliable condition. The operator is responsible for the trouble-free operation of the instrument.

During the entire duration of use, the user is obliged to determine the compliance of the necessary occupational safety measures with the current valid rules and regulations and also take note of new regulations.

The safety instructions in this operating instructions manual, the national installation standards as well as the valid safety regulations and accident prevention rules must be observed by the user.

For safety and warranty reasons, any invasive work on the device beyond that described in the operating instructions manual may be carried out only by personnel authorised by the manufacturer. Arbitrary conversions or modifications are explicitly forbidden.

The safety approval markings and safety tips on the device must also be observed.

Depending on the instrument version, the emitting frequencies are in the C or K band range. The low emitting frequencies are far below the internationally approved limit values. When used correctly, there is no danger to health.

2.5 CE conformity

The device fulfills the legal requirements of the applicable EC guidelines. By affixing the CE marking, we confirm successful testing of the product.

You can find the conformity certificate in the download section of our homepage.

2.6 NAMUR recommendations

NAMUR is the automation technology user association in the process industry in Germany. The published NAMUR recommendations are accepted as the standard in field instrumentation.

The device fulfills the requirements of the following NAMUR recommendations:

- NE 43 – Signal level for malfunction information from measuring transducers
- NE 53 – Compatibility of field devices and indicating/adjustment components
- NE 107 - Self-monitoring and diagnosis of field devices

For further information see www.namur.de.

2.7 Radio license for Europe

The instrument meets the LPR (Level Probing Radar) radio standard EN 302729-1/2. It is approved for unrestricted use inside and outside of closed vessels in countries of the EU and EFTA that have implemented this standard: Austria, Belgium, Bulgaria, Germany, Denmark, Estonia, France, Greece, Great Britain, Ireland, Island, Italy, Liechtenstein, Lithuania, Latvia, Luxembourg, Malta, Netherlands, Norway, Poland, Portugal, Romania, Sweden, Switzerland, Slovakia, Slovenia, Spain, Czech Republik and Cyprus.

Not included in the CE confirmity declaration are the countries implementing this radio standard at a later date: Finland and Hungary.

For operation outside of closed vessels, the following conditions must be fulfilled:

- The installation must be carried out by trained qualified personnel
- The instrument must be stationary mounted and the antenna directed vertically downward
- The mounting location must be at least 4 km away from the radio astronomy stations listed in the supplement, unless special permission was granted by the responsible national approval authority
- When installed within 4 to 40 km of one of the radio astronomy stations listed in the supplyment, the instrument must not be mounted higher than 15 m above the ground.

2.8 FCC & IC Certification

The instrument is in conformity with part 15 of the FCC regulations.

Operation is subject to the following two conditions:

- this device may not cause harmful interference, and

- this device must accept any interference received, including interference that may cause undesired operation.
- the antenna must be directed vertically downward

FCC requirements limit this device to be used only in a fixed installation, never in a portable installation or in installations that arein motion (i.e. cement trucks, etc.).

Changes or modifications not expressly approved by the manufacturer could void the user's authority to operate the equipment.

This device complies with Industry Canada license-exempt RSS standard(s). Operation is subject to the following two conditions:

- this device may not cause interference, and
- this device must accept any interference, including interference that may cause undesired operation of the device

Le présent appareil est conforme aux CNR d'Industrie Canada applicables aux appareils radioexempts de licence. L'exploitation est autorisée aux deux conditions suivantes:

- l'appareil nedoit pas produire de brouillage , et
- l'utilisateur de l'appareil doit accepter tout brouillageradioélectrique subi, même si le brouillage est susceptible d'en compromettre le fonctionnement

2.9 Environmental instructions

Protection of the environment is one of our most important duties. That is why we have introduced an environment management system with the goal of continuously improving company environmental protection. The environment management system is certified according to DIN EN ISO 14001.

Please help us fulfil this obligation by observing the environmental instructions in this manual:

- Chapter "*Packaging, transport and storage*"
- Chapter "*Disposal*"

3 Product description

3.1 Configuration

Type label

The type label contains the most important data for identification and use of the instrument:

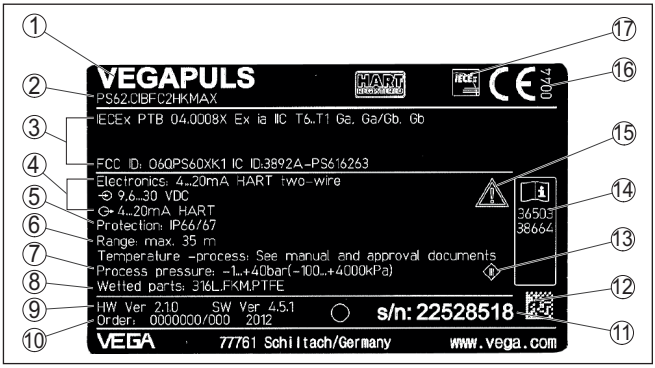

Fig. 1: Layout of the type label (example)

1 *Instrument type*
2 *Product code*
3 *Approvals*
4 *Power supply and signal output, electronics*
5 *Protection rating*
6 *Measuring range*
7 *Process and ambient temperature, process pressure*
8 *Material, wetted parts*
9 *Hardware and software version*
10 *Order number*
11 *Serial number of the instrument*
12 *Symbol of the device protection class*
13 *ID numbers, instrument documentation*
14 *Note to observe the instrument documentation*
15 *Notified authority for CE marking*
16 *Approval directive*

Serial number

With the serial number of the instrument on the type label you have access to the following data on our homepage:

- Article number of the instrument (HTML)
- Delivery date (HTML)
- Order-specific instrument features (HTML)
- Operating instructions at the time of shipment (PDF)
- Order-specific sensor data for an electronics exchange (XML)
- Test certificate "Measuring Accuracy" (PDF)

For this purpose, move to www.vega.com and "*VEGA Tools*".

Scope of this operating instructions manual

This operating instructions manual applies to the following instrument versions:

- Hardware from 1.0.0
- Software from 4.4.0

Scope of delivery

The scope of delivery encompasses:

- Radar sensor
- Compression flange (option)
- Mounting strap with fixing material (optional)
- Documentation
  - this operating instructions manual
  - Ex-specific "*Safety instructions*" (with Ex versions)
  - if necessary, further certificates

3.2 Principle of operation

Application area

The radar sensor VEGAPULS WL 61 is the ideal sensor for all applications in the water and waste water industry. It is particularly suitable for level measurement in water treatment, in pump stations as well as storm water overflow tanks, for flow measurement in open flumes and for gauge measurement.

Functional principle

The antenna of the radar sensor emits short radar pulses with a duration of approx. 1 ns. These pulses are reflected by the product and received by the antenna as echoes. The transit time of the radar pulses from emission to reception is proportional to the distance and hence to the level. The determined level is converted into an appropriate output signal and outputted as measured value.

3.3 Packaging, transport and storage

Packaging

Your instrument was protected by packaging during transport. Its capacity to handle normal loads during transport is assured by a test according to DIN EN 24180.

The packaging of standard instruments consists of environment-friendly, recyclable cardboard. For special versions, PE foam or PE foil is also used. Dispose of the packaging material via specialised recycling companies.

Transport

Transport must be carried out under consideration of the notes on the transport packaging. Nonobservance of these instructions can cause damage to the device.

Transport inspection

The delivery must be checked for completeness and possible transit damage immediately at receipt. Ascertained transit damage or concealed defects must be appropriately dealt with.

Storage

Up to the time of installation, the packages must be left closed and stored according to the orientation and storage markings on the outside.

Unless otherwise indicated, the packages must be stored only under the following conditions:

- Not in the open
- Dry and dust free
- Not exposed to corrosive media
- Protected against solar radiation
- Avoiding mechanical shock and vibration

Storage and transport temperature

- Storage and transport temperature see chapter "*Supplement - Technical data - Ambient conditions*"
- Relative humidity 20 … 85 %

3.4 Accessories and replacement parts

Interface adapter

The interface adapter VEGACONNECT enables the connection of communication-capable instruments to the USB interface of a PC. For parameter adjustment of these instruments, an adjustment software such as PACTware with VEGA-DTM is required.

You can find further information in the operating instructions "*Interface adapter VEGACONNECT*" (Document-ID 32628).

External indicating and adjustment unit with HART protocol

VEGADIS 62 is suitable for measured value indication and adjustment of sensors with HART protocol. It is looped into the 4 … 20 mA/HART signal cable.

You can find further information in the operating instructions "*VEGADIS 62*" (Document-ID 36469).

4 Mounting

4.1 General instructions

Suitability for the process conditions

Make sure that all parts of the instrument exposed to the process, in particular the active measuring component, process seal and process fitting, are suitable for the existing process conditions. These include above all the process pressure, process temperature as well as the chemical properties of the medium.

You can find the specifications in chapter "*Technical data*" and on the type label.

4.2 Mounting versions

Straining clamp

Most simply mount the instrument via the straining clamp. For this purpose, the connection cable is provided with a strain relief wire of Kevlar.

In order to avoid faulty measured values, make sure that the sensor does not oscillate.

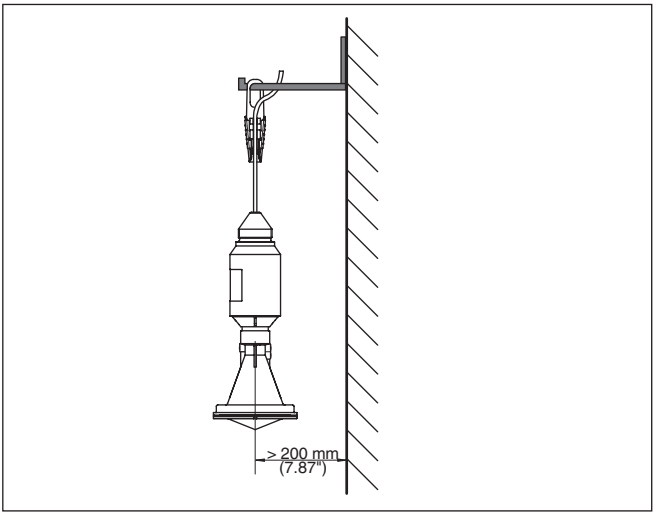

Fig. 2: Mounting via a straining clamp

Mounting bracket

For a rigid mounting, a mounting bracket with opening for thread G1½, e.g. from the VEGA product range, is recommended. The mounting of the sensor in the bracket is carried out via a G1½ counter nut of plastic. Take note of chapter "*Mounting instructions*" for the distance to the wall.

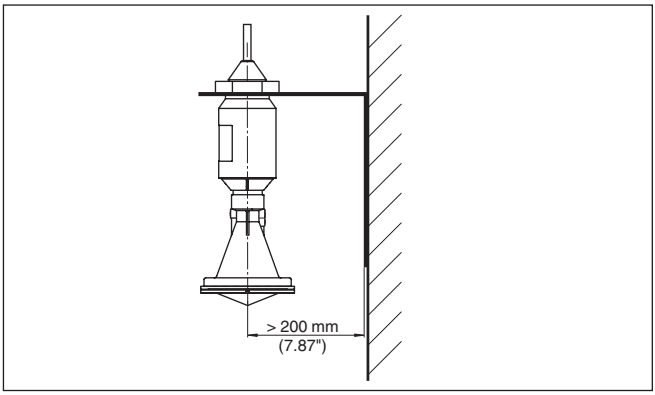

Fig. 3: Mounting via a mounting bracket

Mounting bracket

The optional mounting strap enables sensor mounting on e.g. a ceiling, wall or bracket. It is available in the following versions:

- Length 300 mm for ceiling mounting
- Length 170 mm for wall mounting

The instrument is normally mounted vertically on the ceiling.

This ensures swivelling of the sensor up to 180° for optimum orientation.

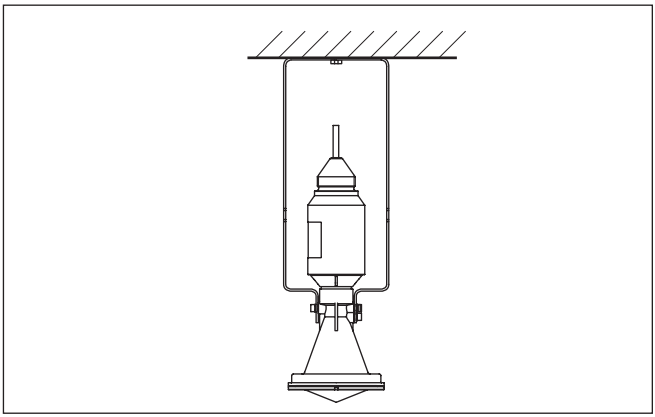

Fig. 4: Vertical mounting on the ceiling via the mounting strap with length 300 mm

As an alternative, mounting can be carried out vertically on the wall.

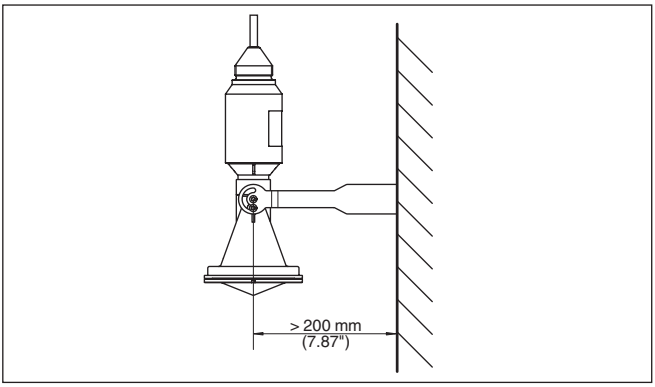

Fig. 5: Vertical mounting on the wall via the mounting strap with length 170 mm

Flange

For mounting the instrument on a socket or a manhole cover, an unassembled combination compression flange is optionally available for DN 80 (ASME 3" or JIS 80), also as a retrofitting part. As an alternative, the instrument can be already supplied with a tight, fix-mounted adapter flange from DN 100 (ASME 4" or JIS 100).

You can find drawings of these mounting options in chapter "*Dimensions*".

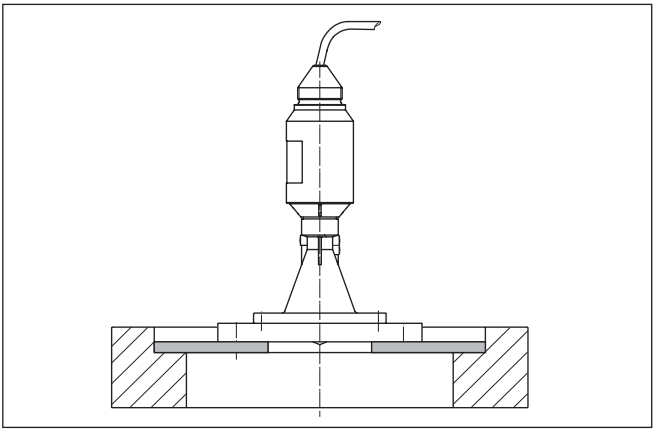

Fig. 6: Mounting by means of an adapter flange, for example, on a manhole lid.

4.3 Mounting preparations, mounting strap

The optional mounting strap is supplied unassembled. It must be screwed to the sensor before setup with the attached screws. Max. torque, see chapter "*Technical data*". Required tools: Allen wrench size 4.

There are two different ways of screwing the strap to the sensor. Depending on the selected method, the sensor can be rotated in

the strap infinitely variable through 180° or in three steps 0°, 90° and 180°.

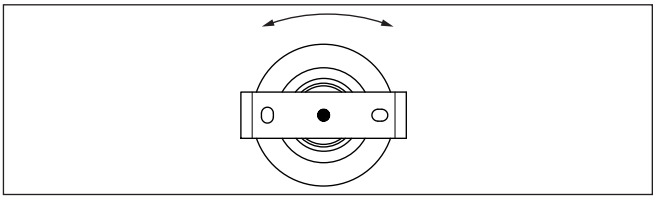

Fig. 7: Rotation in the centre with ceiling mounting

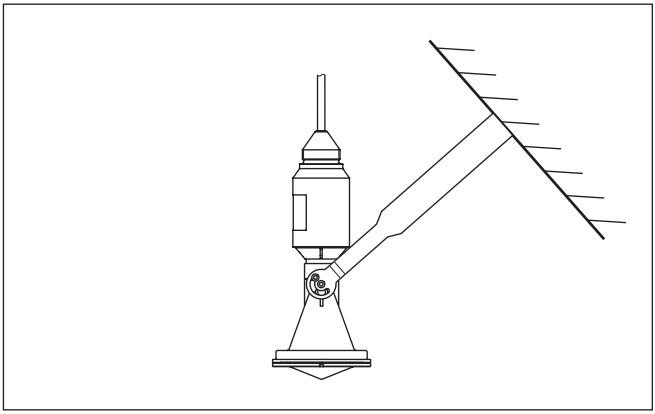

Fig. 8: Adaption to the angle of inclination in case of wall mounting

4.4 Instructions for installation

Tight installation of the plastic horn antenna

For tight installation of the version with plastic horn antenna with compression or adapter flange, the following conditions must be fulfilled:

1. Use suitable flat seal, e.g. of EPDM with Shore hardness 25 or 50
2. Make sure the number of flange screws corresponds to the number of flange holes
3. Tighten all screws with the torque stated in the technical data

Polarisation plane

The emitted radar impulses of the radar sensor are electromagnetic waves. The polarisation plane is the direction of the electrical wave component. By turning the instrument in the connection flange or mounting strap, the polarisation can be used to reduce the effects of false echoes.

The position of the polarisation level is marked by marking bars on the instrument.

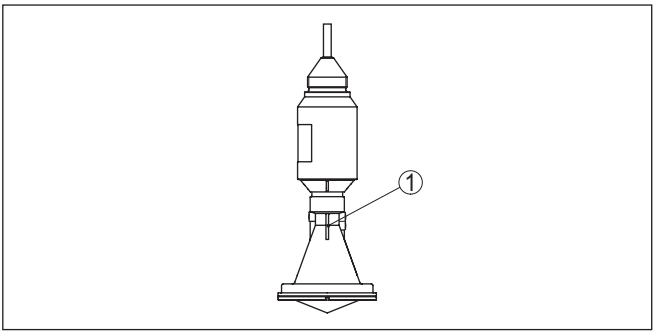

Fig. 9: Position of the polarisation level

1 Marking bar

Installation position

When mounting the sensor, keep a distance of at least 200 mm (7.874 in) to the vessel wall. If the sensor is installed in the center of dished or round vessel tops, multiple echoes can arise. These can, however, be suppressed by an appropriate adjustment (see chapter "*Setup*").

If you cannot keep this distance you should carry out a false echo storage before setup. This applies mainly if buildup on the vessel wall is expected. In this case, we recommend repeating a false echo storage later with existing buildup.

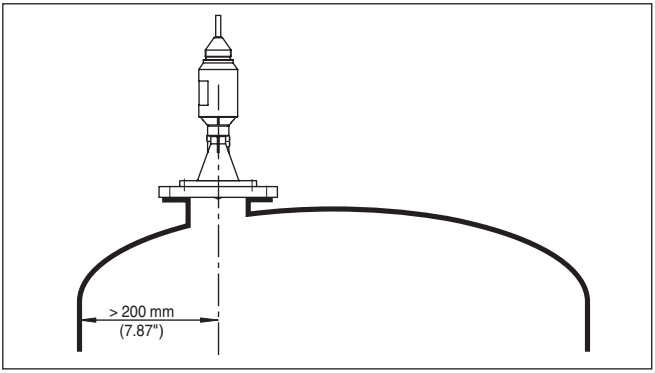

Fig. 10: Mounting of the radar sensor on round vessel tops

In vessels with conical bottom it can be advantageous to mount the sensor in the center of the vessel, as measurement is then possible down to the lowest point of the vessel bottom.

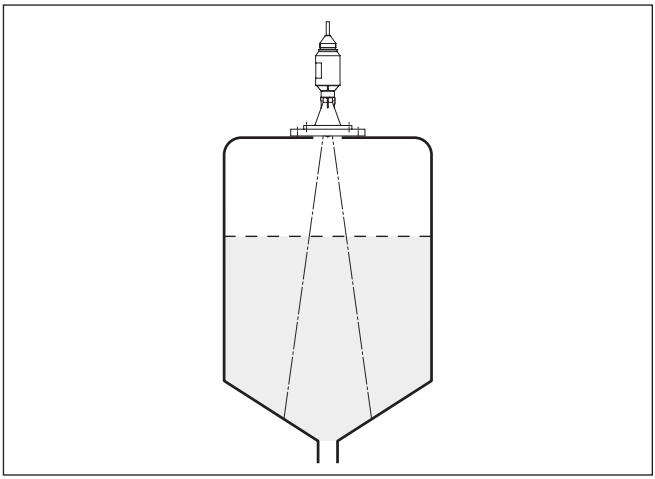

Fig. 11: Mounting of the radar sensor on vessels with conical bottom

Inflowing medium

Do not mount the instrument in or above the filling stream. Make sure that you detect the product surface, not the inflowing product.

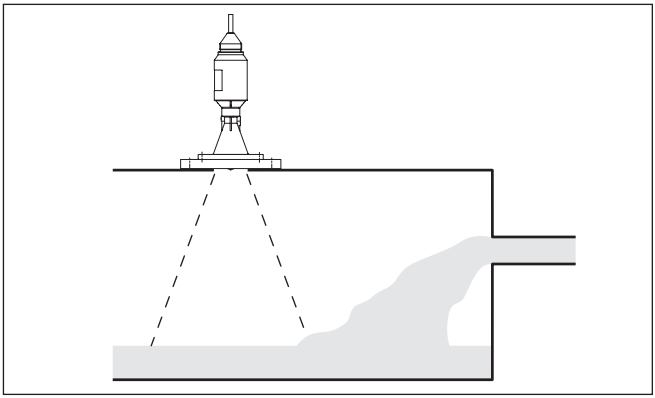

Fig. 12: Mounting of the radar sensor with inflowing medium

Socket

Approximate values of the socket heights are shown in the following illustration. The socket end should be smooth and burr-free, if possible also rounded. After mounting, you have to carry out a false signal memory during the parameter adjustment.

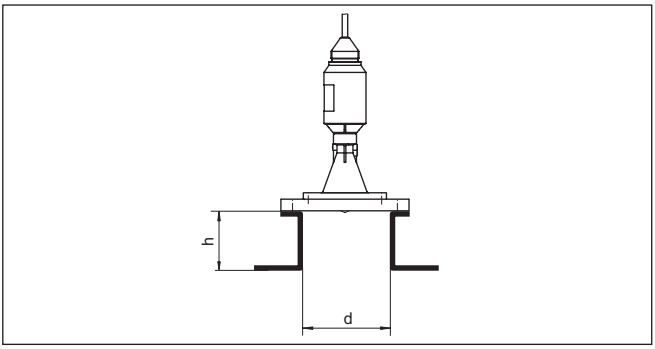

Fig. 13: Deviating socket dimensions

Sensor orientation

Direct the sensor as perpendicular as possible to the product surface to achieve optimum measurement results.

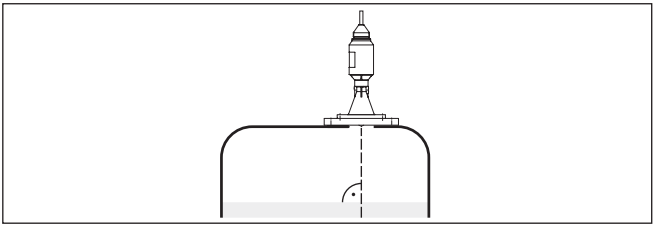

Fig. 14: Orientation of the sensor

Vessel installations

The mounting location of the radar sensor should be a place where no other equipment or fixtures cross the path of the microwave signals.

Vessel installations, such as e.g. ladders, limit switches, heating spirals, struts, etc., can cause false echoes and impair the useful echo. Make sure when planning your measuring site that the radar sensor has a "clear view" to the measured product.

In case of existing vessel installations, a false echo storage should be carried out during setup.

If large vessel installations such as struts or supports cause false echoes, these can be attenuated through supplementary measures. Small, inclined sheet metal baffles above the installations scatter the radar signals and prevent direct interfering reflections.

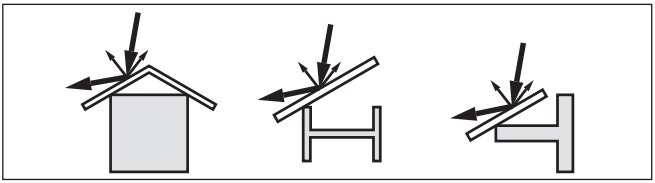

Fig. 15: Cover smooth profiles with deflectors

Foam generation

Through the action of filling, stirring and other processes in the vessel, compact foams that considerably damp the emitted signals may form on the product surface.

If foams are causing measurement errors, the biggest possible radar antennas, the electronics with increased sensitivity or low frequency radar sensors (C band) should be used.

As an alternative, sensors with guided microwave can be used. These are unaffected by foam generation and are best suited for such applications.

Flow measurement with rectangular flume

The short examples give you introductory information on the flow measurement. Detailed planning information is available from flume manufacturers and in special literature.

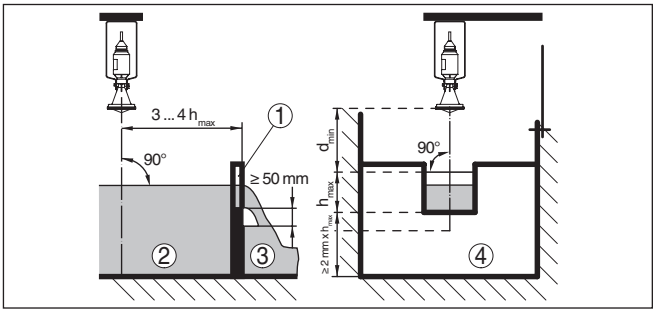

Fig. 16: Flow measurement with rectangular flume: $d_{min.}$ = min. distance of the sensor (see chapter "Technical data"); $h_{max.}$ = max. filling of the rectangular flume

1 Overflow orifice (side view)
2 Headwater
3 Tail water
4 Overfall orifice (view from bottom water)

In general, the following points must be observed:

- Install the sensor on the headwater side
- Installation in the centre of the flume and vertical to the liquid surface
- Distance to the overfall orifice
- Distance of orifice opening above ground
- Min. distance of the orifice opening to bottom water
- Min. distance of the sensor to max. storage level

Flow measurement with Khafagi Venturi flume

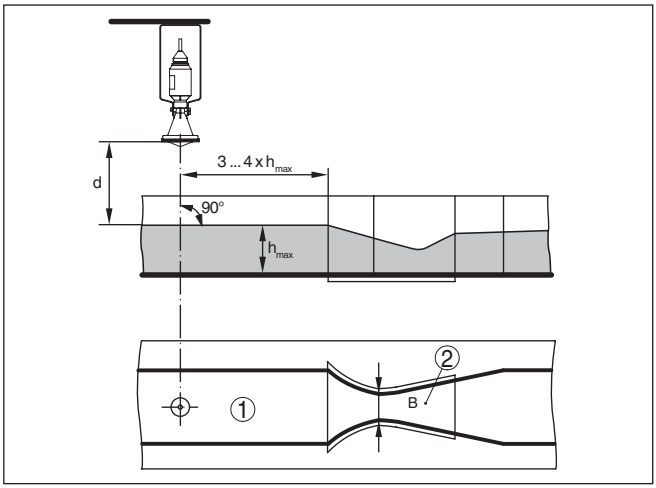

Fig. 17: Flow measurement with Khafagi-Venturi flume: d = Min. distance to sensor; $h_{max.}$ = max. filling of the flume; B = tightest constriction in the flume

1 Position sensor
2 Venturi flume

In general, the following points must be observed:

- Installation of the sensor at the inlet side
- Installation in the centre of the flume and vertical to the liquid surface
- Distance to the Venturi flume
- Min. distance of the sensor to max. storage level

5 Connecting to power supply

5.1 Preparing the connection

Safety instructions

Always keep in mind the following safety instructions:

- Connect only in the complete absence of line voltage
- If overvoltage surges are expected, overvoltage arresters should be installed

Voltage supply

Power supply and current signal are carried on the same two-wire cable. The voltage supply range can differ depending on the instrument version.

The data for power supply are specified in chapter "*Technical data*".

Provide a reliable separation between the supply circuit and the mains circuits according to DIN VDE 0106 part 101.

Keep in mind the following additional factors that influence the operating voltage:

- Output voltage of the power supply unit can be lower under nominal load (with a sensor current of 20.5 mA or 22 mA in case of fault message)
- Influence of additional instruments in the circuit (see load values in chapter "*Technical data*")

Connection cable

The instrument is connected with standard two-wire cable without screen. If electromagnetic interference is expected which is above the test values of EN 61326-1 for industrial areas, screened cable should be used.

For instruments with housing and cable gland, use cable with round cross-section. A cable outer diameter of 5 … 9 mm (0.2 … 0.35 in) ensures the seal effect of the cable gland. If you are using cable with a different diameter, exchange the seal or use a suitable cable gland.

We generally recommend the use of screened cable for HART multidrop mode.

5.2 Wiring plan

Wire assignment, connection cable

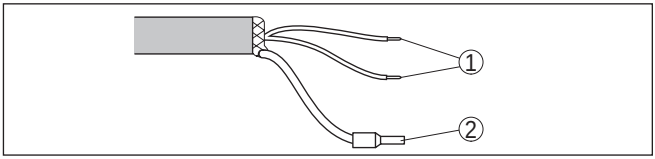

Fig. 18: Wire assignment fix-connected connection cable

1 brown (+) and blue (-) to power supply or to the processing system
2 Shielding

5.3 Switch-on phase

After connecting the instrument to power supply or after a voltage recurrence, the instrument carries out a self-check for approx. 30 s:

38061-EN-140407

- Internal check of the electronics
- Indication of the instrument type, hardware and software version, measurement loop name on the display or PC
- Indication of the status message "*F 105 Determine measured value*" on the display or PC
- The output signal jumps to the set error current

As soon as a plausible measured value is found, the corresponding current is outputted to the signal cable. The value corresponds to the actual level as well as the settings already carried out, e.g. factory setting.

6 Set up with VEGADIS 62

6.1 Connection

The VEGADIS 62 is an indicating and adjustment unit without external energy for looping into 4 … 20 mA/HART circuits.

The parameter adjustment of the sensor is carried out via HART communication. During the parameter adjustment, the VEGADIS 62 acts as a Secondary Master with respect to the sensor.

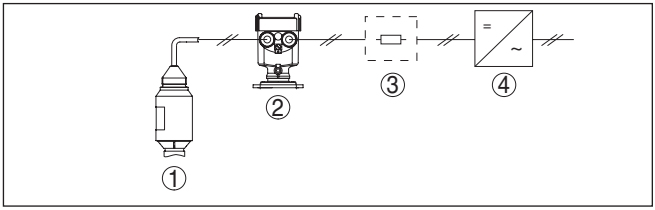

Fig. 19: Connection of VEGADIS 62 to the sensor

1 Sensor
2 VEGADIS 62
3 HART resistance > 150 Ω (necessary with low impedance power supply)
4 Voltage supply/Processing

The following adjustment volume of the connected HART sensor is available:

- Min./Max. adjustment
- zero/span adjustment (live adjustment)
- Damping

6.2 Adjust the sensor

Proceed as follows for the min./max. adjustment of the sensor:

1. Press "***OK***" to reach the adjustment menu.
2. Select the submenu "*Measurement*" and confirm with "***OK***".

3. Move to the menu item "*Unit*". There the instrument unit of the sensor is displayed, for example "*m*".

4. Move to the menu item "*MB begin*", there the max. measuring distance is displayed, for example the default setting 15 m.

38061-EN-140407

5. Edit value via "***OK***" and adjust the requested value, for example, 5 m.
6. Save value with "***OK***", VEGAPULS WL 61 displays briefly "*Wait*", then the value is taken over into the sensor.
7. Move to the menu item "*MB end*", there the min. measuring distance is displayed, for example the default setting 0 m.

8. Proceed accordingly for "*MB end*", enter for example the value 1 m and store.

The min./max. adjustment is finished.

After "***[ESC]***", the display shows the actually measured distance as digital value in m and the level on the bargraph.

Keep in mind that the displayed values are anticyclical. With increasing distance, the 4 … 20 mA value gets smaller and vice versa.

6.3 Scale the indication

Proceed as follows for indication of the level as digital value in %:

1. Press "***OK***" to reach the adjustment menu.
2. Select the submenu "*Measurement*" and confirm with "***OK***".

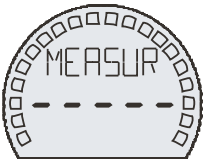

3. Select the menu item "*Unit*"

4. Select the unit "***USER***" and confirm with "***OK***".

Information:
The symbol for HART extinguishes, the HART communication is switched off.

5. Select the submenu "*Indication*" and confirm with "***OK***".

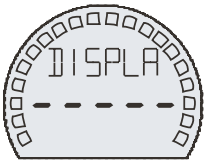

6. Select the menu item "*Unit*" and confirm with "***OK***".

7. Select the unit "***%***" and confirm with "***OK***".

The conversion to level indication in % is finished. The unit in the menu "*Measurement*" must remain at "*USER*".

After "***[ESC]***", the display shows the level as digital value in % and on the bargraph. The indication values are now synchronous.

7 Setup with PACTware

7.1 Connect the PC

Via interface adapter to the signal cable

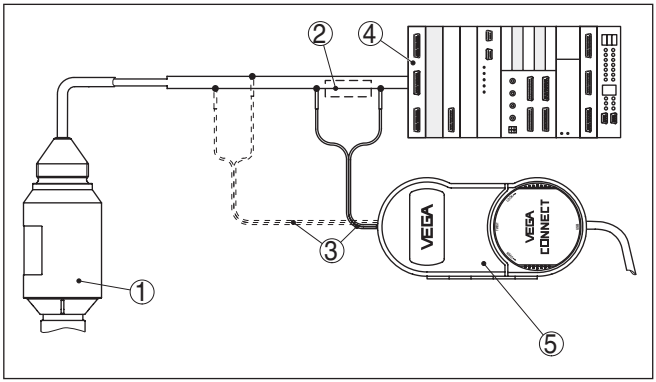

Fig. 20: Connecting the PC to the signal cable

1 *Sensor*
2 *HART resistance 250 Ω (optional depending on processing)*
3 *Connection cable with 2 mm pins and terminals*
4 *Processing system/PLC/Voltage supply*
5 *Interface adapter, for example VEGACONNECT 4*

Note:
With power supply units with integrated HART resistance (internal resistance approx. 250 Ω), an additional external resistance is not necessary. This applies, e.g. to the VEGA instruments VEGATRENN 149A, VEGAMET 381, VEGAMET 391. Common Ex separators are also usually equipped with a sufficient current limitation resistance. In such cases, the interface converter can be connected parallel to the 4 … 20 mA cable (dashed line in the previous illustration).

Via interface adapter to the VEGAMET signal conditioning instrument

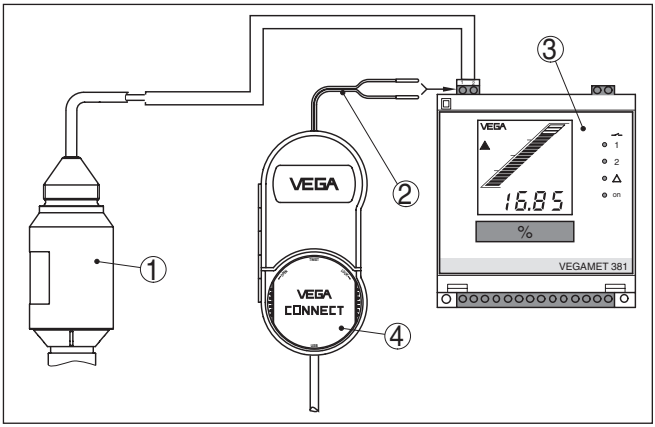

Fig. 21: Connection of the PC to the VEGAMET signal conditioning instrument

1 *Sensor*
2 *Connection cable with 2 mm pins*
3 *Signal conditioning instrument, e.g. VEGAMET 381*
4 *Interface adapter, for example VEGACONNECT 4*

7.2 Parameter adjustment with PACTware

Prerequisites

For parameter adjustment of the sensor via a Windows PC, the configuration software PACTware and a suitable instrument driver (DTM) according to FDT standard are required. The up-to-date PACTware version as well as all available DTMs are compiled in a DTM Collection. The DTMs can also be integrated into other frame applications according to FDT standard.

Note:
To ensure that all instrument functions are supported, you should always use the latest DTM Collection. Furthermore, not all described functions are included in older firmware versions. You can download the latest instrument software from our homepage. A description of the update procedure is also available in the Internet.

Further setup steps are described in the operating instructions manual "*DTM Collection/PACTware*" attached to each DTM Collection and which can also be downloaded from the Internet. Detailed descriptions are available in the online help of PACTware and the DTMs.

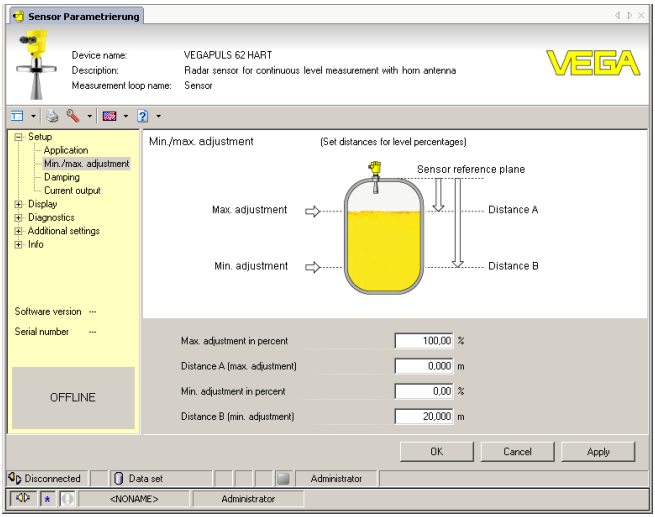

Fig. 22: Example of a DTM view

Adjustment

Since a radar sensor is a distance measuring instrument, the distance from the sensor to the product surface is measured. For indication of the real level, an allocation of the measured distance to the percentage height must be carried out. To perform the adjustment, enter the distance with full and empty vessel, see the following example:

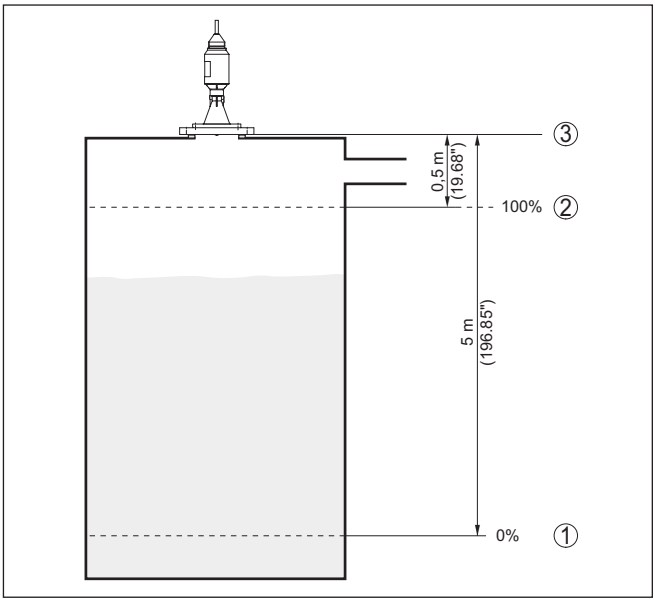

Fig. 23: Parameterization example

1 Min. level = max. meas. distance
2 Max. level = min. meas. distance

If these values are not known, an adjustment with the distances of for example 10 % and 90 % is possible. Starting point for these distance specifications is always the seal surface of the thread or flange. By means of these settings, the real level will be calculated.

The real product level during this adjustment is not important, because the min./max. adjustment is always carried out without changing the product level. These settings can be made ahead of time without the instrument having to be installed.

Standard/Full version

All device DTMs are available as a free-of-charge standard version and as a full version that must be purchased. In the standard version, all functions for complete setup are already included. An assistant for simple project configuration simplifies the adjustment considerably. Saving/printing the project as well as import/export functions are also part of the standard version.

In the full version there is also an extended print function for complete project documentation as well as a save function for measured value and echo curves. In addition, there is a tank calculation program as well as a multiviewer for display and analysis of the saved measured value and echo curves.

The standard version is available as a download under www.vega.com/downloads and "*Software*". The full version is available on CD from the agency serving you.

7.3 Saving the parameter adjustment data

We recommend documenting or saving the parameter adjustment data via PACTware. That way the data are available for multiple use or service purposes.

8 Set up with other systems

8.1 DD adjustment programs

Device descriptions as Enhanced Device Description (EDD) are available for DD adjustment programs such as, for example, AMS™ and PDM.

The files can be downloaded at www.vega.com/downloads under "*Software*".

8.2 Communicator 375, 475

Device descriptions for the instrument are available as DD or EDD for parameter adjustment with the Field Communicator 375 or 475.

The files can be downloaded at www.vega.com/downloads under "*Software*".

9 Diagnosis, Asset Management and service

9.1 Maintenance

If the device is used correctly, no maintenance is required in normal operation.

9.2 Measured value and event memory

The instrument has several memories which are available for diagnosis purposes. The data remain even with voltage interruption.

Measured value memory

Up to 60,000 measured values can be stored in the sensor in a ring memory. Each entry contains date/time as well as the respective measured value. Storable values are for example:

- Distance
- Filling height
- Percentage value
- Lin. percent
- Scaled
- Current value
- Meas. reliability
- Electronics temperature

When the instrument is shipped, the measured value memory is active and stores distance, measurement certainty and electronics temperature every 3 minutes.

The requested values and recording conditions are set via a PC with PACTware/DTM or the control system with EDD. Data are thus read out and also reset.

Event memory

Up to 500 events are automatically stored with a time stamp in the sensor (non-deletable). Each entry contains date/time, event type, event description and value. Event types are for example:

- Modification of a parameter
- Switching on and off times
- Status messages (according to NE 107)
- Error messages (according to NE 107)

The data are read out via a PC with PACTware/DTM or the control system with EDD.

Echo curve memory

The echo curves are stored with date and time and the corresponding echo data. The memory is divided into two sections:

Echo curve of the setup: This is used as reference echo curve for the measurement conditions during setup. Changes in the measurement conditions during operation or buildup on the sensor can thus be recognized. The echo curve of the setup is stored via:

- PC with PACTware/DTM
- Control system with EDD
- Indicating and adjustment module

Further echo curves: Up to 10 echo curves can be stored in a ring buffer in this memory section. Further echo curves are stored via:

- PC with PACTware/DTM
- Control system with EDD

9.3 Asset Management function

The instrument features self-monitoring and diagnostics according to NE 107 and VDI/VDE 2650. In addition to the status messages in the following tables there are more detailed error messages available under the menu item "*Diagnostics*" via the indicating and adjustment module, PACTware/DTM and EDD.

Status messages

The status messages are classified in the following categories:

- Failure
- Function check
- Out of specification
- Maintenance requirement

and explained by pictographs:

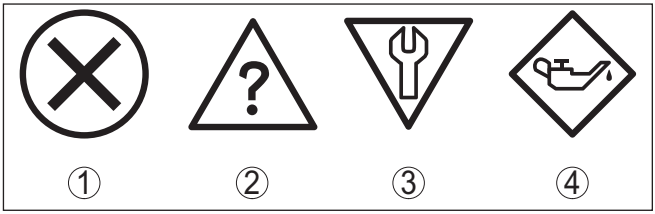

Fig. 24: Pictograms of the status messages

1 Failure - red
2 Function check - orange
3 Out of specification - yellow
4 Maintenance - blue

Failure: Due to a malfunction in the instrument, a failure message is outputted.

This status message is always active. It cannot be deactivated by the user.

Function check: The instrument is in operation, the measured value is temporarily invalid (for example during simulation).

This status message is inactive by default. It can be activated by the user via PACTware/DTM or EDD.

Out of specification: The measured value is unstable because the instrument specification is exceeded (e.g. electronics temperature).

This status message is inactive by default. It can be activated by the user via PACTware/DTM or EDD.

Maintenance: Due to external influences, the instrument function is limited. The measurement is affected, but the measured value is still valid. Plan in maintenance for the instrument because a failure is expected in the near future (e.g. due to buildup).

This status message is inactive by default. It can be activated by the user via PACTware/DTM or EDD.

Failure

The following table shows the error codes and text messages in the status message "*Failure*" and gives information on the cause and how to eliminate it. Keep in mind that some specifications are only valid for four-wire instruments and the electronics of VEGAPULS WL 61 cannot be exchanged by the user.

Code **Text message**	**Cause**	**Rectification**
F013 no measured value available	– Sensor does not detect an echo during operation – Antenna system contaminated or defective	– Check or correct installation and/or parameter adjustment – Clean or exchange process component or antenna
F017 Adjustment span too small	– Adjustment not within specification	– Change adjustment according to the limit values (difference between min. and max. ≥ 10 mm)
F025 Error in the linearization table	– Index markers are not continuously rising, for examle unlogical value pairs	– Check linearization table – Delete table/Create new
F036 No operable software	– Failed or interrupted software update	– Repeat software update – Check electronics version – Exchanging the electronics – Send instrument for repair
F040 Error in the electronics	– Hardware defect	– Exchanging the electronics – Send instrument for repair
F080	– General software error	– Separate operating voltage briefly
F105 Determine measured value	– The instrument is still in the start phase, the measured value could not yet be determined	– Wait for the warm-up phase – Duration depending on the version and parameter adjustment up to approximately 3 min.
F113 Communication error	– EMC interferences – Transmission error with the external communication with 4-wire power supply unit	– Remove EMC influences – Exchange 4-wire power supply unit or electronics
F125 Unpermissible electronics temperature	– Temperature of the electronics in the non-specified section	– Check ambient temperature – Isolate electronics – Use instrument with higher temperature range
F260 Error in the calibration	– Error in the calibration carried out in the factory – Error in the EEPROM	– Exchanging the electronics – Send instrument for repair

Code Text message	Cause	Rectification
F261 Error in the configuration	– Error during setup – False signal suppression faulty – Error when carrying out a reset	– Repeat setup – Repeat reset
F264 Installation/ Setup error	– Adjustment not within the vessel height/measuring range – Max. measuring range of the instrument not sufficient	– Check or correct installation and/or parameter adjustment – Use an instrument with bigger measuring range
F265 Measurement function disturbed	– Sensor no longer carries out a measurement – Operating voltage too low	– Check operating voltage – Carry out a reset – Separate operating voltage briefly

Function check

The following table shows the error codes and text messages in the status message "*Function check*" and provides information on causes as well as corrective measures.

Code Text message	Cause	Rectification
C700 Simulation active	– A simulation is active	– Finish simulation – Wait for the automatic end after 60 mins.

Out of specification

The following table shows the error codes and text messages in the status message "*Out of specification*" and provides information on causes as well as corrective measures.

Code Text message	Cause	Rectification
S600 Unpermissible electronics temperature	– Temperature of the electronics in the non-specified section	– Check ambient temperature – Isolate electronics – Use instrument with higher temperature range
S601 Overfilling	– Danger of vessel overfilling	– Make sure that there is no further filling – Check level in the vessel

Maintenance

The following table shows the error codes and text messages in the status message "*Maintenance*" and provides information on causes as well as corrective measures.

Code Text message	Cause	Rectification
M500 Error with the reset delivery status	– With the reset to delivery status, the data could not be restored	– Repeat reset – Load XML file with sensor data into the sensor
M501 Error in the non-active linearization table	– Hardware error EEPROM	– Exchanging the electronics – Send instrument for repair
M502 Error in the diagnosis memory	– Hardware error EEPROM	– Exchanging the electronics – Send instrument for repair
M503 Reliability too low	– The echot/noise ratio is the small for a reliable measurement	– Check installation and process conditions – Clean the antenna – Change polarisation direction – Use instrument with higher sensitivity
M504 Error on an device interface	– Hardware defect	– Check connections – Exchanging the electronics – Send instrument for repair
M505 No echo available	– Level echo can no longer be detected	– Clean the antenna – Use a more suitable antenna/sensor – Remove possible false echoes – Optimize sensor position and orientation

9.4 Rectify faults

Reaction when malfunctions occur

The operator of the system is responsible for taking suitable measures to rectify faults.

Procedure for fault rectification

The first measures are:

- Evaluation of fault messages, for example via the indicating and adjustment module
- Checking the output signal with 4 … 20 mA instruments
- Treatment of measurement errors

Further comprehensive diagnostics options offer a PC with the software PACTware and the suitable DTM. In many cases, the reasons can be determined in this way and faults can be rectified.

Check the 4 … 20 mA signal

Connect a handmultimeter in the suitable measuring range according to the wiring plan. The following table describes possible errors in the current signal and helps to remove them:

Error	Cause	Rectification
4 … 20 mA signal not stable	– Level fluctuations	– Set damping according to the instrument via the indicating and adjustment module or PACTware/DTM
4 … 20 mA signal missing	– Electrical connection faulty	– Check connection according to chapter "Connection steps" and if necessary, correct according to chapter "Wiring plan".
	– Voltage supply missing	– Check cables for breaks; repair if necessary
	– Operating voltage too low or load resistance too high	– Check, adapt if necessary
Current signal greater than 22 mA or less than 3.6 mA	– Electronics module in the sensor defective	– Exchange the instrument or send it in for repair

Treatment of measurement errors with liquids

The below tables show typical examples of application-related measurement errors with liquids. The measurement errors are differentiated according to the following:

- Constant level
- Filling
- Emptying

The images in column "*Error pattern*" show the real level with a broken line and the level displayed by the sensor as a continuous line.

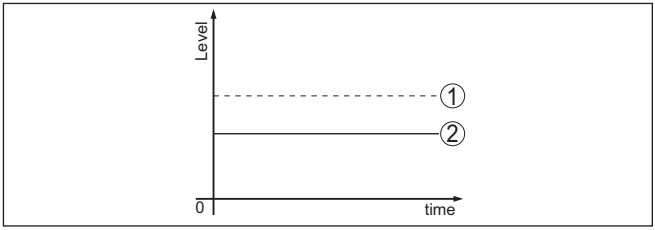

1 Real level
2 Level displayed by the sensor

Instructions:

- Wherever the sensor displays a constant value, the reason could also be the fault setting of the current output to "*Hold value*"
- In case of a too low level indication, the reason could be a line resistance that is too high

38061-EN-140407

Measurement error with constant level

Fault description	Error pattern	Cause	Rectification
1. Measured value shows a too low or too high level	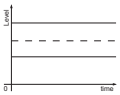	– Min./max. adjustment not correct	– Adapt min./max. adjustment
		– Wrong linearization curve	– Adapt linearization curve
		– Installation in a bypass tube or standpipe, hence running time error (small measurement error close to 100 %/large error close to 0 %)	– Check parameter "Application" with respect to vessel form, adapt if necessary (bypass, standpipe, diameter)
2. Measured value jumps towards 0 %	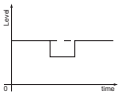	– Multiple echo (vessel top, product surface) with amplitude higher than the level echo	– Check parameter "Application", especially vessel top, product type, dished end, high dielectric figure, adapt if necessary
3. Measured value jumps towards 100 %	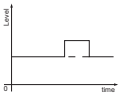	– Due to the process, the amplitude of the product echo sinks – A false signal suppression was not carried out	– Carry out false signal suppression
		– Amplitude or position of a false echo has changed (e.g. condensation, buildup); false signal suppression no longer matches	– Determine the reason for the changed false echoes, carry out false signal suppression, e.g. with condensation

Measurement error during filling

Fault description	Error pattern	Cause	Rectification
4. Measured value remains unchanged during filling	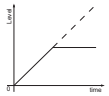	– False echoes in the close range too big or product echo too small – Strong foam or spout generation – Max. adjustment not correct	– Eliminate false echoes in the close range – Check measurement situation: Antenna must protrude out of the socket, installations – Remove contamination on the antenna – Minimize interfering installations in the close range by changing the polarization direction – Create a new false signal suppression – Adapt max. adjustment
5. Measured value remains in the bottom section during filling		– Echo from the tank bottom larger than the product echo, for example, with products with $\varepsilon_r < 2.5$ oil-based, solvents	– Check application parameters Medium, Vessel height and Floor form, adapt if necessary
6. Measured value remains momentarily unchanged during filling and then jumps to the correct level	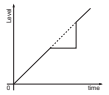	– Turbulence on the product surface, quick filling	– Check application parameters, change if necessary, e.g. in dosing vessel, reactor

38061-EN-140407

Fault description	Error pattern	Cause	Rectification
7. Measured value jumps towards 0 % during filling	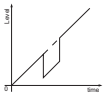	– Amplitude of a multiple echo (vessel top - product surface) is larger than the level echo	– Check parameter "Application", especially vessel top, product type, dished end, high dielectric figure, adapt if necessary
		– The level echo cannot be distinguished from the false echo at a false echo position (jumps to multiple echo)	– Remove/reduce false echo: minimize interfering installations by changing the polarization direction – Chose a more suitable installation position
8. Measured value jumps towards 100 % during filling	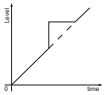	– Due to strong turbulence and foam generation during filling, the amplitude of the product echo sinks. Measured value jumps to the false echo	– Carry out false signal suppression
9. Measured value jumps sporadically to 100 % during filling	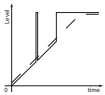	– Varying condensation or contamination on the antenna	– Carry out a false signal suppression or increase false signal suppression with condensation/contamination in the close range by editing
10. Measured value jumps to ≥ 100 % or 0 m distance	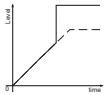	– Level echo is no longer detected in the close range due to foam generation or false echoes in the close range. The sensor goes into overfill protection mode. The max. level (0 m distance) as well as the status message "Overfill protection" are outputted.	– Check measuring site: Antenna must protrude out of the socket – Remove contamination on the antenna – Use a sensor with a more suitable antenna

Measurement error during emptying

Fault description	Error pattern	Cause	Rectification
11. Measured value remains unchanged in the close range during emptying		– False signal larger than the level echo – Level echo too small	– Remove false echoes in the close range. Check: Antenna must protrude out of the socket – Remove contamination on the antenna – Minimize interfering installations in the close range by changing the polarization direction – After removing the false echoes, the false signal suppression must be deleted. Carry out a new false signal suppression
12. Measured value jumps towards 0 % during emptying		– Echo from the tank bottom larger than the product echo, for example, with products with ε_r < 2.5 oil-based, solvents	– Check application parameters Medium type, Vessel height and Floor form, adapt if necessary

38061-EN-140407

Fault description	Error pattern	Cause	Rectification
13. Measured value jumps sporadically towards 100 % during emptying	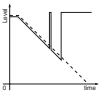	– Varying condensation or contamination on the antenna	– Carry out false signal suppression or increase false signal suppression in the close range by editing – With bulk solids, use radar sensor with purging air connection

Reaction after fault rectification

Depending on the reason for the fault and the measures taken, the steps described in chapter "*Setup*" must be carried out again or must be checked for plausibility and completeness.

24 hour service hotline

Should these measures not be successful, please call in urgent cases the VEGA service hotline under the phone no. **+49 1805 858550**.

The hotline is also available outside the normal working hours on seven days a week around the clock.

Since we offer this service worldwide, the support is in the English language. The service itself is free of charge, the only costs involved are the normal call charges.

9.5 Software update

The following components are required to update the sensor software:

- Sensor
- Voltage supply
- Interface adapter VEGACONNECT 4
- PC with PACTware
- Current sensor software as file

You can find the actual sensor software as well as detailed information of the procedure under "www.vega.com/downloads" and "*Software*".

Caution:
Instruments with approvals can be bound to certain software versions. Therefore make sure that the approval remains effective with a software update.

You can find detailed information on www.vega.com/downloads and "*Approvals*".

9.6 How to proceed in case of repair

You can find a repair form as well as detailed information on how to proceed under www.vega.com/downloads and "*Forms and certificates*".

By doing this you help us carry out the repair quickly and without having to call back for needed information.

If a repair is necessary, please proceed as follows:

- Print and fill out one form per instrument
- Clean the instrument and pack it damage-proof

- Attach the completed form and, if need be, also a safety data sheet outside on the packaging
- Please contact for the return shipment the agency serving you. You can find the agency on our home page www.vega.com.

10 Dismounting

10.1 Dismounting steps

Warning:
Before dismounting, be aware of dangerous process conditions such as e.g. pressure in the vessel, high temperatures, corrosive or toxic products etc.

Take note of chapters "*Mounting*" and "*Connecting to power supply*" and carry out the listed steps in reverse order.

10.2 Disposal

The instrument consists of materials which can be recycled by specialised recycling companies. We use recyclable materials and have designed the electronics to be easily separable.

Correct disposal avoids negative effects on humans and the environment and ensures recycling of useful raw materials.

Materials: see chapter "*Technical data*"

If you have no way to dispose of the old instrument properly, please contact us concerning return and disposal.

WEEE directive 2002/96/EG
This instrument is not subject to the WEEE directive 2002/96/EG and the respective national laws. Pass the instrument directly on to a specialised recycling company and do not use the municipal collecting points. These may be used only for privately used products according to the WEEE directive.

11 Supplement

11.1 Technical data

General data	
Materials, wetted parts	
– Adapter flange	PP
– Seal, adapter flange	FKM (COG VI500), EPDM (COG AP310)
– Antenna	PBT-GF 30
– Focussing lense	PP
Materials, non-wetted parts	
– Compression flange	PP
– Mounting bracket	316L
– Fixing screws, mounting strap	316L
– Fixing screws, adapter flange	304
– Housing	plastic PBT (Polyester)
– type label support on cable	PE hard
Process fitting, mounting thread on the housing	
– Flange	DIN from DN 80, ANSI from 3", JIS from DN 100 10K
– Pipe thread, cylindrical (ISO 228 T1)	G1½
Instrument weight, depending on process fitting	0.7 … 3.4 kg (1.543 … 7.496 lbs)
Weight suspension cable	0.1 kg/m (0.07 lbs/ft)
Max. torque for mounting strap on sensor housing	4 Nm
Max. torque flange screws	
– Compression flange DN 80	5 Nm (3.689 lbf ft)
– Adapter flange DN 100	7 Nm (5.163 lbf ft)

Input variable	
Measured variable	The measured variable is the distance between the process fitting of the sensor and the product surface. The reference plane is the lower side of the flange.

38061-EN-140407

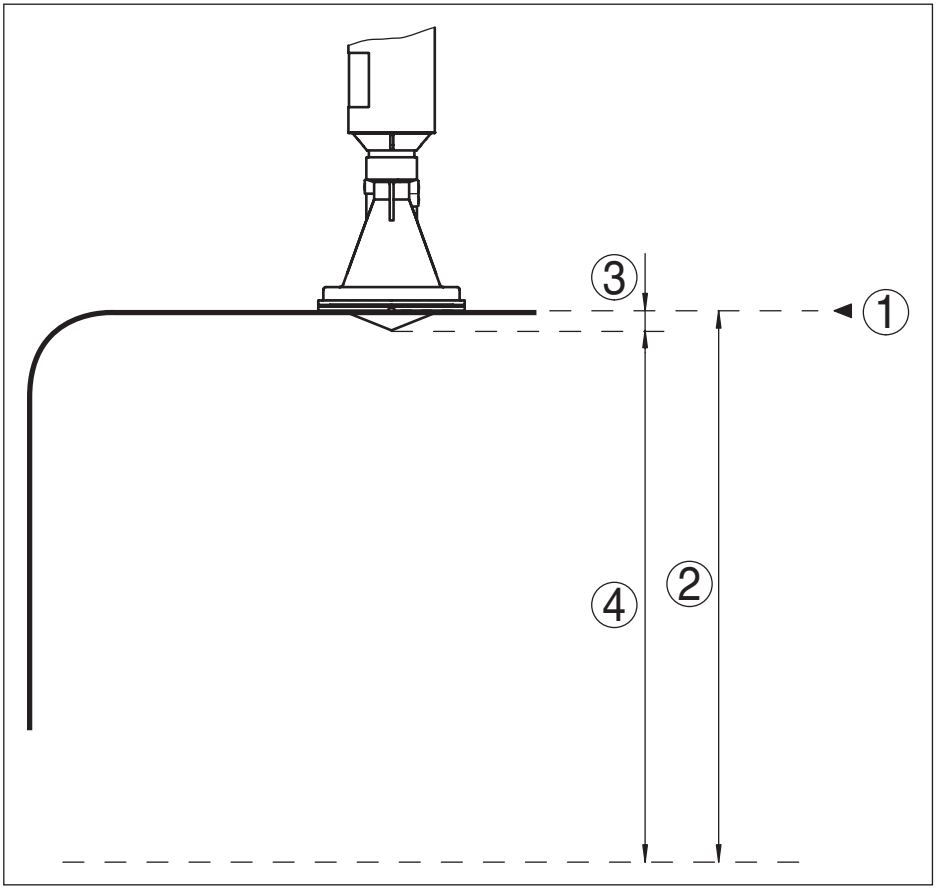

Fig. 39: Data of the input variable

1 *Reference plane*
2 *Measured variable, max. measuring range*
3 *Antenna length*
4 *Useful measuring range*

Max. measuring range	15 m (49.21 ft)

Output variable	
Output signal	4 … 20 mA/HART
Fulfilled HART specification	7.0
Signal resolution	0.3 µA
Failure signal current output (adjustable)	mA-value unchanged 20.5 mA, 22 mA, < 3.6 mA
Max. output current	22 mA
Starting current	≤ 3.6 mA; ≤ 10 mA for 5 ms after switching on
Load	see load diagram under Power supply

38061-EN-140407

Damping (63 % of the input variable), adjustable	0 … 999 s
HART output values according to HART 7.0[1]	
– PV (Primary Value)	Distance to the level
– SV (Secondary Value)	Level as percentage value
– TV (Third Value)	Linearised percentage value
– QV (Fourth Value)	Scaled measured value
Resolution, digital	< 1 mm (0.039 in)

Accuracy (according to DIN EN 60770-1)

Process reference conditions according to DIN EN 61298-1	
– Temperature	+18 … +30 °C (+64 … +86 °F)
– Relative humidity	45 … 75 %
– Air pressure	860 … 1060 mbar/86 … 106 kPa (12.5 … 15.4 psig)
Installation reference conditions	
– Min. distance to installations	> 200 mm (7.874 in)
– Reflector	Plane plate reflector
– False reflections	Largest false echo 20 dB smaller than the useful echo
Deviation with liquids	See following diagrams

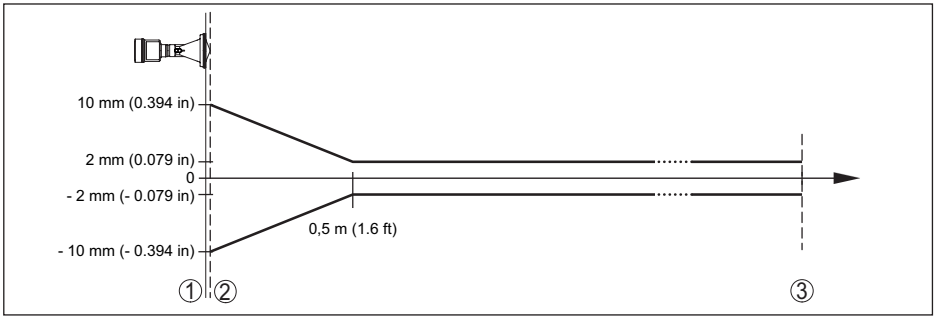

Fig. 40: Deviation under reference conditions

1 Reference plane
2 Antenna edge
3 Recommended measuring range

Reproducibility	≤ ±1 mm

Variables influencing measurement accuracy

Specifications apply to the HART signal and the current output

Temperature drift - Digital output	±3 mm/10 K relating to the max. measuring range or max. 10 mm
Additional deviation through strong, high frequency electromagnetic fields acc. to EN 61326	< ±50 mm

[1] Default values, can be assigned individually

38061-EN-140407

Specifications apply also to the current output

Temperature drift - Current output	±0.03 %/10 K relating to the 16 mA span max. ±0.3 %
Deviation on the current output by analogue/digital conversion	< ±15 µA
Deviation on the current output due to strong, high frequency electromagnetic fields acc. to EN 61326	< ±150 µA

Characteristics and performance data

Measuring frequency	K-band (26 GHz technology)
Measuring cycle time approx.	450 ms
Step response time[2]	≤ 3 s
Tracking speed of the measuring window max.	1 m/min
Beam angle[3]	10°
Emitted HF power[4]	
– Average spectral transmission power density	-34 dBm/MHz EIRP
– Max. spectral transmission power density	+6 dBm/50 MHz EIRP
– Max. power density in a distance of 1 m	< 1 µW/cm^2

Ambient conditions

Ambient, storage and transport temperature	-40 … +80 °C (-40 … +176 °F)

Process conditions

For the process conditions, please also note the specifications on the type label. The lower value always applies.

Vessel pressure	-1 … 2 bar (-100 … 200 kPa/-14.5 … 29.0 psig)
Process temperature (measured on the process fitting)	-40 … +80 °C (-40 … +176 °F)
Vibration resistance	
– With adapter flange	2 g at 5 … 200 Hz according to EN 60068-2-6 (vibration with resonance)
– with mounting strap	1 g at 5 … 200 Hz according to EN 60068-2-6 (vibration with resonance)
Shock resistance	100 g, 6 ms according to EN 60068-2-27 (mechanical shock)

[2] Time span after a sudden distance change of max. 0.5 m until the output signal reaches for the first time 90% of the final value (IEC 61298-2).
[3] Outside the specified beam angle, the energy of the radar signal has a level which is reduced by 50 % (-3 dB)
[4] EIRP: Equivalent Isotropic Radiated Power

Electromechanical data - version IP 66/IP 68 (2 bar)	
Cable entry	IP 68 cable gland
Connection cable	
– Configuration	two wires, one Kevlar cable, braiding, cover
– Wire cross-section	0.5 mm^2 (AWG 20)
– Standard length	6 m (19.69 ft)
– Max. length	550 m (1804 ft)
– Min. bending radius	25 mm (0.984 in) with 25 °C (77 °F)
– Diameter approx.	8 mm (0.315 in)
– Wire isolating and cable cover	PUR
– Colour - standard	Black
– Colour - Ex-version	Blue
– Fire protection classification	UL94-V0

Integrated clock	
Date format	Day.Month.Year
Time format	12 h/24 h
Time zone Ex factory	CET

Measurement electronics temerature	
Resolution	1 °C (1.8 °F)
Accuracy	±1 °C (1.8 °F)

Voltage supply	
Operating voltage	
– Non-Ex instrument	9.6 … 36 V DC
– Ex-ia instrument	9.6 … 30 V DC
Interpolation protection	Integrated
Permissible residual ripple - Non-Ex, Ex-ia instrument	
– for 9.6 V< U_N < 14 V	≤ 0.7 V_{eff} (16 … 400 Hz)
– for 18 V< U_N < 36 V	≤ 1.0 V_{eff} (16 … 400 Hz)
Load	see diagram

38061-EN-140407

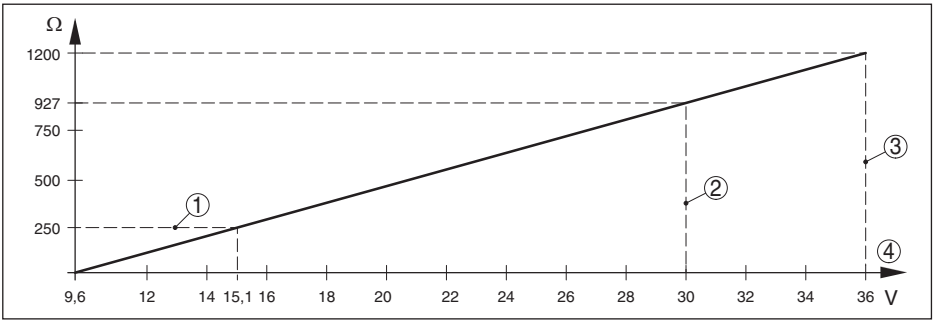

Fig. 41: Voltage diagram

1 *HART load*
2 *Voltage limit Ex-ia instrument*
3 *Voltage limit non-Ex/Ex-d instrument*
4 *Operating voltage*

Electrical protective measures	
Protection rating	IP 66/IP 68 (2 bar)
Overvoltage category	III
Protection class	III

Approvals

Instruments with approvals can have different technical data depending on the version.

For that reason the associated approval documents of these instruments must be carefully noted. They are part of the delivery or can be downloaded under www.vega.com and "*VEGA Tools*" as well as under "Downloads" and "*Approvals*".

11.2 Radio astronomy stations

The following table shows the geographic position of the radio astronomy stations in Europe:

Country	Name of the Station	Geographic Latitude	Geographic Longitude
Finland	Metsähovi	60°13'04" N	24°23'37" E
	Tuorla	60°24'56" N	24°26'31" E
France	Plateau de Bure	44°38'01" N	05°54'26" E
	Floirac	44°50'10" N	00°31'37" W
Germany	Effelsberg	50°31'32" N	06°53'00" E
Hungary	Penc	47°47'22" N	19°16'53" E
Italy	Medicina	44°31'14" N	11°38'49" E
	Noto	36°52'34" N	14°59'21" E
	Sardinia	39°29'50" N	09°14'40" E
Poland	Krakow- Fort Skala	50°03'18" N	19°49'36" E

Country	Name of the Station	Geographic Latitude	Geographic Longitude
Russia	Dmitrov	56°26'00" N	37°27'00" E
	Kalyazin	57°13'22" N	37°54'01" E
	Pushchino	54°49'00" N	37°40'00" E
	Zelenchukskaya	43°49'53" N	41°35'32" E
Spain	Yebes	40°31'27" N	03°05'22" W
	Robledo	40°25'38" N	04°14'57" W
Switzerland	Bleien	47°20'26" N	08°06'44" E
Sweden	Onsala	57°23'45" N	11°55'35" E
UK	Cambridge	52°09'59" N	00°02'20" E
	Darnhall	53°09'22" N	02°32'03" W
	Jodrell Bank	53°14'10" N	02°18'26" W
	Knockin	52°47'24" N	02°59'45" W
	Pickmere	53°17'18" N	02°26'38" W

11.3 Dimensions

The following dimensional drawings represent only an extract of all possible versions. Detailed dimensional drawings can be downloaded at www.vega.com/downloads under "*Drawings*".

VEGAPULS WL 61, basic version

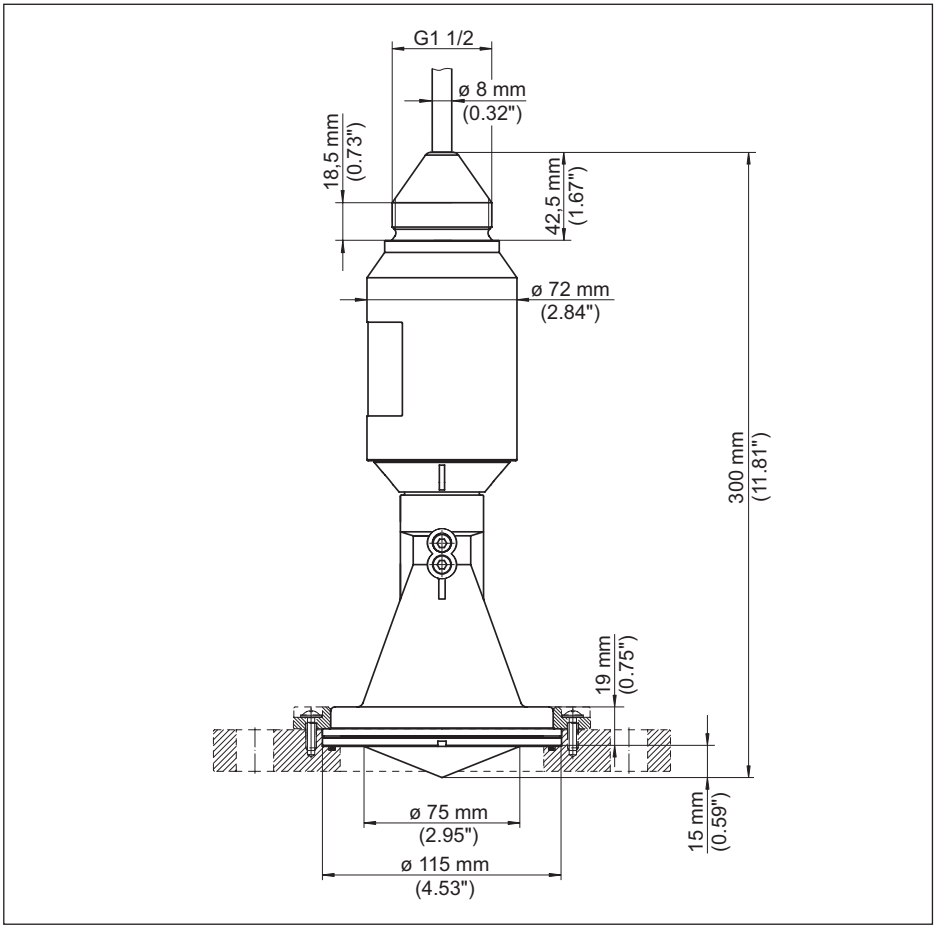

Fig. 42: VEGAPULS WL 61, basic version

38061-EN-140407

VEGAPULS WL 61, version with mounting strap

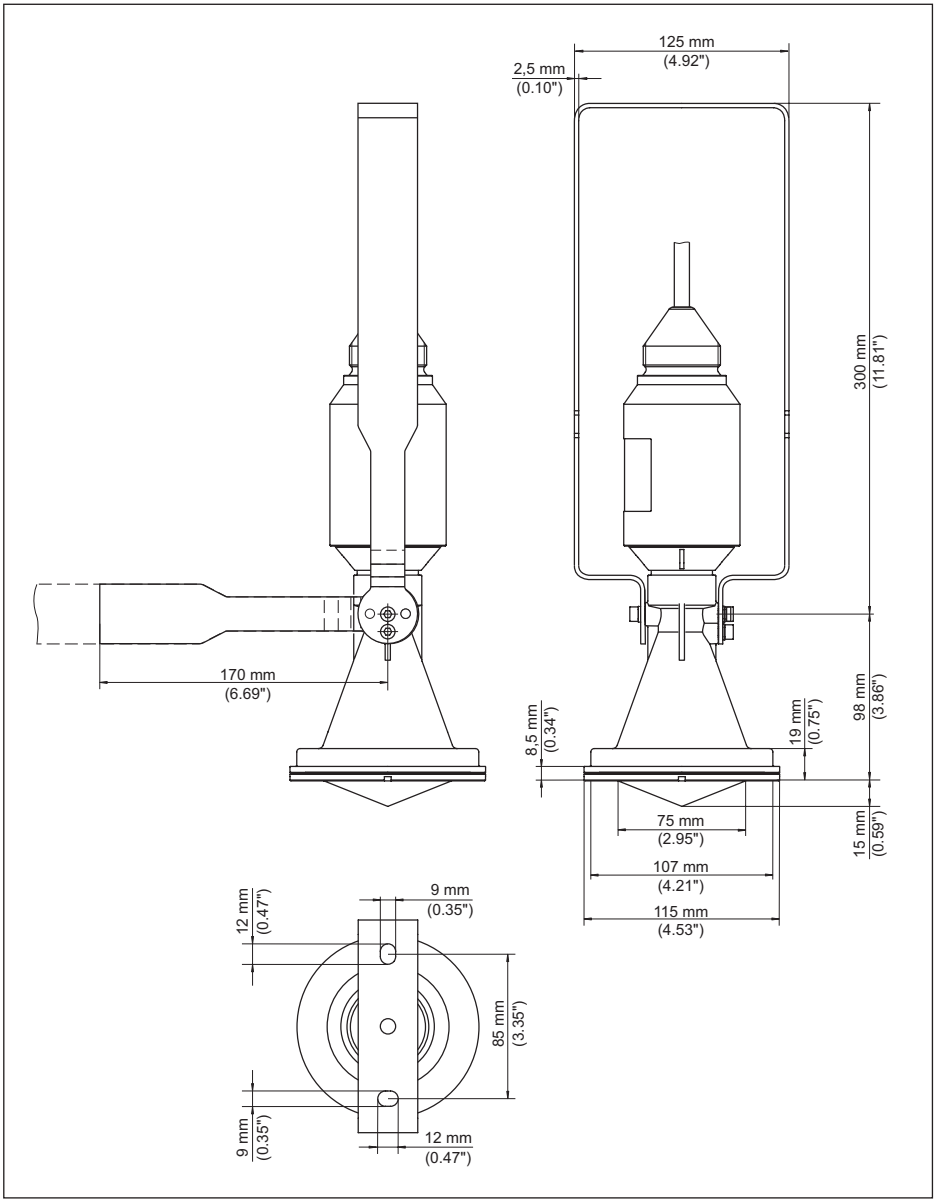

Fig. 43: VEGAPULS WL 61, version with mounting strap in 170 or 300 mm length

38061-EN-140407

VEGAPULS WL 61, version with compression flange

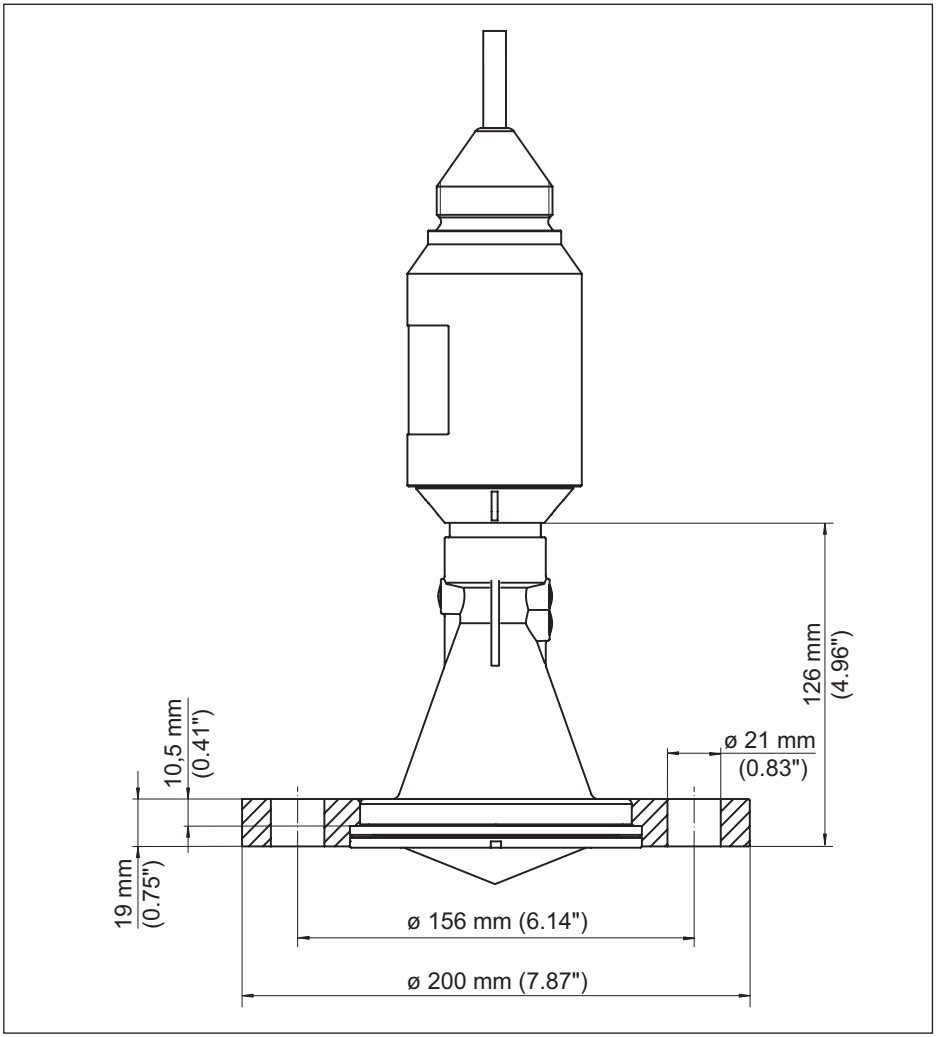

Fig. 44: VEGAPULS WL 61, compression flange DN 80/3"/JIS80

38061-EN-140407

VEGAPULS WL 61, version with adapter flange

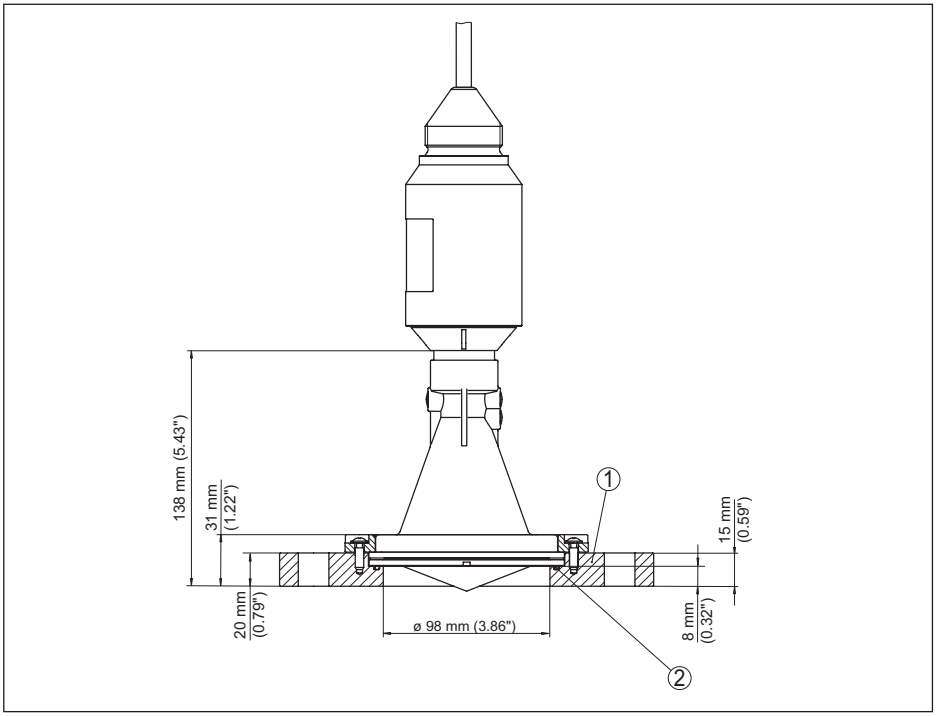

Fig. 45: VEGAPULS WL 61, adapter flange DN 100/4"/JIS 100 as well as DN 150/6"/JIS 150

1 Adapter flange
2 Seal

38061-EN-140407

11.4 Industrial property rights

VEGA product lines are global protected by industrial property rights. Further information see www.vega.com.

Only in U.S.A.: Further information see patent label at the sensor housing.

VEGA Produktfamilien sind weltweit geschützt durch gewerbliche Schutzrechte.

Nähere Informationen unter www.vega.com.

Les lignes de produits VEGA sont globalement protégées par des droits de propriété intellectuelle. Pour plus d'informations, on pourra se référer au site www.vega.com.

VEGA lineas de productos están protegidas por los derechos en el campo de la propiedad industrial. Para mayor información revise la pagina web www.vega.com.

Линии продукции фирмы ВЕГА защищаются по всему миру правами на интеллектуальную собственность. Дальнейшую информацию смотрите на сайте www.vega.com.

VEGA系列产品在全球享有知识产权保护。

进一步信息请参见网站<www.vega.com>。

11.5 Trademark

All the brands as well as trade and company names used are property of their lawful proprietor/originator.

INDEX

A
Accessories
– External indicating and adjustment unit 10
– Interface adapter 10
Application area 9

C
Check signal 36
Connection cable 20

D
DD (Device Description) 30

E
Echo curve memory 31
EDD (Enhanced Device Description) 30
Error messages 32
Event memory 31

F
Fault rectification 35
Flow measurement
– Khafagi-Venturi flume 19
– Rectangular flume 18
Foam generation 18
Functional principle 9

H
HART resistor 25

I
Inflowing medium 16
Installation position 15

M
Measured value memory 31
Measurement error 36
Mounting
– Angle 11
– Flange 13
– Straining clamp 11
– Strap 12

N
NAMUR NE 107
– Failure 33
– Function check 34
– Maintenance 34
– Out of specification 34

P
Packaging 9
Polarisation plane 14

R
Repair 39

S
Sensor orientation 17
Service hotline 39
Socket 16
Status messages 32
Storage 9

T
Type label 8

V
Vessel installations 17
Voltage supply 20

38061-EN-140407

Printing date:

All statements concerning scope of delivery, application, practical use and operating conditions of the sensors and processing systems correspond to the information available at the time of printing.
Subject to change without prior notice

© VEGA Grieshaber KG, Schiltach/Germany 2014

38061-EN-140407

VEGA Grieshaber KG
Am Hohenstein 113
77761 Schiltach
Germany

Phone +49 7836 50-0
Fax +49 7836 50-201
E-mail: info.de@vega.com
www.vega.com