Appendix G: Manual

Please see the following pages.

Operating Instructions

VEGAPULS 65

4 ... 20 mA/HART®

Contents

1 About this document 1.1
Function 41.2
Target group 41.3
Symbolism used 4

2 For your safety

3 Authorised personnel **6**
3.1 Appropriate use 6
3.2 Warning about misuse 6
3.3 General safety instructions 6
3.4 CE-Konformität 73.5
Safety information for Ex areas 7
3.6 Environmental instructions 7
3.7 Product description .....

4 Configuration **8**
4.1 Arbeitsweise 9
4.2 Adjustment 10
4.3 Storage and transport 10
4.4 Mounting .....

5 Mounting instructions **12**
5.1 Mounting procedure 12
5.2 Mounting examples 13

6 Connecting to power supply

7 Preparing the connection **18**
7.1 Connection procedure 19
7.2 Wiring plans, single chamber housing 20
7.3 Wiring plans, double chamber housing 22

8 Set-up with the indicating and adjustment module PLICSCOM
8.1 Short description 25

28437-EN-030701

8.2 Installing the indicating and adjustment module PLICSCOM 25
8.3 Adjustment system.....27
8.4 Set-up procedure.....28
8.5 Menu schematic.....33

9 Set-up with PACTware™ 9.1
Connecting the PC.....36**10**
Maintenance and fault rectification 10.1
Maintenance 3810.2
Fault rectification 3810.3
Repairing the instrument.....39

11 Dismounting
11.1 Dismounting procedure 40
11.2 Disposal.....40
11.3 Supplement .....
11.4 Technical data.....41
11.5 Dimensions 47

28437-EN-030701

1 About this document

1.1 Function

This operating instructions manual gives you all the information you need for quick set-up and safe operation of VEGAPULS 65. Please read this manual before you start set-up.

1.2 Target group

This operating instructions manual is directed to trained personnel. The contents of this manual should be made available to these personnel and put into practice by them.

1.3 Symbolism used

Information, tip, note
This symbol indicates helpful additional information.

Caution, warning, danger
This symbol informs you of a dangerous situation that could occur. Ignoring this cautionary note can impair the person and/or the instrument.

Ex applications
This symbol indicates special instructions for Ex applications.

● **List**
The dot set in front indicates a list with no implied sequence.

→ **Action**
This arrow indicates a single action.

28437-EN-030701

1 **Sequence**
Numbers set in front indicate successive steps in a procedure.

2 For your safety

2.1 Authorised personnel

All operations described in this operating instructions manual must be carried out only by trained and authorised specialist personnel. For safety and warranty reasons, any internal work on the instruments must be carried out only by qualified VEGA personnel.

2.2 Appropriate use

VEGAPULS 65 is a radar sensor for continuous level measurement.

2.3 Warning about misuse

Inappropriate or incorrect use of the instrument can give rise to application-specific hazards, e.g. vessel overfill or damage to system components through incorrect mounting or setting.

2.4 General safety instructions

VEGAPULS 65 is a high-tech instrument requiring the strict observance of standard regulations and guidelines. Depending on the instrument version, the emitting frequencies of all VEGAPULS sensors are in the C or K-band range. The exact emitting frequency is stated in the Technical data in the Supplement. Due to the low emitted power which is far below the internationally approved limit values there will be no health hazards if the instrument is used correctly. There are no restrictions to the use of the instrument on the outside of closed, metal vessels. The user must take note of the safety instructions of this operating instructions manual, the country-specific installation standards (e.g. the VDE regulations in Germany) as well as all prevailing safety regulations and accident prevention rules.

2.5 CE-Konformität

Der VEGAPULS 65 ist CE-konform zu EMVG (89/336/EWG) und NSR (73/23/EWG), sowie der R & TTE-Richtlinie (1999/5/EC) und erfüllt die Namur-Empfehlung NE 21.

Die Konformität wurde nach folgenden Normen bewertet:

- EMVG
  - Emission EN 61326: 1997 (Klasse B)
  - Immission EN 61326: 1997/A1: 1998
- NSR EN 61010-1: 2001
- I-ETS 300-440 Expert Opinion No. 0043052-01/SEE, Notified Body No. 0499

2.6 Safety information for Ex areas

Please note the Ex specific safety information for installation and operation in Ex areas. These safety instructions are part of the operating instructions manual and come with the Ex approved instruments.

2.7 Environmental instructions

Protection of the environment is one of our most important duties. That is why we have introduced an environment management system with the goal of continuously improving company environmental protection. The environment management system is certified acc. to DIN EN ISO 14001.

Please help us fulfil this obligation by observing the environmental instructions in this manual:

- Chapter "Storage and transport"
- Chapter "Disposal"

FCC Compliance

Changes or modifications not expressly approved by Ohmart/Vega could void the user's authority to operate the equipment.

This device complies with Part 15 rules. Operation is subject to the following conditions:

1. This device may not cause harmful interference
2. This device must accept any interference received, including interference that may cause undesired operation.

This equipment has been tested and found to comply with the limits for a Class B digital device, pursuant to Part 15 of the FCC Rules. These limits are designed to provide reasonable protection against harmful interference when the equipment is operated in a commercial environment.

This equipment generates, uses, and can radiate radio frequency energy and, if not installed and used in accordance with the instruction manual, may cause harmful interference to radio communications. Operation of this equipment in a residential area is likely to cause harmful interference, in which case the user will be required to correct the interference at his own expense.

3 Product description

3.1 Configuration

Scope of delivery

The scope of delivery encompasses:

- radar sensor VEGAPULS 65
- documentation
  - this operating instructions manual
  - Ex-specific safety instructions (with Ex versions) and if necessary further certificates.

Components

VEGAPULS 65 consists of the following components:

- process fitting with antenna system
- housing with electronics
- housing cover with indicating/adjustment module (option)

The components are available in different versions.

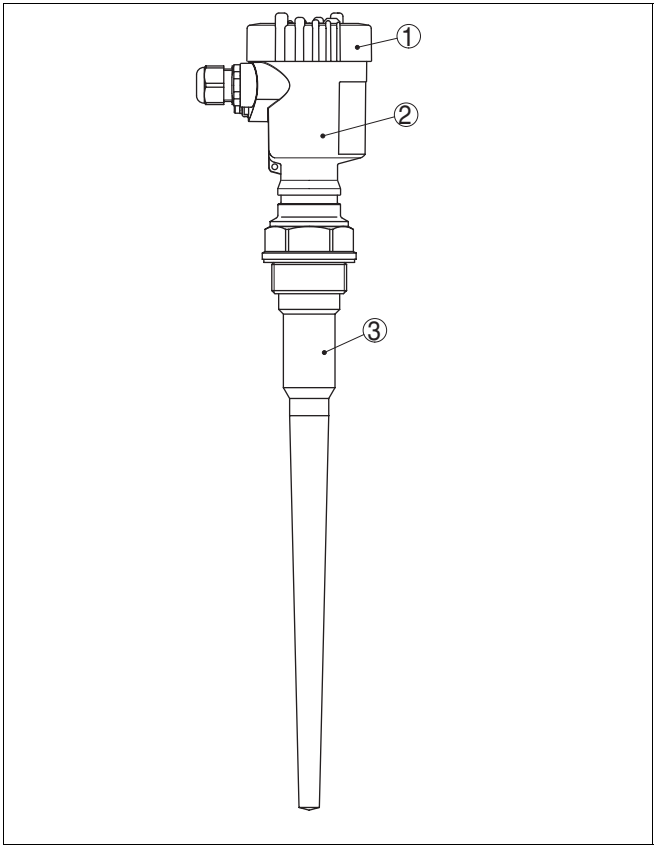

Fig. 1: Example of a VEGAPULS 65 with process fitting G1½A, rod antenna of PTFE and plastic housing

1 *Housing cover with belo indicating and adjustment module PLICSCOM (option)*
2 *Housing with electronics*
3 *Process fitting with antenna system*

3.2 Arbeitsweise

Area of application

VEGAPULS 65 is a radar sensor in C-band technology (emitting frequency approx. 6 GHz) for continuous level measurement. It is particularly suitable for vessels with small process fitting with aggressive liquids under easy to arduous process conditions.

Physical principle

The antenna of the radar sensor emits short radar impulses with a duration of approx. 1 ns. These impulses are reflected by the product and received by the antenna as echoes. The running time of the radar impulses from emission to receipt is proportional to the distance and hence to the level. The determined level is converted into an appropriate output signal and outputted as measured value.

Power supply

Two-wire electronics 4 … 20 mA/HART® for power supply and transmission of measured values on the same cable.

The power supply range can differ depending on the instrument version. The exact range is stated in the Technical data in the supplement.

3.3 Adjustment

VEGAPULS 65 can be adjusted with three different media:

- with the indicating and adjustment module PLICSCOM
- with the adjustment software acc. to FDT/DTM standard, e.g. PACTware™ and PC
- with HART® handheld

The entered parameters are generally saved in VEGAPULS 65, when adjusting with PACTware™ and PC, also optionally in the PC.

3.4 Storage and transport

Packaging

Your instrument was protected by packaging during transport. Its capacity to handle normal loads during transport is assured by a test acc. to DIN 55439.

The packaging consists of environment-friendly, recyclable cardboard. Dispose of the packing material via specialised recycling companies.

Storage and transport temperature

- Storage and transport temperature see Supplement, Technical data, Ambient conditions

28437-EN-030701

- Relative humidity 20 … 85 %

4 Mounting

4.1 Mounting instructions

Select installation position

Select an installation position you can easily reach for mounting, connecting as well as later retrofitting of an indicating and adjustment module PLICSCOM. The housing can be rotated 330° without the use of any tools. You can choose further positions of the adjustment and indicating module PLICSCOM (each displaced by 90°).

4.2 Mounting procedure

Protection against moisture

Protect your VEGAPULS 65 against moisture penetration.

→ Lead the connection cable downward in front of the cable entry

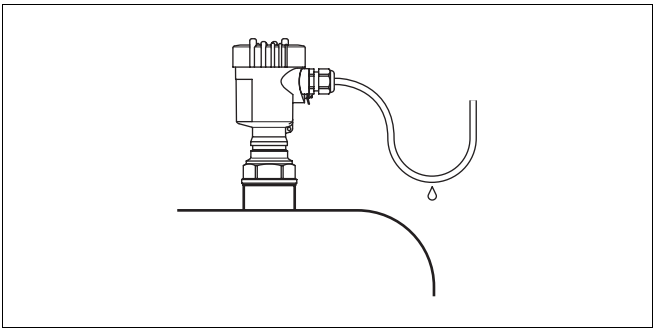

Fig. 2: Measures against moisture penetration

Rain and condensation water can thus drain off. This applies mainly to mounting outdoors, in areas where moisture is expected (e.g. by cleaning processes) or on cooled or heated vessels.

Use cable with round wire-cross section and tighten the cable entry.

4.3 Mounting examples

Measuring range

The reference plane for the measuring range of the sensors is the lower edge of the flange or the seal surface of the thread.

Information:
If the product reaches the antenna, buildup can form on the antenna which can cause measurement errors.

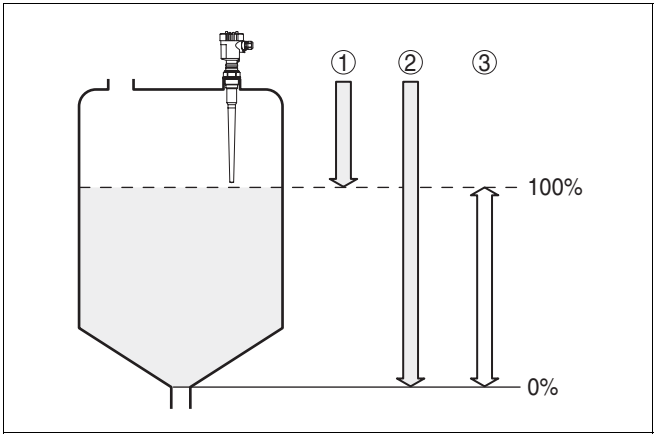

Fig. 3: Measuring range (operating range) and max. measuring distance

1 full
2 empty
3 Measuring range

Installation position

When mounting VEGAPULS 65 keep at least a distance of 500 mm to the vessel wall. If the sensor is installed in the center of dished or arched tank tops, multiple echoes can be caused which can be faded out by an appropriate adjustment (see Set-up).

If these distances cannot be ensured, a false echo memory should be carried out during set-up. This applies particularly if buildup on the vessel wall is expected. In this case, we recommend repeating the false echo memory later on with existing buildup.

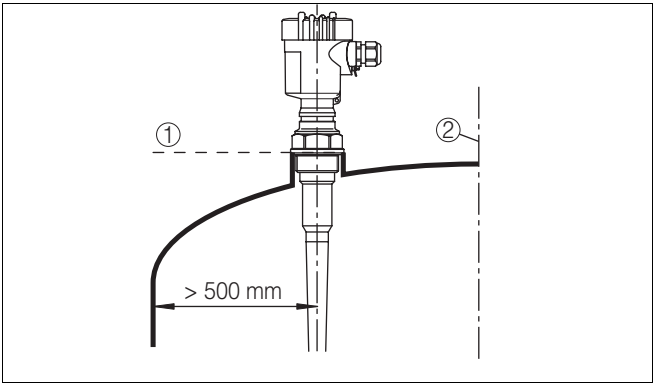

Fig. 4: Mounting on arched vessel tops

1 Reference plane
2 Vessel center or symmetry axis

In vessels with conical vessel bottom it can be an advantage mounting the sensor in the vessel center as then the measurement up to the vessel bottom is possible.

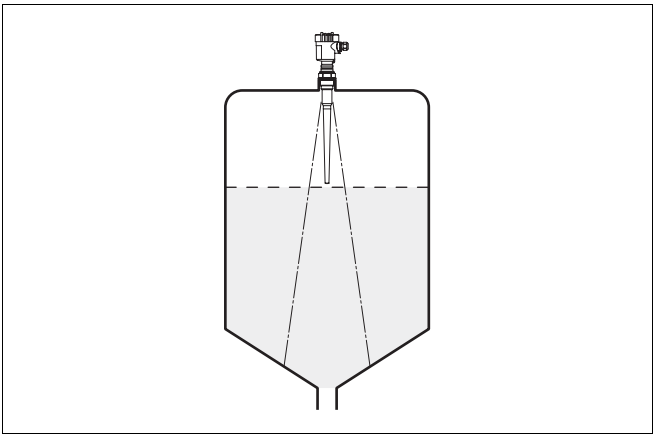

Fig. 5: Vessel with conical bottom

Socket

The active part of the antenna, i.e. the conical antenna part should protrude completely out of the socket.

To meet with the various socket dimensions, sensors for socket lengths up to 50, 100 and 250 mm are available.

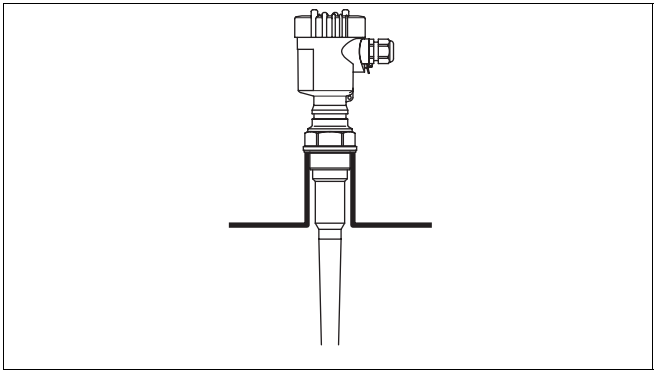

Fig. 6: Recommended socke mounting

In case of very large socket diameter, the active antenna part can be slighly recessed in the socket. For the standard version of VEGAPULS 65 the following thumb rule is applicable: socket diameter corresponds to max. socket height

Inflowing material

Do not mount the instruments in or above the filling stream. Ensure that you detect the product surface and not the inflowing material.

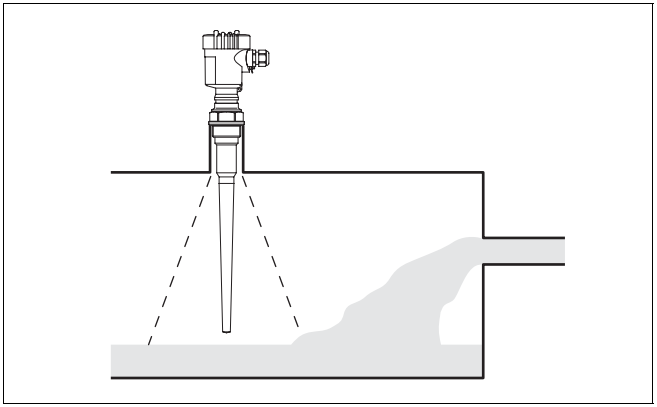

Fig. 7: Inflowing liquid

Sensor orientation

If possible, direct the sensor in liquids vertically to the sensor surface to reach optimum measuring results.

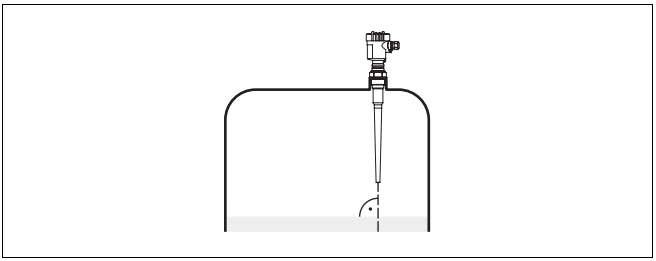

Fig. 8: Orientation in liquids

Vessel installations

The installation location of the radar sensor must be selected such that no installations or inflowing material cross the radar signal.

Vessel installations such as, for example, ladders, level switches, heating spirals, struts, erc. can cause false echoes superimposing the useful echo. Make sure when planning your measuring location that the radar signals have free access to the measured product.

In case of existing vessel installations, a false echo memory should be carried out during set-up.

If large vessel installations such as struts and supports cause false echoes, these can be weakened by supplementary measures. Small, incline sheets above the installations scatter the radar signals and avoid a direct false echo reflection.

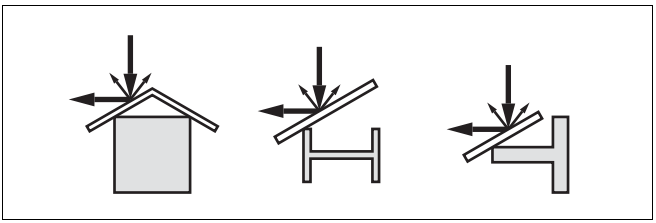

Fig. 9: Cover smooth profiles with deflectors

28437-EN-030701

Stirrers

In case of stirrers in teh vessel, the false echo memory should be carried out with active stirrers. This ensures that false reflections of the stirrer are saved in different positions.

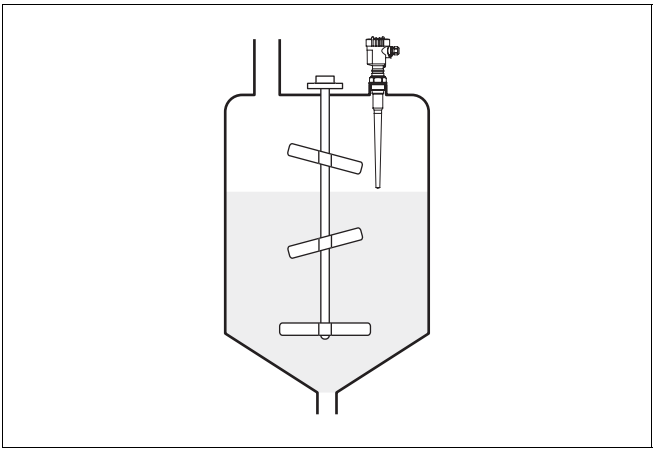

Fig. 10: Stirrers

Foam generation

By filling, stirrers and other processes in the vessel, dense foams can be generated on the product surface damping the emitted signal considerably.

If foams are causing measurement errors, the biggest possible radar antennas should be used.

VEGAFLEX sensors with guided microwave are unaffected by foam generation and are particularly suitable for such applications.

Pressure

In case of gauge or low pressure in the vessel you should seal the process fitting on the thread. Check in advance, if the seal material is resistant against the measured product. The max. permissible pressure is stated in the Technical data in the Supplement or on the type plate of the sensor.

5 Connecting to power supply

5.1 Preparing the connection

Note safety instructions

Always observe the following safety instructions:

- Connect only in the complete absence of line voltage
- If overvoltages are expected, overvoltage arresters should be installed.

Tip:
We recommend VEGA overvoltage arresters ÜS-F-LB-I and ÜSB 62-36G.X.

Take note of safety instructions for Ex applications

In hazardous areas you should take note of the appropriate regulations, conformity and type approval certificates of the sensors and power supply units.

Select voltage supply

Power supply and current signal are provided via the same two-wire connection cable. The power supply range can different depending on the instrument version. The exact range is stated in the Technical data in the Supplement.

Provide a reliable separation between the supply circuit acc. to DIN VDE 0106 part 101.

The VEGA power supply units VEGATRENN 149AEx, VEGASTAB 690, VEGADIS 371 as well as all VEGAMETs meet this requirement. When using one of these instruments, protection class III is ensured for VEGAPULS 65 .

Bear in mind the following factors regarding supply voltage:

- the reduction of output voltage of the power supply unit under nominal load (with a sensor current of 20.5 mA or 22 mA in case of fault signal)
- the influence of additional instruments in the circuit (see load values in Technical data)

Select connection cable

VEGAPULS 65 is connected with standard two-wire cable. An outer cable diameter of 5 … 9 mm ensures the seal effect of the cable entry. If electromagnetic interference is expected, we recommend the use of screened cable.

Cable screening and grounding

Connect the cable screen on both ends to ground potential. In the sensor, the screen must be connected directly to the inner ground terminal. The ground terminal on the outside of the housing must be connected to the potential equalisation.

If potential equalisation current are expected, the connection must be provided on the evaluation side via a ceramic capacitor (e.g. 1nF, 1500V). The low frequency potential equalisation current are now suppressed, however the protective effect for high frequency interference signals remains.

Select connection cable for Ex application

Take note of the corresponding installation regulations for Ex applications.

5.2 Connection procedure

Proceed as follows:

1 Unscrew the housing cover

2 Remove a probably existing indicating and adjustment module PLICSCOM by turning it lightly by the left

3 Loosen compression nut of the cable entry

4 Remove approx. 10 cm of the cable mantle, strip approx. 1 cm insulation from the ends of the individual wires

5 Insert the cable into the sensor through the cable entry

6 Lift the opening lug of the terminals with a screwdriver

7 Insert the wire ends into the open terminals according to the wiring plan

8 Press down the opening lug of the terminals, you will hear the terminal spring closing

9 Check the hold of the wires in the terminals by lightly pulling on them

10 Connect screen to the inner ground terminal and the outer ground terminal to the potential equalisation.

11 Tighten the compression nut of the cable entry, the seal ring must completely encircle the cable

12 Screw the housing cover back on

The electrical connection is finished.

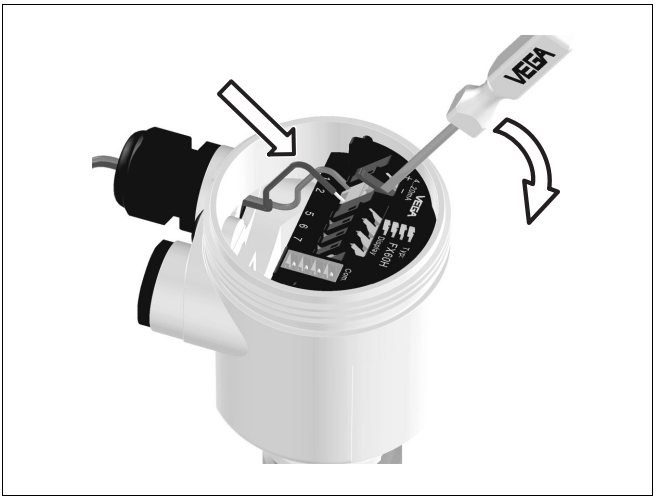

Fig. 11: Connection steps 6 and 7

5.3 Wiring plans, single chamber housing

Overview

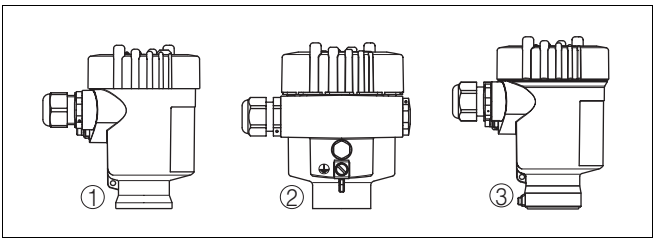

Fig. 12: Overview of the three material versions of the single chamber housing

1 Plastic

28437-EN-030701

2 *Aluminium*
3 *Stainless steel*

Top view, electronics and connection compartment

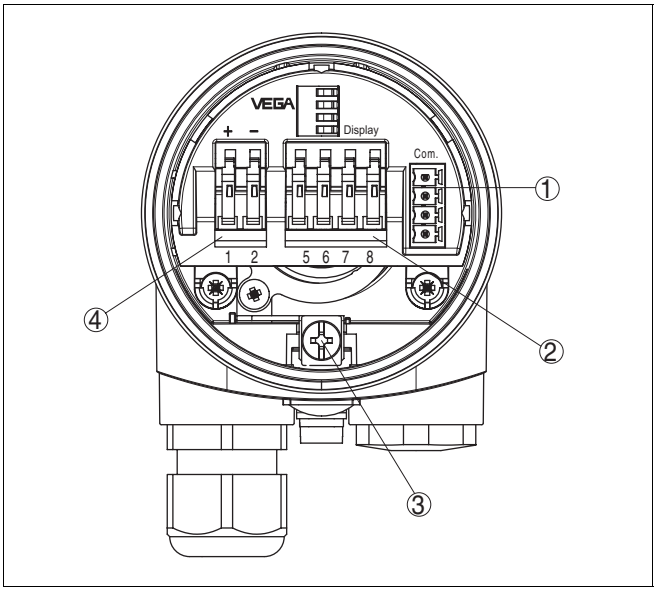

Fig. 13: Top view of the electronics and connection compartment

1 *Plug connector for VEGACONNECT (I²C interface)*
2 *Spring-loaded terminals for connection of the external indication VEGADIS 61*
3 *Ground terminal to connect cable screen*
4 *Spring-loaded terminals for power supply (4 ... 20 mA)*

Wiring plan

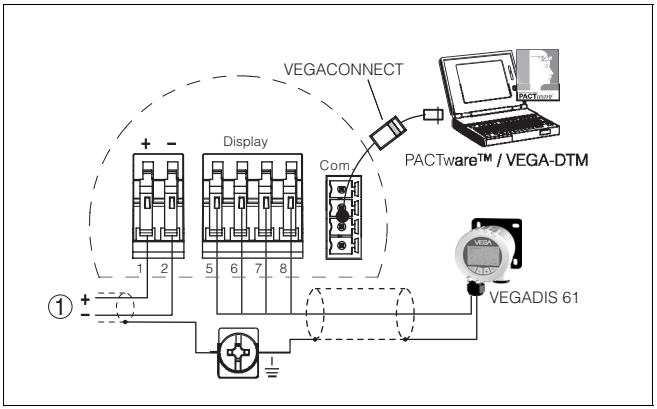

Fig. 14: Wiring plan, single chamber housing

1 4 ... 20 mA connection/power supply

5.4 Wiring plans, double chamber housing

Overview

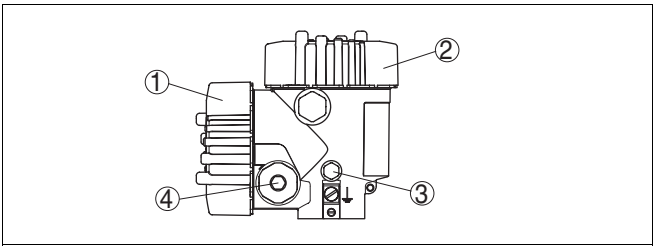

Fig. 15: Double chamber housing, non-Ex instrument or Exd instrument

1 Connection compartment
2 Electronics compartment
3 Breather element
4 Cable entry (pressure-tight with Exd)

Top view, electronics compartment

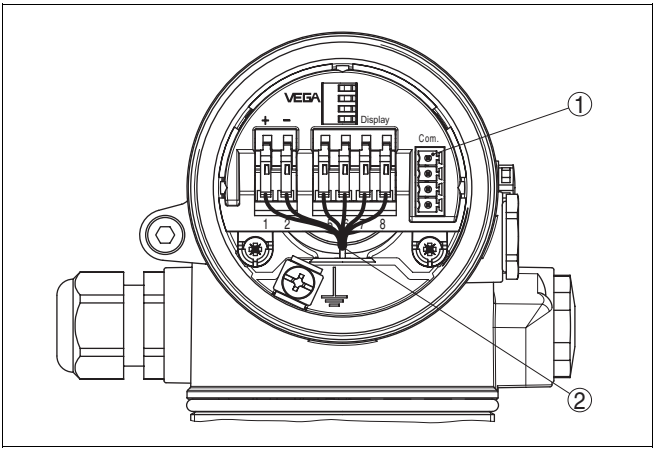

Fig. 16: Top view of the electronics compartment in double chamber housing

1 Plug connector for VEGACONNECT (I^2C interface)
2 Internal connection cable to the connection compartment

28437-EN-030701

Top view, connection compartment (non-Ex)

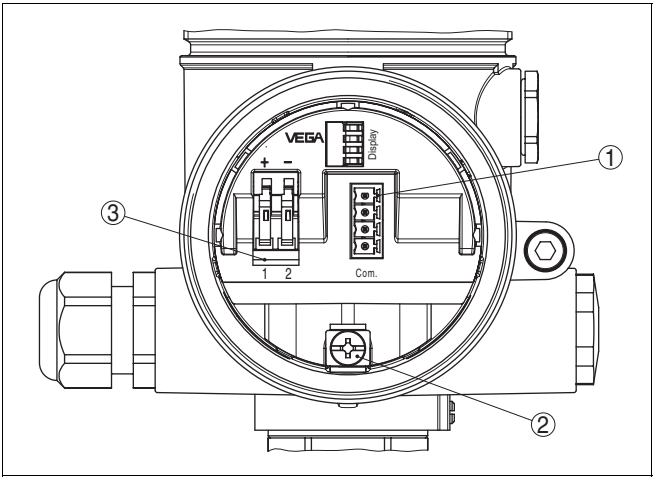

Fig. 17: Connection compartment, double chamber housing

1 *Plug connector for VEGACONNECT (I²C interface)*
2 *Ground terminal to connect cable screen*
3 *Spring-loaded terminals for power supply (4 ... 20 mA)*

Wiring plan (non-Ex)

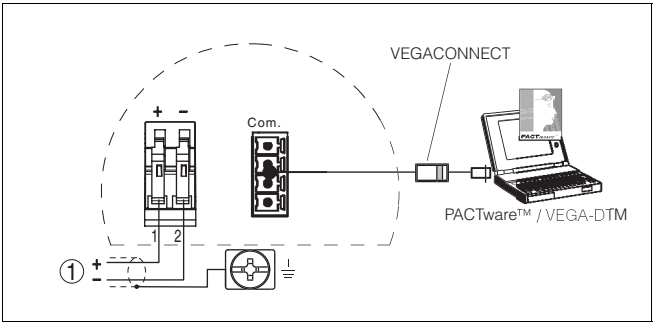

Fig. 18: Wiring plan, double chamber housing

1 *4 ... 20 mA connection/power supply*

Top view, connection compartment Exd

Information:
In Exd, the indicating and adjustment module PLICSCOM can only be used in the electronics compartment.

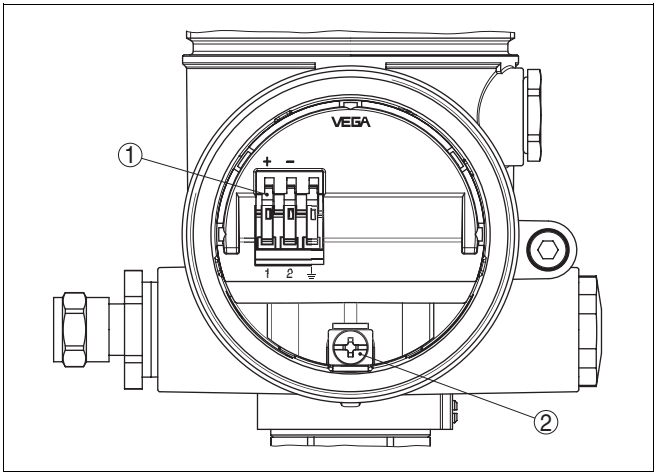

Fig. 19: Connection compartment, double chamber housing Exd

1 Spring-loaded terminals for power supply (4 ... 20 mA)
2 Ground terminal to connect cable screen

Wiring plan Exd

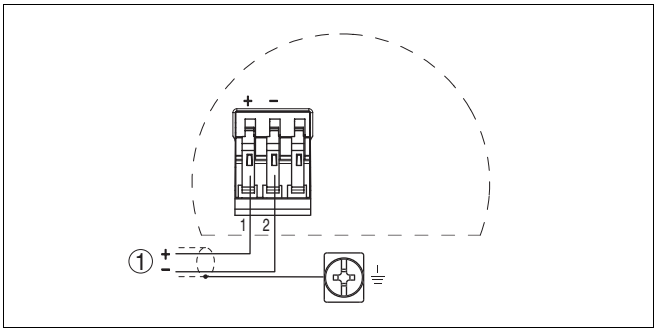

Fig. 20: Wiring plan, double chamber housing Exd

1 4 ... 20 mA connection/power supply

28437-EN-030701

6 Set-up with the indicating and adjustment module PLICSCOM

6.1 Short description

Function/Configuration

The indicating and adjustment module PLICSCOM is used for measured value display, adjustment and diagnosis. It can be mounted in the following housing versions and instruments:

- all sensors of the plics® instrument family as well as in the single and double chamber housing (optionally in electronics or connection compartment)
- external indicating instrument VEGADIS 61

6.2 Installing the indicating and adjustment module PLICSCOM

Insert/remove PLICSCOM

PLICSCOM can be inserted or removed at any time. An interruption of the power supply is not necessary.

To install, proceed as follows:

1 Unscrew housing cover

2 Place PLICSCOM in the desired position on the electronics (you can choose any one of four different positions - each displaced by 90°)

3 Press PLICSCOM lightly onto the electronics and turn it to the right until it snaps in.

4 Screw housing cover with inspection window tightly back on.

Removal is carried out in reverse order.

PLICSCOM is powered by the sensor, an additional connection is not necessary.

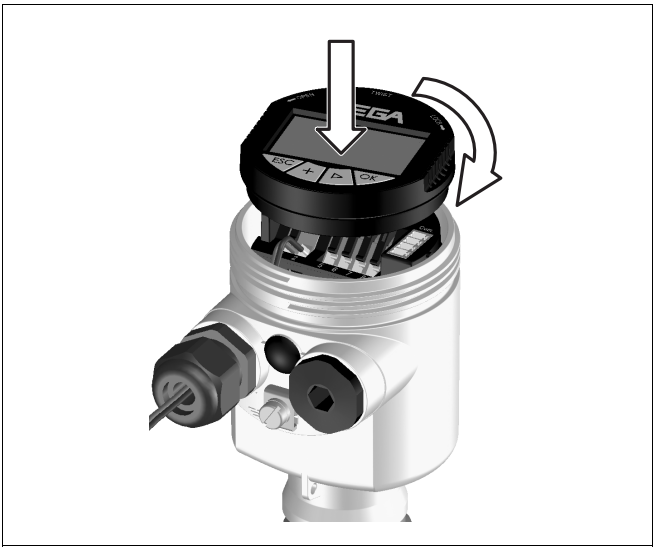

Fig. 21: Installation of PLICSCOM

Note:
If you want to retrofit a sensor with a PLICSCOM, an elevated cover with inspection window can be ordered from VEGA.

6.3 Adjustment system

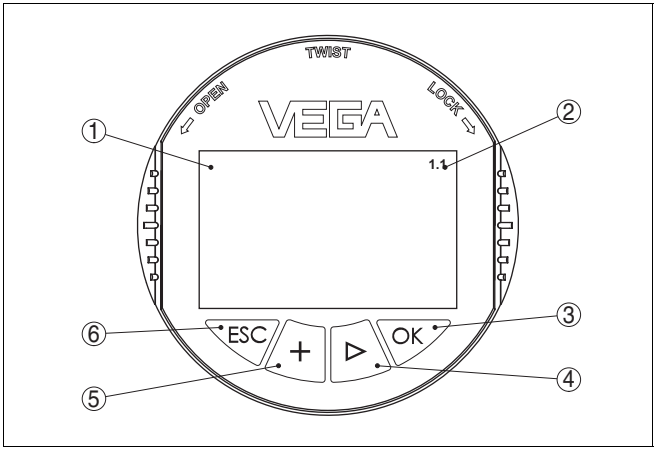

Fig. 22: Indicating and adjustment elements

1 ***LC display for indication of:***
- *measured value*
- *menu item*
- *parameter*

2 ***Indication of the menu item number***

3 ***OK key:***
- *move to the menu overview*
- *confirm selected menu*
- *edit parameter*
- *save value*

4 ***–> key to select:***
- *menu change*
- *list entry*
- *editing position*

5 ***+ key:***
- *modify value of a parameter*

6 ***ESC key:***
- *interrupt input*
- *jump to the next higher menu*

Adjustment system

The sensor is adjusted via the four keys of the indicating and adjustment module PLICSCOM. The LC display indicates the individual menu items. The functions are shown in the above illustration. Approx. 10 minutes after the last key is pressed, an automatic reset to measured value display is triggered. The values not confirmed with ***OK*** will get lost.

6.4 Set-up procedure

Switching on phase

After connection of VEGAPULS 65 to power supply, the instrument carries out a selfcheck for approx. one minute. The following steps are checked:

- internal check of the electronics
- indication of the instrument type, the firmware version as well as the sensor-TAG (sensor name)
- The output signal jumps briefly to the set interference current (HART sensor) or the status byte goes to failure (Profibus PA and FF sensors)

Then the actual measured value is displayed and the corresponding current (HART sensor) or the digital output signal is transmitted to the cable (Profibus PA and FF sensors). [1].

Parameter adjustment

As VEGAPULS 65 is a distance measuring instrument, the distance from the sensor to the product surface is detected. To have the real level displayed, an allocation of the measured distance to the percentage height must be carried out. To carry out this adjustment, the distance is entered with filled and emptied vessel. If these values are not known, it is possible to carry out the adjustment with distances of, e.g., 10% and 90%. Starting point for these distance values is always the seal surface of the thred or flange. With these settings the real level is calculated. Furthermore the operating range of the sensor is limited from maximum to the requested range.

The actual level is not important for this adjustment, the min./max. adjustment is always carried out without a level change. These settings can be already carried out without the instrument being installed.

In the main menu item Basic adjustment, the individual submenu items should be selected one after the other and provided with the correct parameters to ensure an optimum adjustment of the measurement.

[1] The volues correspond to the actual level as well as to the settings already carried out, e.g. default setting.

28437-EN-030701

Note:
First of all the address setting you be carried out with Profibus PA, Foundation Fieldbus and HART multidrop. You will find a description in the operating instructions manual of PLICSCOM.

Start your parameter adjustment with the menu items of the basic adjustment.

Carrying out min. adjustment

Proceed as follows:

1 Move from the measured value display to the main menu by pushing ***[OK]***.

> Basic adjustment
Display
Diagnosis
Service
Info

2 Select the menu item *Basic adjustment* with ***[–>]*** and confirm with ***[OK]***. Now the menu item Min. adjustment is displayed.

Min. adjustment 1.1
0.00 %
=
10.000 m(d)
8.000 m(d)

3 With ***[OK]*** you prepare the percentage value for editing and set the cursor to the requested position with ***[–>]*** . Set the requested % value with ***[+]***and save with ***[OK]*** . The cursor jumps now to the distance value.

4 Enter the suitable distance value in m for the empty vessel (e.g. distance from the sensor to the vessel bottom)

5 Save the settings with ***[OK]*** and move to max. adjustment with ***[–>]***.

Carrying out max. adjustment

Proceed as follows:

Carrying out max. adjustment

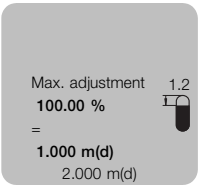

1 Prepare the percentage value for editing with ***[OK]*** and set the cursor to the requested position with ***[–>]*** . Set the requested % value with ***[+]*** and save with ***[OK]*** . The cursor jumps now to the distance value.

2 Enter the suitable distance value in m for the full vessel. Make sure that the max. level is below the radar antenna.

3 Save the settings with ***[OK]*** and move to medium selection with ***[–>]*** .

Medium selection

Each medium has different reflection characteristics. In liquids, fluctuating product surfaces and foam generation are additional interfering factors. In solids, these are dust generation, material cone and additional echoes caused by the vessel wall. To adapt the sensor to the different measurement conditions, you first should select in this menu item *Liquid* or *Solid* .

Depending on the conductivity and the dielectric constant, liquids have different reflection characteristics. Therefore you have different selection options under the menu item Liquid such as *Solvents*, *Chemical mixtures* and *Water based*.

Under Solids you can select in addition *Powder/dust*, *Granular/pellets* or *Ballast/pebbles* .

Through this additional selection, the sensor is adapted perfectly to the product and the reliability, particularly with bad reflection properties is considerable increased.

Enter the requested parameters via the corresponding keys, save your settings and jump to the next menu item with the***[–>]*** key.

Vessel form

Apart from the medium, also the vessel form can impair the measurement. To adapt the sensor to these measurement conditions, this menu item offers you different selection options depending on the selection Liquid or Solid. With *Liquid* these are *Storage tank*, *Stilling tube*, *Bypass tube*, *Stirrer vessel* or *Reaction vessel*, with *Solid Silo* or *Bunker*.

With standpipe or bypass tubes the radar impulses are transmitted by reflection inside the tube. This causes a shift of the running time independent of the inner diameter. This influence is compensated by adjusting the inner diameter.

Enter the requested parameters via the corresponding keys, save your settings and jump to the next menu item with the ***[–>]*** key.

Damping

To suppress fluctuation in the measured value display, e.g. caused by fluctuating product surfaces, an integration time can be adjustment. This time can be between 0 and 999 seconds. Make sure that also the reaction time of the complere measurement will be longer and the sensor reacts with a delay to quick measured value changes. In general, a time of a few seconds is sufficient to smooth the measured value display.

Enter the requested parameters via the corresponding keys, save your settings and jump to the next menu item with the ***[–>]*** key.

Linearisation curve

A linearisation is necessary for all vessels in which the vessel volume does not rise linear to the level, e.g. in cylindrical tank or spherical tank. Corresponding linearisation curves are preset for these vessels. They represent the ratio between percentag level and vessel volume. By activating the suitable curve, the percentage vessel volume is displayed correctly. If the volume should not be displayed in percent, but e.g. in l or kg, it is possible to set a scaling in the menu item Display.

Enter the requested parameter via the corresponding keys, save your settings and jump to the next menu item with the ***[–>]*** keys.

Sensor-TAG

In this menu item you can enter a clear designation for the sensor, e.g. the measurement loop name or the tank or product designation. In digital systems and the documentation of larger plants, a designation should be entered once for exact identification of individual measurement loops.

With this menu item the basic adjustment is finished and you can now return to the main menu with the ***[ESC]*** key.

False echo memory

High sockets or vessel installation such as e.g. struts or stirrers as well as buildup or weld joints on the vessel wall can cause false reflections which can impair the measurement. A false echo memory detects and marks these false echoes so that they are no longer taken into account for the level measurement. To create a false echo memory the vessel should be empty so that all probably existing false reflections can be detected.

Proceed as follows:

1 Move from the measured value display to the main menu by pushing ***[OK]***.

2 Select the menu item *Service* with ***[–>]*** and confirm with ***[OK]*** . Now the menu item False echo memory is displayed.

3 Confirm*False echo memory - change* with ***[OK]*** and select in the lower menu *Create new* . The real distance from the sensor to the product surface is entered. All false echoes in this range are detected by the sensor and saved after having confirmed with ***[OK]*** .

Note:
Check the distance to the product surface as the actual level will be saved as false echo in case of a wrong (too large) setting. Due to this, the level can no longer be detected in this range.

28437-EN-030701

Additional adjustment options

Additional adjustment and diagnosis possibilities such as e.g. scaling, simulation or echo curve presentation are shown in the following menu schematic. You will find a detailed description of these menu items in the operating instructions manual of the indicating and adjustment module PLICSCOM.

6.5 Menu schematic

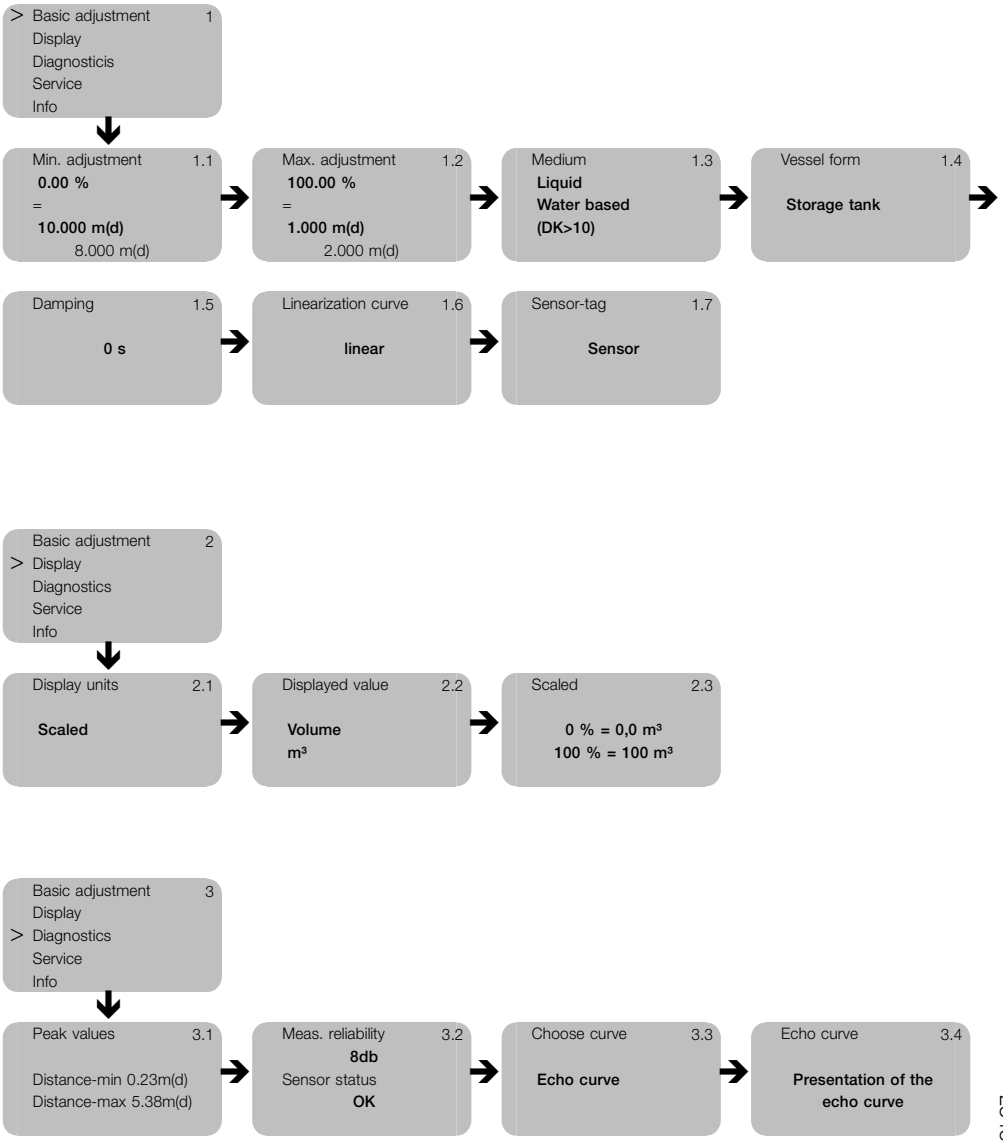

28437-EN-030701

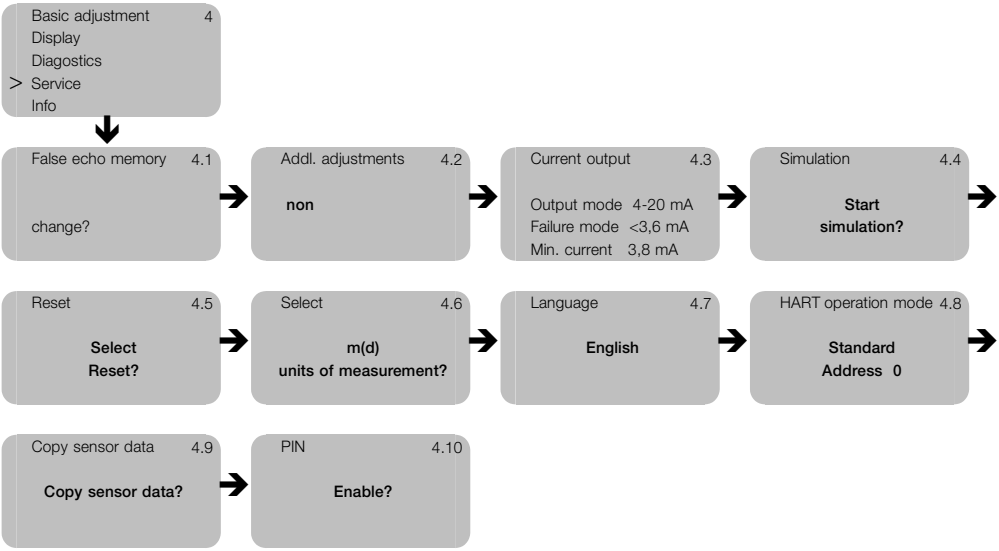
Basic adjustment 4
Display
Diagostics
> Service
Info
False echo memory 4.1
change?
Addl. adjustments 4.2
non
Current output 4.3
Output mode 4-20 mA
Failure mode <3,6 mA
Min. current 3,8 mA
Simulation 4.4
Start simulation?
Reset 4.5
Select Reset?
Select 4.6
m(d) units of measurement?
Language 4.7
English
HART operation mode 4.8
Standard
Address 0
Copy sensor data 4.9
Copy sensor data?
PIN 4.10
Enable?

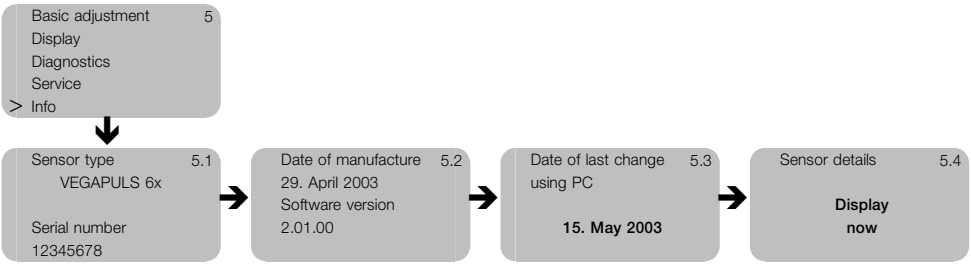
Basic adjustment 5
Display
Diagnostics
Service
> Info
Sensor type 5.1
VEGAPULS 6x
Serial number
12345678
Date of manufacture 5.2
29. April 2003
Software version
2.01.00
Date of last change 5.3
using PC
15. May 2003
Sensor details 5.4
Display now

7 Set-up with PACTware™

7.1 Connecting the PC

Connecting the PC directly to the sensor

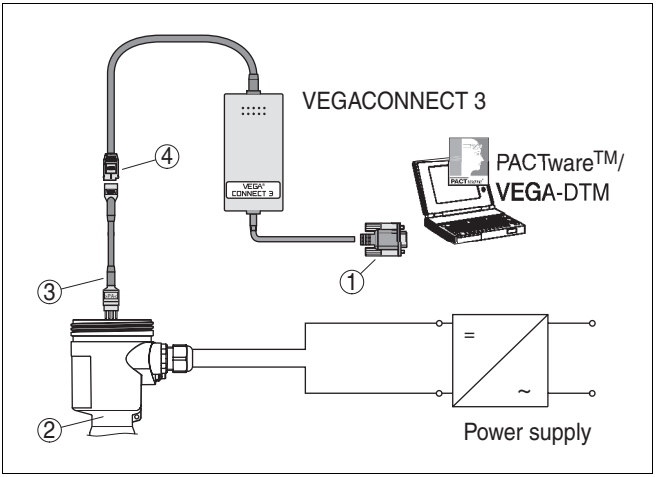

Fig. 23: PC connected directly to the sensor

1 RS232 connection
2 VEGAPULS 65
3 I²C adapter cable for VEGACONNECT 3
4 I²C bus plug

Necessary components:

- VEGAPULS 65
- PC with PACTware™ and suitable VEGA-DTM
- VEGACONNECT 3 with I²C adapter cable (article no. 2.27323)
- power supply unit

28437-EN-030701

Connecting the PC to the signal cable

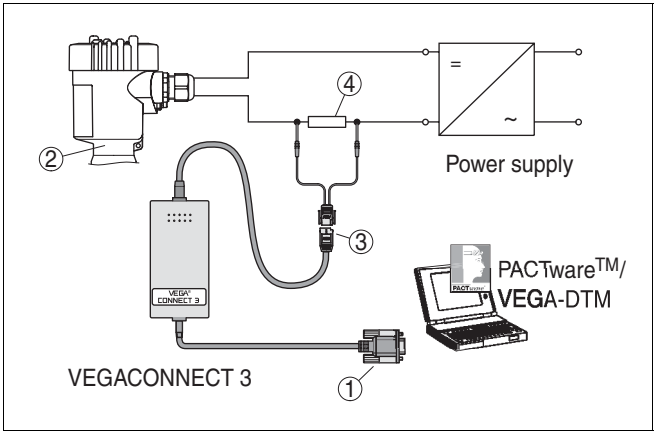

Fig. 24: PC connected to the signal cable

1 RS232 connection
2 VEGAPULS 65
3 VEGACONNECT 3 adapter cable for HART®
4 HART® resistance 250 Ohm

Necessary components:

- VEGAPULS 65
- PC with PACTware™ and suitable VEGA-DTM
- VEGACONNECT 3 with adapter cable for HART®
- HART® resistance 250 Ohm
- power supply unit

Note:
For power supply units with integrated HART® resistance there is no longer an additional external resistance necessary. In this case, VEGACONNECT 3 can be connected in parallel to the power supply.

Tip:
Further set-up steps are described in the operating instructions manual *DTM Collection/PACTware* attached to each CD and which can be downloaded from our homepage. A detailed description is available in the online help of PACTware™ and the VEGA-DTMs.

8 Maintenance and fault rectification

8.1 Maintenance

In normal operation, the VEGAPULS 65 is completely maintenance-free.

8.2 Fault rectification

Checking the 4 ... 20 mA signal

Connect a hand-multimeter with a suitable measuring range acc. to the wiring plan.

? 4 ... 20 mA signal not stable

- level fluctuations

→ set integration time via PLICSCOM or PACTware™

? 4 ... 20 mA signal missing

- incorrect connection to power supply

→ check connection acc. to chapter "Connection procedure" and correct if necessary acc. to chapter "Wiring plans"

- no power supply

→ check cables for line break, repair if necessary

- power supply too low or load resistance too high

→ check and adapt if necessary

? Current signal more than 22 mA or 0 mA

- electronics module defective

→ exchange instrument or return for repair

In Ex applications, the regulations for the wiring of intrinsically safe circuits must be observed.

28437-EN-030701

Fault messages via PLICSCOM

? E013

- no measured value available

→ sensor in boot phase

→ sensor does not find an echo, e.g. by wrong installation or wrong parameter adjustment

? E017

- Adjustment spann too small

→ carry out a new adjustment and increase the distance between min. and max. adjustment

? E036

- No operable sensor software

→ carry out a software update or return instrument for repair

? E042/E043

- Hardware error, electronics defective

→ exchange instrument or return for repair

8.3 Repairing the instrument

If it is necessary to repairVEGAPULS 65, please send the instrument to the following address:

VEGA Grieshaber KG; Repair department; Am Hohenstein 113; 77761 Schiltach/Germany

9 Dismounting

9.1 Dismounting procedure

Take note of chapters "Mounting" and "Connecting to power supply" and carry out the listed steps in reverse order.

9.2 Disposal

VEGAPULS 65 consists of materials which can be recycled by specialised recycling companies. We have purposely designed the electronic modules to be easily separable. Mark the instrument as scrap and dispose of it according to government regulations (electronic scrap ordinance, etc.).

Materials: see Technical data

If you cannot dispose of the instrument properly, please contact us about disposal methods or return.

10 Supplement

10.1 Technical data

General data

Materials, wetted parts	
– process fitting	thread G 1½ A and 1½ NPT: PVDF or stainless steel 1.4435, flange DN 50 ... DN 150 und 2" ... 6": stainless steel 1.4435
– antenna	PTFE
– seal between process fitting and antenna	PTFE
Materials, non-wetted parts	
– housing	plastic PBT (Polyester), Alu-die casting powder-coated, stainless steel 1.4435
– seal ring between housing and housing cover	NBR (Alu/stainless steel housing), silicone (plastic housing)
– inspection window in housing cover [2]	Lexan
– ground terminal	stainless steel 1.4571/1.4435
Weight	2.0 ... 4.0 kg (depending on the socket length of the antenna)

[2] Version with PLICSCOM.

28437-EN-030701

Output variable

Output signal	4 … 20 mA/HART®
Resolution	1.6 µA
Fault signal	current output unchanged, 20.5 mA, 22 mA, < 3.6 mA (adjustable)
Current limitation	22 mA
Integration time [3]	0 … 999 s, adjustable
Rise time	150 ms (ti : 0 s, 0 … 100 %)
Fulfilled Namur recommendation	NE 43

Input variable

Parameter	distance betweeen process fitting and product surface
Min. distance from the antenna tip	50 mm
Measuring range	20 m

Accuracy [4]

Reference conditions acc. to IEC 60770-1	
– temperature	18 ... 30°C
– relative humidity	45 ... 75 %
– pressure	860 ... 1060 mbar (86 ... 106 kPa)
Determination of characteristics	limit point adjustment acc. to DIN 16086
Characteristics	linear

[3] The interval required by the output signal to reach 63 % of the actual height after a jump of the input variable. After the triple integration time has passed, the output signal has reached 95 % of the jump height.

[4] Similar to DINV 19259-1 and IEC 60770-1

28437-EN-030701

Deviation in characteristics and characteristics [5]

Average temperature coefficient of the zero signal (temperature error)	0.06 %/10 K
Resolution, general	max. 1 mm
Frequency	C-band (6 GHz technology)
Interval	approx. 1 s
Beam angle at -3 dB	24°
Adjustment time [6]	> 1 s (depending on the parameter adjustment)
Pulse peak power	< 1 mW (<25 mW EIRP) [7]
Average power	250 µW
Received average emitted power[8]	
– distance 1 m	0.4 … 3.2 nW per cm² (0.4 … 3.2 x 10^{-9}W/cm²)
– distance 5 m	0.02 … 0.13 nW per cm²
Accuracy	see diagram

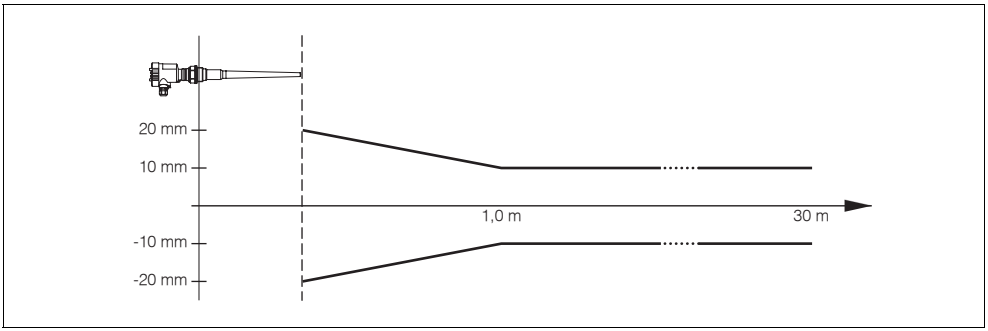

Fig. 25: Accuracy VEGAPULS 65

5) Relating to the nominal range, incl. hysteresis and repeatability, determined acc. to the limit point method
6) The adjustment time (also actuating time, response time or adjustment period) is the time the sensor requires to output the correct level (with max. 10 % deviation) after a sudden level change.
7) EIRP: emitted power relating to an isotropic radiator
8) Average emitted power reaching an object (electromagnetic energy) per cm² directly in front of the antenna. The received emitted power depends on the antenna version and the distance.

Ambient conditions

Ambient, storage and transport temperature	
– without PLICSCOM	-40 ... +80°C
– with PLICSCOM	-40 ... +70°C

Process conditions

Vessel pressure	100 … 300 kPa (-1 … 3 bar)
Process temperature (measured on the process fitting)	-20 ... +120°C (briefly 130°C)
Vibration resistance	mechanical vibrations with 4g and 5 … 100 Hz [9]

Electromechanical data

Cable entry/plug [10]	
– Single chamber housing	• 1 x cable entry M20x1.5 (cable-ø 5 … 9 mm), 1 x blind stopper M20x1.5 or: • 1x closing cap ½ NPT, 1x blind stopper ½ NPT or: • 1x plug M12x1, 1 x blind stopper M20x1.5
– Double chamber housing	• 1 x cable entry M20x1.5 (cable-ø 5 … 9 mm), 1 x blind stopper M20x1.5 or: • 1x closing cap ½ NPT, 1x blind stopper ½ NPT or: • 1x plug M12x1, 1 x blind stopper M20x1.5
– Spring-loaded terminals	for wire-cross sections up to 2.5 mm^2

[9] Tested acc. to the regulations of the German Lloyd, GL-directive 2
[10] Depending on the version

28437-EN-030701

Indicating and adjustment module PLICSCOM

Power supply and data transmission	through VEGAPULS via gold-coated slidng contacts (I^2C bus)
Display	LC display in full dot matrix
Adjustment elements	4 keys
Protection	IP 20 (mounted into VEGAPULS: IP 40)
Materials	
– housing	ABS
– inspection window	Polyester foil

Power supply

Power supply	
– non-Ex instrument	14 ... 36 V DC
– EEx ia instrument	14 ... 30 V DC
– Exd instrument	20 ... 36 V DC
Permissible residual ripple	
– < 100 Hz	Uss < 1 V
– 100 Hz … 10 kHz	Uss < 10 mV
Load	see diagram

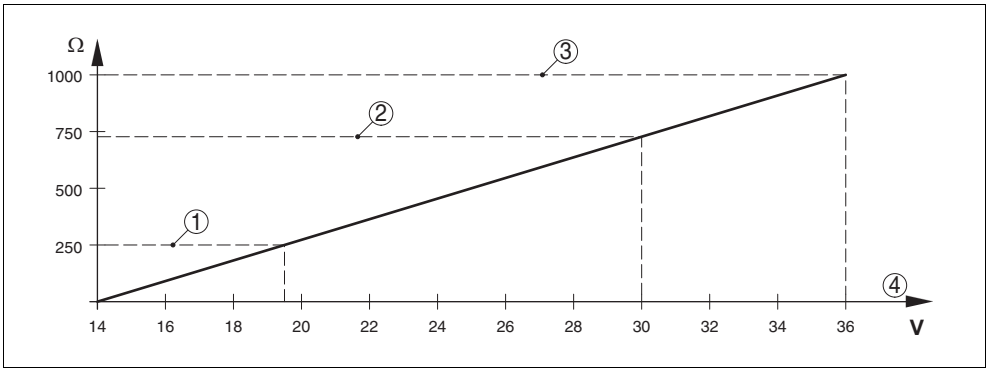

Fig. 26: Voltage diagram
1 HART® load
2 Voltage limit EEx ia instrument
3 Voltage limit non-Ex instrument/Exd instrument
4 Supply voltage

Electrical protective measures

Protection	IP 66/IP 67
Overvoltage category	III
Protection class	II

28437-EN-030701

Approvals [11)]

ATEX II 1G, 1/2G, 2G EEx ia IIC T6,
ATEX II 1/2G, 2G EEx d ia IIC T6, WHG,
ship approvals

10.2 Dimensions

Housing

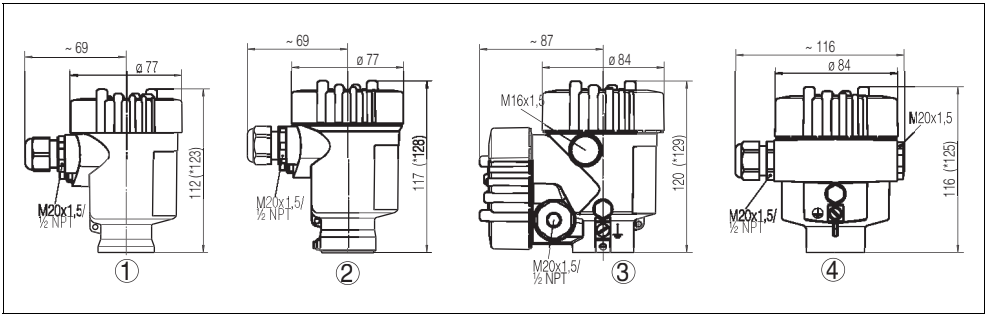

Fig. 27:
1 Plastic housing (dimension with integrated PLICSCOM)*
2 Stainless steel housing (dimension with integrated PLICSCOM)*
3 Aluminium double chamber housing (dimension with integrated PLICSCOM)*
4 Aluminium housing (dimension with integrated PLICSCOM)*

[11)] Deviating data with Ex applications: see separate safety instructions

VEGAPULS 65

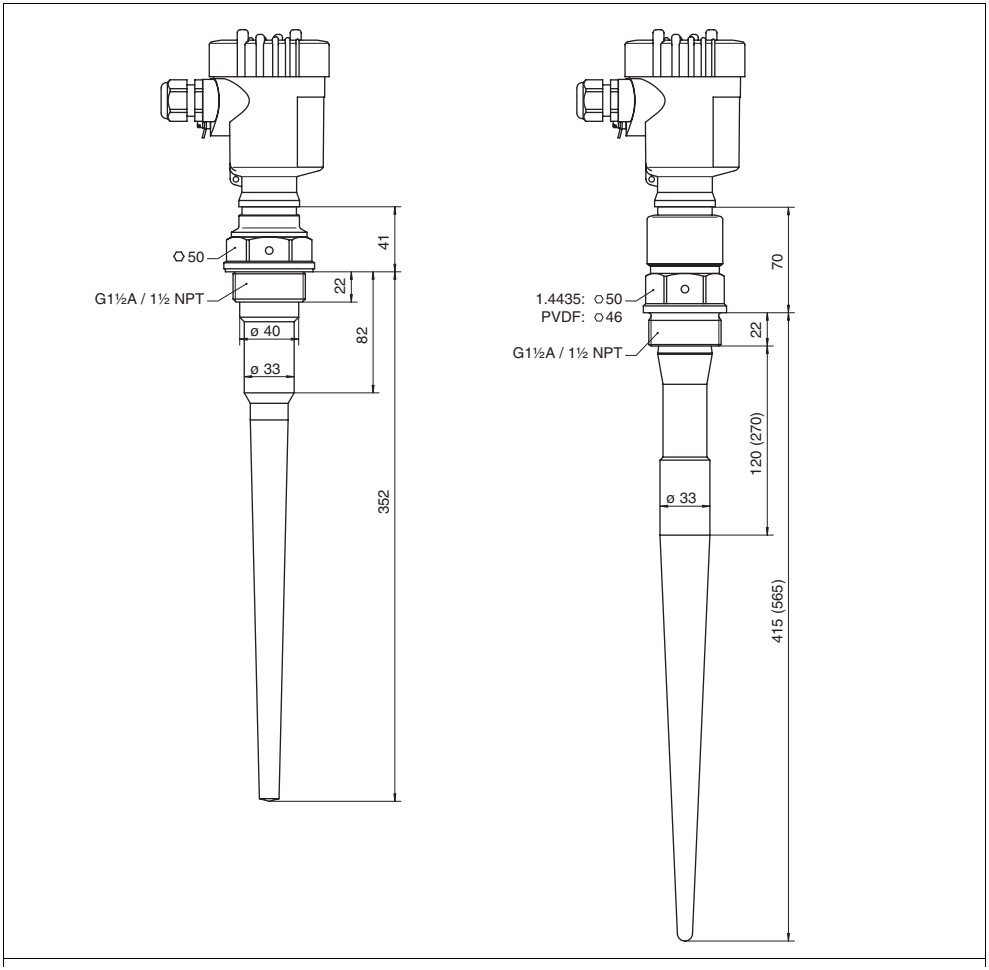

Fig. 28: VEGAPULS 65in screwed version

28437-EN-030701

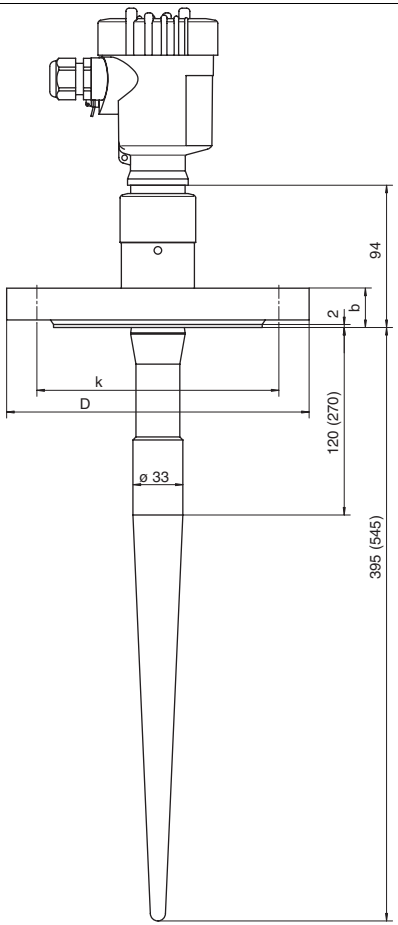

	D	b	k	d
DN 50 PN 40	165	20	125	4xø18
DN 80 PN 40	200	24	160	8xø18
DN 100 PN 16	220	20	180	8xø18
DN 150 PN 16	285	22	240	8xø22
2" 150 lb	152,4	19,1	120,7	4xø19,1
3" 150 lb	190,5	23,9	152,4	4xø19,1
4" 150 lb	228,6	23,9	190,5	8xø19,1
6" 150 lb	279,4	25,4	241,3	8xø22,4

Fig. 29: VEGAPULS 65 in flange version

28437-EN-030701

VEGA Grieshaber KG
Am Hohenstein 113
77761 Schiltach
Germany
Phone +49 7836 50-0
Fax +49 7836 50-201
E-mail: info@de.vega.com
www.vega.com

All statements concerning scope of delivery, application, practical use and operating conditions of the sensors and processing systems correspond to the information available at the time of printing.

28437-EN-030701

Operating Instructions

VEGAPULS 66

4 ... 20 mA/HART®

Contents

1 About this document

1.1 Function....4
1.2 Target group....4
1.3 Symbolism used....4

2 For your safety

2.1 Authorised personnel....6
2.2 Appropriate use....6
2.3 Warning about misuse....6
2.4 General safety instructions....6
2.5 CE-Konformität....7
2.6 Safety information for Ex areas....7
2.7 Environmental instructions....7

3 Product description

3.1 Configuration....8
3.2 Arbeitsweise....9
3.3 Adjustment....10
3.4 Storage and transport....10

4 Mounting

4.1 Mounting instructions....11
4.2 Mounting procedure....11
4.3 Mounting examples....12

5 Connecting to power supply

5.1 Preparing the connection....20
5.2 Connection procedure....21
5.3 Wiring plans, single chamber housing....22
5.4 Wiring plans, double chamber housing....24

6 Set-up with the indicating and adjustment module PLICSCOM

6.1 Short description....27
6.2 Installing the indicating and adjustment module PLICSCOM....27
6.3 Adjustment system....29

28438-EN-030701

6.4 Set-up procedure.....30
6.5 Menu schematic.....35

7 Set-up with PACTware™

7.1 Connecting the PC.....38

8 Maintenance and fault rectification

8.1 Maintenance 40
8.2 Fault rectification 40
8.3 Repairing the instrument.....41

9 Dismounting

9.1 Dismounting procedure 42
9.2 Disposal.....42

10 Supplement

10.1 Technical data 43
10.2 Dimensions 49

1 About this document

1.1 Function

This operating instructions manual gives you all the information you need for quick set-up and safe operation of VEGAPULS 66. Please read this manual before you start set-up.

1.2 Target group

This operating instructions manual is directed to trained personnel. The contents of this manual should be made available to these personnel and put into practice by them.

1.3 Symbolism used

Information, tip, note
This symbol indicates helpful additional information.

Caution, warning, danger
This symbol informs you of a dangerous situation that could occur. Ignoring this cautionary note can impair the person and/or the instrument.

Ex applications
This symbol indicates special instructions for Ex applications.

- **List**
  The dot set in front indicates a list with no implied sequence.

→ **Action**
This arrow indicates a single action.

28438-EN-030701

1 **Sequence**
Numbers set in front indicate successive steps in a procedure.

2 For your safety

2.1 Authorised personnel

All operations described in this operating instructions manual must be carried out only by trained and authorised specialist personnel. For safety and warranty reasons, any internal work on the instruments must be carried out only by qualified VEGA personnel.

2.2 Appropriate use

VEGAPULS 66 is a radar sensor for continuous level measurement.

2.3 Warning about misuse

Inappropriate or incorrect use of the instrument can give rise to application-specific hazards, e.g. vessel overfill or damage to system components through incorrect mounting or setting.

2.4 General safety instructions

VEGAPULS 66 is a high-tech instrument requiring the strict observance of standard regulations and guidelines. Depending on the instrument version, the emitting frequencies of all VEGAPULS sensors are in the C or K-band range. The exact emitting frequency is stated in the Technical data in the Supplement. Due to the low emitted power which is far below the internationally approved limit values there will be no health hazards if the instrument is used correctly. There are no restrictions to the use of the instrument on the outside of closed, metal vessels. The user must take note of the safety instructions of this operating instructions manual, the country-specific installation standards (e.g. the VDE regulations in Germany) as well as all prevailing safety regulations and accident prevention rules.

2.5 CE-Konformität

Der VEGAPULS 66 ist CE-konform zu EMVG (89/336/EWG) und NSR (73/23/EWG), sowie der R & TTE-Richtlinie (1999/5/EC) und erfüllt die Namur-Empfehlung NE 21.

Die Konformität wurde nach folgenden Normen bewertet:

- EMVG
  - Emission EN 61326: 1997 (Klasse B)
  - Immission EN 61326: 1997/A1: 1998
- NSR EN 61010-1: 2001
- I-ETS 300-440 Expert Opinion No. 0043052-01/SEE, Notified Body No. 0499

2.6 Safety information for Ex areas

Please note the Ex specific safety information for installation and operation in Ex areas. These safety instructions are part of the operating instructions manual and come with the Ex approved instruments.

2.7 Environmental instructions

Protection of the environment is one of our most important duties. That is why we have introduced an environment management system with the goal of continuously improving company environmental protection. The environment management system is certified acc. to DIN EN ISO 14001.

Please help us fulfil this obligation by observing the environmental instructions in this manual:

- Chapter "Storage and transport"
- Chapter "Disposal"

FCC Compliance

Changes or modifications not expressly approved by Ohmart/Vega could void the user's authority to operate the equipment.

This device complies with Part 15 rules. Operation is subject to the following conditions:

1. This device may not cause harmful interference
2. This device must accept any interference received, including interference that may cause undesired operation.

This equipment has been tested and found to comply with the limits for a Class B digital device, pursuant to Part 15 of the FCC Rules. These limits are designed to provide reasonable protection against harmful interference when the equipment is operated in a commercial environment.

This equipment generates, uses, and can radiate radio frequency energy and, if not installed and used in accordance with the instruction manual, may cause harmful interference to radio communications. Operation of this equipment in a residential area is likely to cause harmful interference, in which case the user will be required to correct the interference at his own expense.

3 Product description

3.1 Configuration

Scope of delivery

The scope of delivery encompasses:

- radar sensor VEGAPULS 66
- documentation
  - this operating instructions manual
  - Ex-specuific safety instructions (with Ex versions) and if necessary further certificates.

Components

VEGAPULS 66 consists of the following components:

- process fitting with antenna system
- housing with electronics
- housing cover with indicating/adjustment module (option)

The components are available in different versions.

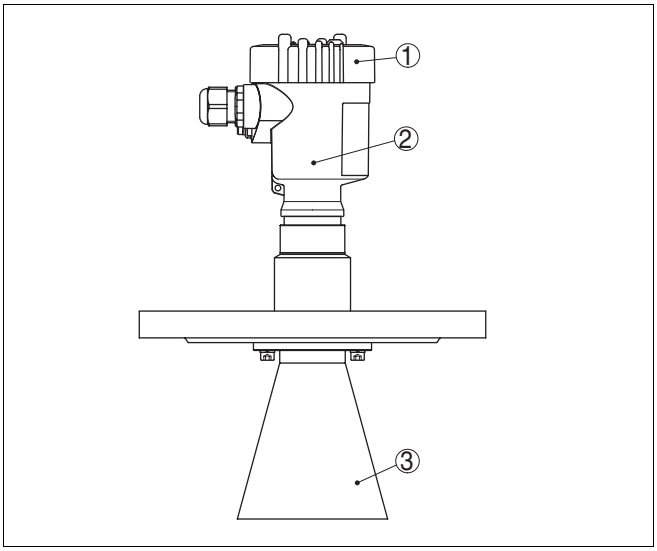

Fig. 1: Example of a VEGAPULS 66 with flange DN 150, horn antenna and plastic housing

1 Housing cover with below indicating and adjustment module PLICSCOM (option)
2 Housing with electronics
3 Process fitting with antenna system

28438-EN-030701

3.2 Arbeitsweise

Area of application

VEGAPULS 66 is a radar sensor in C-band technology (emitting frequency approx. 6 GHz) for continuous level measurement.

A special version of VEGAPULS 66 is available for the appropriate area of application. The version with flange and horn antenna is particularly suitable for the measurement of liquids and solids under arduous process conditions such as nuildup, condensation or foam generation as well as heavy product movements. For arduous process conditions such as 160 bar process pressure and 400°C process temperature, a graphite seal and a ceramic antenna cone are available. The version without antenna horn forms the antenna system in conjunction with a measuring tube (surge or bypass tube) and is therefore particularly suitable for the measurement of solvents and liquid gases. This applies also to the version supplied with the standpipe already screwed on.

Physical principle

The antenna of the radar sensor emits short radar impulses with a duration of approx. 1 ns. These impulses are reflected by the product and received by the antenna as echoes. The running time of the radar impulses from emission to receipt is proportional to the distance and hence to the level. The determined level is converted into an appropriate output signal and outputted as measured value.

Power supply

Two-wire electronics 4 … 20 mA/HART® for power supply and transmission of measured values on the same cable.

The power supply range can differ depending on the instrument version. The exact range is stated in the Technical data in the supplement.

3.3 Adjustment

VEGAPULS 66 can be adjusted with three different media:

- with the indicating and adjustment module PLICSCOM
- with the adjustment software acc. to FDT/DTM standard, e.g. PACTware™ and PC
- with HART® handheld

The entered parameters are generally saved in VEGAPULS 66, when adjusting with PACTware™ and PC, also optionally in the PC.

3.4 Storage and transport

Packaging

Your instrument was protected by packaging during transport. Its capacity to handle normal loads during transport is assured by a test acc. to DIN 55439.

The packaging consists of environment-friendly, recyclable cardboard. Dispose of the packing material via specialised recycling companies.

Storage and transport temperature

- Storage and transport temperature see Supplement, Technical data, Ambient conditions
- Relative humidity 20 … 85 %

4 Mounting

4.1 Mounting instructions

Select installation position

Select an installation position you can easily reach for mounting, connecting as well as later retrofitting of an indicating and adjustment module PLICSCOM. The housing can be rotated 330° without the use of any tools. You can choose further positions of the adjustment and indicating module PLICSCOM (each displaced by 90°).

4.2 Mounting procedure

Protection against moisture

Protect your VEGAPULS 66 against moisture penetration.

→ Lead the connection cable downward in front of the cable entry

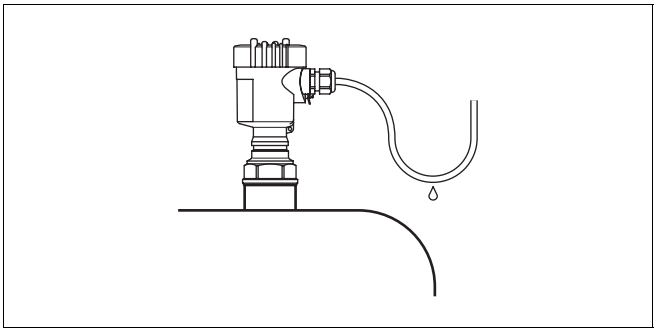

Fig. 2: Measures against moisture penetration

Rain and condensation water can thus drain off. This applies mainly to mounting outdoors, in areas where moisture is expected (e.g. by cleaning processes) or on cooled or heated vessels.

Use cable with round wire-cross section and tighten the cable entry.

4.3 Mounting examples

Measuring range

The reference plane for the measuring range of the sensors is the lower edge of the flange and the seal surface of the thread.

Information:
If the product reaches the antenna, buildup can form on the antenna which can cause measurement errors.

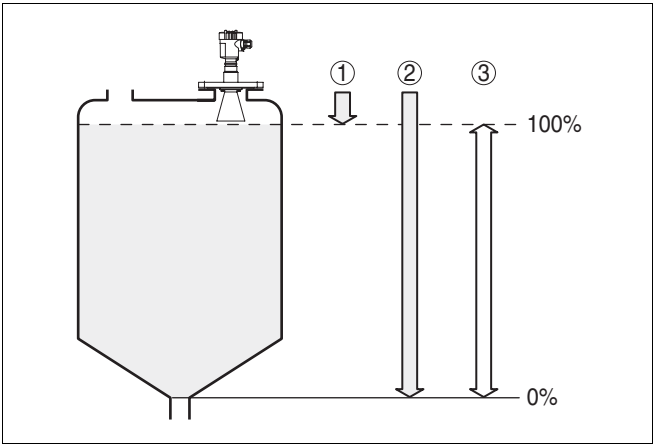

Fig. 3: Measuring range (operating range) and max. measuring distance

1 full
2 empty
3 Measuring range

Installation position

When mounting VEGAPULS 66 keep at least a distance of 500 mm to the vessel wall. If the sensor is installed in the center of dished or arched tank tops, multiples echoes can be caused which can be faded out by an appropriate adjustment (see Set-up).

If these distances cannot be ensured, a false echo memory should be carried out during set-up. This applies particularly if buildup on the vessel wall is expected. In this case, we recommend repeating the false echoe memory later on with existing buildup.

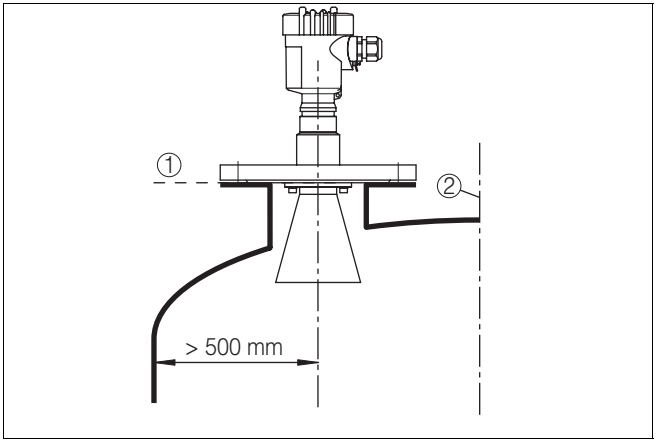

Fig. 4: Mounting on arched vessel tops

1 Reference plane
2 Vessel center or symmetry axis

In vessels with conical vessel bottom it can be an advantage mounting the sensor in the vesel center as then the measurement up to the vessel bottom is possible.

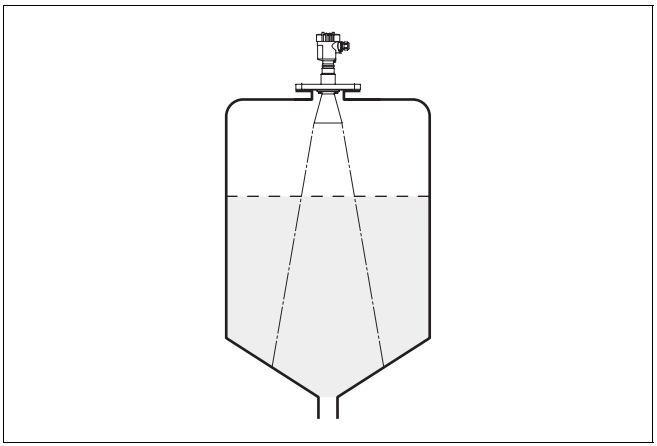

Fig. 5: Vessel with conical bottom

Socket

Preferrably the socket piece should be dimensioned in such a way that the antenna end protrudes min. 10 mm out of the socket.

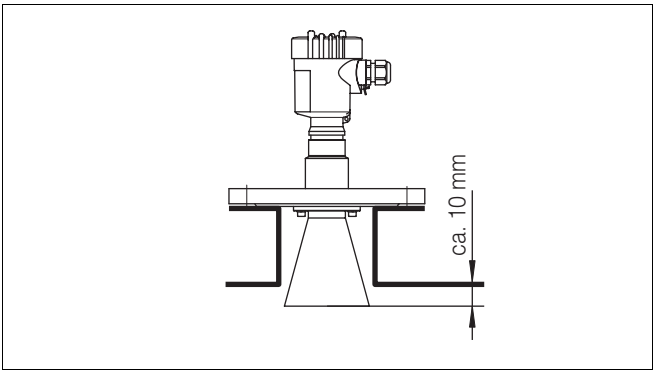

Fig. 6: Recommended socket mounting

If the socket height cannot be maintained, an antenna extension must be used.This extension avoids false reflections by the socket.

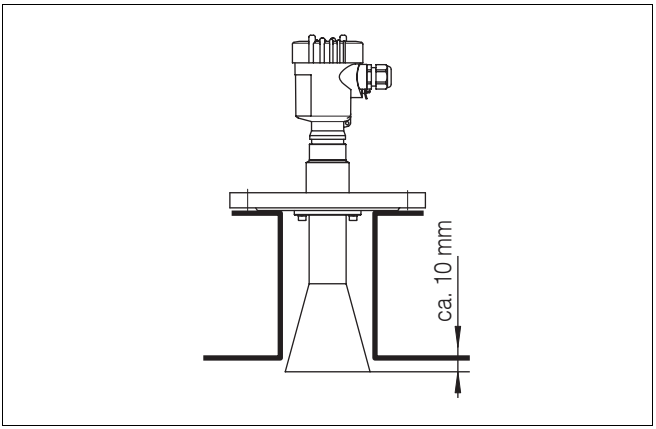

Fig. 7: Tube extension

Inflowing material

Do not mount the instruments in or above the filling stream. Ensure that you detect the product surface and not the inflowing material.

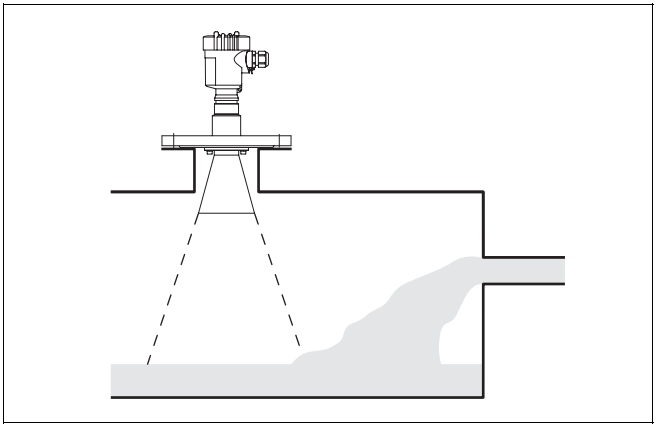

Fig. 8: Inflowing liquid

Sensor orientation

If possible, direct the sensor in liquids vertically to the sensor surface to reach optimum measuring results.

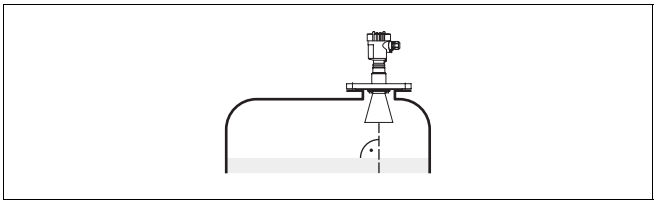

Fig. 9: Orientation in liquids

Vessel installations

The installation location of the radar sensor must be selected such that no installations or inflowing material cross the radar signals.

Vessel installations such as, for example, ladders, limit switches, heating spirals, struts etc. can cause false echoes superimposing the useful echo. Make sure when planning your measuring location that the radar signals have free access to the measured product.

In case of existing vessel installations, a false echo memory should be carried out during set-up.

If large vessel installations such as struts and supports cause false echoes, these can be weakened by supplementary measures. Small, inclined sheets above the installations scatter the radar signals and avoide a direct false echo reflection.

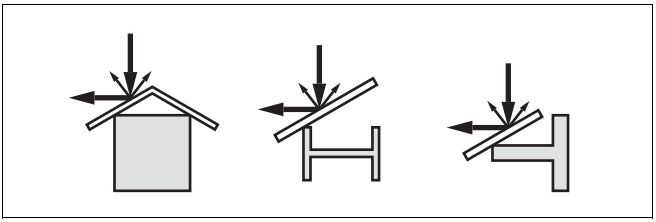

Fig. 10: Cover smooth profiles with deflectors

Stirrers

In case of stirrers in the vessel, a false echo memory should be carried out with active stirrers. This ensures that false reflections of the stirrer are saved in different positions.

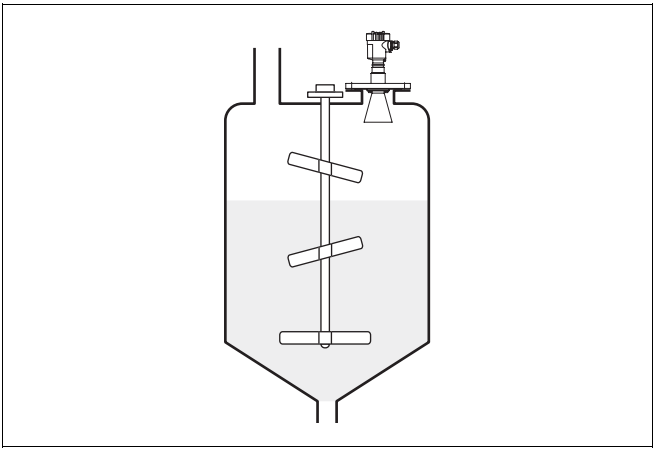

Fig. 11: Stirrers

Foam generation

By filling, stirrers and other processes in the vessel, dense foams can be generated on the product surface damping the emitted signal considerably.

If foams are causing measurement errors, the biggest possible radar antennas should be used.

VEGAFLEX sensors with guided microwave are unaffected by the foan generation and are particularly suitable for such applications.

Measurement in a standpipe (surge or bypass tube)

Pipe antennas or the use of a standpipe are preferred in vessels with installations and turbulence. Under these requirements, the measurement of products with low dielectric constants (from dielectric value 1.5) is possible.

Surge or bypass tubes must reach up to the requested min. level as a measurement is only possible in the tube.

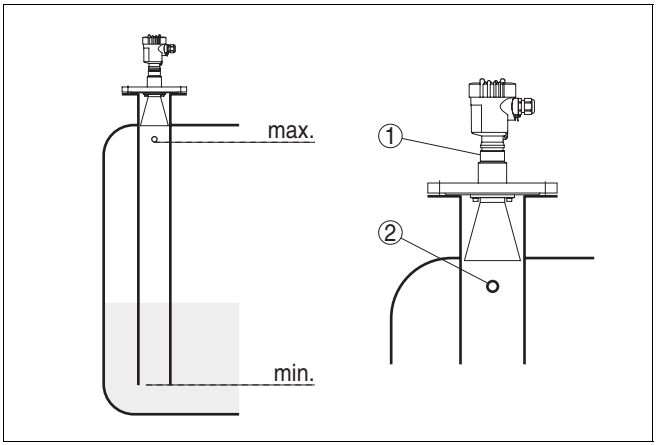

Fig. 12: Pipe antenna systems in a tank

1 Marking of the polarisation direction
2 Vent hole ø 5 … 10 mm

The antenna diameter of the sensor should correspond to the tube inside diameter. With VEGAPULS 66 approx. 50 mm depending on the antenna. The sensor can be used with tube diameters of 50 … 250 mm.

Also take note of the necessary upper vent hole in the

surge pipe which must be displaced by 90° to the polarisation marking on the sensor (see illustration: *Pipe antenna system in a tank*).

As an alternative to the surge pipe in the vessel, a pipe antenna system outside the vessel as bypass tube is also possible. Select the function *Bypass tube* during set-up.

Position the sensor in such a way that the polarisation marking on the process fitting is displaced by 90° to the holes or connection openings of the tube (see illustration:*Tube flange system as bypass tube*).

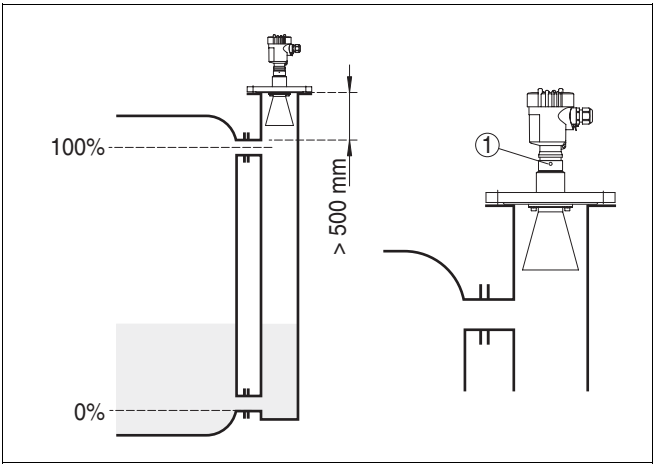

Fig. 13: Tube flange system as bypass tube

1 Marking of the polarisation direction

When mounting the sensor on a bypass tube, VEGAPULS 66 should be placed approx. 300 mm or more from the upper tube connection. If the inside of the tube is very rough, you should used a tube in the tube or a radar sensor with pipe antenna.

Adhesive products

The measurement in a standpipe is not recommended for very adhesive products.

Pressure

In case of gauge or low pressure in the vessel you should seal the process fitting on the thread. Check in advance, if

the seal material is resistant against the measured product. The max. permissible pressure is stated in the type label of the sensor.

5 Connecting to power supply

5.1 Preparing the connection

Note safety instructions

Always observe the following safety instructions:

- Connect only in the complete absence of line voltage
- If overvoltages are expected, overvoltage arresters should be installed.

Tip:
We recommend VEGA overvoltage arresters ÜS-F-LB-I and ÜSB 62-36G.X.

Take note of safety instructions for Ex applications

In hazardous areas you should take note of the appropriate regulations, conformity and type approval certificates of the sensors and power supply units.

Select voltage supply

Power supply and current signal are provided via the same two-wire connection cable. The power supply range can different depending on the instrument version. The exact range is stated in the Technical data in the Supplement.

Provide a reliable separation between the supply circuit acc. to DIN VDE 0106 part 101.

The VEGA power supply units VEGATRENN 149AEx, VEGASTAB 690, VEGADIS 371 as well as all VEGAMETs meet this requirement. When using one of these instruments, protection class III is ensured for VEGAPULS 66 .

Bear in mind the following factors regarding supply voltage:

- the reduction of output voltage of the power supply unit under nominal load (with a sensor current of 20.5 mA or 22 mA in case of fault signal)
- the influence of additional instruments in the circuit (see load values in Technical data)

Select connection cable

VEGAPULS 66 is connected with standard two-wire cable. An outer cable diameter of 5 … 9 mm ensures the seal effect of the cable entry. If electromagnetic interference is expected, we recommend the use of screened cable.

Cable screening and grounding

Connect the cable screen on both ends to ground potential. In the sensor, the screen must be connected directly to the inner ground terminal. The ground terminal on the outside of the housing must be connected to the potential equalisation.

If potential equalisation current are expected, the connection must be provided on the evaluation side via a ceramic capacitor (e.g. 1nF, 1500V). The low frequency potential equalisation current are now suppressed, however the protective effect for high frequency interference signals remains.

Select connection cable for Ex application

Take note of the corresponding installation regulations for Ex applications.

5.2 Connection procedure

Proceed as follows:

1 Unscrew the housing cover

2 Remove a probably existing indicating and adjustment module PLICSCOM by turning it lightly by the left

3 Loosen compression nut of the cable entry

4 Remove approx. 10 cm of the cable mantle, strip approx. 1 cm insulation from the ends of the individual wires

5 Insert the cable into the sensor through the cable entry

6 Lift the opening lug of the terminals with a screwdriver

7 Insert the wire ends into the open terminals according to the wiring plan

8 Press down the opening lug of the terminals, you will hear the terminal spring closing

9 Check the hold of the wires in the terminals by lightly pulling on them

10 Connect screen to the inner ground terminal and the outer ground terminal to the potential equalisation.

11 Tighten the compression nut of the cable entry, the seal ring must completely encircle the cable

12 Screw the housing cover back on

The electrical connection is finished.

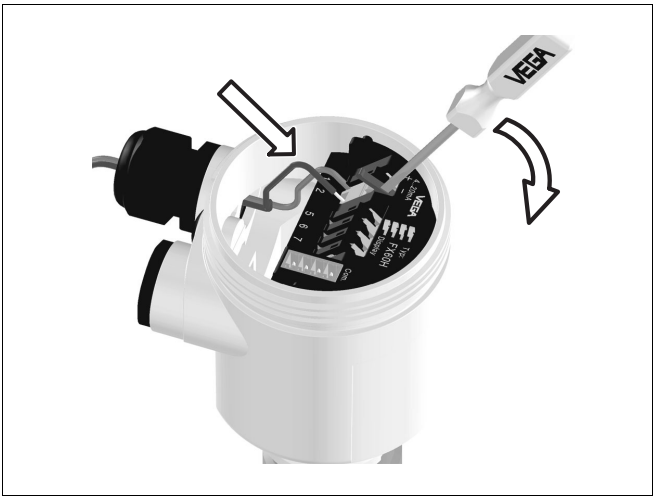

Fig. 14: Connection steps 6 and 7

5.3 Wiring plans, single chamber housing

Overview

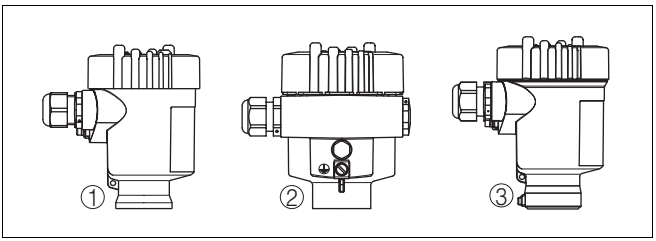

Fig. 15: Overview of the three material versions of the single chamber housing

1 Plastic

28438-EN-030701

2 *Aluminium*
3 *Stainless steel*

Top view, electronics and connection compartment

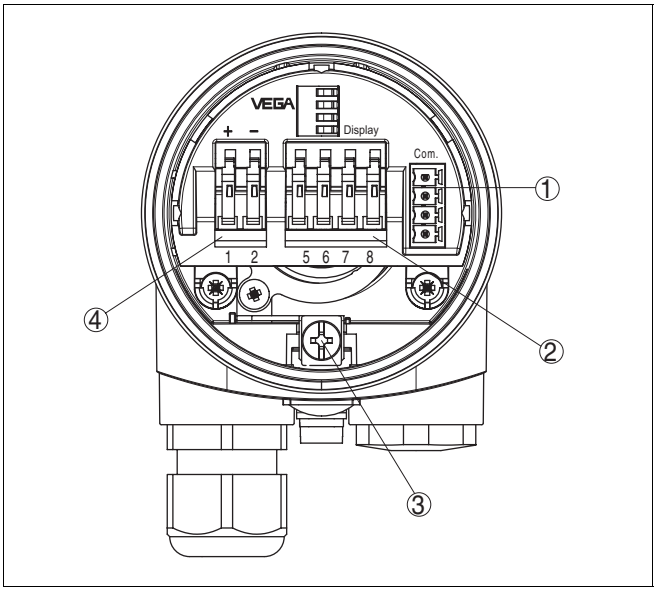

Fig. 16: Top view of the electronics and connection compartment

1 *Plug connector for VEGACONNECT (I²C interface)*
2 *Spring-loaded terminals for connection of the external indication VEGADIS 61*
3 *Ground terminal to connect cable screen*
4 *Spring-loaded terminals for power supply (4 ... 20 mA)*

Wiring plan

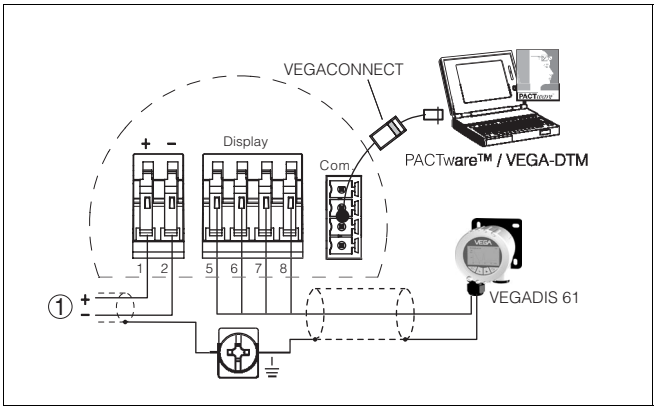

Fig. 17: Wiring plan, single chamber housing

28438-EN-030701

1 4 ... 20 mA connection/power supply

5.4 Wiring plans, double chamber housing

Overview

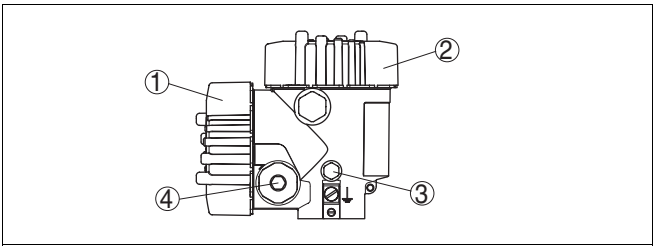

Fig. 18: Double chamber housing, non-Ex instrument or Exd instrument

1 Connection compartment
2 Electronics compartment
3 Breather element
4 Cable entry (pressure-tight with Exd)

Top view, electronics compartment

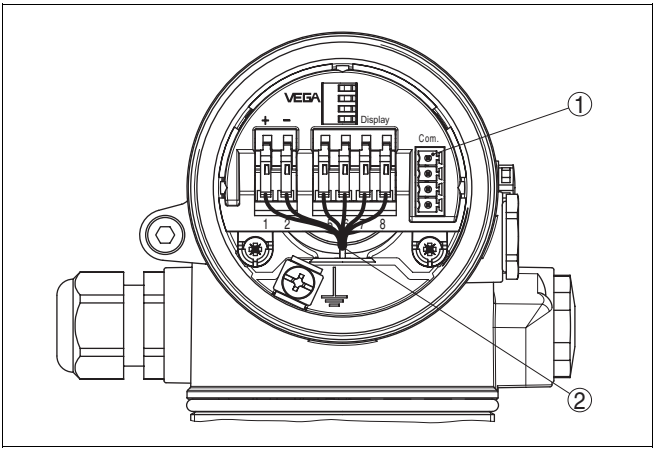

Fig. 19: Top view of the electronics compartment in double chamber housing

1 Plug connector for VEGACONNECT (I²C interface)
2 Internal connection cable to the connection compartment

28438-EN-030701

Top view, connection compartment (non-Ex)

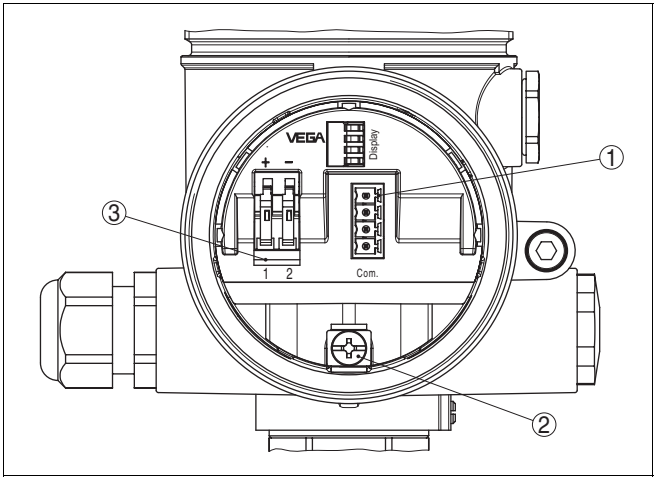

Fig. 20: Connection compartment, double chamber housing

1 *Plug connector for VEGACONNECT (I²C interface)*
2 *Ground terminal to connect cable screen*
3 *Spring-loaded terminals for power supply (4 ... 20 mA)*

Wiring plan (non-Ex)

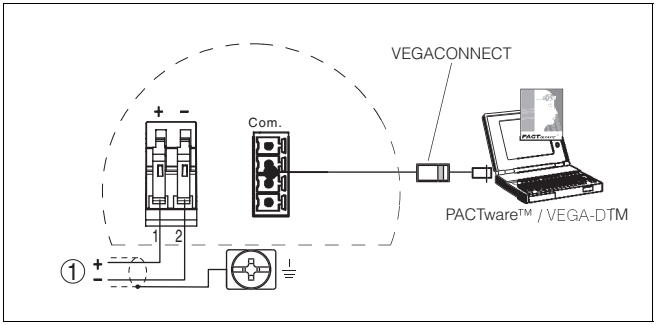

Fig. 21: Wiring plan, double chamber housing

1 *4 ... 20 mA connection/power supply*

Top view, connection compartment Exd

Information:
In Exd, the indicating and adjustment module PLICSCOM can only be used in the electronics compartment.

28438-EN-030701

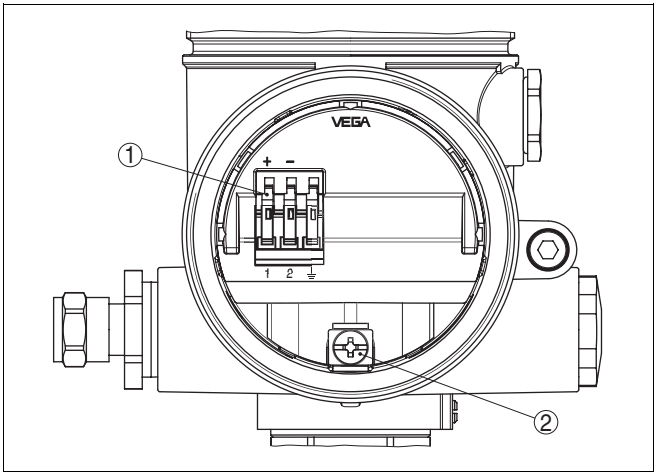

Fig. 22: Connection compartment, double chamber housing Exd

1 Spring-loaded terminals for power supply (4 ... 20 mA)
2 Ground terminal to connect cable screen

Wiring plan Exd

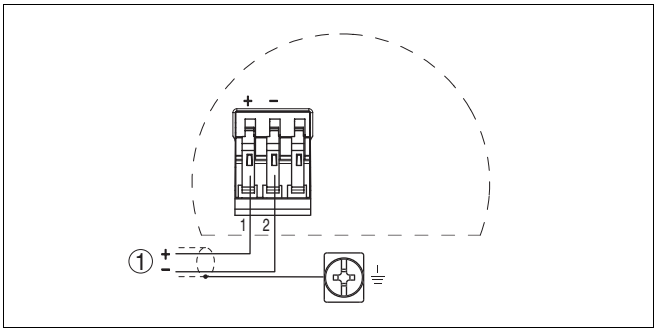

Fig. 23: Wiring plan, double chamber housing Exd

1 4 ... 20 mA connection/power supply

6 Set-up with the indicating and adjustment module PLICSCOM

6.1 Short description

Function/Configuration

The indicating and adjustment module PLICSCOM is used for measured value display, adjustment and diagnosis. It can be mounted in the following housing versions and instruments:

- all sensors of the plics® instrument family as well as in the single and double chamber housing (optionally in electronics or connection compartment)
- external indicating instrument VEGADIS 61

6.2 Installing the indicating and adjustment module PLICSCOM

Insert/remove PLICSCOM

PLICSCOM can be inserted or removed at any time. An interruption of the power supply is not necessary.

To install, proceed as follows:

1 Unscrew housing cover

2 Place PLICSCOM in the desired position on the electronics (you can choose any one of four different positions - each displaced by 90°)

3 Press PLICSCOM lightly onto the electronics and turn it to the right until it snaps in.

4 Screw housing cover with inspection window tightly back on.

Removal is carried out in reverse order.

PLICSCOM is powered by the sensor, an additional connection is not necessary.

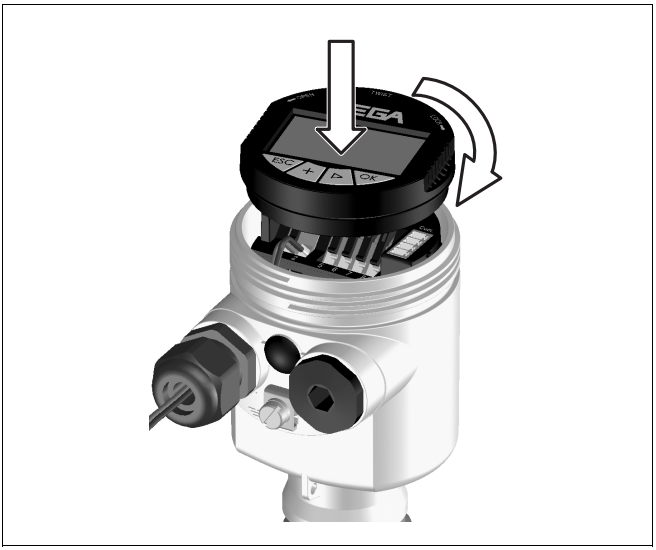

Fig. 24: Installation of PLICSCOM

Note:
If you want to retrofit a sensor with a PLICSCOM, an elevated cover with inspection window can be ordered from VEGA.

6.3 Adjustment system

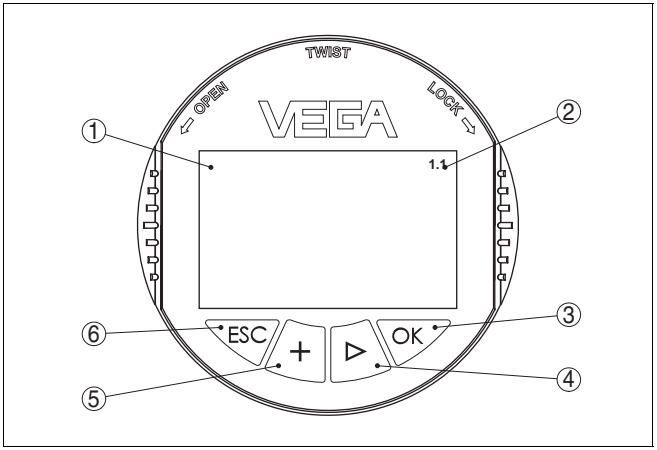

Fig. 25: Indicating and adjustment elements

1 ***LC display for indication of:***
- *measured value*
- *menu item*
- *parameter*

2 ***Indication of the menu item number***

3 ***OK key:***
- *move to the menu overview*
- *confirm selected menu*
- *edit parameter*
- *save value*

4 ***–> key to select:***
- *menu change*
- *list entry*
- *editing position*

5 ***+ key:***
- *modify value of a parameter*

6 ***ESC key:***
- *interrupt input*
- *jump to the next higher menu*

Adjustment system

The sensor is adjusted via the four keys of the indicating and adjustment module PLICSCOM. The LC display indicates the individual menu items. The functions are shown in the above illustration. Approx. 10 minutes after the last key is pressed, an automatic reset to measured value display is triggered. The values not confirmed with ***OK*** will get lost.

6.4 Set-up procedure

Switching on phase

After connection of VEGAPULS 66 to power supply, the instrument carries out a selfcheck for approx. one minute. The following steps are checked:

- internal check of the electronics
- indication of the instrument type, the firmware version as well as the sensor-TAG (sensor name)
- The output signal jumps briefly to the set interference current (HART sensor) or the status byte goes to failure (Profibus PA and FF sensors)

Then the actual measured value is displayed and the corresponding current (HART sensor) or the digital output signal is transmitted to the cable (Profibus PA and FF sensors). [1].

Parameter adjustment

As VEGAPULS 66 is a distance measuring instrument, the distance from the sensor to the product surface is detected. To have the real level displayed, an allocation of the measured distance to the percentage height must be carried out. To carry out this adjustment, the distance is entered with filled and emptied vessel. If these values are not known, it is possible to carry out the adjustment with distances of, e.g., 10% and 90%. Starting point for these distance values is always the seal surface of the thred or flange. With these settings the real level is calculated. Furthermore the operating range of the sensor is limited from maximum to the requested range.

The actual level is not important for this adjustment, the min./max. adjustment is always carried out without a level change. These settings can be already carried out without the instrument being installed.

In the main menu item Basic adjustment, the individual submenu items should be selected one after the other and provided with the correct parameters to ensure an optimum adjustment of the measurement.

[1] The volues correspond to the actual level as well as to the settings already carried out, e.g. default setting.

Note:
First of all the address setting you be carried out with Profibus PA, Foundation Fieldbus and HART multidrop. You will find a description in the operating instructions manual of PLICSCOM.

Start your parameter adjustment with the menu items of the basic adjustment.

Carrying out min. adjustment

Proceed as follows:

1 Move from the measured value display to the main menu by pushing ***[OK]***.

> Basic adjustment
Display
Diagnosis
Service
Info

2 Select the menu item *Basic adjustment* with ***[–>]*** and confirm with ***[OK]***. Now the menu item Min. adjustment is displayed.

Min. adjustment 1.1
0.00 %
=
10.000 m(d)
8.000 m(d)

3 With ***[OK]*** you prepare the percentage value for editing and set the cursor to the requested position with ***[–>]*** . Set the requested % value with ***[+]***and save with ***[OK]*** . The cursor jumps now to the distance value.

4 Enter the suitable distance value in m for the empty vessel (e.g. distance from the sensor to the vessel bottom)

5 Save the settings with ***[OK]*** and move to max. adjustment with ***[–>]***.

Carrying out max. adjustment

Proceed as follows:

Carrying out max. adjustment

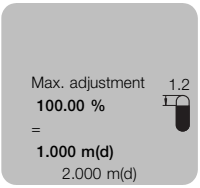

1 Prepare the percentage value for editing with ***[OK]*** and set the cursor to the requested position with ***[–>]*** . Set the requested % value with ***[+]*** and save with ***[OK]*** . The cursor jumps now to the distance value.

2 Enter the suitable distance value in m for the full vessel. Make sure that the max. level is below the radar antenna.

3 Save the settings with ***[OK]*** and move to medium selection with ***[–>]*** .

Medium selection

Each medium has different reflection characteristics. In liquids, fluctuating product surfaces and foam generation are additional interfering factors. In solids, these are dust generation, material cone and additional echoes caused by the vessel wall. To adapt the sensor to the different measurement conditions, you first should select in this menu item *Liquid* or *Solid* .

Depending on the conductivity and the dielectric constant, liquids have different reflection characteristics. Therefore you have different selection options under the menu item Liquid such as *Solvents*, *Chemical mixtures* and *Water based*.

Under Solids you can select in addition *Powder/dust*, *Granular/pellets* or *Ballast/pebbles* .

Through this additional selection, the sensor is adapted perfectly to the product and the reliability, particularly with bad reflection properties is considerable increased.

Enter the requested parameters via the corresponding keys, save your settings and jump to the next menu item with the***[–>]*** key.

Vessel form

Apart from the medium, also the vessel form can impair the measurement. To adapt the sensor to these measurement conditions, this menu item offers you different selection options depending on the selection Liquid or Solid. With *Liquid* these are *Storage tank*, *Stilling tube*, *Bypass tube*, *Stirrer vessel* or *Reaction vessel*, with *Solid Silo* or *Bunker*.

With standpipe or bypass tubes the radar impulses are transmitted by reflection inside the tube. This causes a shift of the running time independent of the inner diameter. This influence is compensated by adjusting the inner diameter.

Enter the requested parameters via the corresponding keys, save your settings and jump to the next menu item with the ***[–>]*** key.

Damping

To suppress fluctuation in the measured value display, e.g. caused by fluctuating product surfaces, an integration time can be adjustment. This time can be between 0 and 999 seconds. Make sure that also the reaction time of the complere measurement will be longer and the sensor reacts with a delay to quick measured value changes. In general, a time of a few seconds is sufficient to smooth the measured value display.

Enter the requested parameters via the corresponding keys, save your settings and jump to the next menu item with the ***[–>]*** key.

Linearisation curve

A linearisation is necessary for all vessels in which the vessel volume does not rise linear to the level, e.g. in cylindrical tank or spherical tank. Corresponding linearisation curves are preset for these vessels. They represent the ratio between percentag level and vessel volume. By activating the suitable curve, the percentage vessel volume is displayed correctly. If the volume should not be displayed in percent, but e.g. in l or kg, it is possible to set a scaling in the menu item Display.

Enter the requested parameter via the corresponding keys, save your settings and jump to the next menu item with the ***[–>]*** keys.

Sensor-TAG

In this menu item you can enter a clear designation for the sensor, e.g. the measurement loop name or the tank or product designation. In digital systems and the documentation of larger plants, a designation should be entered once for exact identification of individual measurement loops.

With this menu item the basic adjustment is finished and you can now return to the main menu with the ***[ESC]*** key.

False echo memory

High sockets or vessel installation such as e.g. struts or stirrers as well as buildup or weld joints on the vessel wall can cause false reflections which can impair the measurement. A false echo memory detects and marks these false echoes so that they are no longer taken into account for the level measurement. To create a false echo memory the vessel should be empty so that all probably existing false reflections can be detected.

Proceed as follows:

1 Move from the measured value display to the main menu by pushing ***[OK]***.

2 Select the menu item *Service* with ***[–>]*** and confirm with ***[OK]*** . Now the menu item False echo memory is displayed.

3 Confirm*False echo memory - change* with ***[OK]*** and select in the lower menu *Create new* . The real distance from the sensor to the product surface is entered. All false echoes in this range are detected by the sensor and saved after having confirmed with ***[OK]*** .

Note:
Check the distance to the product surface as the actual level will be saved as false echo in case of a wrong (too large) setting. Due to this, the level can no longer be detected in this range.

28438-EN-030701

Additional adjustment options

Additional adjustment and diagnosis possibilities such as e.g. scaling, simulation or echo curve presentation are shown in the following menu schematic. You will find a detailed description of these menu items in the operating instructions manual of the indicating and adjustment module PLICSCOM.

6.5 Menu schematic

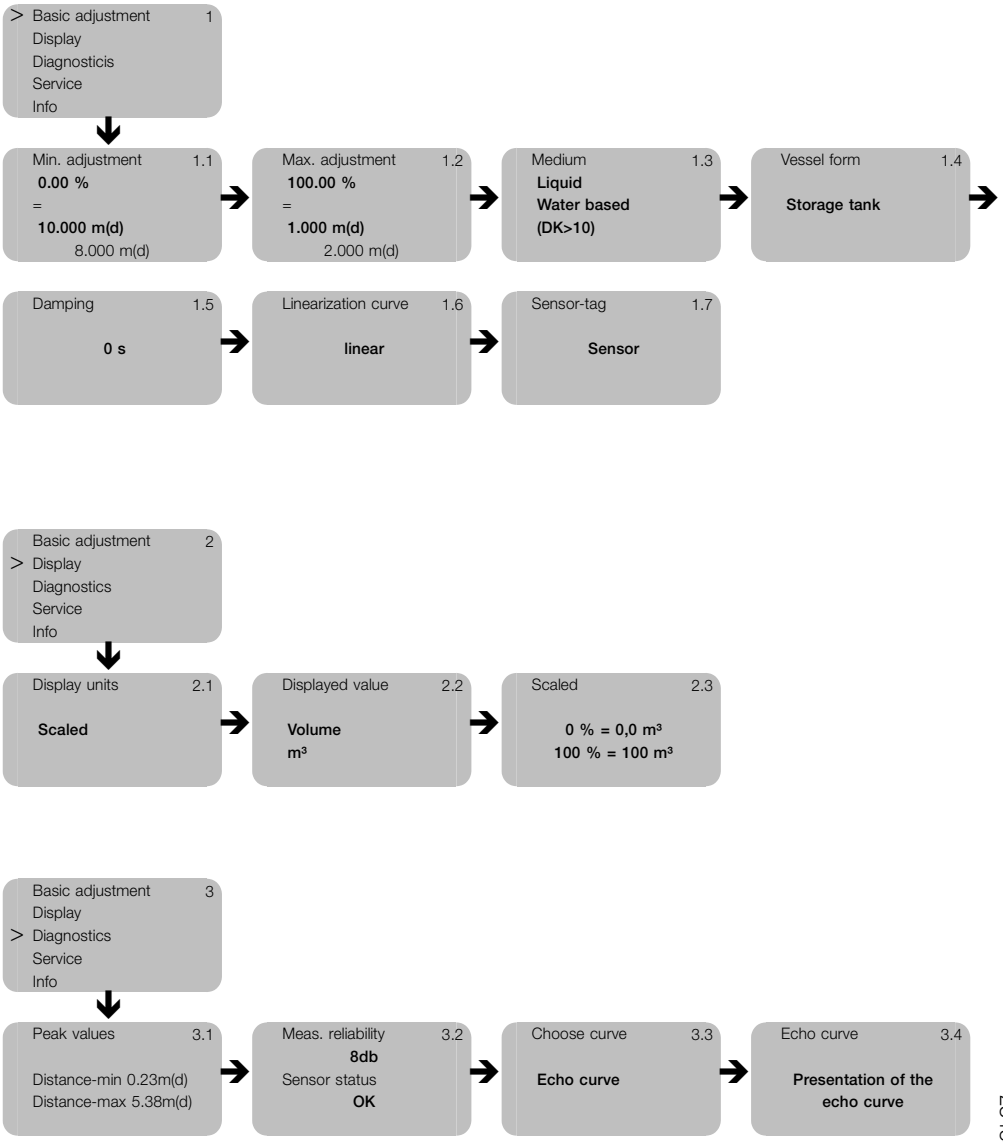

28438-EN-030701

Basic adjustment 4
Display
Diagostics
> Service
Info

↓

False echo memory 4.1
change?

→ Addl. adjustments 4.2
non

→ Current output 4.3
Output mode 4-20 mA
Failure mode <3,6 mA
Min. current 3,8 mA

→ Simulation 4.4
Start simulation?

→ Reset 4.5
Select Reset?

→ Select 4.6
m(d) units of measurement?

→ Language 4.7
English

→ HART operation mode 4.8
Standard Address 0

→ Copy sensor data 4.9
Copy sensor data?

→ PIN 4.10
Enable?

Basic adjustment 5
Display
Diagnostics
Service
> Info

↓

Sensor type 5.1
VEGAPULS 6x
Serial number
12345678

→ Date of manufacture 5.2
29. April 2003
Software version
2.01.00

→ Date of last change 5.3
using PC
15. May 2003

→ Sensor details 5.4
Display now

7 Set-up with PACTware™

7.1 Connecting the PC

Connecting the PC directly to the sensor

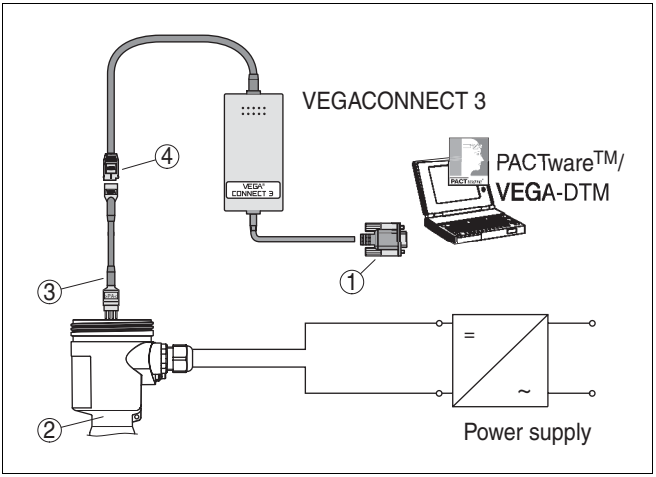

Fig. 26: PC connected directly to the sensor

1 RS232 connection
2 VEGAPULS 66
3 I²C adapter cable for VEGACONNECT 3
4 I²C bus plug

Necessary components:

- VEGAPULS 66
- PC with PACTware™ and suitable VEGA-DTM
- VEGACONNECT 3 with I²C adapter cable (article no. 2.27323)
- power supply unit

28438-EN-030701

Connecting the PC to the signal cable

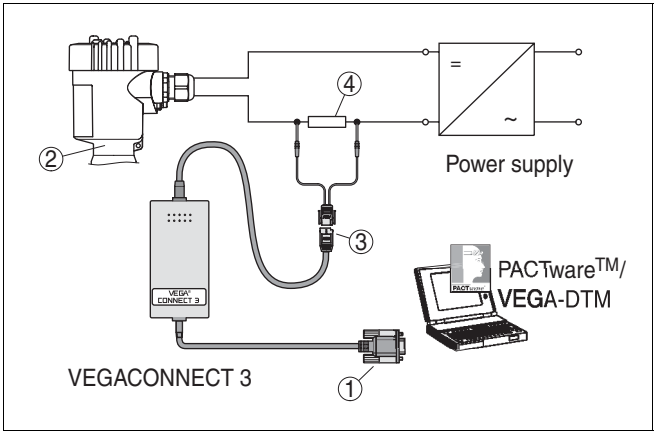

Fig. 27: PC connected to the signal cable

1 RS232 connection
2 VEGAPULS 66
3 VEGACONNECT 3 adapter cable for HART®
4 HART® resistance 250 Ohm

Necessary components:

- VEGAPULS 66
- PC with PACTware™ and suitable VEGA-DTM
- VEGACONNECT 3 with adapter cable for HART®
- HART® resistance 250 Ohm
- power supply unit

Note:
For power supply units with integrated HART® resistance there is no longer an additional external resistance necessary. In this case, VEGACONNECT 3 can be connected in parallel to the power supply.

Tip:
Further set-up steps are described in the operating instructions manual *DTM Collection/PACTware* attached to each CD and which can be downloaded from our homepage. A detailed description is available in the online help of PACTware™ and the VEGA-DTMs.

8 Maintenance and fault rectification

8.1 Maintenance

In normal operation, the VEGAPULS 66 is completely maintenance-free.

8.2 Fault rectification

Checking the 4 ... 20 mA signal

Connect a hand-multimeter with a suitable measuring range acc. to the wiring plan.

? 4 ... 20 mA signal not stable

- level fluctuations

→ set integration time via PLICSCOM or PACTware™

? 4 ... 20 mA signal missing

- incorrect connection to power supply

→ check connection acc. to chapter "Connection procedure" and correct if necessary acc. to chapter "Wiring plans"

- no power supply

→ check cables for line break, repair if necessary

- power supply too low or load resistance too high

→ check and adapt if necessary

? Current signal more than 22 mA or 0 mA

- electronics module defective

→ exchange instrument or return for repair

In Ex applications, the regulations for the wiring of intrinsically safe circuits must be observed.

28438-EN-030701

Fault messages via PLICSCOM

? E013

- no measured value available

→ sensor in boot phase

→ sensor does not find an echo, e.g. by wrong installation or wrong parameter adjustment

? E017

- Adjustment spann too small

→ carry out a new adjustment and increase the distance between min. and max. adjustment

? E036

- No operable sensor software

→ carry out a software update or return instrument for repair

? E042/E043

- Hardware error, electronics defective

→ exchange instrument or return for repair

8.3 Repairing the instrument

If it is necessary to repairVEGAPULS 66, please send the instrument to the following address:

VEGA Grieshaber KG; Repair department; Am Hohenstein 113; 77761 Schiltach/Germany

9 Dismounting

9.1 Dismounting procedure

Take note of chapters "Mounting" and "Connecting to power supply" and carry out the listed steps in reverse order.

9.2 Disposal

VEGAPULS 66 consists of materials which can be recycled by specialised recycling companies. We have purposely designed the electronic modules to be easily separable. Mark the instrument as scrap and dispose of it according to government regulations (electronic scrap ordinance, etc.).

Materials: see Technical data

If you cannot dispose of the instrument properly, please contact us about disposal methods or return.

10 Supplement

10.1 Technical data

General data

Materials, wetted parts	
– process fitting	flanges DN 50 … DN 250, 2" … 10": stainless steel 1.4435; Alloy C22 2.4602
– antenna, standpipe	stainless steel 1.4435, PTFE (TFM 1600), ceramic (99,9 % Al2O3)
– seal antenna system	Viton, Kalrez Spectrum 6375, graphite
– standpipe	stainless steel 1.4435
Materials, non-wetted parts	
– housing	plastic PBT (Polyester), Alu-die casting powder-coated, stainless steel 1.4435
– seal ring between housing and housing cover	NBR (stainless steel housing), silicone (alu/plastic housing)
– inspection window in the housing cover[2)]	Lexan
– ground terminal	stainless steel 1.4571/1.4435
Weight	2.0 ... 3.1 kg (depending on process fitting and housing)

[2)] Version with PLICSCOM.

28438-EN-030701

Output variable

Output signal	4 … 20 mA/HART®
Resolution	1.6 µA
Fault signal	current output unchanged, 20.5 mA, 22 mA, < 3.6 mA (adjustable)
Current limitation	22 mA
Integration time [3]	0 … 999 s, adjustable
Rise time	150 ms (ti : 0 s, 0 … 100 %)
Fulfilled Namur recommendation	NE 43

Input variable

Parameter	distance between process fitting and product surface
Min. distance from the antenna edge	100 mm
Measuring range	30 m

Accuracy [4]

Reference conditions acc. to IEC 60770-1	
– temperature	18 ... 30°C
– relative humidity	45 ... 75 %
– pressure	860 ... 1060 mbar (86 ... 106 kPa)
Determination of characteristics	limit point adjustment acc. to DIN 16086
Characteristics	linear

[3] The interval required by the output signal to reach 63 % of the actual height after a jump of the input variable. After the triple integration time has passed, the output signal has reached 95 % of the jump height.

[4] Similar to DINV 19259-1 and IEC 60770-1

Deviation in characteristics and characteristics [5]

Average temperature coefficient of the zero signal (temperature error)	0.06 %/10 K
Resolution, general	max. 1 mm
Frequency	C-band (6 GHz technology)
Interval	approx. 1 s
Beam angle, depending on the antenna system at -3 dB	
– without horn antenna	38°
– ø 96 mm	30°
– ø 145 mm	20°
– ø 195 mm	16°
– ø 240 mm	14°
Adjustment time [6]	> 1 s (depending on the parameter adjustment)
Pulse peak power	< 1 mW (<25 mW EIRP) [7]
Average power	250 µW
Received average emittd power[8]	
– distance 1 m	0.4 … 3.2 nW per cm^2 (0.4 … 3.2 x 10^{-9}W/cm^2)
– distance 5 m	0.02 … 0.13 nW per cm^2
Accuracy	see diagram

[5] Relating to the nominal range, incl. hysteresis and repeatability, determined acc. to the limit point method

[6] The adjustment time (also actuating time, response time or adjustment period) is the time the sensor requires to output the correct level (with max. 10 % deviation) after a sudden level change.

[7] EIRP: emitted power relating to an isotropic radiator

[8] Average emitted power reaching an object (electromagnetic energy) per cm^2 directly in front of the antenna. The received emitted power depends on the antenna version and the distance.

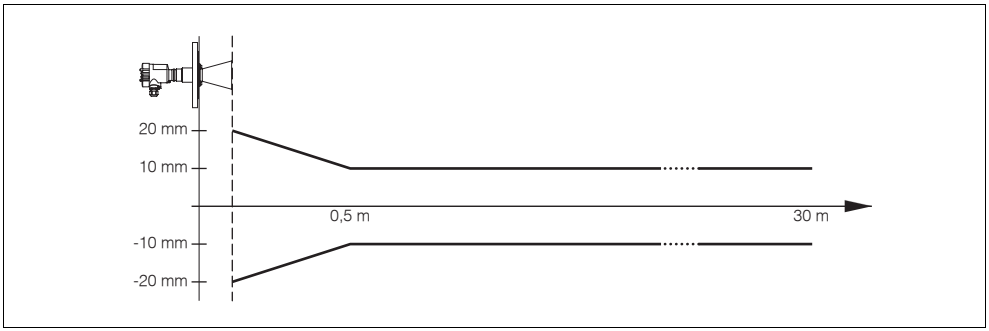

Fig. 28: Accuracy VEGAPULS 66

Ambient conditions

Ambient, storage and transport temperature	
– without PLICSCOM	-40 ... +80°C
– with PLICSCOM	-40 ... +70°C

Process conditions [9]

Vessel pressure	
– Coupling cone PTFE	-100 … +4000 kPa (-1 … 40 bar)
– Coupling cone ceramic	-100 … +6400 kPa (-1 … 64 bar)
Process temperature (measured on the flange)	
– Coupling cone PTFE/seal Viton	-40 ... +130°C
– Coupling cone PTFE/seal Kalrez Spectrum	-15 ... +130°C
– Coupling cone ceramic/seal graphite	-60 ... +250°C (+400°C with temperature adapter)
Vibrations resistance	mechanical vibrations with 4g and 5 … 100 Hz [10]

[9] Note pressure/Temperature diagram
[10] Tested acc. to the regulations of the German Lloyd, GL-directive 2

28438-EN-030701

Electromechanical data

Cable entry/plug [11]	
– Single chamber housing	• 1 x cable entry M20x1.5 (cable-ø 5 … 9 mm), 1 x blind stopper M20x1.5 or: • 1x closing cap ½ NPT, 1x blind stopper ½ NPT or: • 1x plug M12x1, 1 x blind stopper M20x1.5
– Double chamber housing	• 1 x cable entry M20x1.5 (cable-ø 5 … 9 mm), 1 x blind stopper M20x1.5 or: • 1x closing cap ½ NPT, 1x blind stopper ½ NPT or: • 1x plug M12x1, 1 x blind stopper M20x1.5
– Spring-loaded terminals	for wire-cross sections up to 2.5 mm^2

Indicating and adjustment module PLICSCOM

Power supply and data transmission	through VEGAPULS via gold-coated slidng contacts (I^2C bus)
Display	LC display in full dot matrix
Adjustment elements	4 keys
Protection	IP 20 (mounted into VEGAPULS: IP 40)
Materials	
– housing	ABS
– inspection window	Polyester foil

[11] Depending on the version

28438-EN-030701

Power supply

Power supply	
– non-Ex instrument	14 ... 36 V DC
– EEx ia instrument	14 ... 30 V DC
– Exd instrument	20 ... 36 V DC
Permissible residual ripple	
– < 100 Hz	Uss < 1 V
– 100 Hz … 10 kHz	Uss < 10 mV
Load	see diagram

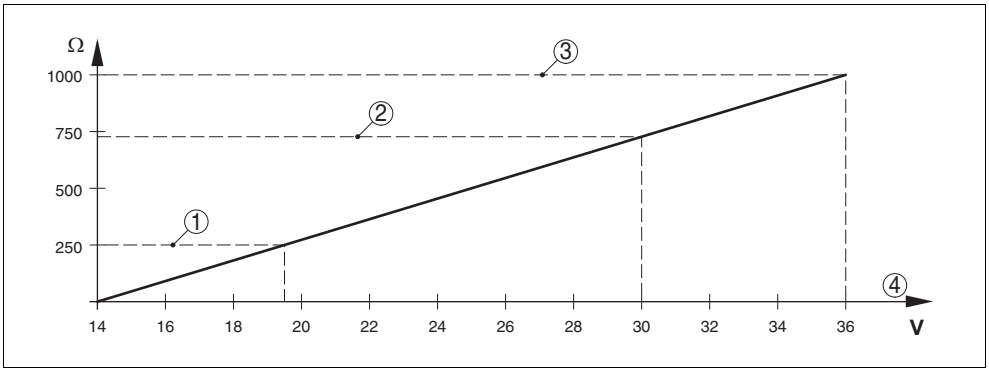

Fig. 29: Voltage diagram
1 HART® load
2 Voltage limit EEx ia instrument
3 Voltage limit non-Ex instrument/Exd instrument
4 Supply voltage

Electrical protective measures

Protection	IP 66/IP 67
Overvoltage category	III
Protection class	II

28438-EN-030701

Approvals [12)]

ATEX II 1G, 1/2G, 2G EEx ia IIC T6,
ATEX II 1/2G, 2G EEx d ia IIC T6, WHG,
ship approvals

10.2 Dimensions

Housing

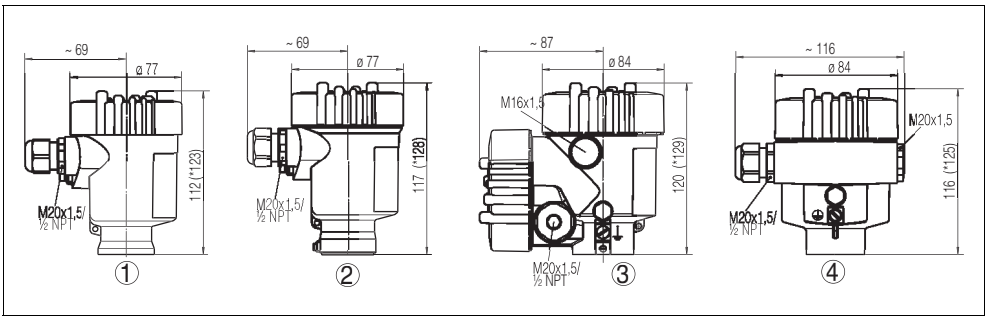

Fig. 30:
1 Plastic housing (dimension with integrated PLICSCOM)*
2 Stainless steel housing (dimension with integrated PLICSCOM)*
3 Aluminium double chamber housing (dimension with integrated PLICSCOM)*
4 Aluminium housing (dimension with integrated PLICSCOM)*

[12)] Deviating data with Ex applications: see separate safety instructions

VEGAPULS 66

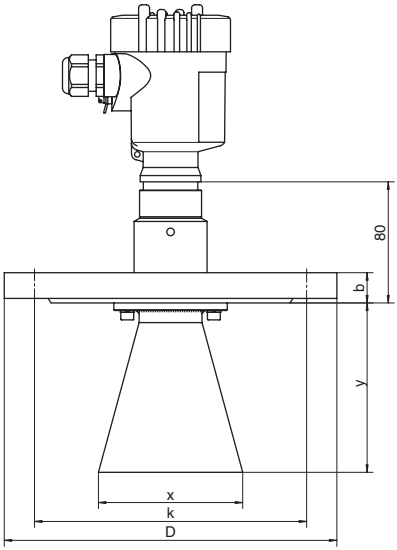

	D	b	k	d	x	y
DN 50 PN 40	165	20	125	4xø18	102	8
DN 80 PN 40	200	24	160	8xø18	138	14
DN 100 PN 16	220	20	180	8xø18	158	14
DN 150 PN 16	285	22	240	8xø22	212	14
2" 150 lb	152,4	19,1	120,7	4xø19,1	91,9	8
3" 150 lb	190,5	23,9	152,4	4xø19,1	127	14
4" 150 lb	228,6	23,9	190,5	8xø19,1	157,2	14
6" 150 lb	279,4	25,4	241,3	8xø22,4	215,9	14

Fig. 31: VEGAPULS 66in standard version

28438-EN-030701

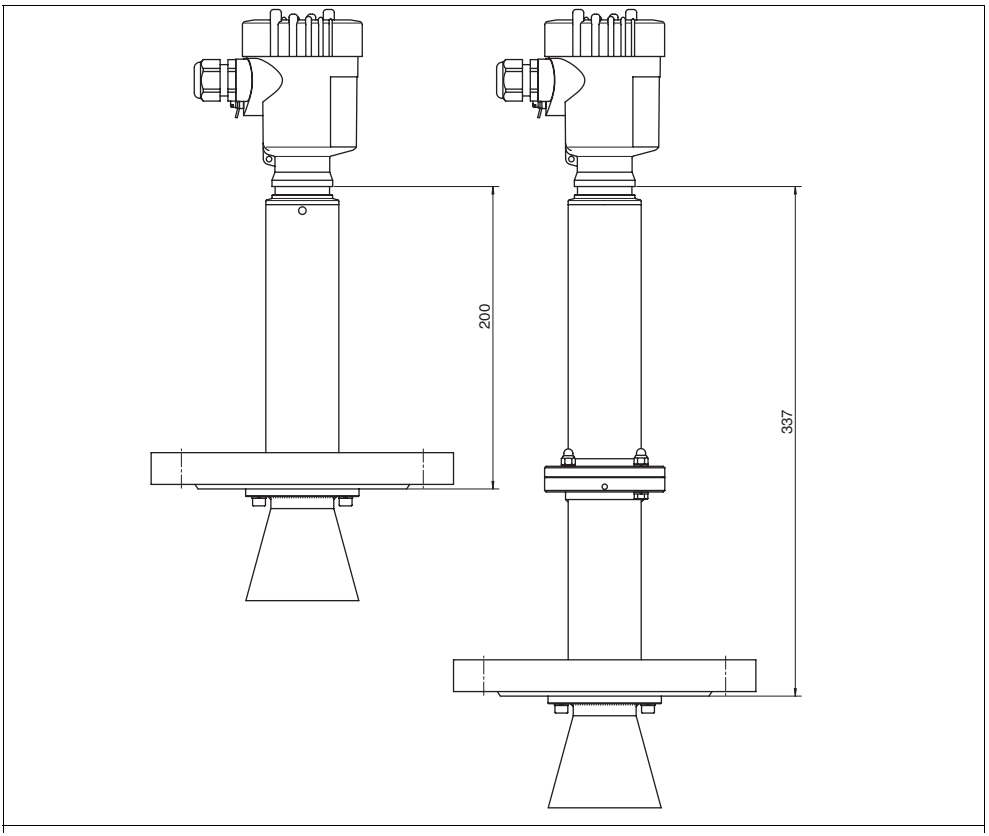

Fig. 32: VEGAPULS 66for process temperatures up to 250°C or 400°C

VEGA Grieshaber KG
Am Hohenstein 113
77761 Schiltach
Germany
Phone +49 7836 50-0
Fax +49 7836 50-201
E-mail: info@de.vega.com
www.vega.com

All statements concerning scope of delivery, application, practical use and operating conditions of the sensors and processing systems correspond to the information available at the time of printing.