GLOBAL SUN COMMUNICATIONS INC.
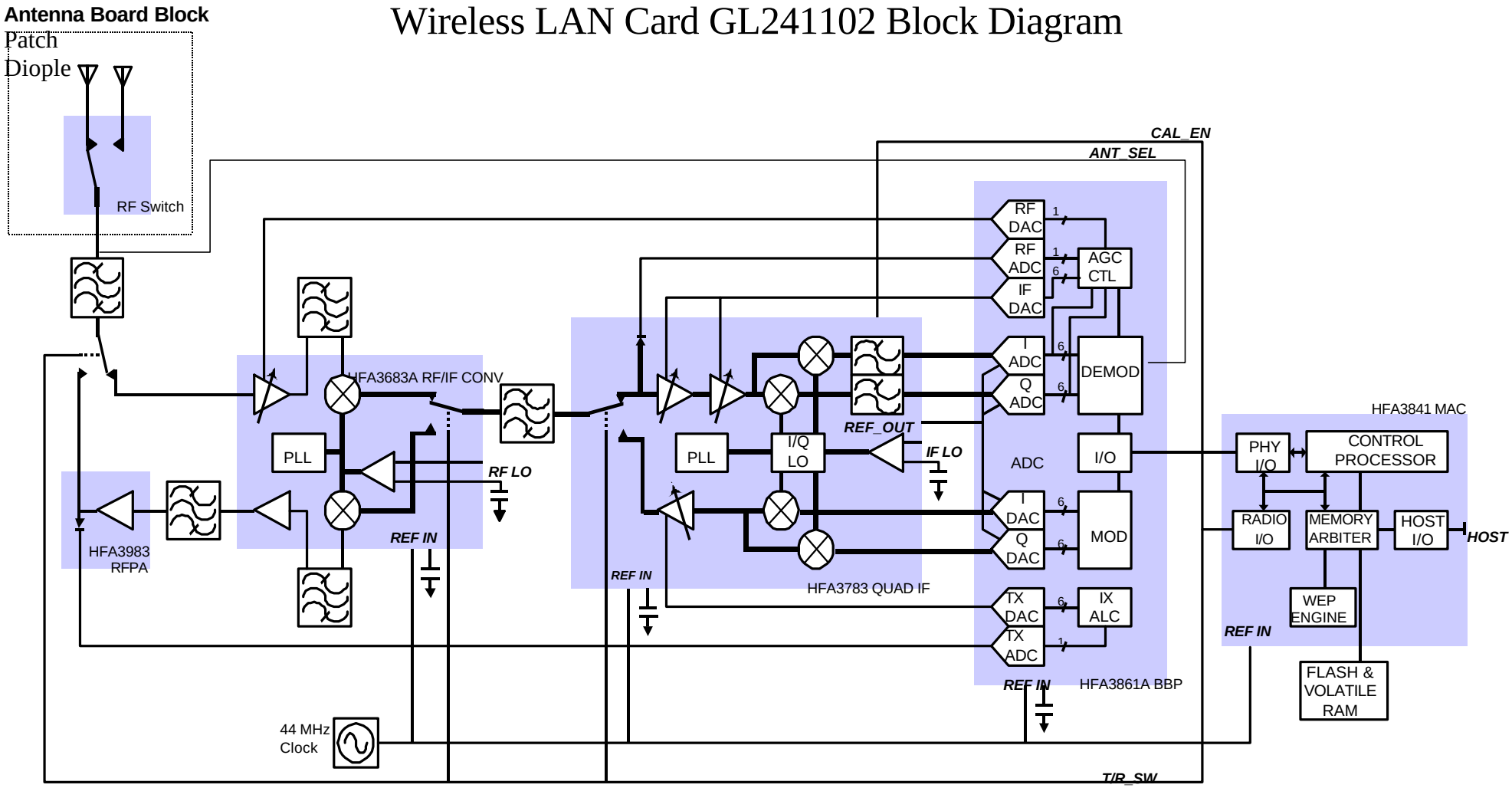
Wireless LAN Card GL241102 Block Diagram