TEST REPORT

Product Name : Tablet
Model Number : xTablet T1190
FCC ID : O86T1190

Prepared for : MobileDemand, L.C.
Address : 1501 Boyson Sq Dr, Ste 101 Hiawatha, Iowa, 52233, United States

Prepared by : EMTEK (SHENZHEN) CO., LTD.
Address : Building 69, Majialong Industry Zone, Nanshan District, Shenzhen, Guangdong, China

Tel: (0755) 26954280
Fax: (0755) 26954282

Report Number : ES201225029W07
Date of Test : December 25, 2020 to March 24, 2021
Date of Report : March 24, 2021

Table of Contents

1 TEST RESULT CERTIFICATION 3
2 EUT TECHNICAL DESCRIPTION 4
3 SUMMARY OF TEST RESULT 7
3.1 TEST ITEM 7
3.2 OUTLINE OF EUT 7
4 TEST METHODOLOGY 8
4.1 GENERAL DESCRIPTION OF APPLIED STANDARDS 8
4.2 MEASUREMENT EQUIPMENT USED 8
4.3 DESCRIPTION OF TEST MODES 9
5 FACILITIES AND ACCREDITATIONS 17
5.1 FACILITIES 17
5.2 LABORATORY ACCREDITATIONS AND LISTINGS 17
6 TEST SYSTEM UNCERTAINTY 18
7 SETUP OF EQUIPMENT UNDER TEST 19
7.1 RADIO FREQUENCY TEST SETUP 1 19
7.2 RADIO FREQUENCY TEST SETUP 2 19
7.3 RADIO FREQUENCY TEST SETUP 3 19
7.4 SUPPORT EQUIPMENT 21
8 TEST REQUIREMENTS 22
8.1 RF POWER OUTPUT 22
8.2 EFFECTIVE (ISOTROPIC) RADIATED POWER 28
8.3 MODULATION CHARACTERISTICS 56
8.4 OCCUPIED BANDWIDTH 57
8.5 BAND EDGE EMISSION 77
8.6 OUT OF BAND EMISSIONS AT ANTENNA TERMINALS 112
8.7 FIELD STRENGTH OF SPURIOUS RADIATION 123
8.8 FREQUENCY STABILITY 142
8.9 PEAK TO AVERAGE RATIO 143

1 TEST RESULT CERTIFICATION

Applicant	:	MobileDemand, L.C.
Address :		1501 Boyson Sq Dr, Ste 101 Hiawatha, Iowa, 52233, United States
Manufacturer	:	MobileDemand, L.C.
Address :		No.88 East Qianjin Road, Kunshan city, Jiangsu province, China
EUT	:	Tablet
Model Name	:	xTablet T1190
Trademark	:	MobileDemand

Measurement Procedure Used:

APPLICABLE STANDARDS	
STANDARD	**TEST RESULT**
FCC 47 CFR Part 2, Subpart J FCC 47 CFR Part 22, Subpart H FCC 47 CFR Part 24, Subpart E FCC 47 CFR Part 27 FCC 47 CFR Part 90	**PASS**

The above equipment was tested by EMTEK (SHENZHEN) CO., LTD. The test data, data evaluation, test procedures, and equipment configurations shown in this report were made in accordance with the procedures given in ANSI C63.25 (2015) and the energy emitted by the sample EUT tested as described in this report is in compliance with the requirements of FCC Rules Part 2, 22(H), 24(E), 27.

The test results of this report relate only to the tested sample identified in this report

Date of Test : December 25, 2020 to March 24, 2021

Prepared by : Qiang Wang/Editor

Reviewer : Joe Xia/Supervisor

Approve & Authorized Signer : Lisa Wang/Manager

EMTEK (SHENZHEN) CO., LTD. TESTING

2 EUT TECHNICAL DESCRIPTION

Characteristics	Description	
Device Type	Potable Equipment For LTE	
Product	Tablet	
Model Number	xTablet T1190	
Sample	2#	
Operation Band	LTE BAND2, LTE BAND4, LTE BAND5, LTE BAND7, LTE BAND12, LTE BAND13, LTE BAND26, LTE BAND41, LTE BAND66	
Modulation	QPSK, 16QAM, 64QAM	
Operating Frequency Range(s)	FDD: TX 1850 to 1910MHz /RX 1930 to 1990MHz for LTE BAND2 TX 1710 to 1755MHz /RX 2110 to 2155MHz for LTE BAND4 TX 824 to 849MHz /RX 869 to 894MHz for LTE BAND5 TX 2500 to 2570MHz /RX 2620 to 2690MHz for LTE BAND7 TX 699 to 716MHz /RX 729 to 746MHz for LTE BAND12 TX 777 to 787MHz /RX 746 to 756MHz for LTE BAND13 TX 814 to 849MHz /RX 859 to 894MHz for LTE BAND26 TX 1710 to 1780MHz /RX 2110 to 2180MHz for LTE BAND66 TDD: TX/RX 2496 to 2690MHz for LTE BAND41	
Supported Channel Bandwidth	LTE BAND2	☒1.4MHz, ☒3MHz, ☒5MHz, ☒10MHz, ☒15MHz, ☒20MHz
	LTE BAND4	☒1.4MHz, ☒3MHz, ☒5MHz, ☒10MHz, ☒15MHz, ☒20MHz
	LTE BAND5	☒1.4MHz, ☒3MHz, ☒5MHz, ☒10MHz
	LTE BAND7	☒5MHz, ☒10MHz, ☒15MHz, ☒20MHz
	LTE BAND12	☒1.4MHz, ☒3MHz, ☒5MHz, ☒10MHz
	LTE BAND13	☒5MHz, ☒10MHz
	LTE BAND26	☒1.4MHz, ☒3MHz, ☒5MHz, ☒10MHz, ☒15MHz
	LTE BAND66	☒1.4MHz, ☒3MHz, ☒5MHz, ☒10MHz, ☒15MHz, ☒20MHz
	LTE BAND41	☒5MHz, ☒10MHz, ☒15MHz, ☒20MHz
	LTE BAND7-CA	☒ 10MHz+20MHz, ☒ 10MHz+15MHz, ☒ 15MHz+15MHz, ☒15MHz+20MHz, ☒20MHz+20MHz
	LTE BAND41_CA	☒5MHz+20MHz, ☒10MHz+15MHz, ☒10MHz+20MHz, ☒15MHz+15MHz, ☒15MHz+20MHz, ☒20MHz+20MHz
TX and RX Antenna	Ant1 (Main Antenna)-Support Transmit and Receive Ant2 (Slave Antenna)-Only Support Receive Remark: Ant2 cannot work independently, it only assists receiving function with the main antenna	

Antenna Type	FPC antenna
Antenna Gain	2.6dBi for LTE BAND2 2.8dBi for LTE BAND4 0.1dBi for LTE BAND5 2.3dBi for LTE BAND7 0.5dBi for LTE BAND12 0.0dBi for LTE BAND13 0.2dBi for LTE BAND26 2.8dBi for LTE BAND66 2.3dBi for LTE BAND41
Power supply	☒DC 7.6V internal rechargeable li-ion polymer battery ☒DC 19V from Adapter
	☒Adapter: Model: ADP-65JH HB INPUT: 100-240V~1.5A 50-60Hz OUTPUT: DC 19V, 3.42A
Battery information	Model: IP575399-2S Rating: DC 7.6V, 4800mAh, 36.5Wh
Date of Received	December 25, 2020
Temperature Range	-20°C ~ +60°C

Note: *for more details, please refer to the User's manual of the EUT.*

Feature of Equipment under Test

Name	WO#	MSI P/N	Description	LTE Module
EUT1	20PN086247E	9S7-ND6211-01S	N4120, LPDDR4 4G, eMMC 128GB	EM-7565
EUT2	20PN086244E	9S7-ND6211-02S	N5030, LPDDR4 8G, eMMC 128GB	EM-7565

Note: The product listed above, is evaluated by test on representative samples which cover the matrix of configurations. No change or modification is made on the product hardware during the test to achieve compliance. It's confirmed to be in compliance with the requirements of the following standards. We choose EUT1/2 or EMI pretest; the worst case mode is EUT2 situation that present for this report

3 SUMMARY OF TEST RESULT

3.1 TEST ITEM

FCC Rule	Test Parameter	Verdict	Remark
2.1046	RF Power Output	PASS	
22.913, 24.232, 27.50, 90.635	Equivalent (Isotropic) Radiated Power	PASS	
2.1047	Modulation Characteristics	PASS	
2.1049	Occupied Bandwidth	PASS	
2.1051, 22.917, 24.238, 27.53, 90.691	Out of Band Emissions at Antenna Terminals	PASS	
	Band Edge Emission	PASS	
2.1053, 22.917, 24.238, 27.53, 90.691	Field Strength of Spurious Radiation	PASS	
2.1055, 22.355, 24.235, 27.54, 90.213	Frequency Stability versus Temperature	PASS	
	Frequency Stability versus Voltage	PASS	
24.232, 27.50	Peak to Average Ratio	PASS	

RELATED SUBMITTAL(S) / GRANT(S):

This submittal(s) (test report) is intended for FCC ID: O86T1190 filing to comply with FCC 47 CFR Part 2, 22(H), 24(E), 27, 90
The system is compliance with Subpart B is authorized under a DOC procedure

3.2 OUTLINE OF EUT

The xTablet T1180 sample, for LTE band supporting B2/B4/B5/B7/B12/B13/B26/B66/B41,The uplink frequency band of LTE B4 is covered by B66, the uplink frequency band of LTE B5 is covered by B26. For test reduction, the bands covered by other bands, e.g., B4/B5 are reduced.

4 TEST METHODOLOGY

4.1 GENERAL DESCRIPTION OF APPLIED STANDARDS

According to its specifications, the EUT must comply with the requirements of the following standards:
FCC 47 CFR Part 2, Subpart J
FCC 47 CFR Part 22H
FCC 47 CFR Part 24E
FCC 47 CFR Part 27
FCC 47 CFR Part 90
KDB971168 D01: v02r02
ANSI/TIA-603-D-2010, ANSI C63.26:2015

4.2 MEASUREMENT EQUIPMENT USED

For Spurious Emissions Test

Equipment	Manufacturer	Model No.	Serial No.	Last Cal.	Cal. Interval
EMI Test Receiver	Rohde & Schwarz	ESU 26	100154	May 17, 2020	1 Year
Pre-Amplifie	Lunar EM	LNA30M3G-25	J10100000070	May 17, 2020	1 Year
Bilog Antenna	Schwarzbeck	VULB9163	659	Sep 22, 2019	2 Year
Horn antenna	Schwarzbeck	BBHA9120D	9120D-1177	May 17, 2020	2 Year
Pre-Amplifie	SKET	LNPA_0118G-45	SK2019051801	May 17, 2020	1 Year
Loop Antenna	Schwarzbeck	FMZB1519	1519-012	July 14, 2019	2 Year
Spectrum Analyzer	Rohde & Schwarz	FSV40	100967	May 17, 2020	1 Year
Horn antenna	Schwarzbeck	BBHA9120D	9120D-1198	May 17, 2020	2 Year
Bilog Antenna	Schwarzbeck	VULB9163	660	July 16, 2019	2 Year
Cable	H+B	NmSm-05-C15052	N/A	May 17, 2020	1 Year
Cable	H+B	NmSm-2-C15201	N/A	May 17, 2020	1 Year
Cable	H+B	NmNm-7-C15702	N/A	May 17, 2020	1 Year
Cable	H+B	SAC-40G-1	414	May 17, 2020	1 Year
Cable	H+B	SUCOFLEX104	MY14871/4	May 17, 2020	
Cable	H+B	BLU18A-NmSm-6500	D8501	May 17, 2020	1 Year
Band reject Filter(50dB)	WI/DE	WRCGV-2400(2400-2485MHz)	2	May 17, 2020	1 Year

For other test items:

Equipment	Manufacturer	Model No.	Serial No.	Last Cal.	Cal. Interval
Vector Signal Generater	Agilent	N5182B	My53050553	May 17, 2020	1 Year
Analog Signal Generator	Agilent	N5171B	My53050878	May 17, 2020	1 Year
Signal Analyzer	Agilent	N9010A	My53470879	May 17, 2020	1 Year
Power Analyzer	Agilent	PS-X10-200	N/A	May 17, 2020	1 Year
Wideband Radio Communication Tester	R&S	CMW500	1201.0002K50-140822zk	May 17, 2020	1 Year
Test Accessories	Agilent	PS-X10-100	N/A	May 17, 2020	1 Year
Temperature&Humidity test chamber	ESPEC	EL-02KA	12107166	May 17, 2020	1 Year
Blocking Box	Agilent	AD211	N/A	May 17, 2020	1 Year

Remark: *Each piece of equipment is scheduled for calibration once a year.*

4.3 DESCRIPTION OF TEST MODES

The EUT has been tested under its typical operating condition. The CMW500 used to control the EUT staying in continuous transmitting and receiving mode for testing.

The EUT configuration for testing is installed on RF field strength measurement to meet the Commissions requirement and operating in a manner which intends to maximize its emission characteristics in a continuous normal application.

During all testing, EUT is in link mode with base station emulator at maximum power level.

The Transmitter was operated in the normal operating mode. The TX frequency was fixed which was for the purpose of the measurements.

Test of channel included the lowest and middle and highest frequency to perform the test, then record on this report.

Pre-defined engineering program for regulatory testing used to control the EUT for staying in continuous transmitting and receiving mode is programmed.

■ Test Mode and system config

Configure the CMW500 call box to support all LTE tests in respect to the 3GPP 36.521.

UE term. Conn: User defined Channels

Exp. Nominal Power Mode: According to UL Power Control Settings

RS EPRE: -75.0 dBm/15kHz Full Cell BW Power: -50.2 dBm

PSS Power Offset = SSS Power Offset = PBCH Power Offset = PCFICH Power Offset = PDCCH Power Offset = 0.0 dB

PHICH Power Offset = -12 dB

OCNG ON

PDSCH Power Offset PA: 0 dB, Power Ratio Index PB: 0 (rhoB/rhoA: 1)

Active TPC Setup: Max Power

Security Settings: Authentication OFF, NAS Security OFF, AS Security OFF

Integrity Algortithm: NULL

Milenage OFF

Configure the desired channel, BW, resource block allocation and modulation.

Connect to test set.

Set CMW500 TPC Setup to Max Power (Up power control command).

According to 3GPP 36.521, the output power level for Power Class 3 LTE is to be 23.0dBm + 2.7dB. The lower limit is shifted down by the MPR amount allowed for certain configurations. Maximum Power Reduction (MPR) is allowed due to higher order modulation and transmit bandwidth configurations. These MPR levels reduce the lower limit of each output power by the either 1 or 2dB per 3GPP 36.521.

Modulation	Channel bandwidth / Transmission bandwidth configuration[RB]						MPR (dB)
	1.4MHz	3MHz	5MHz	10MHz	15MHz	20MHz	
QPSK	> 5	> 4	> 8	> 12	> 16	> 18	≤ 1
16 QAM	≤ 5	≤ 4	≤ 8	≤ 12	≤ 16	≤ 18	≤ 1
16 QAM	> 5	> 4	> 8	> 12	> 16	> 18	≤ 2
64QAM	≤ 5	≤ 4	≤ 8	≤ 12	≤ 16	≤ 18	≤ 2
64QAM	> 5	> 4	> 8	> 12	> 16	> 18	≤ 3

≤

Modulation	CA bandwidth Class B and C							MPR (dB)
	25 RB + 50 RB	50 RB + 50 RB	25 RB + 100 RB	50 RB + 100 RB	75 RB + 75 RB	75 RB + 100 RB	100 RB + 100 RB	
QPSK	> 8 and ≤25	> 12 and ≤50	> 8 and ≤25	> 12 and ≤50	> 16 and ≤75	> 16 and ≤75	> 18 and ≤100	≤ 1
QPSK	> 25	> 50	> 25	> 50	> 75	> 75	> 100	≤ 1
16 QAM	≤8	≤12	≤8	≤12	≤16	≤16	≤18	≤ 2
16 QAM	> 8 and ≤25	> 12 and ≤50	> 8 and ≤25	> 12 and ≤50	> 16 and ≤75	> 16 and ≤75	> 18 and ≤100	≤ 2
16 QAM	> 25	> 50	> 25	> 50	> 75	> 75	> 100	≤ 3

Modulation	CA bandwidth Class B and C							MPR (dB)
	25 RB + 50 RB	50 RB + 50 RB	25 RB + 100 RB	50 RB + 100 RB	75 RB + 75 RB	75 RB + 100 RB	100 RB + 100 RB	
64 QAM	8 and a≤llocation wholly contained within a single CC	12 and a≤llocation wholly contained within a single CC	8 and a≤llocation wholly contained within a single CC	12 and a≤llocation wholly contained within a single CC	16 and a≤llocation wholly contained within a single CC	16 and a≤llocation wholly contained within a single CC	18 and a≤llocation wholly contained within a single CC	≤ 2
64 QAM	> 8 or allocation extends across two CC's	> 12 or allocation extends across two CC's	> 8 or allocation extends across two CC's	> 12 or allocation extends across two CC's	> 16 or allocation extends across two CC's	> 16 or allocation extends across two CC's	> 18 or allocation extends across two CC's	≤ 3

■ Test Environment

Environment Parameter	Selected Values During Tests	
Relative Humidity	Ambient	
Temperature	TN	Ambient
Ambient	VL	DC 6.84V
	VN	DC 7.6V
	VH	DC 8.36V
NOTE: VL= Lower Extreme Test Voltage VN= Nominal Voltage VH= Upper Extreme Test Voltage TN= Normal Temperature		

■ Test Channel and Frequency

Test Mode	Bandwidth	TX / RX	RF Channel		
			Low (L)	Middle (M)	High (H)
LTE BAND2	1.4MHz	TX	Channel 18607	Mid CH 18900	High CH 19193
			1850.7 MHz	1880.0 MHz	1909.3 MHz
		RX	Channel 607	Channel 900	Channel 1193
			1930.7 MHz	1960 MHz	1989.3MHz
	3MHz	TX	Channel 18615	Channel 18900	Channel 19185
			1851.5MHz	1880.0MHz	1908.5MHz
		RX	Channel 615	Channel 900	Channel 1185
			1931.5 MHz	1960 MHz	1988.5 MHz
	5MHz	TX	Channel 18625	Channel 18900	Channel 19175
			1852.5 MHz	1880 MHz	1907.5 MHz
		RX	Channel 625	Channel 900	Channel 1175
			1932.5 MHz	1960 MHz	1987.5 MHz
	10MHz	TX	Channel 18650	Channel 18900	Channel 19150
			1855 MHz	1880 MHz	1905 MHz
		RX	Channel 650	Channel 900	Channel 1150
			1935 MHz	1960 MHz	1985 MHz
	15MHz	TX	Channel 18675	Channel 18900	Channel 19125
			1857.5 MHz	1880 MHz	1902.5 MHz
		RX	Channel 675	Channel 900	Channel 1125
			1937.5 MHz	1960 MHz	1982.5 MHz
	20MHz	TX	Channel 18700	Channel 18900	Channel 19100
			1860 MHz	1880 MHz	1900 MHz
		RX	Channel 700	Channel 900	Channel 1100
			1940 MHz	1960 MHz	1980 MHz

Test Mode	Bandwidth	TX / RX	RF Channel		
			Low (L)	Middle (M)	High (H)
LTE BAND4	1.4MHz	TX	Channel 19957	Channel 20175	Channel 20393
			1710.7 MHz	1732.5 MHz	1754.3 MHz
		RX	Channel 1957	Channel 2175	Channel 2393
			2110.7 MHz	2132.5MHz	2154.3 MHz
	3MHz	TX	Channel 19965	Channel 20175	Channel 20385
			1711.5 MHz	1732.5 MHz	1753.5 MHz
		RX	Channel 2000	Channel 2175	Channel 2350
			2111.5 MHz	2132.5MHz	2153.5 MHz
	5MHz	TX	Channel 19975	Channel 20175	Channel 20375
			1712.5 MHz	1732.5 MHz	1752.5 MHz
		RX	Channel 1975	Channel 2175	Channel 2375
			2112.5 MHz	2132.5MHz	2152.5 MHz
	10MHz	TX	Channel 20000	Channel 20175	Channel 20350
			1715 MHz	1732.5 MHz	1750 MHz
		RX	Channel 2000	Channel 2175	Channel 2350
			2115 MHz	2132.5MHz	2150 MHz
	15MHz	TX	Channel 20025	Channel 20175	Channel 20325
			1717.5 MHz	1732.5 MHz	1747.5 MHz
		RX	Channel 2025	Channel 2175	Channel 2325
			2117.5 MHz	2132.5MHz	2147.5 MHz
	20MHz	TX	Channel 20050	Channel 20175	Channel 20300
			1720 MHz	1732.5 MHz	1745 MHz
		RX	Channel 2050	Channel 2175	Channel 2300

			2120 MHz	2132.5MHz	2145 MHz

Test Mode	Bandwidth	TX / RX	RF Channel		
			Low (L)	Middle (M)	High (H)
LTE BAND5	1.4MHz	TX	Channel 20407	Channel 20525	Channel 20643
			824.7 MHz	836.5 MHz	848.3 MHz
		RX	Channel 8697	Channel 2525	Channel 2643
			859.7 MHz	881.5 MHz	893.3 MHz
	3MHz	TX	Channel 20415	Channel 20525	Channel 20635
			825.5 MHz	836.5 MHz	847.5 MHz
		RX	Channel 2415	Channel 2525	Channel 2635
			870.5 MHz	881.5 MHz	892.5 MHz
	5MHz	TX	Channel 20425	Channel 20525	Channel 20625
			826.5 MHz	836.5 MHz	846.5 MHz
		RX	Channel 2425	Channel 2525	Channel 2625
			871.5 MHz	881.5 MHz	891.5 MHz
	10MHz	TX	Channel 20450	Channel 20525	Channel 20600
			829 MHz	836.5 MHz	844 MHz
		RX	Channel 2450	Channel 2525	Channel 2600
			874 MHz	881.5 MHz	889 MHz

Test Mode	Bandwidth	TX / RX	RF Channel		
			Low (L)	Middle (M)	High (H)
LTE BAND7	5MHz	TX	Channel 20775	Channel 21100	Channel 21425
			2502.5 MHz	2535 MHz	2567.5 MHz
		RX	Channel 2775	Channel 3100	Channel 3425
			2622.5 MHz	2655 MHz	2687.5 MHz
	10MHz	TX	Channel 20800	Channel 21100	Channel 21400
			2505 MHz	2535 MHz	2565 MHz
		RX	Channel 2800	Channel 3100	Channel 3400
			2625 MHz	2655 MHz	2685MHz
	15MHz	TX	Channel 20825	Channel 21100	Channel21375
			2507.5 MHz	2535 MHz	2562.5 MHz
		RX	Channel2825	Channel 3100	Channel3375
			2627.5 MHz	2655 MHz	2682.5 MHz
	20MHz	TX	Channel 20850	Channel 3100	Channel 21350
			2510 MHz	2655 MHz	2560 MHz
		RX	Channel 2850	Channel 3100	Channel 3350
			2630 MHz	2655 MHz	2680 MHz

Test Mode	Bandwidth	TX / RX	RF Channel		
			Low (L)	Middle (M)	High (H)
LTE BAND12	1.4MHz	TX	Channel 23017	Channel 23095	Channel 23173
			699.7 MHz	707.5 MHz	715.3 MHz
		RX	Channel 5017	Channel 5095	Channel 5173
			729.7 MHz	737.5 MHz	745.3 MHz
	3MHz	TX	Channel 23025	Channel 23095	Channel 23165
			700.5 MHz	707.5 MHz	714.5 MHz
		RX	Channel 5025	Channel 5095	Channel 5165
			730.5 MHz	737.5 MHz	744.5 MHz
	5MHz	TX	Channel 23035	Channel 23095	Channel 23155
			701.5 MHz	707.5 MHz	713.5 MHz
		RX	Channel 5035	Channel 5095	Channel 5155
			731.5 MHz	737.5 MHz	743.5 MHz
	10MHz	TX	Channel 23060	Channel 23095	Channel 23155
			704 MHz	707.5 MHz	711 MHz
		RX	Channel 5060	Channel 5095	Channel 5130
			734 MHz	737.5 MHz	741 MHz

Test Mode	Bandwidth	TX / RX	RF Channel		
			Low (L)	Middle (M)	High (H)
LTE BAND13	5MHz	TX	Channel 23205	Channel 23230	Channel 23255
			779.5 MHz	782 MHz	784.5 MHz
		RX	Channel 5205	Channel 5230	Channel 5255
			748.35 MHz	751 MHz	753.5 MHz
	10MHz	TX	Channel 23230	Channel 23230	Channel 23230
			782 MHz	782 MHz	782 MHz
		RX	Channel 5230	Channel 5230	Channel 5230
			751 MHz	751 MHz	751 MHz

Test Mode	Bandwidth	TX / RX	RF Channel		
			Low (L)	Middle (M)	High (H)
LTE BAND26	1.4MHz	TX	Channel 26697	Channel 26865	Channel 27033
			814.7 MHz	831.5 MHz	848.3 MHz
		RX	Channel 8697	Channel 8865	Channel 9033
			859.7 MHz	876.5 MHz	893.3 MHz
	3MHz	TX	Channel 26705	Channel 26865	Channel 27025
			815.5 MHz	831.5 MHz	847.5 MHz
		RX	Channel 8705	Channel 8865	Channel 9025
			860.5 MHz	876.5 MHz	892.5 MHz
	5MHz	TX	Channel 26715	Channel 26865	Channel 27015
			816.5 MHz	831.5 MHz	846.5 MHz
		RX	Channel 8715	Channel 8865	Channel 2625
			861.5 MHz	876.5 MHz	891.5 MHz
	10MHz	TX	Channel 26740	Channel 26865	Channel 26990
			819 MHz	831.5 MHz	844 MHz
		RX	Channel 8740	Channel 8865	Channel 2600
			864 MHz	876.5 MHz	889 MHz
	15MHz	TX	Channel 26765	Channel 26865	Channel 26965
			821.5 MHz	831.5 MHz	841.5 MHz
		RX	Channel 8765	Channel 8865	Channel 8965
			866.5 MHz	876.5 MHz	886.5MHz

Test Frequency ID		Bandwidth [MHz]	EARFCN	Frequency (UL and DL) [MHz]
LTE Band 41	Low Range	5	39675	2498.5
		10	39700	2501
		15	39725	2503.5
		20	39750	2506
	Mid-Range	5/10/15/20	40620	2593
	High Range	5	41565	2687.5
		10	41540	2685
		15	41515	2682.5
		20	41490	2680

LTE BAND66					
Test Frequency	Bandwidth [MHz]	NUL	Frequency of Uplink [MHz]	NDL	Frequency of Downlink [MHz]
Low Range	1.4	131979	1710.7	66443	2110.7
	3	131987	1711.5	66451	2111.5
	5	131997	1712.5	66461	2112.5
	10	132022	1715	66486	2115
	15	132047	1717.5	66511	2117.5
	20	132072	1720	66536	2120
Mid Range Tx	1.4/3/5/10/15/20	132322	1745	66786	2145
High Range	1.4	132665	1779.3	67129	2179.3
	3	132657	1778.5	67121	2178.5
	5	132647	1777.5	67111	2177.5
	10	132622	1775	67086	2175
	15	132597	1772.5	67061	2172.5
	20	132572	1770	67036	2170

LTE Band 7_CA											
Range	CC-Combo / NRB_agg [RB]	PCC					SCC				
		BW [RB]	NUL	fUL [MHz]	NDL	fDL [MHz]	BW [RB]	NUL	fUL [MHz]	NDL	fDL [MHz]
Low	50+100	50	20805	2505.5	2805	2625.5	100	20949	2519.9	2949	2639.9
		100	20850	2510	2850	2630	50	20994	2524.4	2994	2644.4
	75+50	75	20825	2507.5	2825	2627.5	50	20945	2519.5	2945	2639.5
	75+75	75	20825	2507.5	2825	2627.5	75	20975	2522.5	2975	2642.5
	75+100	75	20828	2507.8	2828	2627.8	100	20999	2524.9	2999	2644.9
		100	20850	2510	2850	2630	75	21021	2527.1	3021	2647.1
	100+100	100	20850	2510	2850	2630	100	21048	2529.8	3048	2649.8
Mid	50+100	50	21006	2525.6	3006	2645.6	100	21150	2540	3150	2660
		100	21051	2530.1	3051	2650.1	50	21195	2544.5	3195	2664.5
	75+50	75	21051	2530.1	3051	2650.1	50	21171	2542.1	3171	2662.1
	75+75	75	21025	2527.5	3025	2647.5	75	21175	2542.5	3175	2662.5
	75+100	75	21003	2525.3	3003	2645.3	100	21174	2542.4	3174	2662.4
		100	21026	2527.6	3026	2647.6	75	21197	2544.7	3197	2664.7
	100+100	100	21001	2525.1	3001	2645.1	100	21199	2544.9	3199	2664.9
High	50+100	50	21206	2545.6	3206	2665.6	100	21350	2560	3350	2680
		100	21251	2550.1	3251	2670.1	50	21395	2564.5	3395	2684.5
	75+50	75	21277	2552.7	3277	2672.7	50	21397	2564.7	3397	2684.7
	75+75	75	21225	2547.5	3225	2667.5	75	21375	2562.5	3375	2682.5
	75+100	75	21179	2542.9	3179	2662.9	100	21350	2560	3350	2680
		100	21201	2545.1	3201	2665.1	75	21372	2562.2	3372	2682.2
	100+100	100	21152	2540.2	3152	2660.2	100	21350	2560	3350	2680

LTE Band 41_CA							
Range	CC-Combo / NRB_agg [RB]	PCC			SCC		
		BW [RB]	NUL/DL	fUL/DL [MHz]	BW [RB]	NUL/DL	fUL/DL [MHz]
Low	25+100	25	39683	2499.3	100	39800	2511
		100	39750	2506	25	39867	2517.7
	50+75	50	39703	2501.3	75	39823	2513.3
		75	39725	2503.5	50	39845	2515.5
	50+100	50	39705	2501.5	100	39849	2515.9
		100	39750	2506	50	39894	2520.4
	75+75	75	39725	2503.5	75	39875	2518.5
	75+100	75	39728	2503.8	100	39899	2520.9
		100	39750	2506	75	39921	2523.1
	100+100	100	39750	2506	100	39948	2525.8
Mid	25+100	25	40528	2583.8	100	40645	2595.5
		100	40595	2590.5	25	40712	2602.2
	50+75	50	40549	2585.9	75	40669	2597.9
		75	40571	2588.1	50	40691	2600.1
	50+100	50	40526	2583.6	100	40670	2598.0
		100	40571	2588.1	50	40715	2602.5
	75+75	75	40545	2585.5	75	40695	2600.5
	75+100	75	40523	2583.3	100	40694	2600.4
		100	40546	2585.6	75	40717	2602.7
	100+100	100	40521	2583.1	100	40719	2602.9
High	25+100	25	41373	2668.3	100	41490	2680
		100	41440	2675	25	41557	2686.7
	50+75	50	41395	2670.5	75	41515	2682.5
		75	41417	2672.7	50	41537	2684.7
	50+100	50	41346	2665.6	100	41490	2680
		100	41391	2670.1	50	41535	2684.5
	75+75	75	41365	2667.5	75	41515	2682.5
	75+100	75	41319	2662.9	100	41490	2680
		100	41341	2665.1	75	41512	2682.2
	100+100	100	41292	2660.2	100	41490	2680

5 FACILITIES AND ACCREDITATIONS

5.1 FACILITIES

All measurement facilities used to collect the measurement data are located at

Bldg 69, Majialong Industry Zone District, Nanshan District, Shenzhen, China
The sites are constructed in conformance with the requirements of ANSI C63.7, ANSI C63.26 and CISPR Publication 22.

5.2 LABORATORY ACCREDITATIONS AND LISTINGS

Site Description

EMC Lab. : **Accredited by CNAS**
The Certificate Registration Number is L2291.
The Laboratory has been assessed and proved to be in compliance with CNAS-CL01 (identical to ISO/IEC 17025:2017)

Accredited by FCC
Designation Number: CN1204
Test Firm Registration Number: 882943

Accredited by A2LA
The Certificate Number is 4321.01.

Accredited by Industry Canada
The Conformity Assessment Body Identifier is CN0008

Name of Firm : EMTEK (SHENZHEN) CO., LTD.
Site Location : Building 69, Majialong Industry Zone, Nanshan District, Shenzhen, Guangdong, China

6 TEST SYSTEM UNCERTAINTY

The following measurement uncertainty levels have been estimated for tests performed on the apparatus:

Parameter	Uncertainty
Radio Frequency	±1x10^-5
RF Power Output	±1.0dB
Radiated Emission Test	±2.0dB
Occupied Bandwidth Test	±1.0dB
Band Edge Test	±3dB
All emission, radiated	±3dB
Antenna Port Emission	±3dB
Temperature	±0.5℃
Humidity	±3%

Measurement Uncertainty for a level of Confidence of 95%

7 SETUP OF EQUIPMENT UNDER TEST

7.1 RADIO FREQUENCY TEST SETUP 1

The sample component's antenna ports(s) of the EUT are connected to the measurement instrument per an appropriate attenuator. The EUT is controlled by PC/software to emit the specified signals for the purpose of measurements.

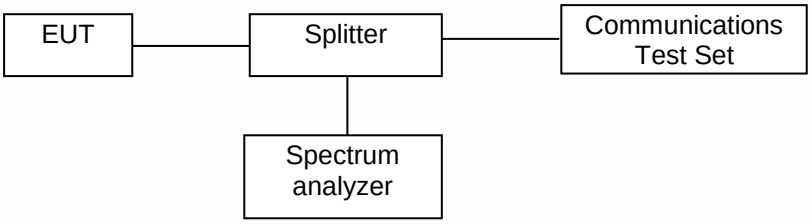

7.2 RADIO FREQUENCY TEST SETUP 2

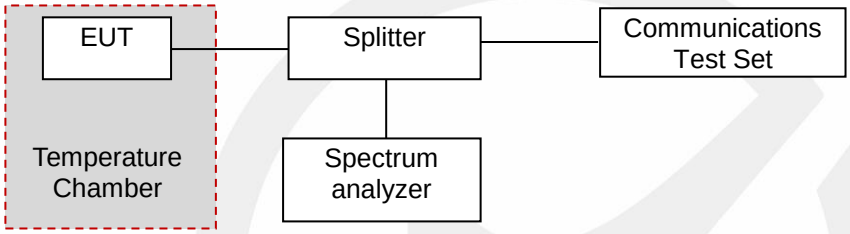

7.3 RADIO FREQUENCY TEST SETUP 3

The test site semi-anechoic chamber has met the requirement of NSA tolerance 4 dB according to the standards: ANSI C63.10. The test distance is 3m.The setup is according to the requirements in Section 13.1.4.1 of ANSI C63.26-2015 and CAN/CSA-CEI/IEC CISPR 22.

Below 30MHz：
The EUT is placed on a turntable 0.8 meters above the ground in the chamber, 3 meter away from the antenna (loop antenna). The Antenna should be positioned with its plane vertical at the specified distance from the EUT and rotated about its vertical axis for maximum response at each azimuth about the EUT. The center of the loop shall be 1 m above the ground. For certain applications, the loop antenna plane may also need to be positioned horizontally at the specified distance from the EUT.

Above 30MHz：
The EUT is placed on a turntable 0.8 meters above the ground in the chamber, 3 meter away from the antenna. The maximal emission value is acquired by adjusting the antenna height, polarisation and turntable azimuth. Normally, the height range of antenna is 1 m to 4 m, the azimuth range of turntable is 0° to 360°, and the receive antenna has two polarizations Vertical (V) and Horizontal (H).

Above 1GHz:
(Note: the FCC's permission to use 1.5m as an alternative per TCBC Conf call of Dec. 2, 2014.)
The EUT is placed on a turntable 1.5 meters above the ground in the chamber, 3 meter away from the antenna. The maximal emission value is acquired by adjusting the antenna height, polarisation and turntable azimuth. Normally, the height range of antenna is 1 m to 4 m, the azimuth range of turntable is 0° to 360°, and the receive antenna has two polarizations Vertical (V) and Horizontal (H).

(a) Radiated Emission Test Set-Up, Frequency Below 30MHz

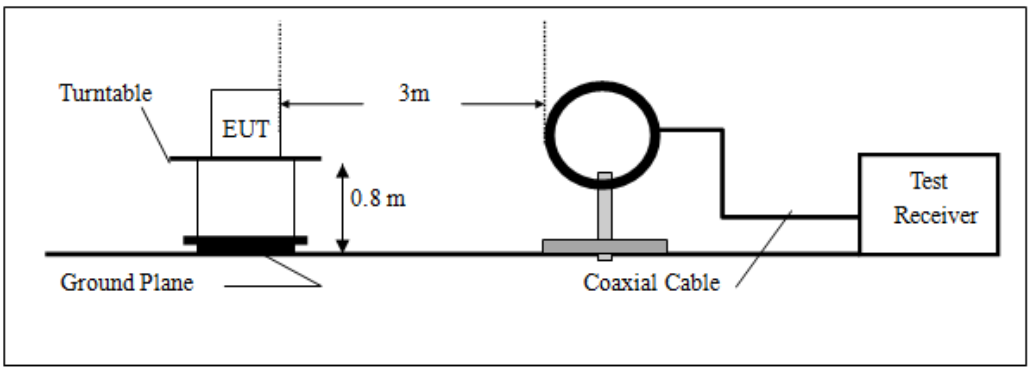

(b)Radiated Emission Test Set-Up, Frequency Below 1000MHz

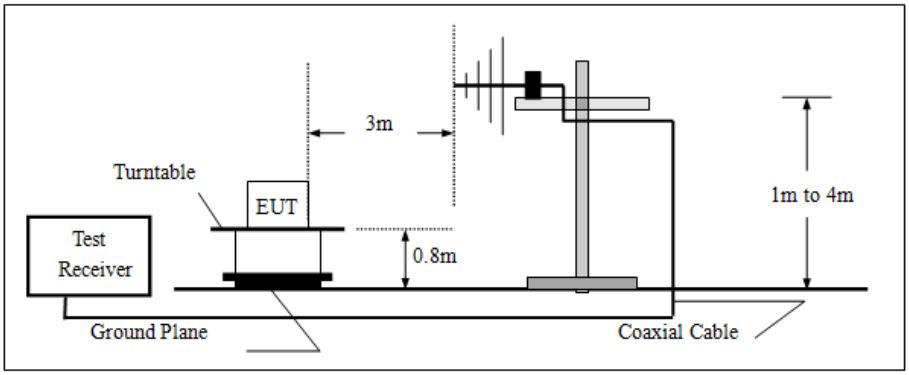

(c) Radiated Emission Test Set-Up, Frequency above 1000MHz

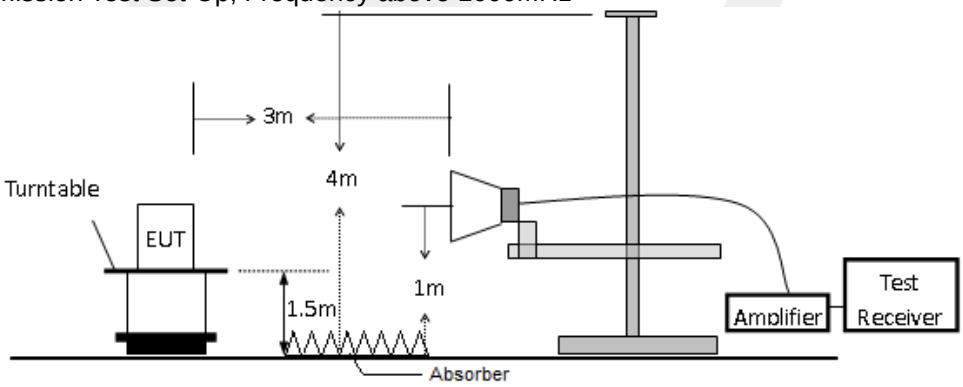

7.4 SUPPORT EQUIPMENT

Item	Equipment	Mfr/Brand	Model/Type No.	FCC ID	Note
N/A	N/A	N/A	N/A	N/A	N/A

Notes:

1. *All the equipment/cables were placed in the worst-case configuration to maximize the emission during the test.*
2. *Grounding was established in accordance with the manufacturer's requirements and conditions for the intended use.*

8 TEST REQUIREMENTS

8.1 RF POWER OUTPUT

8.1.1 Conformance Limit

No limit requirement.

8.1.2 Test Configuration

Test according to clause 7.1 radio frequency test setup 1

8.1.3 Test Procedure

Connect the EUT to Universal Radio Communication Tester CMU200 or CMU500 via the antenna connector.
A call is set up by the SS according to the generic call set up procedure on a channel with ARFCN in the ARFCN range, power control level set to Max power. The frequency band is set as selected frequency,
The RF output of the transmitter was connected to base station simulator.
Set EUT at maximum average power by base station simulator.
Set RBW = 1-5% of the OBW, not to exceed 1 MHz.
Set VBW ≥ 3 × RBW.
Number of points in sweep ≥ 2 × span / RBW. (This gives bin-to-bin spacing ≤ RBW/2, so that narrowband signals are not lost between frequency bins.)
Sweep time = auto.
Detector = RMS (power averaging).
Set sweep trigger to “free run”.
Trace average at least 100 traces in power averaging (i.e., RMS) mode; however, the number of traces to be averaged shall be increased above 100 as needed such that the average accurately represents the true average over the on and off periods of the transmitter.
Compute power by integrating the spectrum across the OBW of the signal using the instrument’s band power measurement function with band limits set equal to the OBW band edges. If the instrument does not have a band power function, sum the spectrum levels (in power units) at intervals equal to the RBW extending across the entire OBW of the spectrum.
Add 10 log (1/x), where x is the duty cycle, to the measured power in order to compute the average power during the actual transmission times (because the measurement represents an average over both the on and off times of the transmission). For example, add 10 log (1/0.25) = 6 dB if the duty cycle is a constant 25%.
Measure lowest, middle, and highest channels for each bandwidth and different modulation.
Measure and record the results in the test report.

8.1.4 Test Results

Pass

Note:
The data of LTE Band 7_CA and LTE Band 41_CA are recorded as below. And the other data please see Appendix 4G BAND2, BAND4, BAND5, BAND7, BAND12, BAND13, BAND26, BAND66, BAND41.

LTE Band 7_CA Maximum Average Power (dBm)								
BW(MHz)	Modulation	PCC		SCC		Lowest	Middle	Highest
20+20	QPSK	0	0	1	99	24.32	23.98	23.62
		1	99	0	0	**24.82**	23.98	24.73
		100	0	0	0	23.16	23.28	22.95
		100	0	100	0	22.26	22.92	23.44
		1	0	1	99	19.21	19.37	18.78
		1	0	1	0	19.38	19.32	19.71
		1	99	1	0	23.93	23.76	23.54
		100	0	1	99	20.65	20.72	20.16
	16QAM	0	0	1	99	23.19	23.03	23.63
		1	99	0	0	24.07	24.19	23.64
		100	0	0	0	22.50	21.98	22.13
		100	0	100	0	22.21	21.68	22.76
		1	0	1	99	19.03	18.96	18.94
		1	0	1	0	19.11	19.12	19.54
		1	99	1	0	23.61	23.69	23.21
	64QAM	0	0	1	99	20.56	20.13	19.93
		1	99	0	0	22.33	22.37	22.58
		100	0	0	0	22.80	23.17	23.12
		100	0	100	0	21.10	21.09	21.97
		1	0	1	99	20.57	20.91	19.46
		1	0	1	0	18.05	17.63	17.89
		1	99	1	0	18.53	18.20	17.90
		100	0	1	99	19.27	20.03	20.24

LTE Band 7_CA Maximum Average Power (dBm)								
BW(MHz)	Modulation	PCC		SCC		Lowest	Middle	Highest
20+15	QPSK	100	0	75	0	21.23	22.01	23.59
		1	0	1	74	17.62	18.87	**24.10**
		1	99	1	0	23.85	22.88	22.61
	16QAM	100	0	75	0	21.58	21.79	23.74
		1	0	1	74	18.57	19.02	19.02
		1	99	1	0	23.83	22.78	19.42
	64QAM	100	0	75	0	20.59	20.36	22.75
		1	0	1	74	17.15	16.55	19.66
		1	99	1	0	19.89	19.35	22.24
15+20	QPSK	75	0	100	0	21.60	22.20	23.20
		1	74	1	0	18.14	17.64	22.12
		1	0	1	99	22.54	23.26	22.59
	16QAM	75	0	100	0	21.18	21.47	18.06
		1	74	1	0	18.50	18.72	18.68
		1	0	1	99	22.78	22.51	22.72
	64QAM	75	0	100	0	21.04	19.49	19.78
		1	74	1	0	16.91	16.92	22.36
		1	0	1	99	19.75	19.87	23.25

LTE Band 7_CA Maximum Average Power (dBm)								
BW(MHz)	Modulation	PCC		SCC		Lowest	Middle	Highest
15+15	QPSK	75	0	75	0	22.41	22.67	22.60
		1	0	1	0	19.14	18.88	18.71
		1	74	1	74	**24.08**	23.80	24.04
	16QAM	75	0	75	0	21.38	22.14	21.78
		1	0	1	0	19.41	18.45	18.48
		1	74	1	74	22.88	23.16	23.19
	64QAM	75	0	75	0	20.17	20.47	20.42
		1	0	1	0	17.92	17.09	18.01
		1	74	1	74	19.93	20.04	19.89

LTE Band 7_CA Maximum Average Power (dBm)								
BW(MHz)	Modulation	PCC		SCC		Lowest	Middle	Highest
15+10	QPSK	75	0	50	0	22.29	21.79	21.86
		1	0	1	49	19.16	18.76	18.86
		1	74	1	0	23.49	**23.69**	23.61
	16QAM	75	0	50	0	22.09	21.77	21.27
		1	0	1	49	18.82	18.94	18.66
		1	74	1	0	23.39	23.47	22.85
	64QAM	75	0	50	0	20.98	21.02	20.75
		1	0	1	49	18.04	17.68	17.59
		1	74	1	0	19.54	20.13	19.57

LTE Band 7_CA Maximum Average Power (dBm)								
BW(MHz)	Modulation	PCC		SCC		Lowest	Middle	Highest
20+10	QPSK	100	0	50	0	22.19	22.55	22.17
		1	0	1	49	18.70	19.19	18.65
		1	99	1	0	24.02	23.81	**24.22**
	16QAM	100	0	50	0	21.89	21.30	21.78
		1	0	1	49	19.01	18.57	18.91
		1	99	1	0	23.66	23.51	23.12
	64QAM	100	0	50	0	20.35	21.06	20.72
		1	0	1	49	17.74	17.45	17.83
		1	99	1	0	19.45	20.05	19.92
10+20	QPSK	50	0	100	0	22.00	22.14	22.41
		1	49	1	0	18.95	19.05	18.73
		1	0	1	99	23.26	23.80	23.39
	16QAM	50	0	100	0	21.49	21.43	21.51
		1	49	1	0	18.60	19.37	19.36
		1	0	1	99	22.92	23.27	23.22
	64QAM	50	0	100	0	20.78	20.24	20.70
		1	49	1	0	17.96	17.42	17.84
		1	0	1	99	19.71	19.99	19.73

LTE Band 41_CA Maximum Average Power (dBm)								
BW(MHz)	Modulation	PCC		SCC		Lowest	Middle	Highest
20+20	QPSK	0	0	1	99	25.34	24.76	25.42
		1	99	0	0	24.89	25.37	**25.64**
		100	0	0	0	24.81	24.66	24.09
		100	0	100	0	23.61	23.17	22.89
		1	0	1	99	20.21	20.43	20.21
		1	0	1	0	21.00	20.92	20.15
		1	99	1	0	24.92	24.51	25.16
		100	0	1	99	21.82	21.64	21.39
	16QAM	0	0	1	99	24.27	24.75	24.37
		1	99	0	0	24.71	24.47	25.18
		100	0	0	0	23.41	22.87	22.89
		100	0	100	0	23.17	22.53	23.05
		1	0	1	99	20.92	20.08	20.06
		1	0	1	0	21.13	21.05	20.37
		1	99	1	0	24.70	25.46	25.47
	64QAM	0	0	1	99	21.85	21.76	21.17
		1	99	0	0	23.22	23.58	23.05
		100	0	0	0	24.12	23.70	23.56
		100	0	100	0	22.06	22.73	22.33
		1	0	1	99	21.76	21.46	21.63
		1	0	1	0	19.37	18.96	19.27
		1	99	1	0	18.83	19.52	19.15
		100	0	1	99	20.21	20.94	20.75

LTE Band 41_CA Maximum Average Power (dBm)								
BW(MHz)	Modulation	PCC		SCC		Lowest	Middle	Highest
20+15	QPSK	100	0	75	0	23.16	23.51	23.24
		1	0	1	74	20.84	20.57	20.59
		1	99	1	0	25.13	25.11	24.87
	16QAM	100	0	75	0	22.67	22.84	22.52
		1	0	1	74	20.08	20.52	20.90
		1	99	1	0	**25.28**	24.44	24.44
	64QAM	100	0	75	0	21.93	22.20	22.14
		1	0	1	74	18.99	19.36	18.51
		1	99	1	0	20.23	19.98	20.38
15+20	QPSK	75	0	100	0	23.68	23.33	23.36
		1	74	1	0	20.63	20.89	20.08
		1	0	1	99	24.47	24.69	24.25
	16QAM	75	0	100	0	22.87	22.43	22.34
		1	74	1	0	20.29	20.56	20.09
		1	0	1	99	24.59	24.68	25.17
	64QAM	75	0	100	0	21.47	21.31	21.23
		1	74	1	0	19.38	19.28	19.11
		1	0	1	99	20.98	20.58	20.29

LTE Band 41_CA Maximum Average Power (dBm)								
BW(MHz)	Modulation	PCC		SCC		Lowest	Middle	Highest
15+15	QPSK	75	0	75	0	23.32	22.99	23.41
		1	0	1	0	20.54	20.05	20.08
		1	74	1	74	24.78	24.70	24.37
	16QAM	75	0	75	0	22.41	22.90	23.01
		1	0	1	0	20.61	20.05	20.19
		1	74	1	74	**25.29**	25.09	24.53
	64QAM	75	0	75	0	21.87	21.83	21.33
		1	0	1	0	18.85	19.26	18.77
		1	74	1	74	20.09	20.42	20.17

LTE Band 41_CA Maximum Average Power (dBm)								
BW(MHz)	Modulation	PCC		SCC		Lowest	Middle	Highest
20+10	QPSK	100	0	50	0	23.59	23.52	23.34
		1	0	1	49	20.09	20.63	20.00
		1	99	1	0	24.44	24.74	**25.29**
	16QAM	100	0	50	0	22.60	22.55	22.87
		1	0	1	49	19.98	20.40	20.34
		1	99	1	0	24.33	24.85	24.82
	64QAM	100	0	50	0	21.49	21.46	21.40
		1	0	1	49	18.70	18.56	18.45
		1	99	1	0	20.23	20.23	20.55
10+20	QPSK	50	0	100	0	23.63	23.02	23.14
		1	49	1	0	20.44	20.51	20.60
		1	0	1	99	24.54	24.90	25.26
	16QAM	50	0	100	0	22.61	23.01	22.49
		1	49	1	0	20.28	20.79	20.28
		1	0	1	99	24.71	25.29	25.23
	64QAM	50	0	100	0	22.19	22.08	22.17
		1	49	1	0	19.37	18.98	19.14
		1	0	1	99	21.03	20.87	20.62

LTE Band 41_CA Maximum Average Power (dBm)								
BW(MHz)	Modulation	PCC		SCC		Lowest	Middle	Highest
10+15	QPSK	75	0	50	0	23.67	23.49	23.64
		1	0	1	49	20.02	20.64	20.81
		1	74	1	0	24.64	25.12	**25.22**
	16QAM	75	0	50	0	22.82	22.17	22.16
		1	0	1	49	20.29	20.39	20.19
		1	74	1	0	24.99	24.64	24.50
	64QAM	75	0	50	0	21.41	22.14	22.08
		1	0	1	49	18.92	19.10	18.92
		1	74	1	0	20.15	21.02	21.00

LTE Band 41_CA Maximum Average Power (dBm)								
BW(MHz)	Modulation	PCC		SCC		Lowest	Middle	Highest
20+5	QPSK	100	0	25	0	22.95	23.17	23.49
		1	0	1	24	20.57	20.85	20.87
		1	99	1	0	**25.26**	24.89	24.89
	16QAM	100	0	25	0	22.25	22.59	22.63
		1	0	1	24	20.85	20.39	20.26
		1	99	1	0	24.89	24.99	24.50
	64QAM	100	0	25	0	22.40	21.23	21.96
		1	0	1	24	18.83	19.15	18.53
		1	99	1	0	21.00	20.55	21.08
5+20	QPSK	25	0	100	0	23.20	23.10	23.57
		1	24	1	0	20.05	20.81	20.63
		1	0	1	99	24.91	24.47	24.92
	16QAM	25	0	100	0	22.38	22.64	22.97
		1	24	1	0	20.46	20.77	20.55
		1	0	1	99	25.20	24.75	24.84
	64QAM	25	0	100	0	21.71	21.87	21.41
		1	24	1	0	19.22	19.22	18.64
		1	0	1	99	20.39	20.44	20.19

8.2 EFFECTIVE (ISOTROPIC) RADIATED POWER

8.2.1 Conformance Limit

LTE BAND2 FCC Part 24.232
Mobile and portable stations are limited to 2 watts EIRP and the equipment must employ a means for limiting power to the minimum necessary for successful communications.

LTE BAND4(66) FCC Part 27.50
Fixed, mobile, and portable (hand-held) stations operating in the 1710-1755 MHz band and mobile and portable stations operating in the 1695-1710 MHz and 1755-1780 MHz bands are limited to 1 watt EIRP. Fixed stations operating in the 1710-1755 MHz band are limited to a maximum antenna height of 10 meters above ground. Mobile and portable stations operating in these bands must employ a means for limiting power to the minimum necessary for successful communications.

LTE BAND5 (26) FCC Part 22.913, Part 90.635
According to Part 22.913(a) the ERP of mobile transmitters and auxiliary test transmitters must not exceed 7 Watts; According to Part 90.635(b),the maximum output power of the transmitter for mobile stations is 100 watts (20 dBw);

LTE BAND7 FCC Part 27.50
Mobile and other user stations. Mobile stations are limited to 2.0 watts EIRP. All user stations are limited to 2.0 watts transmitter output power.

LTE BAND12 FCC Part 27.50
Portable stations (hand-held devices) in the 600 MHz uplink band and the 698-746 MHz band, and fixed and mobile stations in the 600 MHz uplink band are limited to 3 watts ERP.

LTE BAND13 FCC Part 27.50
Portable stations (hand-held devices) transmitting in the 746-757 MHz, 776-788 MHz, and 805-806 MHz bands are limited to 3 watts ERP

LTE BAND30 FCC Part 27.50
Mobile and portable stations. (i) For mobile and portable stations transmitting in the 2305-2315 MHz band or the 2350-2360 MHz band, the average EIRP must not exceed 50 milliwatts within any 1 megahertz of authorized bandwidth, except that for mobile and portable stations compliant with 3GPP LTE standards

LTE BAND41 FCC Part 27.50
Mobile and other user stations. Mobile stations are limited to 2.0 watts EIRP. All user stations are limited to 2.0 watts transmitter output power.

8.2.2 Test Configuration

Test according to clause 7.3 radio frequency test setup 3

8.2.3 Test Procedure

Connect the EUT to Universal Radio Communication Tester CMU200 or CMU500 via the antenna connector. A call is set up by the SS according to the generic call set up procedure on a channel with ARFCN in the Mid ARFCN range, power control level set to Max power. MS TXPWR_MAX_CCH is set to the maximum value supported by the Power Class of the Mobile under test
The instrument must have an available measurement/resolution bandwidth that is equal to or exceeds the OBW. If this capability is available, then the following procedure can be used to determine the total peak output power.

a) Set the RBW ≥ OBW.
b) Set VBW ≥ 3 × RBW.
c) Set span ≥ 2 × RBW
d) Sweep time = auto couple.
e) Detector = peak.
f) Ensure that the number of measurement points ≥ span/RBW.
g) Trace mode = max hold.

h) Allow trace to fully stabilize.

i) Use the peak marker function to determine the peak amplitude level.

The EUT was placed on a turn table which is 0.8m above ground plane. Maximum procedure was performed on the six highest emissions to ensure EUT compliance. And also, each emission was to be maximized by changing the polarization of receiving antenna both horizontal and vertical. Repeat above procedures until all frequency measured was complete.

A receiving antenna was placed on the antenna mast 3 meters from the EUT for emission measurements. The height of receiving antenna is 1.5m. The test setup refers to figure below. Detected emissions were maximized at each frequency by rotating the EUT through 360° and adjusting the receiving antenna polarization. The radiated emission measurements of all transmit frequencies in three channels (High, Middle, Low) weremeasured with peak detector.

The EUT is then put into continuously transmitting mode at its maximum power level during the test. And the maximum value of the receiver should be recorded as (Pr).

The EUT shall be replaced by a substitution antenna. The test setup refers to figure below. In the chamber, an substitution antenna for the frequency band of interest is placed at the reference point of the chamber. An RF Signal source for the frequency band of interest is connected to the substitution antenna with a cable that has been constructed to not interfere with the radiation pattern of the antenna. A power (PMea) is applied to the input of the substitution antenna, and adjust the level of the signal generator output until the value of the receiver reach the previously recorded (Pr). The power of signal source (PMea) is recorded. The test should be performed by rotating the test item and adjusting the receiving antennapolarization.

A amplifier should be connected to the Signal Source output port. And the cable should be connect between the Amplifier and the Substitution Antenna.

The cable loss (Pcl) ,the Substitution Antenna Gain (Ga) and the Amplifier Gain (PAg) should be recorded after test.

The measurement results are obtained as described below:

Power(EIRP)=PMea- PAg - Pcl - Ga

This value is EIRP since the measurement is calibrated using an antenna of known gain (2.15 dBi) and known input power.

ERP can be calculated from EIRP by subtracting the gain of the dipole,

ERP = EIRP -2.15dBi.

8.2.4 Test Results

Pass

Note:The data of LTE are recorded as below.

Band/BW	Modulation	RB Size	RB Offset	Low CH 18607	Mid CH 18900	High CH 19193
				1850.7 MHz	1880.0 MHz	1909.3 MHz
2/1.4	QPSK	1	0	22.38	22.90	23.03
		1	2	22.50	23.20	22.76
		1	5	22.74	22.62	22.57
		3	0	22.48	22.91	22.42
		3	1	22.70	**23.27**	22.30
		3	3	23.07	22.52	23.03
		6	0	21.62	21.90	22.07
	16QAM	1	0	21.89	21.67	21.40
		1	2	21.75	22.14	21.88
		1	5	21.67	21.73	21.83
		3	0	21.91	**22.37**	21.69
		3	1	21.79	22.14	21.61
		3	3	21.41	21.98	21.47
		6	0	21.13	20.76	20.49
	64QAM	1	0	20.38	20.79	20.91
		1	7	20.83	21.15	20.24
		1	14	20.18	21.31	20.60
		8	0	20.54	20.59	20.39
		8	3	20.91	21.14	20.14
		8	7	20.71	20.91	20.92
		15	0	19.16	19.89	20.06

Band/BW	Modulation	RB Size	RB Offset	Low CH 18615	Mid CH 18900	High CH 19185
				1851.5 MHz	1880.0 MHz	1908.5 MHz
2/3	QPSK	1	0	22.51	23.46	22.87
		1	7	22.82	**23.49**	22.51
		1	14	22.42	22.42	22.89
		8	0	21.78	21.94	22.25
		8	3	21.99	21.37	22.31
		8	7	22.03	22.38	21.88
		15	0	21.74	22.13	21.94
	16QAM	1	0	21.65	22.06	21.88
		1	7	22.15	21.48	22.15
		1	14	21.36	21.91	**22.22**
		8	0	20.89	20.75	21.09
		8	3	20.59	20.56	20.28
		8	7	20.63	20.79	21.17
		15	0	20.62	21.26	20.44
	64QAM	1	0	20.61	20.40	20.48
		1	7	20.83	20.21	21.10
		1	14	20.34	21.03	20.23
		8	0	19.42	19.76	19.42
		8	3	19.51	19.58	19.40
		8	7	20.10	19.62	19.30
		15	0	19.18	19.38	19.67

Band/BW	Modulation	RB Size	RB Offset	Low CH 18625	Mid CH 18900	High CH 19175
				1852.5 MHz	1880.0 MHz	1907.5 MHz
2/5	QPSK	1	0	22.59	23.15	22.38
		1	12	22.26	22.51	22.53
		1	24	22.30	22.76	**23.24**
		12	0	21.73	22.14	21.32
		12	6	21.96	22.31	21.92
		12	13	21.38	22.16	21.46
		25	0	22.01	21.93	22.05
	16QAM	1	0	21.41	21.64	21.39
		1	12	21.31	22.10	21.82
		1	24	21.45	21.61	**22.14**
		12	0	20.34	20.90	20.92
		12	6	20.71	21.19	20.55
		12	13	20.68	20.73	20.72
		25	0	20.21	21.08	20.29
	64QAM	1	0	20.60	21.25	20.92
		1	12	20.21	20.74	20.81
		1	24	20.38	20.55	20.78
		12	0	20.08	20.41	19.61
		12	6	19.08	19.57	19.62
		12	13	19.84	19.62	19.39
		25	0	19.82	19.77	19.78

Band/BW	Modulation	RB Size	RB Offset	Low CH 18650	Mid CH 18900	High CH 19150
				1855.0 MHz	1880.0 MHz	1905.0 MHz
2/10	QPSK	1	0	22.89	**23.52**	22.79
		1	24	23.03	22.39	22.75
		1	49	23.12	22.96	22.87
		25	0	21.38	21.73	21.72
		25	12	21.35	21.52	21.98
		25	25	21.84	22.41	21.82
		50	0	21.43	21.81	21.55
	16QAM	1	0	21.74	21.42	**22.23**
		1	24	22.23	22.00	21.67
		1	49	22.03	21.84	21.77
		25	0	20.47	20.65	20.44
		25	12	20.68	21.13	20.81
		25	25	20.21	21.08	21.21
		50	0	20.86	20.65	21.01
	64QAM	1	0	20.35	21.16	20.89
		1	24	20.41	20.83	20.27
		1	49	20.46	21.15	20.39
		25	0	19.39	20.10	19.47
		25	12	19.45	19.55	19.83
		25	25	19.92	20.00	20.12
		50	0	19.17	19.89	20.20

Band/BW	Modulation	RB Size	RB Offset	Low CH 18675	Mid CH 18900	High CH 19125
				1857.5 MHz	1880.0 MHz	1902.5 MHz
2/15	QPSK	1	0	22.40	**23.42**	22.83
		1	37	22.78	23.24	22.54
		1	74	22.95	22.96	22.91
		36	0	21.95	22.35	21.72
		36	19	21.89	22.22	22.38
		36	39	21.81	22.43	22.27
		75	0	21.70	21.75	22.36
	16QAM	1	0	21.99	21.87	21.41
		1	37	21.87	**22.55**	21.47
		1	74	21.82	22.37	21.98
		36	0	21.23	21.35	20.70
		36	19	21.21	21.37	20.65
		36	39	20.61	21.31	20.98
		75	0	20.90	21.02	20.92
	64QAM	1	0	21.16	20.99	20.98
		1	37	20.89	20.59	21.02
		1	74	20.98	21.27	21.05
		36	0	19.84	20.51	20.12
		36	19	19.50	19.74	19.38
		36	39	19.42	20.24	19.37
		75	0	19.64	19.89	19.58

Band/BW	Modulation	RB Size	RB Offset	Low CH 18700	Mid CH 18900	High CH 19100
				1860.0 MHz	1880.0 MHz	1900.0 MHz
2/20	QPSK	1	0	22.43	**23.21**	22.44
		1	50	23.00	23.09	23.00
		1	99	23.08	23.12	22.86
		50	0	22.04	22.36	22.26
		50	25	22.05	22.28	22.16
		50	50	21.76	21.84	22.28
		100	0	21.51	21.73	21.75
	16QAM	1	0	21.37	21.63	21.75
		1	50	21.37	21.95	21.81
		1	99	21.97	21.83	**22.27**
		50	0	20.61	20.72	20.76
		50	25	21.06	21.43	21.41
		50	50	21.11	21.39	21.10
		100	0	20.88	21.29	20.53
	64QAM	1	0	20.24	20.87	20.31
		1	50	20.82	21.27	20.54
		1	99	20.97	20.63	20.42
		50	0	20.30	19.64	19.99
		50	25	19.85	19.58	19.40
		50	50	19.32	20.22	19.29
		100	0	20.10	19.74	19.88

Band/BW	Modulation	RB Size	RB Offset	Low CH 19957	Mid CH 20175	High CH 20393
				Frequency 1710.7 MHz	Frequency 1732.5 MHz	Frequency 1754.3 MHz
4/1.4	QPSK	1	0	22.83	22.77	23.45
		1	2	**23.59**	23.34	22.96
		1	5	23.15	22.79	23.48
		3	0	22.52	21.72	21.64
		3	1	22.24	22.05	22.29
		3	3	21.80	21.51	22.39
		6	0	22.51	22.57	22.49
	16QAM	1	0	22.42	22.45	21.92
		1	2	**22.55**	22.31	21.54
		1	5	21.99	22.17	21.61
		3	0	21.42	21.39	21.30
		3	1	21.38	20.94	20.59
		3	3	21.27	20.91	21.35
		6	0	20.73	21.10	21.26
	64QAM	1	0	20.87	20.89	20.48
		1	2	20.81	20.90	20.96
		1	5	20.69	20.80	20.45
		3	0	19.63	19.59	19.58
		3	1	20.10	20.41	19.51
		3	3	19.72	20.17	20.07
		6	0	20.25	19.73	19.72

Band/BW	Modulation	RB Size	RB Offset	Low CH 19965	Mid CH 20175	High CH 20385
				Frequency 1711.5 MHz	Frequency 1732.5 MHz	Frequency 1753.5 MHz
4/3	QPSK	1	0	23.23	23.45	23.10
		1	7	23.29	22.54	**23.50**
		1	14	22.85	23.27	22.90
		8	0	22.14	22.37	21.57
		8	3	22.58	21.94	21.92
		8	7	22.03	21.96	22.04
		15	0	22.63	21.78	21.62
	16QAM	1	0	22.25	21.83	21.91
		1	7	22.28	21.86	21.85
		1	14	**22.52**	21.55	22.04
		8	0	21.30	20.68	20.62
		8	3	21.35	21.57	20.76
		8	7	20.75	21.22	21.39
		15	0	21.29	20.86	21.26
	64QAM	1	0	20.71	20.52	20.71
		1	7	21.17	20.96	20.64
		1	14	21.40	20.79	20.84
		8	0	20.51	20.33	19.50
		8	3	19.82	19.64	20.39
		8	7	20.07	19.43	20.04
		15	0	19.75	19.72	19.76

Band/BW	Modulation	RB Size	RB Offset	Low CH 19975	Mid CH 20175	High CH 20375
				Frequency 1712.5 MHz	Frequency 1732.5 MHz	Frequency 1752.5 MHz
4/5	QPSK	1	0	23.00	**23.35**	23.05
		1	12	22.92	22.73	22.58
		1	24	23.14	23.27	23.02
		12	0	22.49	21.75	22.36
		12	6	22.46	22.59	22.09
		12	13	22.40	22.36	21.94
		25	0	22.37	22.52	21.84
	16QAM	1	0	22.35	22.09	21.65
		1	12	22.29	22.08	**22.44**
		1	24	21.86	22.16	21.55
		12	0	21.09	21.11	20.73
		12	6	21.58	20.73	20.82
		12	13	21.27	20.92	20.95
		25	0	21.18	20.80	20.51
	64QAM	1	0	20.71	20.95	20.83
		1	12	20.87	20.77	20.56
		1	24	20.55	21.09	20.67
		12	0	20.42	20.13	19.62
		12	6	20.46	20.26	19.85
		12	13	20.26	20.48	19.63
		25	0	20.48	19.54	19.76

Band/BW	Modulation	RB Size	RB Offset	Low CH 20000	Mid CH 20175	High CH 20350
				Frequency 1715 MHz	Frequency 1732.5 MHz	Frequency 1750 MHz
4/10	QPSK	1	0	23.08	23.46	23.17
		1	24	23.62	22.88	23.42
		1	49	**23.67**	22.81	23.31
		25	0	22.59	21.85	22.04
		25	12	22.26	21.98	22.23
		25	25	21.91	22.66	22.02
		50	0	22.77	22.48	22.23
	16QAM	1	0	21.91	**22.60**	22.11
		1	24	22.40	22.29	22.24
		1	49	22.36	21.82	22.10
		25	0	21.14	20.96	21.65
		25	12	21.47	20.87	21.23
		25	25	21.54	21.12	20.79
		50	0	20.91	20.68	20.81
	64QAM	1	0	20.80	21.28	21.06
		1	24	21.01	20.72	20.62
		1	49	21.11	21.40	21.38
		25	0	20.15	19.88	19.84
		25	12	19.89	20.50	20.47
		25	25	19.91	19.76	19.61
		50	0	20.65	20.41	20.25

Band/BW	Modulation	RB Size	RB Offset	Low CH 20025	Mid CH 20175	High CH 20325
				Frequency 1717.5 MHz	Frequency 1732.5 MHz	Frequency 1747.5 MHz
4/15	QPSK	1	0	23.04	22.72	**23.51**
		1	37	23.00	23.43	22.67
		1	74	23.23	23.34	23.09
		36	0	22.15	22.07	22.47
		36	19	22.50	22.29	22.13
		36	39	22.51	21.86	22.05
		75	0	22.06	22.46	21.86
	16QAM	1	0	22.10	**22.67**	22.09
		1	37	21.87	21.88	22.57
		1	74	22.35	21.77	22.28
		36	0	21.10	21.48	20.79
		36	19	21.17	21.03	21.72
		36	39	21.40	21.59	21.52
		75	0	21.48	21.39	20.88
	64QAM	1	0	20.79	20.71	20.64
		1	37	21.40	20.91	21.29
		1	74	21.63	20.52	21.19
		36	0	19.80	20.16	19.98
		36	19	20.16	19.86	19.61
		36	39	20.02	20.20	20.30
		75	0	20.06	20.61	20.41

Band/BW	Modulation	RB Size	RB Offset	Low CH 20050	Mid CH 20175	High CH 20300
				Frequency 1720 MHz	Frequency 1732.5 MHz	Frequency 1745 MHz
4/20	QPSK	1	0	23.57	23.57	23.05
		1	50	22.94	**23.78**	22.69
		1	99	23.62	22.72	23.49
		50	0	22.47	22.56	22.25
		50	25	22.37	21.90	22.54
		50	50	22.44	22.17	22.12
		100	0	22.94	22.26	22.70
	16QAM	1	0	22.66	22.74	22.56
		1	50	22.34	22.48	22.28
		1	99	**22.89**	22.60	22.59
		50	0	21.19	21.63	21.54
		50	25	21.84	20.97	21.02
		50	50	21.62	21.31	21.12
		100	0	21.74	21.49	21.01
	64QAM	1	0	21.50	21.00	21.13
		1	50	21.69	21.26	20.99
		1	99	21.41	21.20	21.03
		50	0	19.82	20.10	20.30
		50	25	20.68	20.61	20.44
		50	50	19.94	20.13	20.02
		100	0	20.60	20.38	20.39

Band/BW	Modulation	RB Size	RB Offset	Low CH 26697	Mid CH (26915)	High CH 27033
				Frequency (824.7) MHz	Frequency (836.5)MHz	Frequency (848.3) MHz
5/1.4	QPSK	1	0	23.20	23.32	23.30
		1	2	22.69	23.28	23.04
		1	5	**23.36**	22.90	22.69
		3	0	22.72	23.23	22.79
		3	1	23.00	22.88	22.55
		3	3	22.44	22.84	22.81
		6	0	21.77	22.60	21.93
	16QAM	1	0	21.81	22.06	22.04
		1	2	21.82	21.85	22.03
		1	5	21.74	21.78	22.30
		3	0	21.74	22.18	21.61
		3	1	22.28	**22.55**	21.78
		3	3	22.15	22.44	22.11
		6	0	21.43	21.04	21.30
	64QAM	1	0	21.02	20.86	20.49
		1	2	20.60	20.57	20.40
		1	5	21.23	20.86	21.05
		3	0	21.04	21.38	20.43
		3	1	20.75	20.65	20.97
		3	3	21.29	21.21	21.14
		6	0	19.65	19.85	19.68

Band/BW	Modulation	RB Size	RB Offset	Low CH (26805)	Mid CH (26915)	High CH (27025)
				Frequency (825.5)MHz	Frequency (836.5)MHz	Frequency (847.5)MHz
5/3	QPSK	1	0	23.05	23.66	23.34
		1	7	22.96	23.14	23.45
		1	14	22.79	23.16	23.11
		8	0	23.32	22.95	22.72
		8	3	22.86	22.99	23.15
		8	7	22.96	**23.66**	23.10
		15	0	22.43	22.37	22.55
	16QAM	1	0	21.96	21.97	22.28
		1	7	21.65	**22.71**	21.98
		1	14	21.59	22.02	21.91
		8	0	21.68	22.55	21.67
		8	3	21.68	22.12	21.44
		8	7	22.09	22.44	22.34
		15	0	20.65	21.64	20.97
	64QAM	1	0	20.51	21.15	21.28
		1	7	21.12	20.81	20.66
		1	14	20.81	21.44	20.67
		8	0	20.66	21.57	20.96
		8	3	20.45	21.32	20.77
		8	7	20.63	21.50	20.64
		15	0	19.77	20.07	20.10

Band/BW	Modulation	RB Size	RB Offset	Low CH (26805)	Mid CH (26915)	High CH (27025)
				Frequency (825.5)MHz	Frequency (836.5)MHz	Frequency (847.5)MHz
5/5	QPSK	1	0	23.43	22.99	23.28
		1	12	23.58	23.22	**23.61**
		1	24	23.32	23.16	22.50
		12	0	22.63	22.91	23.58
		12	6	22.94	23.23	23.15
		12	13	22.87	22.72	23.36
		25	0	22.22	22.68	21.86
	16QAM	1	0	22.26	22.02	22.53
		1	12	22.46	22.35	22.25
		1	24	21.71	22.67	21.72
		12	0	22.24	22.17	22.58
		12	6	21.53	**22.71**	21.68
		12	13	22.36	22.40	21.85
		25	0	21.50	21.26	21.11
	64QAM	1	0	20.37	20.90	21.25
		1	12	20.97	20.81	20.62
		1	24	21.08	20.70	20.78
		12	0	21.28	20.87	20.87
		12	6	21.10	21.40	20.47
		12	13	21.01	21.63	21.12
		25	0	19.84	20.13	20.26

Band/BW	Modulation	RB Size	RB Offset	Low CH (26840)	Mid CH (26915)	High CH (26990)
				Frequency (829)MHz	Frequency (836.5)MHz	Frequency (844)MHz
5/10	QPSK	1	0	23.16	**24.04**	23.01
		1	24	23.33	23.85	23.76
		1	49	23.76	23.36	22.81
		25	0	23.16	23.83	22.95
		25	12	23.28	23.12	23.18
		25	25	23.21	23.04	23.70
		50	0	22.70	22.58	21.89
	16QAM	1	0	21.90	**22.97**	22.48
		1	24	22.32	22.37	22.46
		1	49	21.75	22.51	22.17
		25	0	21.95	22.48	21.99
		25	12	22.75	22.77	22.02
		25	25	22.01	22.76	22.18
		50	0	20.89	21.42	21.60
	64QAM	1	0	20.92	21.94	21.21
		1	24	20.62	20.91	21.64
		1	49	20.61	21.11	20.71
		25	0	21.24	21.14	20.84
		25	12	21.38	20.96	21.14
		25	25	20.77	21.10	20.99
		50	0	19.63	20.35	20.56

Band/BW	Modulation	RB Size	RB Offset	Low CH 20775	Mid CH 21100	High CH 21425
				Frequency 2502.5 MHz	Frequency 2535 MHz	Frequency 2567.5 MHz
7/5	QPSK	1	0	**22.52**	22.21	21.51
		1	12	22.18	22.08	21.83
		1	24	22.46	22.36	22.20
		12	0	21.89	21.17	20.90
		12	6	21.13	21.16	21.01
		12	13	21.58	20.65	20.50
		25	0	21.12	21.02	21.14
	16QAM	1	0	20.90	21.38	21.05
		1	12	**21.79**	20.62	20.47
		1	24	21.44	20.72	20.70
		12	0	20.37	20.35	20.25
		12	6	20.92	20.18	20.02
		12	13	19.90	20.32	19.48
		25	0	20.66	20.21	19.73
	64QAM	1	0	20.02	19.86	20.26
		1	12	20.87	19.67	19.95
		1	24	20.63	20.14	19.96
		12	0	18.97	19.08	19.25
		12	6	19.41	19.11	19.18
		12	13	19.64	18.63	19.29
		25	0	19.08	18.48	18.87

Band/BW	Modulation	RB Size	RB Offset	Low CH 20800	Mid CH 21100	High CH 21400
				Frequency 2505 MHz	Frequency 2535 MHz	Frequency 2565 MHz
7/10	QPSK	1	0	**22.73**	22.04	22.13
		1	24	22.24	22.09	21.50
		1	49	22.43	21.82	21.73
		25	0	21.89	21.44	21.13
		25	12	21.95	20.91	20.51
		25	25	21.87	20.75	20.75
		50	0	21.67	20.82	20.82
	16QAM	1	0	21.26	20.61	21.21
		1	24	21.19	21.01	**21.37**
		1	49	21.24	20.78	21.22
		25	0	20.26	20.21	20.35
		25	12	20.78	20.54	20.27
		25	25	19.91	20.12	19.99
		50	0	19.93	19.81	19.96
	64QAM	1	0	19.99	20.25	19.81
		1	24	20.25	20.53	19.33
		1	49	20.30	19.81	19.91
		25	0	18.84	19.24	19.28
		25	12	19.60	19.13	18.91
		25	25	19.22	18.56	18.41
		50	0	18.86	18.99	18.57

Band/BW	Modulation	RB Size	RB Offset	Low CH 20825	Mid CH 21100	High CH 21375
				Frequency 2507.5 MHz	Frequency 2535 MHz	Frequency 2562.5 MHz
7/15	QPSK	1	0	21.81	22.53	21.36
		1	37	22.38	22.46	21.45
		1	74	**22.64**	22.56	21.28
		36	0	21.78	21.44	20.34
		36	19	21.36	21.09	20.51
		36	39	21.13	20.56	20.88
		75	0	21.33	21.44	20.69
	16QAM	1	0	21.13	20.74	21.18
		1	37	20.89	20.62	20.65
		1	74	**21.60**	20.82	20.77
		36	0	20.85	20.41	19.72
		36	19	20.63	20.07	20.48
		36	39	20.63	20.17	19.84
		75	0	20.63	20.48	20.13
	64QAM	1	0	20.02	20.39	19.40
		1	37	20.48	20.36	19.46
		1	74	20.04	19.75	20.01
		36	0	19.38	19.27	18.90
		36	19	19.45	19.14	18.83
		36	39	19.62	19.08	18.89
		75	0	19.47	18.60	18.36

Band/BW	Modulation	RB Size	RB Offset	Low CH 20850	Mid CH 21100	High CH 21350
				Frequency 2510 MHz	Frequency 2535 MHz	Frequency 2560 MHz
7/20	QPSK	1	0	**23.04**	22.64	22.48
		1	50	22.85	22.82	22.37
		1	99	22.59	22.65	21.96
		50	0	22.09	21.21	21.11
		50	25	21.55	21.10	20.77
		50	50	21.97	21.44	21.29
		100	0	21.30	21.29	20.80
	16QAM	1	0	21.28	21.30	21.38
		1	50	21.36	**21.75**	20.63
		1	99	21.63	21.06	20.97
		50	0	20.44	20.77	20.44
		50	25	20.99	20.19	20.25
		50	50	20.90	20.68	20.08
		100	0	20.26	20.02	20.09
	64QAM	1	0	19.96	19.95	20.21
		1	50	20.73	20.70	19.98
		1	99	20.30	19.92	19.66
		50	0	19.55	18.85	19.52
		50	25	19.22	19.13	19.15
		50	50	19.51	18.85	18.63
		100	0	19.01	19.19	19.00

Band/BW	Modulation	RB Size	RB Offset	Low CH 23017	Mid CH 23095	High CH 23173
				Frequency 699.7 MHz	Frequency 707.5 MHz	Frequency 715.3 MHz
12/1.4	QPSK	1	0	**23.90**	23.52	23.06
		1	2	23.25	23.22	23.06
		1	5	23.58	23.66	23.25
		3	0	23.30	22.94	23.19
		3	1	22.98	22.84	22.80
		3	3	23.62	23.35	22.58
		6	0	22.64	22.34	22.22
	16QAM	1	0	22.62	22.03	22.38
		1	2	22.56	22.19	21.94
		1	5	22.35	22.42	21.82
		3	0	**22.88**	22.29	22.00
		3	1	22.13	22.53	21.72
		3	3	21.94	22.00	22.43
		6	0	21.52	21.06	20.96
	64QAM	1	0	21.37	21.59	21.27
		1	2	21.74	21.52	21.14
		1	5	21.28	21.46	21.05
		3	0	21.69	21.00	21.06
		3	1	21.62	21.50	20.72
		3	3	21.56	21.61	20.53
		6	0	20.13	20.07	20.08

Band/BW	Modulation	RB Size	RB Offset	Low CH 23025	Mid CH 23095	High CH 23165
				Frequency 700.5 MHz	Frequency 707.5 MHz	Frequency 714.5 MHz
12/3	QPSK	1	0	**23.95**	23.43	23.50
		1	7	23.74	23.28	23.24
		1	14	23.48	23.16	22.79
		8	0	23.60	23.71	23.38
		8	3	22.95	23.02	22.66
		8	7	23.67	23.13	23.52
		15	0	22.92	21.92	22.54
	16QAM	1	0	**22.79**	22.11	22.43
		1	7	22.36	21.88	22.59
		1	14	22.09	21.78	21.60
		8	0	22.68	22.15	21.90
		8	3	22.62	21.82	21.89
		8	7	22.01	21.88	21.52
		15	0	21.42	21.10	20.69
	64QAM	1	0	21.78	20.77	20.93
		1	7	21.51	20.95	21.16
		1	14	21.03	21.20	20.70
		8	0	21.29	21.28	20.85
		8	3	21.00	21.25	20.77
		8	7	21.28	20.68	20.59
		15	0	20.61	20.24	19.69

Band/BW	Modulation	RB Size	RB Offset	Low CH 23035	Mid CH 23095	High CH 23155
				Frequency 701.5 MHz	Frequency 707.5 MHz	Frequency 713.5 MHz
12/5	QPSK	1	0	23.85	23.59	23.46
		1	12	23.48	23.60	23.12
		1	24	23.42	23.11	22.90
		12	0	23.11	23.48	23.52
		12	6	**23.86**	23.59	23.16
		12	13	23.03	23.30	22.91
		25	0	22.33	22.17	22.01
	16QAM	1	0	22.13	22.10	22.28
		1	12	22.04	22.33	21.63
		1	24	22.09	22.32	22.02
		12	0	22.39	**22.73**	21.75
		12	6	22.28	21.74	22.49
		12	13	22.35	22.40	21.82
		25	0	21.65	21.05	21.35
	64QAM	1	0	21.56	21.56	20.54
		1	12	21.62	20.93	20.66
		1	24	21.58	20.93	21.21
		12	0	21.65	21.50	21.41
		12	6	20.92	20.94	20.78
		12	13	21.36	21.17	21.44
		25	0	20.05	20.62	20.13

Band/BW	Modulation	RB Size	RB Offset	Low CH 23060	Mid CH 23095	High CH 23130
				Frequency 704 MHz	Frequency 707.5 MHz	Frequency 711 MHz
12/10	QPSK	1	0	24.13	23.55	23.55
		1	24	24.07	23.51	23.17
		1	49	24.06	23.26	23.33
		25	0	23.62	23.18	22.88
		25	12	23.36	23.23	23.28
		25	25	**24.18**	23.48	23.23
		50	0	22.14	22.24	22.45
	16QAM	1	0	**23.04**	22.75	22.50
		1	24	22.82	22.19	22.45
		1	49	22.83	22.39	22.01
		25	0	22.50	22.64	22.64
		25	12	22.64	22.12	22.40
		25	25	22.77	22.76	22.21
		50	0	22.02	21.71	20.82
	64QAM	1	0	21.71	21.50	21.09
		1	24	21.86	21.47	20.85
		1	49	20.98	21.04	21.63
		25	0	21.80	21.80	21.40
		25	12	21.09	21.79	21.65
		25	25	21.93	20.92	20.68
		50	0	20.89	20.23	19.76

Band/BW	Modulation	RB Size	RB Offset	Low CH 23205	Mid CH 23230	High CH 23255
				Frequency 779.5 MHz	Frequency 782.0 MHz	Frequency 784.5 MHz
13/5	QPSK	1	0	22.77	23.11	22.68
		1	12	22.75	**23.79**	22.21
		1	24	23.06	23.38	22.33
		12	0	21.84	22.41	20.84
		12	6	22.31	23.09	21.44
		12	13	22.11	22.43	21.52
		25	0	21.54	22.38	21.30
	16QAM	1	0	21.42	**22.95**	21.67
		1	12	21.82	22.89	21.63
		1	24	22.34	22.92	21.15
		12	0	20.45	21.39	19.97
		12	6	20.89	22.12	19.93
		12	13	20.37	21.93	20.02
		25	0	21.41	21.40	20.30
	64QAM	1	0	20.94	22.11	20.65
		1	12	21.26	21.78	19.72
		1	24	21.13	21.53	19.57
		12	0	20.06	20.31	19.12
		12	6	19.82	20.47	18.97
		12	13	19.65	20.52	19.13
		25	0	19.58	20.58	19.75

Band/BW	Modulation	RB Size	RB Offset	/	Mid CH 23230	/
				/	Frequency 782.0 MHz	/
13/10	QPSK	1	0	/	**24.17**	/
		1	24	/	24.00	/
		1	49	/	23.78	/
		25	0	/	22.71	/
		25	12	/	22.80	/
		25	25	/	22.90	/
		50	0	/	23.15	/
	16QAM	1	0	/	22.48	/
		1	24	/	**22.90**	/
		1	49	/	22.86	/
		25	0	/	21.70	/
		25	12	/	22.13	/
		25	25	/	22.16	/
		50	0	/	21.55	/
	64QAM	1	0	/	21.95	/
		1	24	/	21.51	/
		1	49	/	21.50	/
		25	0	/	20.29	/
		25	12	/	20.60	/
		25	25	/	20.28	/
		50	0	/	20.63	/

Band/BW	Modulation	RB Size	RB Offset	Low CH 26697	Mid CH 26865	High CH 27033
				Frequency 814.7 MHz	Frequency 831.5 MHz	Frequency 848.3 MHz
26/1.4	QPSK	1	0	23.23	23.26	23.44
		1	2	22.93	**23.99**	23.43
		1	5	22.99	23.13	23.49
		3	0	23.40	23.05	23.37
		3	1	22.97	23.66	23.54
		3	3	23.75	23.90	23.56
		6	0	22.82	22.89	22.15
	16QAM	1	0	22.22	22.16	21.70
		1	2	21.98	**22.93**	21.64
		1	5	22.14	22.60	21.96
		3	0	22.80	22.84	22.24
		3	1	22.46	22.53	22.21
		3	3	22.56	22.53	21.85
		6	0	21.30	21.17	20.82
	64QAM	1	0	21.19	21.22	21.41
		1	2	21.16	21.20	21.20
		1	5	21.17	21.32	20.86
		3	0	21.39	21.38	20.83
		3	1	21.15	21.55	21.32
		3	3	20.93	21.07	21.50
		6	0	20.81	20.28	19.87

Band/BW	Modulation	RB Size	RB Offset	Channel 26705	Channel 26865	Channel 27025
				Frequency 815.5 MHz	Frequency 831.5 MHz	Frequency 847.5 MHz
26/3	QPSK	1	0	23.41	23.13	22.82
		1	7	23.81	23.66	23.23
		1	14	23.44	23.91	23.35
		8	0	23.38	23.55	22.96
		8	3	23.37	**24.08**	22.74
		8	7	23.14	23.18	23.54
		15	0	22.96	22.21	22.36
	16QAM	1	0	22.46	22.16	21.95
		1	7	22.09	22.38	22.15
		1	14	22.55	**22.94**	21.65
		8	0	22.42	22.19	22.72
		8	3	22.40	22.90	21.98
		8	7	22.48	22.89	22.10
		15	0	21.76	21.73	21.53
	64QAM	1	0	21.79	21.77	20.70
		1	7	21.56	21.66	21.36
		1	14	21.56	21.11	20.76
		8	0	20.91	21.18	20.83
		8	3	21.35	21.05	20.57
		8	7	20.76	21.78	20.85
		15	0	20.10	20.30	19.62

Band/BW	Modulation	RB Size	RB Offset	Channel 26715	Channel 26865	Channel 27015
				Frequency 816.5 MHz	Frequency 831.5 MHz	Frequency 846.5 MHz
26/5	QPSK	1	0	23.64	23.54	23.11
		1	12	23.60	23.23	22.83
		1	24	23.60	**23.97**	23.56
		12	0	23.39	22.94	22.67
		12	6	23.07	23.26	23.21
		12	13	23.65	23.13	22.73
		25	0	22.68	22.26	22.16
	16QAM	1	0	22.17	22.71	22.42
		1	12	22.33	22.22	21.83
		1	24	21.98	22.52	22.04
		12	0	22.18	22.28	22.55
		12	6	22.54	**22.95**	22.00
		12	13	22.82	22.09	21.69
		25	0	21.20	21.54	20.82
	64QAM	1	0	21.38	21.53	21.35
		1	12	21.28	21.72	21.07
		1	24	21.11	21.38	21.24
		12	0	20.73	21.71	21.14
		12	6	21.55	21.40	20.91
		12	13	21.34	20.86	21.19
		25	0	20.03	19.91	19.70

Band/BW	Modulation	RB Size	RB Offset	Channel 26740	Channel 26865	Channel 26990
				Frequency 819 MHz	Frequency 831.5 MHz	Frequency 844 MHz
26/10	QPSK	1	0	23.20	23.32	23.15
		1	24	23.20	**23.97**	23.72
		1	49	23.39	23.47	23.41
		25	0	23.28	23.96	23.48
		25	12	23.94	23.49	23.73
		25	25	23.04	23.51	23.74
		50	0	22.35	23.10	22.46
	16QAM	1	0	21.95	22.36	22.09
		1	24	22.78	22.49	21.90
		1	49	22.09	22.71	22.09
		25	0	22.45	22.46	22.31
		25	12	**22.84**	22.40	22.68
		25	25	22.28	22.25	22.37
		50	0	21.67	21.57	21.33
	64QAM	1	0	21.53	21.24	21.24
		1	24	21.36	21.24	20.95
		1	49	21.18	21.81	21.29
		25	0	21.76	21.43	21.42
		25	12	21.39	21.26	21.25
		25	25	21.62	21.30	21.63
		50	0	20.88	20.19	19.73

Band/BW	Modulation	RB Size	RB Offset	Channel 26765	Channel 26865	Channel 26965
				Frequency 821.5 MHz	Frequency 831.5 MHz	Frequency 841.5 MHz
26/15	QPSK	1	0	23.69	23.51	23.54
		1	24	**24.14**	23.90	23.36
		1	49	23.43	23.39	23.32
		25	0	23.58	24.12	22.85
		25	12	23.07	23.52	23.88
		25	25	23.94	23.33	23.48
		50	0	22.29	22.86	22.20
	16QAM	1	0	22.58	22.60	22.09
		1	24	22.53	23.14	22.22
		1	49	22.41	22.79	22.13
		25	0	22.43	22.24	22.64
		25	12	22.44	**23.23**	22.79
		25	25	22.93	23.19	22.10
		50	0	21.61	21.89	21.00
	64QAM	1	0	21.27	21.29	20.84
		1	24	21.98	21.62	20.77
		1	49	21.20	22.00	21.28
		25	0	21.20	21.33	21.58
		25	12	21.37	21.65	20.95
		25	25	21.60	21.95	21.49
		50	0	20.21	21.01	20.14

Band/BW	Modulation	RB Size	RB Offset	Low CH (39675)	Mid CH (40620)	High CH (41565)
				Frequency (2498.5)MHz	Frequency (2593)MHz	Frequency (2687.5)MHz
41/5	QPSK	1	0	21.83	22.02	22.16
		1	12	**22.45**	21.64	21.40
		1	24	21.74	22.01	22.00
		12	0	20.70	21.53	21.14
		12	6	21.13	20.99	20.95
		12	13	20.69	21.32	20.66
		25	0	21.07	20.81	20.66
	16QAM	1	0	20.49	20.96	20.71
		1	12	20.63	21.15	**21.16**
		1	24	20.54	21.07	20.25
		12	0	19.82	19.72	20.33
		12	6	19.50	19.70	20.11
		12	13	19.54	19.73	19.68
		25	0	19.72	20.50	19.69
	64QAM	1	0	19.52	19.84	19.60
		1	12	19.86	20.15	19.84
		1	24	19.38	20.24	19.71
		12	0	19.14	18.85	18.35
		12	6	18.41	19.19	18.93
		12	13	18.73	18.72	18.88
		25	0	18.71	19.46	18.30

Band/BW	Modulation	RB Size	RB Offset	Low CH (39700)	Mid CH (40620)	High CH (41540)
				Frequency (2501)MHz	Frequency (2593)MHz	Frequency (2685)MHz
41/10	QPSK	1	0	21.99	21.93	21.82
		1	24	21.86	22.01	**22.17**
		1	49	21.44	21.79	21.17
		25	0	20.97	21.45	21.02
		25	12	21.01	21.00	20.89
		25	25	20.45	21.43	21.15
		50	0	21.33	21.64	20.23
	16QAM	1	0	20.59	20.76	20.90
		1	24	**21.36**	20.87	20.95
		1	49	20.54	20.96	20.20
		25	0	20.28	20.67	19.84
		25	12	19.61	19.97	20.01
		25	25	19.75	19.95	19.62
		50	0	19.96	19.84	19.96
	64QAM	1	0	19.99	20.11	19.25
		1	24	19.71	20.47	20.05
		1	49	19.76	20.26	19.28
		25	0	19.24	19.22	19.05
		25	12	18.55	19.54	18.87
		25	25	18.95	18.77	18.55
		50	0	18.70	18.90	18.32

Band/BW	Modulation	RB Size	RB Offset	Low CH (39725)	Mid CH (40620)	High CH (41515)
				Frequency (2503.5)MHz	Frequency (2593)MHz	Frequency (2682.5)MHz
41/15	QPSK	1	0	22.24	21.93	22.08
		1	37	21.66	22.17	21.60
		1	74	22.51	**22.63**	21.85
		36	0	21.15	21.66	21.36
		36	19	20.94	21.56	20.70
		36	39	20.76	20.97	21.02
		75	0	21.04	21.19	20.71
	16QAM	1	0	20.87	**21.47**	21.10
		1	37	20.92	21.20	21.26
		1	74	21.43	21.01	21.09
		36	0	20.51	20.81	20.08
		36	19	19.73	19.77	19.77
		36	39	20.00	20.02	19.75
		75	0	19.83	20.49	19.69
	64QAM	1	0	20.12	20.09	20.23
		1	37	20.23	20.12	19.90
		1	74	20.04	20.68	19.42
		36	0	19.24	19.09	19.00
		36	19	18.84	19.45	18.41
		36	39	19.39	19.31	18.38
		75	0	19.37	19.16	18.47

Band/BW	Modulation	RB Size	RB Offset	Low CH (39750)	Mid CH (40620)	High CH (41490)
				Frequency (2506)MHz	Frequency (2593)MHz	Frequency (2680)MHz
41/20	QPSK	1	0	22.23	**22.67**	22.43
		1	50	21.79	22.28	21.52
		1	99	22.08	22.22	22.33
		50	0	20.86	21.59	21.53
		50	25	21.37	21.55	21.40
		50	50	21.25	21.51	20.69
		100	0	20.95	21.27	21.23
	16QAM	1	0	21.06	**21.85**	21.48
		1	50	21.00	21.73	20.60
		1	99	20.94	21.23	21.11
		50	0	20.29	20.39	19.64
		50	25	20.65	20.08	19.88
		50	50	20.31	20.78	20.39
		100	0	19.84	20.41	20.22
	64QAM	1	0	20.02	20.60	20.37
		1	50	19.79	20.28	19.45
		1	99	20.49	20.10	19.70
		50	0	19.47	19.31	18.67
		50	25	18.87	19.50	19.39
		50	50	19.06	19.28	19.42
		100	0	19.24	18.84	18.78

Band/BW	Modulation	RB Size	RB Offset	Low CH (131979)	Mid CH (132322)	High CH (132665)
				Frequency (1710.7)MHz	Frequency (1745)MHz	Frequency (1779.3)MHz
66/1.4	QPSK	1	0	23.31	22.90	22.62
		1	2	23.22	23.02	22.81
		1	5	**23.35**	22.88	22.79
		3	0	22.24	21.97	22.48
		3	1	22.02	21.79	21.87
		3	3	22.49	21.98	21.54
		6	0	22.10	22.67	21.71
	16QAM	1	0	22.20	22.07	22.51
		1	2	22.65	22.22	21.80
		1	5	**22.83**	22.56	22.16
		3	0	21.64	21.21	20.54
		3	1	21.28	21.92	21.10
		3	3	21.01	20.85	21.32
		6	0	21.89	20.98	21.12
	64QAM	1	0	21.48	21.62	21.17
		1	2	20.80	20.94	21.03
		1	5	20.81	21.01	21.28
		3	0	20.09	20.07	20.60
		3	1	20.17	20.11	20.27
		3	3	20.48	20.29	19.83
		6	0	19.90	20.49	20.40

Band/BW	Modulation	RB Size	RB Offset	Low CH (131987)	Mid CH (132422)	High CH (132657)
				Frequency (1711.5)MHz	Frequency (1745)MHz	Frequency (1778.5)MHz
66/3	QPSK	1	0	23.32	**23.69**	23.30
		1	7	23.34	22.90	22.87
		1	14	23.34	23.59	23.24
		8	0	22.57	22.54	22.02
		8	3	22.71	22.68	22.06
		8	7	21.86	22.05	22.40
		15	0	22.54	22.36	22.20
	16QAM	1	0	22.66	22.68	21.87
		1	7	21.96	22.56	22.14
		1	14	21.82	**22.74**	22.15
		8	0	21.11	21.03	21.37
		8	3	21.58	21.23	21.36
		8	7	21.52	20.74	21.32
		15	0	21.00	21.79	21.42
	64QAM	1	0	21.40	20.93	20.65
		1	7	21.18	20.65	20.38
		1	14	21.49	21.25	21.20
		8	0	20.83	20.05	20.38
		8	3	20.41	20.07	20.19
		8	7	20.17	19.71	20.13
		15	0	19.75	20.44	19.56

Band/BW	Modulation	RB Size	RB Offset	Low CH (131997)	Mid CH (132422)	High CH (132647)
				Frequency (1712.5)MHz	Frequency (1745)MHz	Frequency (1777.5)MHz
66/5	QPSK	1	0	23.27	**23.70**	23.26
		1	12	23.60	23.14	22.81
		1	24	23.25	23.51	22.66
		12	0	22.28	22.01	22.24
		12	6	22.99	22.77	22.54
		12	13	22.08	22.03	22.21
		25	0	22.42	22.62	21.81
	16QAM	1	0	22.63	21.95	22.01
		1	12	22.56	22.61	22.35
		1	24	22.37	**22.89**	22.10
		12	0	21.33	21.61	21.35
		12	6	21.92	21.93	21.47
		12	13	21.86	21.56	21.13
		25	0	21.73	21.80	21.15
	64QAM	1	0	21.56	21.76	21.24
		1	12	21.23	20.75	20.58
		1	24	21.94	21.24	20.53
		12	0	20.89	20.29	19.91
		12	6	20.73	19.67	20.45
		12	13	20.03	20.04	19.97
		25	0	20.22	20.33	20.09

Band/BW	Modulation	RB Size	RB Offset	Low CH (131997)	Mid CH (132422)	High CH (132647)
				Frequency (1715)MHz	Frequency (1745)MHz	Frequency (1775)MHz
66/10	QPSK	1	0	**23.61**	23.61	23.07
		1	24	23.14	23.23	22.77
		1	49	23.47	23.03	22.69
		25	0	22.65	21.95	21.72
		25	12	22.35	22.38	21.97
		25	25	22.10	22.24	22.51
		50	0	22.60	22.12	22.46
	16QAM	1	0	22.07	22.50	21.80
		1	24	22.27	22.48	22.30
		1	49	22.38	**22.90**	22.33
		25	0	21.97	21.80	20.97
		25	12	21.88	21.94	20.99
		25	25	21.35	21.78	20.95
		50	0	22.04	21.19	21.56
	64QAM	1	0	20.93	21.23	21.14
		1	24	20.99	21.44	20.51
		1	49	21.36	21.70	21.38
		25	0	20.50	20.10	19.62
		25	12	20.72	19.93	20.12
		25	25	20.00	19.99	19.56
		50	0	20.26	20.31	20.04

Band/BW	Modulation	RB Size	RB Offset	Low CH (132047)	Mid CH (132422)	High CH (132665)
				Frequency (1717.5)MHz	Frequency (1745)MHz	Frequency (1772.5)MHz
66/15	QPSK	1	0	23.84	23.52	23.20
		1	50	23.39	**23.99**	22.72
		1	99	23.22	22.94	23.17
		50	0	22.74	22.25	22.26
		50	25	22.93	22.05	22.03
		50	50	22.21	22.37	22.52
		100	0	23.03	22.25	22.64
	16QAM	1	0	22.60	22.18	22.47
		1	50	**23.01**	22.75	22.00
		1	99	22.13	22.11	22.15
		50	0	22.06	21.22	20.74
		50	25	21.92	21.29	20.92
		50	50	21.84	21.76	20.98
		100	0	21.96	22.07	21.30
	64QAM	1	0	21.59	21.49	21.02
		1	50	21.23	21.19	21.38
		1	99	21.12	21.64	20.52
		50	0	20.97	20.03	20.33
		50	25	20.14	20.26	20.09
		50	50	20.87	20.44	19.81
		100	0	20.29	20.37	19.80

Band/BW	Modulation	RB Size	RB Offset	Low CH (132072)	Mid CH (132422)	High CH (132572)
				Frequency (1720)MHz	Frequency (1745)MHz	Frequency (1770)MHz
66/20	QPSK	1	0	23.39	23.40	22.99
		1	37	23.87	23.29	22.88
		1	74	**24.15**	23.49	23.22
		36	0	22.77	22.34	22.86
		36	19	22.48	22.23	22.21
		36	39	22.25	22.44	21.83
		75	0	22.41	22.58	21.90
	16QAM	1	0	**22.91**	22.37	22.39
		1	37	22.61	22.59	21.94
		1	74	22.63	22.66	22.05
		36	0	21.94	21.70	21.76
		36	19	22.14	22.08	21.84
		36	39	21.81	21.51	21.54
		75	0	21.92	21.72	21.52
	64QAM	1	0	21.47	21.79	21.36
		1	37	21.40	21.17	21.54
		1	74	21.93	21.28	20.70
		36	0	20.76	20.57	20.04
		36	19	20.87	20.18	19.86
		36	39	20.80	20.31	20.59
		75	0	20.46	20.42	19.85

LTE Band 7_CA Maximum Average Power (dBm)								
BW(MHz)	Modulation	PCC		SCC		Lowest	Middle	Highest
20+20	QPSK	0	0	1	99	24.68	24.95	24.52
		1	99	0	0	25.22	25.24	**25.45**
		100	0	0	0	23.86	24.36	24.70
		100	0	100	0	23.58	23.44	24.11
		1	0	1	99	20.03	19.54	19.84
		1	0	1	0	20.31	20.43	20.16
		1	99	1	0	24.66	25.25	25.06
		100	0	1	99	21.30	21.58	21.72
	16QAM	0	0	1	99	24.09	23.74	24.46
		1	99	0	0	24.44	24.84	24.75
		100	0	0	0	23.41	23.88	23.25
		100	0	100	0	23.15	22.15	23.94
		1	0	1	99	20.22	20.00	20.36
		1	0	1	0	20.79	20.16	20.16
		1	99	1	0	24.46	23.83	23.71
	64QAM	0	0	1	99	21.50	21.25	21.19
		1	99	0	0	22.88	23.46	23.11
		100	0	0	0	23.46	24.13	23.26
		100	0	100	0	22.25	22.24	22.59
		1	0	1	99	21.93	21.84	20.68
		1	0	1	0	18.24	18.27	18.35
		1	99	1	0	19.20	19.47	19.28
		100	0	1	99	20.52	21.49	20.83

LTE Band 7_CA Maximum Average Power (dBm)								
BW(MHz)	Modulation	PCC		SCC		Lowest	Middle	Highest
20+15	QPSK	100	0	75	0	22.84	23.53	22.91
		1	0	1	74	19.61	19.77	19.84
		1	99	1	0	25.03	24.60	24.86
	16QAM	100	0	75	0	22.20	22.53	22.99
		1	0	1	74	19.80	20.37	19.56
		1	99	1	0	24.34	23.89	24.26
	64QAM	100	0	75	0	21.67	21.33	21.72
		1	0	1	74	18.20	18.70	18.66
		1	99	1	0	20.82	21.47	20.62
15+20	QPSK	75	0	100	0	22.74	22.52	22.59
		1	74	1	0	20.01	19.60	19.25
		1	0	1	99	24.32	24.19	**25.14**
	16QAM	75	0	100	0	22.49	22.76	22.37
		1	74	1	0	19.94	20.10	19.93
		1	0	1	99	23.89	24.67	23.83
	64QAM	75	0	100	0	21.23	21.38	21.62
		1	74	1	0	18.81	18.87	18.22
		1	0	1	99	20.43	20.56	21.09

LTE Band 7_CA Maximum Average Power (dBm)								
BW(MHz)	Modulation	PCC		SCC		Lowest	Middle	Highest
15+15	QPSK	75	0	75	0	23.04	23.12	23.03
		1	0	1	0	19.61	20.00	20.26
		1	74	1	74	**25.18**	24.45	24.75
	16QAM	75	0	75	0	23.16	22.74	22.92
		1	0	1	0	19.76	19.93	19.49
		1	74	1	74	24.08	24.84	24.27
	64QAM	75	0	75	0	21.45	21.78	21.34
		1	0	1	0	18.87	18.60	18.35
		1	74	1	74	20.92	20.53	20.86

LTE Band 7_CA Maximum Average Power (dBm)								
BW(MHz)	Modulation	PCC		SCC		Lowest	Middle	Highest
15+10	QPSK	75	0	50	0	22.98	23.18	23.40
		1	0	1	49	19.60	19.68	19.47
		1	74	1	0	**24.69**	24.16	24.13
	16QAM	75	0	50	0	22.40	22.06	22.48
		1	0	1	49	20.45	20.46	20.18
		1	74	1	0	24.14	24.03	24.16
	64QAM	75	0	50	0	21.90	21.98	21.59
		1	0	1	49	18.83	18.75	18.91
		1	74	1	0	20.71	20.89	20.82

LTE Band 7_CA Maximum Average Power (dBm)								
BW(MHz)	Modulation	PCC		SCC		Lowest	Middle	Highest
20+10	QPSK	100	0	50	0	23.56	23.09	22.57
		1	0	1	49	19.56	19.58	20.19
		1	99	1	0	24.79	**25.06**	24.49
	16QAM	100	0	50	0	22.58	22.59	22.16
		1	0	1	49	19.87	19.91	19.74
		1	99	1	0	24.23	23.98	24.20
	64QAM	100	0	50	0	21.78	21.82	21.14
		1	0	1	49	18.57	18.23	18.05
		1	99	1	0	20.45	21.15	20.50
10+20	QPSK	50	0	100	0	23.42	23.44	22.62
		1	49	1	0	19.55	19.66	19.86
		1	0	1	99	25.03	24.64	24.40
	16QAM	50	0	100	0	22.93	22.96	22.47
		1	49	1	0	19.80	19.96	19.77
		1	0	1	99	24.66	24.04	23.75
	64QAM	50	0	100	0	21.59	21.70	21.95
		1	49	1	0	19.07	18.27	18.18
		1	0	1	99	20.52	20.95	20.46

LTE Band 41_CA Maximum Average Power (dBm)								
BW(MHz)	Modulation	PCC		SCC		Lowest	Middle	Highest
20+20	QPSK	0	0	1	99	25.75	**26.00**	25.71
		1	99	0	0	25.92	25.62	25.48
		100	0	0	0	25.27	25.27	24.64
		100	0	100	0	24.06	24.01	23.96
		1	0	1	99	20.87	20.58	20.81
		1	0	1	0	21.52	21.56	21.69
		1	99	1	0	25.32	25.88	25.74
		100	0	1	99	22.00	21.72	21.74
	16QAM	0	0	1	99	25.63	25.18	25.07
		1	99	0	0	25.78	25.54	25.36
		100	0	0	0	24.34	23.58	23.99
		100	0	100	0	23.56	22.92	23.60
		1	0	1	99	20.78	20.92	21.06
		1	0	1	0	21.59	21.77	21.23
		1	99	1	0	25.65	25.99	25.29
	64QAM	0	0	1	99	22.23	22.84	22.59
		1	99	0	0	24.41	23.65	24.20
		100	0	0	0	24.51	24.74	24.81
		100	0	100	0	22.44	22.60	23.68
		1	0	1	99	22.81	22.14	22.60
		1	0	1	0	20.11	20.01	18.88
		1	99	1	0	19.72	20.34	20.21
		100	0	1	99	21.03	20.87	21.34

LTE Band 41_CA Maximum Average Power (dBm)								
BW(MHz)	Modulation	PCC		SCC		Lowest	Middle	Highest
20+15	QPSK	100	0	75	0	24.41	24.34	23.35
		1	0	1	74	21.68	21.06	20.60
		1	99	1	0	25.09	25.31	24.92
	16QAM	100	0	75	0	23.52	23.84	22.61
		1	0	1	74	21.22	21.30	20.55
		1	99	1	0	25.11	25.28	25.78
	64QAM	100	0	75	0	22.48	22.56	22.53
		1	0	1	74	19.52	19.75	19.58
		1	99	1	0	20.89	20.72	21.32
15+20	QPSK	75	0	100	0	23.39	23.98	23.25
		1	74	1	0	21.05	21.09	20.83
		1	0	1	99	24.90	24.97	25.00
	16QAM	75	0	100	0	23.32	23.22	23.07
		1	74	1	0	20.65	20.55	20.65
		1	0	1	99	25.18	**25.89**	25.77
	64QAM	75	0	100	0	22.61	22.17	22.49
		1	74	1	0	19.54	19.20	19.48
		1	0	1	99	21.14	20.83	21.48

LTE Band 41_CA Maximum Average Power (dBm)								
BW(MHz)	Modulation	PCC		SCC		Lowest	Middle	Highest
15+15	QPSK	75	0	75	0	23.86	23.98	24.04
		1	0	1	0	21.26	20.57	20.96
		1	74	1	74	25.15	25.22	24.98
	16QAM	75	0	75	0	23.40	22.89	22.84
		1	0	1	0	20.88	20.61	20.75
		1	74	1	74	**25.90**	25.74	25.16
	64QAM	75	0	75	0	22.77	22.28	22.39
		1	0	1	0	19.26	19.81	19.32
		1	74	1	74	20.67	20.72	20.89

LTE Band 41_CA Maximum Average Power (dBm)								
BW(MHz)	Modulation	PCC		SCC		Lowest	Middle	Highest
20+10	QPSK	100	0	50	0	24.21	23.80	23.26
		1	0	1	49	20.96	21.37	21.01
		1	99	1	0	**25.99**	25.19	25.60
	16QAM	100	0	50	0	22.93	23.33	23.73
		1	0	1	49	20.92	20.63	20.61
		1	99	1	0	24.95	25.81	25.01
	64QAM	100	0	50	0	22.25	23.04	22.43
		1	0	1	49	19.72	19.86	19.17
		1	99	1	0	21.09	20.81	21.58
10+20	QPSK	50	0	100	0	23.70	24.02	23.54
		1	49	1	0	21.33	21.29	20.84
		1	0	1	99	25.40	25.81	25.52
	16QAM	50	0	100	0	23.41	22.91	22.93
		1	49	1	0	20.97	20.60	20.66
		1	0	1	99	24.82	25.08	25.57
	64QAM	50	0	100	0	22.15	22.44	22.74
		1	49	1	0	19.60	19.84	19.16
		1	0	1	99	21.74	20.75	21.25

LTE Band 41_CA Maximum Average Power (dBm)								
BW(MHz)	Modulation	PCC		SCC		Lowest	Middle	Highest
15+10	QPSK	75	0	50	0	24.09	23.48	23.44
		1	0	1	49	21.16	20.75	20.70
		1	74	1	0	25.71	25.04	25.12
	16QAM	75	0	50	0	23.43	23.39	23.18
		1	0	1	49	20.65	20.72	20.89
		1	74	1	0	**25.82**	25.14	25.46
	64QAM	75	0	50	0	21.98	22.37	22.43
		1	0	1	49	19.27	19.70	19.79
		1	74	1	0	21.17	21.12	20.77

LTE Band 41_CA Maximum Average Power (dBm)								
BW(MHz)	Modulation	PCC		SCC		Lowest	Middle	Highest
20+5	QPSK	100	0	25	0	24.38	23.57	23.95
		1	0	1	24	21.30	20.68	21.47
		1	99	1	0	25.38	25.08	25.13
	16QAM	100	0	25	0	22.81	23.06	23.08
		1	0	1	24	20.99	20.65	20.71
		1	99	1	0	26.01	25.03	**26.03**
	64QAM	100	0	25	0	22.86	22.53	21.95
		1	0	1	24	19.37	19.75	19.30
		1	99	1	0	20.69	21.41	20.92
5+20	QPSK	25	0	100	0	23.60	23.65	23.48
		1	24	1	0	21.30	20.70	21.39
		1	0	1	99	25.11	24.96	24.87
	16QAM	25	0	100	0	22.94	22.95	23.39
		1	24	1	0	20.91	20.50	21.24
		1	0	1	99	25.01	25.34	24.91
	64QAM	25	0	100	0	22.13	21.93	22.60
		1	24	1	0	19.69	19.46	19.31
		1	0	1	99	21.35	21.52	21.22

8.3 MODULATION CHARACTERISTICS

8.3.1 Conformance Limit

No specific modulation characteristics requirement limits.

8.3.2 Test Configuration

Test according to clause 7.1 radio frequency test setup 1

8.3.3 Test Procedure

Connect the EUT to Universal Radio Communication Tester CMU200 or CMU500 via the antenna connector. A call is set up by the SS according to the generic call set up procedure on a channel with ARFCN in the Mid ARFCN range, power control level set to Max power. MS TXPWR_MAX_CCH is set to the maximum value supported by the Power Class of the Mobile under test,The frequency band is set as selected frequency, test method was according to 3GPP TS 51.010 and 3GPP TS 34.121. and 3GPP2 C.S0011/TIA-98-E for 1XRTT.and 3GPP2 C.S0033-0/tia-866 for Rel.0 and 3GPP2 C.S0033-A for Rev.A The waveform quality and constellation of the was tested.

8.3.4 Test Results

Pass

8.4 OCCUPIED BANDWIDTH

8.4.1 Conformance Limit

No specific modulation characteristics requirement limits.

8.4.2 Test Configuration

Test according to clause 7.1 radio frequency test setup 1

8.4.3 Test Procedure

Connect the EUT to Universal Radio Communication Tester CMU200 or CMU500 via the antenna connector. A call is set up by the SS according to the generic call set up procedure on a channel with ARFCN in the Mid ARFCN range, power control level set to Max power. MS TXPWR_MAX_CCH is set to the maximum value supported by the Power Class of the Mobile under test,

■ 99% Occupied bandwidth

The following procedure shall be used for measuring (99 %) power bandwidth

a) The spectrum analyzer center frequency is set to the nominal EUT channel center frequency. The frequency span for the spectrum analyzer shall be set wide enough to capture all modulation products including the emission skirts (i.e., two to five times the OBW).

b) The nominal IF filter bandwidth (3 dB RBW) shall be in the range of 1 to 5 % of the anticipated OBW, and the VBW shall be at least 3 times the RBW.

c) Set the reference level of the instrument as required to keep the signal from exceeding the maximum input mixer level for linear operation. In general, the peak of the spectral envelope must be at least 10log (OBW / RBW) below the reference level.

d) NOTE—Steps a) through c) may require iteration to adjust within the specified tolerances.

e) Set the detection mode to peak, and the trace mode to max hold..

f) Use the 99 % power bandwidth function of the spectrum analyzer (if available) and report the measured bandwidth.

g) If the instrument does not have a 99 % power bandwidth function, the trace data points are to be recovered and directly summed in linear power terms. The recovered amplitude data points, beginning at the lowest frequency, are placed in a running sum until 0.5 % of the total is reached; that frequency is recorded as the lower frequency. The process is repeated until 99.5 % of the total is reached; that frequency is recorded as the upper frequency. The 99 % power bandwidth is the difference between these two frequencies.

h) The OBW shall be reported by providing plot(s) of the measuring instrument display. The frequency and amplitude axes and scale shall be clearly labeled. Tabular data may be reported in addition to the plot(s).

■ 26 dB Occupied bandwidth

The reference value is the highest level of the spectral envelope of the modulated signal.

a) The spectrum analyzer center frequency is set to the nominal EUT channel center frequency. The span range for the spectrum analyzer shall be between two and five times the anticipated OBW.

b) The nominal resolution bandwidth (RBW) shall be in the range of 1 to 5 % of the anticipated OBW, and the VBW shall be at least 3 times the RBW.

c) Set the reference level of the instrument as required to prevent the signal from exceeding the maximum input mixer level for linear operation. In general, the peak of the spectral envelope must be at least 10log (OBW / RBW) below the reference level.

d) NOTE—Steps a) through c) may require iteration to adjust within the specified tolerances.

e) The dynamic range of the spectrum analyzer at the selected RBW shall be at least 10 dB below the target “-X dB down” requirement (i.e., if the requirement calls for measuring the –26 dB OBW, the spectrum analyzer noise floor at the selected RBW shall be at least 36 dB below the reference value).

f) Set the detection mode to peak, and the trace mode to max hold.

g) Determine the reference value: Set the EUT to transmit a modulated signal. Allow the trace to stabilize. Set the spectrum analyzer marker to the highest level of the displayed trace (this is the reference value).

h) Determine the “-X dB down amplitude” as equal to (Reference Value – X). Alternatively, this calculation can be performed by the analyzer by using the marker-delta function.

i) Place two markers, one at the lowest and the other at the highest frequency of the envelope of the spectral display such that each marker is at or slightly below the "–X dB down amplitude" determined in step g). If a marker is below this "-X dB down amplitude" value it shall be placed as close as possible to this value. The OBW is the positive frequency difference between the two markers.
j) The occupied bandwidth shall be reported by providing plot(s) of the measuring instrument display. The frequency and amplitude axes and scale shall be clearly labeled. Tabular data may be reported in addition to the plot(s)

8.4.4 Test Results

Pass

Note:
The data of LTE Band 7_CA and LTE Band 41_CA are recorded as below. And the other data please see Appendix 4G BAND2, BAND4, BAND5, BAND7, BAND12, BAND13, BAND26, BAND66, BAND41.

LTE Band 7_CA								
BW (MHz)	Mid Channel Frequency (MHz)		QPSK		16QAM		64QAM	
	PCC	SCC	Occupied Bandwidth (KHz)	Emission Bandwidth (KHz)	Occupied Bandwidth (KHz)	Emission Bandwidth (KHz)	Occupied Bandwidth (KHz)	Emission Bandwidth (KHz)
20+20	2525.1	2544.9	37606	39890	37628	39940	37627	39900
20+15	2527.6	2544.7	32854	35060	32824	35010	32858	35010
15+20	2525.3	2542.4	32801	34970	32724	34930	32688	34950
15+15	2527.5	2542.5	28522	30670	28554	30650	28558	30650
15+10	2530.1	2542.1	23500	25560	23487	25470	23481	25410
20+10	2530.1	2544.5	28077	30140	28047	30100	28045	30100
10+20	2525.6	2540.0	27993	29950	27916	29910	27909	29880

LTE Band 41_CA								
BW (MHz)	Mid Channel Frequency (MHz)		QPSK		16QAM		64QAM	
	PCC	SCC	Occupied Bandwidth (KHz)	Emission Bandwidth (KHz)	Occupied Bandwidth (KHz)	Emission Bandwidth (KHz)	Occupied Bandwidth (KHz)	Emission Bandwidth (KHz)
20+20	2583.1	2602.9	37607	39840	37498	39760	37588	39840
20+15	2585.6	2602.7	32768	35000	32798	34880	32794	34940
15+20	2583.3	2600.4	32788	34910	32663	34890	32672	34830
15+15	2585.5	2600.5	28419	30550	28475	30500	28409	30540
20+10	2588.1	2602.5	28029	30080	28015	30020	28008	29970
10+20	2583.6	2598.0	27843	29870	27840	29910	27821	29840
15+10	2588.1	2600.1	23431	25340	23464	25360	23440	23280
10+15	2585.9	2597.9	23467	25340	23372	25220	23360	25260
20+5	2590.5	2602.2	23306	25240	23309	25240	23334	25210
5+20	2583.8	2595.5	23186	24880	23109	24860	23155	24810