Development Kit for Handspring™ Handheld Computers

Release 1.0

handspring

Information herein is preliminary and subject to change without notice.

Copyright © 1999 by Handspring, Inc. All rights reserved.

TRADEMARK ACKNOWLEDGMENT

Handspring, Visor, and Springboard are trademarks of Handspring, Inc.
All other trademarks are the properties of their respective owners.

Document number: 80-0004-00

Handspring, Inc.

189 Bernardo Ave.

Mountain View, CA 94043-5203

TEL: (650) 230-5000

FAX: (650) 230-2100

www.handspring.com

Copyright © 1999 by Handspring, Inc. All rights reserved.

Table of contents

Section I Introduction

Chapter 1 Application Development for a Handspring Handheld Computer I-3

Chapter 2 Application development for a Handspring Springboard module I-4

2.1 Springboard memory-based module software development I-4
2.2 Specialized Springboard module hardware and software design I-5

Section II Springboard expansion slot

Chapter 1 Application development to support plug & play II-2

1.1 Generic Applications II-3
1.2 Special-Purpose Applications II-3

Chapter 2 Module design details II-5

2.1 Memory Space II-5
2.2 Module access time and wait state II-6
2.3 Interrupts II-6
2.4 Interrupt Latency II-7
2.5 Reset II-7
2.6 Power Management II-7
2.7 Power Management Options for Interrupt Handlers II-8
2.8 Module Insertion Notification II-9
2.9 Catching Module Removals II-10

Chapter 3 Springboard Software Integration II-12

3.1 Module setup application II-12
3.2 Overriding Module Software II-15
3.3 Module welcome application II-16
3.4 Interrupt Handler Interaction II-16

Chapter 4 Software API Extension II-18

4.1 Checking Presence and Version of Handspring Extensions II-18
4.2 Utility Calls II-19
4.3 Generic Module Support in PalmOS II-19
4.4 Copy Protecting Module Applications II-20
4.5 API Calls II-21
4.5.1 HsAppEventHandlerSet II-22
4.5.2 HsAppEventPost II-23
4.5.3 HsCardAttrGet II-24
4.5.4 HsCardAttrSet II-26
4.5.5 HsCardErrTry/HsCardErrCatch II-27
4.5.6 HsCardEventPost II-29
4.5.7 HsCardPatchInstall II-30
4.5.8 HsCardPatchPrevProc II-32
4.5.9 HsCardPatchRemove II-33
4.5.10 HsDatabaseCopy II-34
4.5.11 HsEvtResetAutoOffTimer II-36

Copyright © 1999 by Handspring, Inc. All rights reserved.

Chapter 5 External Interface **II-37**
5.1 Pinout II-39
5.2 Signal Descriptions II-40

Chapter 6 Electrical and mechanical specifications **II-43**
6.1 Absolute electrical maximum ratings II-43
6.2 DC electrical characteristics II-43
6.3 AC Characteristics II-44
6.4 Springboard connector insertion/extraction force ratings II-45
6.5 Springboard module base color II-46

Chapter 7 HsExt.h Header File **II-47**

Section III Cradle connector

Chapter 1 Functional Description **III-2**

Chapter 2 Signal Descriptions **III-4**

Chapter 3 Keyboard Support via Remote UI **III-6**
3.1 Remote UI Packet Description III-6
3.2 Remote UI Packet Header III-7
3.3 Remote UI Packet Body III-9
3.4 CRC Computation III-9
3.5 Remote UI Packet Example III-11

Section IV Development Tools

Section V Mechanical Information

Chapter 1 Visor handheld **V-2**

Chapter 2 Springboard module with battery **V-3**

Chapter 3 Springboard standard module **V-4**

Chapter 4 Cradle base **V-5**

Chapter 5 Cable connectors **V-6**

Section VI Compatibility Testing

Chapter 1 PalmOS Software Applications **VI-2**

Chapter 2 Springboard-Specific Software Applications **VI-3**

Chapter 3 Springboard-Specific Hardware/Software Applications **VI-4**

Section VII Handspring Licensing

Section VIII Approved Vendor List

Section IX Trademarks and Logos

Chapter 1 Overview **IX-1**

Chapter 2 Logos **IX-4**

Copyright © 1999 by Handspring, Inc. All rights reserved.

Section I Introduction

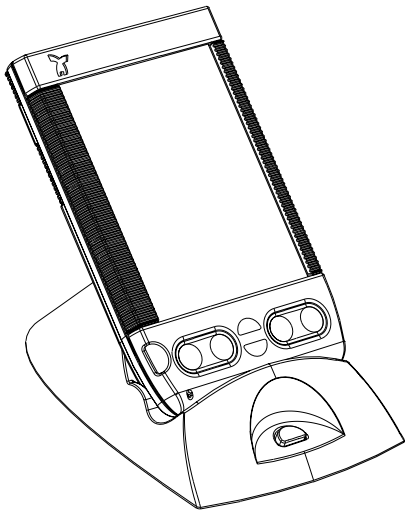

The Visor™ handheld computer is Handspring™'s first generation of PalmOS-compatible products. It is 100% compatible with existing software applications currently available for PalmOS 3.1-compatible platforms. In addition, it has a key enhancement that provides unparalleled flexibility for application and peripheral developers: the Springboard™ expansion slot.

The Springboard expansion slot supports true hot plug & play capability of removable plug-in modules for the Visor handheld. This developer's kit contains all the necessary information required by developers to manufacture Springboard-compatible modules.

This document includes the following information on the Springboard expansion slot:

- Electrical design specifications
- Software design integration information
- Handspring's PalmOS API extension definition
- Mechanical design
- Licensing information

For developers designing products that communicate with the Visor handheld via the Handspring cradle connector, this kit also contains the cradle connector's electrical and mechanical design specifications, as well as information on applicable Handspring's API extensions.

Copyright © 1999 by Handspring, Inc. All rights reserved.

Mechanical information included in this kit is in DXF, IGES, and Pro-E formats. Design files for a standard Springboard module, the Visor cradle assembly and the exterior dimensions of the Visor handheld are included.

How to Contact Handspring

Handspring's on-line developer support web site is currently under construction, therefore we are currently offering support to our developers via e-mail. If you have any technical questions regarding the contents of this package, or if you require further technical support, please contact DevSupport@handspring.com. If you have any business questions regarding this package, please go to the Developer Program section of Handspring's web site.

Copyright © 1999 by Handspring, Inc. All rights reserved.

Chapter 1 Application Development for a Handspring Handheld Computer

As previously mentioned, the Visor handheld is Handspring's first implementation of a handheld computer. It has been certified as 100% compatible with the PalmOS version 3.1. Thus any application designed for the Palm Computing Platform and running on a PalmOS 3.1-based device will run on Visor's internal memory without modification.

Developers should already be familiar with PalmOS application design before beginning development of applications for Handspring's handheld computer.

This development kit does not contain information regarding the design and implementation of standard PalmOS applications. For this information, please refer to the PalmOS SDK documentation provided by 3Com at http://www.palm.com/devzone/.

Tools for developing PalmOS applications can be purchased from Metrowerks (http://www.metrowerks.com). CodeWarrior for PalmOS is the name of Metrowerks' integrated PalmOS development package; it includes a compiler, linker, assembly-level debugger, and Palm emulator. Note that the Palm emulator in CodeWarrior does not currently support Handspring's PalmOS API extensions that support Springboard module described in this development kit.

Also provided with this kit is a complete GNU tool kit that can be used to develop applications for the Visor handheld and your Springboard or cradle module in lieu of CodeWarrior. Documentation on how to use the GNU tool kit is included when you install it on your PC.

Note that the Visor handheld ROM cannot be used with the current version of POSE (PalmOS Emulator) because of minor modifications to the hardware design such as button configuration. However, Handspring's future goal is to provide a version of POSE that will supports Visor hardware.

Also included in this developer kit is a new Desktop software that supports the Visor's USB interface. You must install this software to communicate with and download your application to the handheld. The Visor handheld supports USB for higher rates of data synchronization with a personal computer. Note that the Visor handheld cradle can be purchased in two configurations: serial or USB. USB is the standard configuration and can be used with PCs running Windows 98 or 2000, and Apple computers that have a USB connector. Serial is recommended for PCs running Windows 95 and NT, as these operating systems do not have reliable built-in USB support. Whatever cradle you use, you **must** install the Desktop software provided by Handspring.

Copyright © 1999 by Handspring, Inc. All rights reserved.

Chapter 2 Application development for a Handspring Springboard module

As mentioned in the previous chapter, software for the Visor handheld can be developed in the same way as any PalmOS-based application. When you want to transfer your application to a Springboard-compatible memory module or build a specialized module (a module with special hardware in it), you must use Handspring's new development tools.

2.1 Springboard memory-based module software development

If you are an application developer who simply wants to transfer your application to a non-volatile Springboard memory module, Handspring has set up a supplier to program multiple cards with your software. You simply need the Palm-makeROM tool as described in Section IV, "Development Tools," on page IV-1 to build a ROM image and send it to this supplier.

You can also use Handspring's available 8MB Flash Module. This module, available on our web site, is a run-time read-only memory-based module that can be re-programed using the included GNU debugger, as described in the GNU tool kit documentation. Handspring includes an application with the module that enables users to transfer any application resident in internal memory to the module memory.

Handspring is also developing an OTP (One-Time Programmable) memory module kit. You will be able to buy blank OTP memory modules from an approved vendor and program these modules yourself with your application.

Since the Springboard memory modules described above (ROM, flash & OTP) are based on read only memory (at least during run-time) and that they can be removed at any time during execution, there are some considerations to take into account when designing your application. Refer to Chapter 1, "Application development to support plug & play," on page II-2 for a more detailed description.

For information on Handspring's approved third-party suppliers, refer to Section VIII, "Approved Vendor List," on page VIII-1. This information will also be updated regularly on our developer support web site.

In addition to the application that you want to transfer to a Springboard module, you should consider adding a welcome application that is automatically launched when a Springboard module is inserted in a handheld. Refer to section 3.3, "Module welcome application," on page II-16 for a description of the welcome application.

Copyright © 1999 by Handspring, Inc. All rights reserved.

2.2 Specialized Springboard module hardware and software design

If you are building a Springboard module with special hardware, you must be familiar with the PalmOS application developement as described in the previous sections. However, you will have to use the new Handspring API standard. This API and all other necessary information to built Springboard compatible modules are explained in the next sections.

This kit also contains source code examples for Springboard module applications. They have been developed using the GNU tool kit. These examples show how to develop more sophisticated applications that install interrupt handlers or OS patches when the associated module is plugged into the Springboard expansion slot. These examples have been fully tested at Handspring and can be used as a baseline for application development.

Copyright © 1999 by Handspring, Inc. All rights reserved.

Copyright © 1999 by Handspring, Inc. All rights reserved.

Section II Springboard expansion slot

The Springboard expansion slot allows different functional modules to be inserted and removed from a handheld computer at ***any time***. To support this functionality, Handspring has made extensions to the standard PalmOS in order to enable new, specialized hardware and software that can detect the insertion of a module, load applications stored on the module, and cleanly remove them when the module is removed. This operation correctly implements plug & play for the handheld computer.

Application software that resides in a module's memory is executed in place just like applications in the device's internal ROM or RAM. It launches and executes just as fast as built-in applications. The design allows for removing a module while running an application on it. The user is automatically switched out of the module application and back to the application launcher, as necessary.

Because the Springboard expansion slot is a direct extension of the CPU's parallel bus, modules can also be designed that contain specialized hardware to address new markets not being touched by the handheld computer today (communication, entertainment, professional, etc.).

This section describes the Springboard expansion slot. It provides you with the information necessary to:

- Implement "application-only" products on a Springboard compatible memory module
- Design Springboard compatible modules and the applications to support them.

If you need information to develop application running on the handheld internal memory, please refer to Chapter 1, "Application Development for a Handspring Handheld Computer," on page I-3 of this document.

Copyright © 1999 by Handspring, Inc. All rights reserved.

Chapter 1 Application development to support plug & play

The Handspring expansion slot supports true hot plug & play of removable modules. You can insert or remove a module at any time, regardless of the current state of the machine and regardless of which applications are currently running. When a module is inserted, any software resident on the module is immediately available to you, and, in some cases, is automatically executed as well. A module's ROM can contain any number of applications. To enable this automatically, all modules must have code that contains module identification information. This information is in the module header; it must be generated by the Palm-makeROM utility described in Section IV, "Development Tools.".

Modules can also be built with custom hardware and applications that use Handspring's API. For this custom purpose, a *module driver* or *control application* is needed on the module itself so that the driver or application is loaded into the handheld's internal memory and is used to control the custom hardware. Typically the custom design includes a setup application, which is responsible for installing and removing the system extensions required to use the module. To install system extensions or shared libraries (presumably needed by some special hardware on the module), Handspring provides a mechanism for specifying a Module setup application. If it is present when the module is inserted, the setup application is executed. When the module is removed, the setup application is re-executed to handle removal of the module's software; the utility is then deleted from the handheld's internal memory.

If desired, the module manufacturer can also designate one of the applications in the ROM as a Module welcome application, which is automatically launched whenever the module is inserted.

Hot plug & play support works with most pre-existing PalmOS applications without any modification to them. We call these Generic Applications. In general, these applications do not patch any system trap calls, install shared libraries or interrupt handlers, or create background threads. The vast majority of existing PalmOS applications fall into this category. If a generic application is running on or using a module when it is removed, the system transparently and cleanly switches the user back to the applications launcher.

Non-generic applications and system extensions are those that either enhance or change system functionality, or interface with special hardware. We will define these applications as Special-Purpose Applications. These applications cannot support true hot plug & play unless the module contains a Module setup application. Without a setup application, the system is forced to soft-reset the device when the module is removed. The Special-Purpose Applications section below describes how to design these types of applications and modules so that they are fully compatible with hot insertion and removal.

Copyright © 1999 by Handspring, Inc. All rights reserved.

1.1 Generic Applications

Generic PalmOS applications that are placed onto a memory module, such as the 8MB Flash Module, are supported by hot plug & play without modifications. Depending on the application, there are some rare instances where the application might get “confused” when it is relaunched after a module is pulled out and re-inserted. Designing an application to avoid this possible problem is straightforward. The following precautions are good design practices and ensure that an application can be successfully relaunched after any soft reset (which can occur any time a user presses the soft reset button).

There are two problem areas to consider when designing your application:

1. When the current application is executing out of module memory, or
2. When the current application is using the module memory when it is removed.

In these instances, the operating system is forced to abort the application and clean up any resources in use by the application. It does that by closing all databases that are still open. Normally a problem is not presented unless the application was in the middle of writing out changes to a database it owns. If the module is pulled out during this time, the application's database could be left in a partially updated state, which might cause the application to be confused or even crash the next time it executes and re-uses that database again. This window of vulnerability is very small in most applications; it typically occurs only after dismissing a dialog or choosing a menu item (to create or delete a new record, for example). It is unlikely, although possible, that a user would pull a module out during this period of time.

For an application to protect itself from this potential problem, it must perform some simple checks whenever it re-opens a database it owns. For example, the application could set a valid bit in a record as the last step in updating the record. If the valid bit is not set when re-reading the record, the record can be automatically fixed or simply deleted. This process also ensures that the application can survive any soft reset as well.

1.2 Special-Purpose Applications

As mentioned above, products that extend system functionality by installing system patches or shared libraries that hook into interrupt handlers or create background threads should not be placed on a removable module unless it includes a Module setup application. If there is no setup application, the system is forced into a soft reset when the module is removed.

Typically software of this nature is placed on a module in order to provide access to special hardware on it. To support hot insertion and removal, the module’s ROM must provide a Module setup application. The system looks for this utility when the module is installed and automatically copies it into the built-in RAM of the device. The system calls the utility with an `install` message. The setup application can then install interrupt handlers, system patches, shared libraries, background threads, or whatever else is required in order to support the module and its hardware. All of the code to support these system extensions must either be present in the setup application or initially copied into built-in RAM by the setup application before being installed into the system. When a module is removed, the system calls the setup application again with a `remove` message, giving the setup application the opportunity to remove all hooks it had previously placed into the system. Note that this function call happens *after* the module is removed, because it is the actual removal that interrupts the OS, which in turn calls the setup

Copyright © 1999 by Handspring, Inc. All rights reserved.

function. The module has tipically been removed when the setup application is called, so it must not be used to set the module's hardware in a certain mode. If this operation is needed, the module must do this operation itself. After the setup application completes the remove operation, the system deletes the utility from the handheld built-in memory.

The system patches, extensions, interrupt handlers, libraries, etc. that are installed by a setup application often need to access special hardware devices on the module itself, install and process interrupts, handle power management, etc. To support these functions, Handspring provides API calls (described in "API Calls" on page II-21) for querying and changing various attributes of the module hardware and its interface to the Springboard expansion slot. In addition to these configuration API calls, Handspring provides other calls that ensure that system extension code can gracefully detect and recover from a module removal at any time. These calls are more fully described in "Catching Module Removals" on page II-10.

Copyright © 1999 by Handspring, Inc. All rights reserved.

Chapter 2 Module design details

This chapter describes hardware aspects regarding memory space, interrupts, reset, power management, and insertion and removal of the modules. It also references the various Module Support API calls provided for interfacing to the module hardware; these calls are described in "API Calls" on page II-21.

2.1 Memory Space

Figure II.1 shows the memory map for the modules. In Handpsring's first product, the Visor's handheld, 32 MB of address space is reserved for the Springboard expansion slot. The base address and size may change in future releases, you should use the hsCardAttrCsBase attribute of the HsAppEventHandlerSet() call to obtain this information dynamically at run-time in order to ensure that your module software remains compatible with future revisions of the base unit and/ or system software. The beginning of the module ROM is expected to be at this base address.

Two chip select lines, called CS0* and CS1* (* means an active low signal), are output to the Springboard module. By default, when a new module is inserted, the system assigns 16 MB of address space to each chip select. The address space for CS0* is referred to as csSlot0; the address space for CS1* is referred to as csSlot1; so csSlot1 starts at csSlot0 + 16 MB.

Figure II.1: Module Memory Map

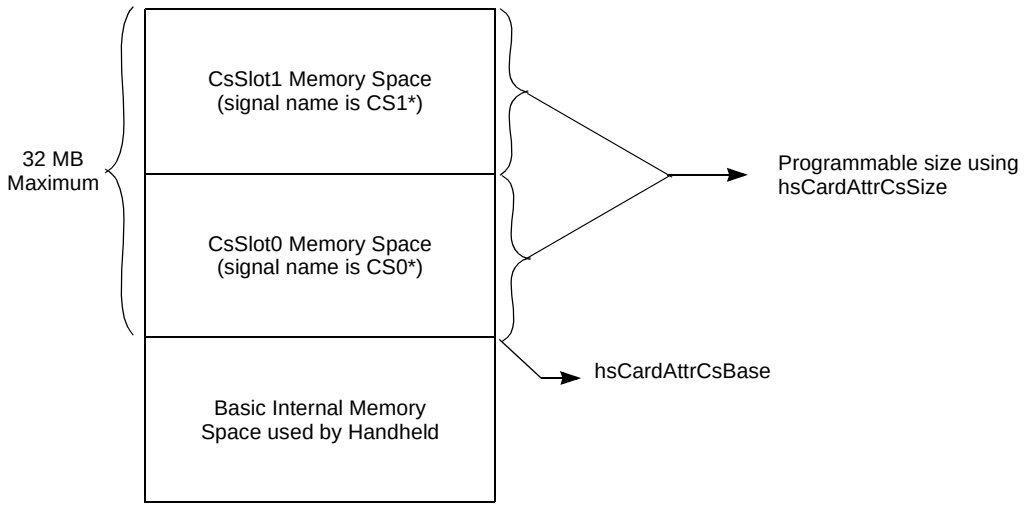

Each chip select is configured to address 16-bit wide memory devices. The ROM in the module must reside at the beginning of csSlot0 and must be 16 bits wide in order for the system to recognize the module. The system makes no assumptions about what resides at csSlot1.

Copyright © 1999 by Handspring, Inc. All rights reserved.

You can use the HsAppEventHandlerSet() and HsCardAttrSet() calls to query or change the csSlot0 and csSlot1 address ranges via the hsCardAttrCsSize attribute. The ranges can be set to any power of two between 128 KB and 16 MB, but both ranges must be set to the same size. csSlot1 always starts immediately after the csSlot0 range. If, for example, csSlot0 start at address 0x2800 0000 and you change the size of the chip select address ranges to 1 megabytes, then csSlot1 starts at address 0x2810 0000 and continues up to address 0x281F FFFF.

2.2 Module access time and wait state

When a module is first inserted, the system accesses the ROM at csSlot0 with the maximum number of wait states allowed by the base unit hardware. On the Visor handheld, this value is six wait states of the Dragonball EZ processor running at ~16.58 MHz, requiring a ROM with a maximum access time of 430 ns (setup time + 6 wait state = 70 + (6 * 60)). Once the system validates the ROM header, it reads a value out of the ROM header that indicates the actual required access time of the module in nanoseconds and re-programs the number of wait states accordingly. The Palm-MakeROM tool places this value into the ROM header (see -tokStr <id> <value> on page IV-2). Both csSlot0 and csSlot1 must have the same number of wait states (a limitation imposed by the processor itself), so you must set this value to the worst case access time of your ROM and whatever other hardware is present on your module. The hsCardAttrAccessTime attribute of the HsCardAttrSet() call can also be used to change the number of wait states dynamically while the module is inserted. This method might be useful, for example, when temporarily accessing a slow device on your module.

Once the ROM has been validated, the system updates itself so that all applications and databases present on the ROM are available for access or execution by the system or by other applications. All applications in the ROM appear in the applications launcher. If there is a setup application on the module, it is copied in the handheld internal memory and is sent an `install` message. Then if the module has a Module welcome application, this application is automatically launched as well.

2.3 Interrupts

IRQ* is a dedicated interrupt line that hardware on a module can assert to interrupt the CPU. This interrupt is level sensitive and active low. The software for the module can install an interrupt handler for this interrupt using the hsCardAttrIntHandler attribute of HsCardAttrSet(). The module interrupt handler can be written in C or assembly language. It is passed a 32-bit reference parameter that you specify in the hsCardAttrCardParam attribute of HsCardAttrSet() and a boolean flag named `*sysAwakeP` that is passed by reference. Typically the 32-bit reference parameter is a pointer to the interrupt handler globals. The `*sysAwakeP` parameter usage is described below in “Interrupt Handler Interaction” on page II-16.

In general, the interrupt handler must observe a number of restrictions that all interrupt PalmOS handlers observe. It cannot allocate, free, or move memory chunks, or allocate any system resources (semaphores, timers, tasks, etc.). If asserted when the handheld is in sleep mode, this interrupt wakes it up.

The hsCardAttrIntEnable attribute can be used at any time to enable or disable module interrupts to the processor. It must be called after installing the interrupt handler for the first time.

Copyright © 1999 by Handspring, Inc. All rights reserved.

When the module is removed, the system immediately disables further module interrupts (using the hsCardAttrIntEnable attribute), and sends the `remove` message to the module's setup application. The setup application should then clear the hsCardAttrIntHandler attribute to zero to remove the interrupt handler.

2.4 Interrupt Latency

This section describes the interrupt latency times for the Visor handheld computer, which uses a DragonBall EZ processor running at 16.58 MHz. Latencies are likely to change in future products, so it is recommended that you design your module hardware and software to be tolerant of latencies that are **at least three times** the numbers published here.

Table II.1 shows three examples of interrupt latency times. The latency times were measured on an actual unit and include all exception processing and function call overhead to get to the first instruction of the module interrupt handler. The three cases include: 1) when the device is already awake, 2) the first time the interrupt handler is called after coming out of sleep mode but before the rest of the system is awake (the `*sysAwakeP` parameter is false), and 3) the second time the interrupt handler is called after coming out of sleep mode, which is after the rest of the system has awakened (the `*sysAwakeP` parameter is true).

Table II.1: Interrupt Latency Examples

Condition	Latency	Recommended Design time
Device already awake	0.047 ms	0.15 ms
Device asleep (`*sysAwakeP` == false)	1.17 ms	4 ms
Device asleep (`*sysAwakeP` == true)[1]	3.14 ms	10 ms

1. Designer should add 20 ms to the recommend design time to allow for opening the USB port as described below.

In the third case, the designer must take into account an additional 20 milliseconds if the OS needs to open the USB library. Note that this case only happens if the USB library was open when the device went to sleep. This situation is rare because most application will close the USB library before the device goes to sleep.

2.5 Reset

When a module is first inserted, an interrupt is generated to the handheld and power is slowly applied to the module. In the Visor handheld computer, the OS ensures that the reset signal (RESET*) remains asserted for at least 30 ms before releasing it. Because the Springboard module power is guaranteed to ramp up within 5 ms, there is at least 25 ms of power-on reset time for the module.

If required, the module software can manually assert and release RESET* after the module has been inserted by setting the hsCardAttrReset attribute of HsCardAttrSet().

2.6 Power Management

A module can provide software and hardware support for power management. A routine for taking the module into and out of low power mode can be installed through the hsCardAttrPwrHandler attribute. The operating system calls this routine whenever the handheld

Copyright © 1999 by Handspring, Inc. All rights reserved.

is turned on or off (that is, taken into or out of sleep mode). Parameters to the routine tell it whether to power up or down. If powering down, a second parameter indicates the reason. The reason code is either `hsCardPwrDownNormal` (a normal power down) or `hsCardPwrDownLowVoltage` (indicates that this is an emergency shut down due to low or no battery voltage). Refer to the HsExt.h Header File for more information on `hsCardPwrDownNormal` and `hsCardPwrDownLowVoltage`.

The power handler routine must observe the same restrictions as an interrupt handler because it might be called from the context of an interrupt routine, particularly when the system performs an emergency shutdown due to low battery voltage. In addition, a power handler must execute *very* quickly. When the batteries are removed, the power handler is executed using only the energy stored in the battery backup capacitor; thus it should do the minimal amount of work necessary to put the hardware into low power mode before returning. Ideally this process simply involves setting or clearing a bit in one or two hardware registers.

The base unit asserts the LOWBAT* signal on the module when the batteries fall below a certain critical threshold voltage level (approximately 1.6 V). In the Visor handheld, power to the module is removed a few milliseconds after the batteries fall below this critical threshold . When the batteries are replaced, the module is re-powered and a new initialization sequence occurs.

The handler routine is called first and puts the module into its low power state through software. However, LOWBAT* must be used to prevent the module from asserting its interrupt, IRQ*, so that the module does not attempt to wake up the device when the batteries are too low for operation.

2.7 Power Management Options for Interrupt Handlers

Various power-saving options are available to module interrupt handlers. Through return parameters and system calls that it makes, the interrupt handler can tell the system how much of the hardware to power up as a result of the interrupt and how long to stay awake before going back into sleep mode.

The `*sysAwakeP` parameter to the module interrupt handler is a boolean flag passed by reference that tells the interrupt handler how much of the system is currently awake. If the device is asleep (“off” from a user's perspective) when the module interrupt the handheld, the system calls the module interrupt handler first before it wakes up any of the remaining hardware (sound, timers, keypad, etc.) and passes false to `*sysAwakeP`. Because the rest of the system is not awake yet, the interrupt handler cannot make any system calls at this stage except for HsCardErrTry/ HsCardErrCatch. If the handler can process the interrupt at this stage, then it needs to clear the interrupt source and return. The system then immediately puts the system back into sleep mode. This procedure is the most power-efficient means of processing the interrupt because no other extra hardware is powered up, but it does limit the interrupt handler to simple memory manipulations.

If the interrupt handler is called with `*sysAwakeP` set to false but needs to make one or more system calls (such as HsCardEventPost(), SysSemaphoreSet(), etc.), then it should set `*sysAwakeP` and return without clearing the source of the interrupt. When the system sees `*sysAwakeP` set upon return of the module interrupt handler, it continues the wake-up sequence and wakes the rest of the system (except for the LCD). Once the system wake-up is completed, it

Copyright © 1999 by Handspring, Inc. All rights reserved.

calls the module interrupt handler again with `*sysAwakeP` set true. At this stage, the interrupt handler is free to make any system calls that are normally valid from interrupt handlers.

Before the interrupt handler returns from being called with `*sysAwakeP` set true, it has the additional option of telling the system whether or not to turn on the LCD and how long to stay awake before returning to sleep mode. To do this, the handler calls HsEvtResetAutoOffTimer(). If the handler does not call HsEvtResetAutoOffTimer() before exiting, the default behavior of the system is to return to sleep mode on the next call to EvtGetEvent() by the current application. Typically, this occurrence is on the order of tens or hundreds of milliseconds, depending on the current application's event loop.

The HsEvtResetAutoOffTimer() call takes two parameters: a `stayAwakeTicks` value and a `userOn` boolean for controlling the LCD. The `stayAwakeTicks` tells the system the minimum amount of time to stay awake before going back to sleep mode. This value is specified in system ticks; however, keep in mind that the system checks the timer approximately every five seconds to verify if it needs to put itself in sleep mode. Passing (-1) tells the system to stay awake for the current auto-off setting indicated in the General Preferences panel. If the interrupt handler wants the LCD to turn on, then it sets the `userOn` boolean. The interrupt handler will sets the `userOn` boolean if it has just posted an event through HsCardEventPost() that results in an alert being displayed or other user interface activity.

2.8 Module Insertion Notification

If a module is already plugged in during a device reset, *all* applications and panels on the module are sent the standard PalmOS reset action code (`sysAppLaunchCmdSystemReset`), as are all normal built-in applications and panels.

When a module is hot-inserted at run time, the system also broadcasts the reset action code, but only to applications (not panels) on the module that have the `dmHdrAttrResetAfterInstall` bit set in their database header. This behavior ensures that applications that require the reset notification are notified, but does not unnecessarily slow down the module insertion process by having to call every application and panel on a module when it is inserted.

Note that this is a slight modification of the original purpose of the `dmHdrAttrResetAfterInstall` bit in the database header. Its original purpose was to tell HotSync to soft reset the device after one or more of these “reset-after-install” applications are installed onto the device. During the reset sequence, all applications (and thus the one(s) just installed) are sent the reset action code. However, when present on a module application this bit now means that the application wants to receive the reset action code after the module is inserted. Thus the application gets the reset action code sent to it even though the system has not really gone through a soft reset. This particular behavior was chosen for maximum compatibility with most existing applications, but unfortunately a small subset of applications might be confused by it.

Copyright © 1999 by Handspring, Inc. All rights reserved.

Figure II.2: Operational Flowchart when Inserting a Module

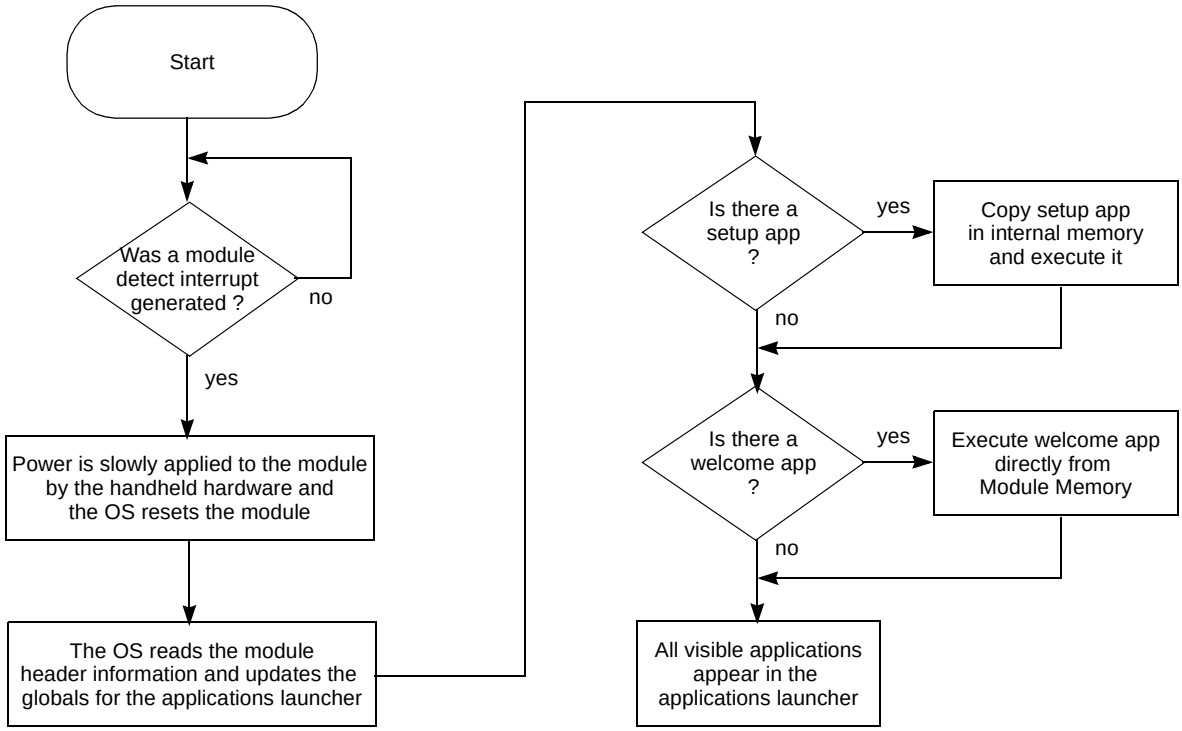

2.9 Catching Module Removals

For normal application code, the operating system simply aborts an application that is running on a module or using a module when it is removed. However, if non-application code such as an interrupt routine is accessing the module when it is removed, a bus error occurs and, by default, the system will not know how to “auto-correct” the erroneous access. Other possible problem areas are shared libraries or patches to system calls that the module has installed.

To handle these situations, Handspring provides the HsCardErrTry/HsCardErrCatch macros. These macro calls should be wrapped around any code in your interrupt routines, shared libraries, or system extensions that access memory or other hardware devices out on the module. If a module is removed when one of these sections of code is executing and a bus error occurs, the system automatically passes control to the `HsCardErrCatch` section. You can then look at various local variables that you have set up to determine the best course of action to take in dealing with the module removal. In most cases, you can simply set a flag that says the module has been removed and wait for your setup application to be called with the `remove` message. Your setup application should then uninstall all module-dependent hooks that you have placed into the system.

Copyright © 1999 by Handspring, Inc. All rights reserved.

Figure II.3: Operational Flowchart when Removing a Module

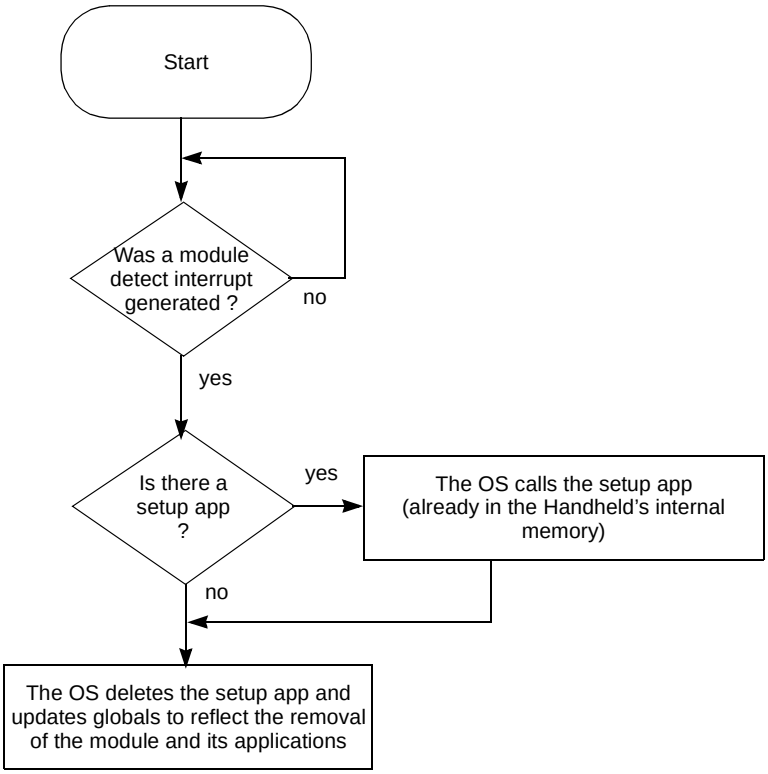

Copyright © 1999 by Handspring, Inc. All rights reserved.

Chapter 3 Springboard Software Integration

Modules that provide just additional user applications in ROM are straightforward to design and construct; modules that provide additional hardware functionality often involve interrupt handlers, shared libraries, and/or system extensions to enable other applications or system software to use the new hardware. Probably the most critical portion of the software design for a module is the operation and interaction of these various pieces with each other and the rest of the system.

For example, a pager module might have an interrupt routine that fires off whenever a page comes in. That interrupt routine might have to store the contents of the incoming page and then decide whether or not to inform the user that a message came in. If it wanted to inform the user of the message, it might simply display an alert on the screen (similar to a Datebook alarm going off) and/or cause a switch to a “Pager” application where the user can view and manage the incoming pages.

This chapter provides an overview of how interrupt routines and other system extensions can interact with the module hardware, application code, and the rest of the system. It also references some of the API calls provided for these purposes. The most important thing to remember about interrupt handlers, shared libraries, and system extensions is that their code must be copied into main memory *before* they are installed into the system. If not, the system cannot recover from a module removal situation without forcing a soft reset. They can, however, access memory or other devices on the module as long as they follow the guidelines described in “Catching Module Removals” on page II-10. The Module setup application mechanism provides a convenient method for copying these types of code into the handheld internal memory before installation.

3.1 Module setup application

Any module that provides custom hardware and software that access the hardware usually requires a module setup application. The setup application installs any system extensions, interrupt handlers, shared libraries, system trap patches, etc. that are necessary for using the new hardware. It is also responsible for undoing these installations when the module is removed.

Because the setup application is copied into the main memory before being executed, complete installation and removal of the module software is guaranteed even if the module is removed prior to or during installation. Note that the module is already removed when the setup application is called to uninstall. When a module is inserted or when the device is reset, the operating system automatically queries the module ROM to determine if there is a setup application for the module. If a setup application exists, the operating system copies it into main memory and then executes the setup application by sending it an `install` message. Likewise, when the module is removed, the system calls the same setup application, sends it a `remove` message, then deletes the setup application itself.

Copyright © 1999 by Handspring, Inc. All rights reserved.

A setup application is built just like any other PalmOS application, however, it must be given a special database creator and type to indicate that it is a module setup application and not a normal PalmOS application. See the CardSetup Sample for an example (under the `<installDir>\PalmDev\info\Tools\Sample` directory after you install the PalmTools included with this kit). A module setup application is called with one of two action codes sent to its PilotMain(): `hsSysAppLaunchCmdInstall` or `hsSysAppLaunchCmdRemove`. In both cases, the `cmdPBP` parameter block passed to the utility is a structure pointer containing the `card number` that has been inserted or removed. In this context, `card number` is the standard PalmOS `cardNo` parameter used by function like `DmCreateDatabase(UInt cardNo, ...)`. Usually the setup application saves this `card number` in its globals that it allocates during the install. Refer to the HsExt.h Header File for more information on `hsSysAppLaunchCmdInstall` and `hsSysAppLaunchCmdRemove`.

The parameter block passed during the `hsSysAppLaunchCmdInstall` action code also contains an `isReset` field. This value is true (non-zero) only if the install action code is being sent as a result of the device going through a soft or hard reset. Most setup applications can safely ignore this field because their actions are independent of whether or not the module was inserted before the reset. If the module was inserted before the reset, any shared library or other databases that the setup application normally copies to built-in RAM are already present in built-in RAM. There is no harm in copying them from the module again.

During installation and removal processing, a setup application is not allowed to use application global or static variables; all variables must be normal stack- or register-based local. This restriction is the same one that is placed on other PalmOS applications when processing other system actions codes such as `find` or `goto`. However, most module software requires globals of some kind. These globals are most likely shared by the module's interrupt handler, applications, and other extensions. The hsCardAttrCardParam attribute of the module is provided for this purpose. Use this attribute to store a 32-bit pointer to the module's globals; it can be set using HsCardAttrSet() and retrieved using HsAppEventHandlerSet(). In addition, this attribute is automatically passed to the module's interrupt handler as a parameter on the stack.

If the module setup application needs to install a shared library that is in a separate database out on the module, it must first copy the shared library database from the removable module into main memory before installing the library. Likewise it should delete the library from main memory during removal processing. The library database can be easily copied into memory using the HsDatabaseCopy() routine.

If a module setup application needs to patch any system traps, it must use the HsCardPatchInstall() routine to install them. It should *not* use SysSetTrapAddress(). Using HsCardPatchInstall() ensures that the patch can safely be removed using HsCardPatchRemove() during removal processing without interfering with other third-party extensions that may have been activated or de-activated (using an application like HackMaster) in the meantime.

If a module setup application installs an interrupt handler, event handler, or system patch from its own code segment (a subroutine linked in with the setup application itself), it must be sure to lock down its code segment before returning from the install action code. This precaution ensures that its code segment is not inadvertently moved by the PalmOS memory manager while the module is installed. The following portion of code does this operation:

Copyright © 1999 by Handspring, Inc. All rights reserved.

```
// Because we installed a patch from this code resource, make sure
// this code resource remains locked down after we exit.
VoidHand                codeResH;
codeResH = DmGet1Resource ('code', 1);
if (codeResH) MemHandleLock (codeResH);
```

Similarly, during the remove action code, the module setup application should restore the lock count of the code resource as follows:

```
// Restore lock count of code resource
VoidHand                codeResH;
codeResH = DmGet1Resource ('code', 1);
if (codeResH) MemHandleUnock (codeResH);
```

A typical module setup application allocates a memory chunk for the module's globals using `MemPtrNew()`, resets the owner of this chunk to 0 using `MemPtrSetOwner()`, and then stores the returned pointer in the hsCardAttrCardParam attribute of the module. A code example follows:

```
DWord
PilotMain (Word cmd, Ptr cmdPBP, Word launchFlags)
{
  void*                 globalsP;
  Err   err;
  VoidHand              codeResH;

  if (cmd == hsSysAppLaunchCmdInstall)
    {
      HsSysAppLaunchCmdInstallType* installP;

      installP = (HsSysAppLaunchCmdInstallType*)cmdPBP
      globalsP = MemPtrNew (sizeof (MyGlobalsType));
      if (globalsP)
        {
          MemPtrSetOwner (globalsP, 0);
          globalsP->cardNo = installP->cardNo;
          HsCardAttrSet (globalsP->cardNo, hsCardAttrCardParam,
                         &globalsP);
        }

      // Install shared libraries using SysLibInstall()
      // ...
      // Patch system traps using HsCardPatchInstall()
      // ...
      // Install interrupt handler using
      //  HsCardAttrSet(globalsP->cardNo, hsCardAttrIntHandler, ...)
      // ...
      // Enable module interrupts using
      //  HsCardAttrSet (globalsP->cardNo, hsCardAttrIntEnable, ...)
      // ...

      // Because we installed a patch from this code resource, make sure
      // this code resource remains locked down after we exit.
      codeResH = DmGet1Resource ('code', 1);
      if (codeResH) MemHandleLock (codeResH);
  }

  else if (cmd == hsSysAppLaunchCmdRemove)
    {
      HsSysAppLaunchCmdRemoveType* removeP;

      removeP = (HsSysAppLaunchCmdRemoveType*)cmdPBP
      err = HsCardAttrGet (removeP->cardNo, hsCardAttrCardParam,
                           &globalsP);
      if (!err && globalsP)
        MemPtrFree (globalsP);

      // Remove shared libraries using SysLibRemove()
      // ...
      // Restore system traps using HsCardPatchRemove()
```


Copyright © 1999 by Handspring, Inc. All rights reserved.

```
      // ...
      // Restore lock count of our code resource
      codeResH = DmGet1Resource ('code', 1);
      if (codeResH) MemHandleUnlock (codeResH);

   }

  return 0;
}
```

Another restriction placed on a module setup application is when it is called with the remove message. When this happens, it cannot display any alerts (using `FrmAlert()` or similar mechanism) or make system calls that might display UI elements or process user interface events. The remove action code can be sent to the setup application after the current application has aborted and before a new application is launched; therefore the system might not be in a state to process user interface events. The install action code, however, does not have these restrictions. It can display alerts or progress dialogs if it wishes to because it is always called from the context of the current application's main event loop.

By the time the setup application is called with the `remove` message, it can assume that the system has already done the following:

1. Disabled module interrupts by resetting the hsCardAttrIntEnable attribute to 0.
2. Removed the module interrupt handler by resetting the hsCardAttrIntHandler attribute to 0.
3. Removed the module event handler by resetting the hsCardAttrEvtHandler attribute to 0.
4. Removed the module's power handler by resetting the hsCardAttrPwrHandler attribute to 0.

3.2 Overriding Module Software

The basic principle behind Handspring's removable modules is that all of the module software and hardware resides on the module itself. In this way, a module that is inserted in any handheld is immediately functional without requiring any manual software installation or configuration. Also, most modules will be built with masked ROM in order to keep costs to a minimum. In the unfortunate event that a bug is discovered after a masked ROM module has been released, however, you might need to provide a software patch for users of your module.

By taking special precautions in the design of your setup application, you can minimize the need to design and implement a software patch for your module. For example, suppose your module copies a shared library from the module ROM to internal memory. Instead of blindly copying the shared library from the module to internal memory, your setup application should first check internal memory for a newer version of that library. If a newer version already exists in internal memory, you can skip copying the version from the module. Use the `DmGetNextDatabaseByTypeCreator()` call in these situations; it automatically searches for the latest version of a database by type and/or creator. If you find the newer version in internal memory (`card number 0`), then you can skip copying the database from the module.

Note: Always register all your database creator IDs with 3Com developer support to ensure that they are unique.

Copyright © 1999 by Handspring, Inc. All rights reserved.

3.3 Module welcome application

Whenever a module is inserted and after copying and executing the Module setup application (if present), the system looks for a welcome application on the module. This application is a normal PalmOS application with a database name of “CardWelcome.” If this application is found, the OS automatically switches to it. For example, this application could be a module-specific launcher application or an application that lets you set preferences for the module. Because it is a normal PalmOS application, it appears in the PalmOS applications launcher and can be accessed through the launcher anytime after the module has been inserted. The name that appears in the PalmOS application launcher for this welcome application can be set up in the “tAIN” resource of the welcome app—the same as for other PalmOS applications. This launcher’s visible name in the “tAIN” resource is independent of the actual database name of “CardWelcome.”

If a module is inserted during a soft or hard reset, the system does not automatically switch to the welcome application. You can, however, override this behavior and have the welcome application launched automatically during a reset. To do this, include the “HsWR” token in the module's ROM. To include this token, specify it on the command line to the Palm-MakeROM tool (`-tokStr <id> <value>`) as described in Section IV, “Development Tools,” on page IV-1.

3.4 Interrupt Handler Interaction

All interrupt handlers in the PalmOS must observe a number of restrictions. They cannot allocate, free, or move memory in any memory heap; create, modify, or delete databases; create, delete, or block system resources such timers, tasks, semaphores, etc.; or display any user interface.

About the only thing an interrupt handler can safely do is change the contents of pre-allocated, locked memory blocks, queue keyboard events, or trigger system semaphores. In addition, interrupt handlers must execute as quickly as possible in order to maximize user-responsiveness of the device and minimize the chances of adversely interfering with other interrupt response times.

One of the first tasks of any module interrupt handler is to remove the source of the interrupt. This step usually involves reading a register on the module that effectively deasserts the interrupt line. Module interrupts are level-sensitive and unless the module interrupt handler removes the source of the interrupt by the time it exits, the interrupt handler is immediately re-executed.

Next the module interrupt handler usually processes and/or stores some data regarding the interrupt. For this purpose, it usually needs a pointer to some global data containing one or more buffers and/or counters. This pointer must have been allocated in advance by application or setup code. Usually this type of buffer is allocated during initialization time using `MemPtrNew()` and is set to have an owner ID of 0 (using `MemPtrSetOwner`) to prevent the system from freeing it when the current application quits. Module interrupt handlers are passed a 32-bit parameter on the stack, which is set up through the hsCardAttrCardParam attribute of the HsCardAttrSet() call. Usually this parameter is the globals pointer for the interrupt handler.

Finally the interrupt handler may have to notify the system or an application that an event of particular interest has occurred. In particular, if an alert or similar message needs to be displayed, the interrupt handler must rely on application or system code to display it *after* the interrupt handler returns, because interrupt handlers themselves are not allowed to have any

Copyright © 1999 by Handspring, Inc. All rights reserved.

user interface. Typically the interrupt handler uses the HsAppEventPost() system routine to trigger the user interface.

Note: Refer to "Power Management Options for Interrupt Handlers" on page II-8 for important information about when it is safe to make system calls from a module interrupt handler. System calls cannot be made from a module interrupt handler if the `*sysAwakeP` parameter passed to it is false.

The interrupt handler can use the HsCardEventPost() call to post a module event. This call accepts an event number between 0 and `hsMaxCardEvent` and a 16-bit event parameter. After the interrupt handler exits and control is returned to the main event loop, the system calls the module's `CardEvtHandler()` with the given event number and 16-bit event parameter. `CardEvtHandler()` is installed through the hsCardAttrEvtHandler attribute of HsCardAttrSet(). For convenience, the `CardEvtHandler()` is also passed a copy of the same 32-bit parameter that the interrupt handler gets (the interrupt handler globals).

Because `CardEvtHandler()` executes from the context of the main event loop, it has no restrictions as far as allocating memory or making other system calls. It can put up an alert, call `SysUIAppSwitch()` to cause a switch to another application, or do anything else it desires. It is important to note that the `CardEvtHandler()` function executes in the context of (or is effectively called from) the current UI application. For this reason, the module event handler function should keep its stack usage (local variables, nested function calls, etc.) down to a minimum.

Copyright © 1999 by Handspring, Inc. All rights reserved.

Chapter 4 Software API Extension

This chapter describes in detail the calling conventions and parameters for each of the Handspring API calls.

For a description of how and where to use most of these calls, refer to Chapter 2, “Module design details,” on page II-5 and Chapter 3, “Springboard Software Integration,” on page II-12. The use of the remaining generic utility calls provided by Handspring are described in “Utility Calls” on page II-19.

The header file “`HsExt.h`” provided with this kit contains all the public equates referenced in this chapter including all constants, structure definitions, function prototypes, etc.

4.1 Checking Presence and Version of Handspring Extensions

For application code or other types of code that might be installed onto both non-Handspring PalmOS devices and Handspring devices, you must first ensure that you are on a Handspring device before making Handspring-specific API calls. Use the `FtrGet()` call of PalmOS and check for the presence of the Handspring extensions feature. The `hsFtrCreator` and `hsFtrIDVersion` constants that are passed to `FtrGet()` are defined in the Handspring header file `HsExt.h`. For example:

```
DWord                    value;
err = FtrGet (hsFtrCreator, hsFtrIDVersion, &value);
if (!err)
  {
    // Since FtrGet() did not return an error, we can
    // safely make Handspring specific API calls like
    // HsCardAttrGet(), HsCardAttrSet(), etc.
  }
```

If `FtrGet()` returns no error, then the Handspring extensions are present and it is safe to call any Handspring API call that is described in this chapter. The current version level of the Handspring extensions is returned in the `value` parameter. It is encoded as 0xMMmfsbbb, where MM is the major version number, m is the minor version number, f is the bug fix level, s is the stage (3-release, 2-beta 1-alpha, 0-development) and bbb is the build number for non-releases. For example, Version 2.00a2 would be encoded as 0x02001002, where the major version number is 02, the minor version number is 0, the bug fix level is 0, the stage is alpha, and the build number is 0x2.

Because the format used for the version number of the Handspring extensions is the same as that used for the PalmOS ROM version number, your code can use version macros such as `sysGetROMVerMajor` and `sysGetROMVerMinor` (defined in `SystemMgr.h` of the Palm Computing Platform SDK) for decoding the version number of the Handspring extensions.

Another Handspring feature provides the modification date of the Handspring extensions. This feature has an ID of `hsFtrIDModDate` (replaces `hsFtrIDVersion` in the above example). The value

Copyright © 1999 by Handspring, Inc. All rights reserved.

of this feature changes with every release of the Handspring extensions, regardless of whether or not new features were added. Thus you should use it for informative purposes only. If your software makes decisions based on a certain version or feature of the Handspring extensions in order to run, it should use the `hsFtrIDVersion` feature instead.

4.2 Utility Calls

Besides the API calls that are provided specifically for dealing with removable modules, the Handspring utility functions described in this section are not necessarily module related.

The HsDatabaseCopy() call can be used to copy a database from a module to built-in memory, vice-versa, or to duplicate an existing database within the same module. This function can be useful in module setup applications if they need to copy any databases from the module to built-in memory as part of the setup process.

The HsAppEventHandlerSet() and HsAppEventPost() calls can be used to provide more flexible event-handling mechanisms for an application. Normally when applications have their own custom event types, they must specifically look for these events in their main event loop after calling `EvtGetEvent()`. This process is not a problem in the main event loop of the application, but it can be a problem if a system event loop (such as the system “Find” dialog or “Category Edit” dialog event loops) is executing at the time the event is posted. Because the system event loop is not aware of any application-specific event types, it simply ignores them.

If the application registers its own custom event handler procedure using HsAppEventHandlerSet(), then this procedure is called automatically by the system during `SysHandleEvent()` in response to any event posted by HsAppEventPost(). This way, the application's event handler is called even if the event is posted, while the system is in one of its own custom dialog event loops.

Keep in mind that your application's event handler might be called from the context of another application's action code processing. Even though your application is the “current” application visible to the user at the time, the global CPU registers are not your application's globals due to the action code processing. Thus your application event handler routine must never rely on global variables. Instead it should use the `evtRefCon` parameter that is passed to it as a pointer to any variables it needs to access or update. This `evtRefCon` parameter value is set up by the HsAppEventHandlerSet() call.

4.3 Generic Module Support in PalmOS

Besides the calls mentioned in this chapter, the standard PalmOS memory and data manager calls for dealing with modules and memory on modules are always available. For example, `MemNumCards`() returns the number of modules that are present. It returns “2” if there is a removable module inserted and “1” otherwise. The built-in memory of the handheld base unit is accessed by passing a module number of “0” to the appropriate memory and data manager calls, whereas the removable module memory is accessed using a module number of “1.” Calls such as `MemCardInfo`() can be used to get the module name, manufacturer name, etc. for any module by passing the appropriate module number.

Remember that even if `MemNumCards`() returns a “2”, indicating that the removable module is currently installed, the user may pull the module out at any time—even immediately after this call

Copyright © 1999 by Handspring, Inc. All rights reserved.

returns. When a module is removed, the system automatically aborts any application code that is currently in the process of trying to access memory on the removable module and returns control to the application launcher. In general, application code can simply call `MemNumCards`() during its start-up and assume that the information will remain current until the application exits. If the module is pulled out while the application is using it, the system automatically and immediately aborts the application. If the application is *not* referencing the module when the module is pulled out, then the system sends it an exit event and waits for the application to exit normally. When a module is inserted, the current application is sent a normal exit event as well. It might or might not be re-launched after it exits, depending on the contents of the module (for example, it might have a welcome application on it that is launched instead).

4.4 Copy Protecting Module Applications

If desired, module applications easily can be designed so that they will not run if copied off the module to another device's internal RAM. A simple mechanism is for the application to check for the presence of the removable module and compare the module's name when it starts up. If the module is not present or the module's name is not correct, it can display an appropriate error message and refuse to run.

All removable modules will have unique module names that the module manufacturer must register with Handspring. This name is an ASCII string of up to 31 characters. To get the name of a module, use the `MemCardInfo`() call and pass in the module number of the removable module. For example:

```
char    cardName[32];
Err             err;

err = MemCardInfo (1 /*cardNo*/, cardName, 0 /*manufName*/,
        0 /*versionP*/, 0 /*crDateP*/, 0 /*romSizeP*/,
        0 /*ramSizeP*/, 0 /*freeBytesP*/);
if (err || StrCompare (cardName, "MyCardName"))
  {
    DisplayCopyProtectError();
  }
```


Copyright © 1999 by Handspring, Inc. All rights reserved.

4.5 API Calls

This section lists the Handspring API calls in alphabetical order. The calls are summarized in the table below.

Table II.1: API Call Summary

Call	Description	Page #
HsAppEventHandlerSet	Register event handler procedure	page II-22
HsAppEventPost	Enable event posting by application event handler	page II-23
HsCardAttrGet	Retrieve attribute	page II-24
HsCardAttrSet	Set attribute	page II-26
HsCardErrTry/HsCardErrCatch	Enable safe recovery for module removals	page II-27
HsCardEventPost	Queue an event	page II-29
HsCardPatchInstall	Enable patch installs	page II-30
HsCardPatchPrevProc	Get address of previous system trap implementation	page II-32
HsCardPatchRemove	Remove setup application patch	page II-33
HsDatabaseCopy	Copy PalmOS database	page II-34
HsEvtResetAutoOffTimer	Reset auto-off timer	page II-36

The use of the generic utility calls is described in 4.2, “Utility Calls.”

Copyright © 1999 by Handspring, Inc. All rights reserved.

4.5.1 HsAppEventHandlerSet

Summary

Provided for applications so they can register their own event handler procedure that can be triggered using HsAppEventPost().

Prototype

```
Err
HsAppEventHandlerSet (HsAppEventHandlerPtr procP, DWord evtRefCon)
```

Description

Sets up an application's event handler procedure. The system calls this handler procedure from the main event loop in response to an event posted by the HsAppEventPost() routine.

The event handler has this prototype:

```
Boolean AppEvtHandler (DWord evtRefCon, Word evtNum, Word evtParam)
```

It returns “true” if the event was successfully handled and “false” if not. The `evtRefCon` parameter is a copy of the `evtRefCon` value passed to HsAppEventHandlerSet(). The `evtNum` and `evtParam` parameters are copies of values passed in to HsAppEventPost().

Note that this event handler can be called while the system is in the middle of sending an action code, like `find`, to another application. Even though your application is the “current” application visible to the user at the time, the global CPU registers will not be your application's globals due to the action code processing. Thus the AppEvtHandler routine must never use global variables. Instead it should use the `evtRefCon` parameter as a pointer to a structure containing any variables it needs to reference or update.

The system automatically removes your AppEvtHandler() for you when your application quits.

Parameters

procP	IN	Pointer to event handler procedure, or NIL to remove the current one.
evtRefCon	IN	This 32-bit reference constant gets passed to the event handler when it is called by the system.

Returns

0	if no error

Copyright © 1999 by Handspring, Inc. All rights reserved.

4.5.2 HsAppEventPost

Summary

Provided for applications so that they can post an event to be processed by their own application event handler procedure installed using the HsAppEventHandlerSet() call.

Prototype

```
Err
HsAppEventPost (Word evtNum, Word evtParam)
```

Description

Queues an event for the application's own event handler procedure. The system calls the event handler procedure from the main event loop. The event handler can be installed using the HsAppEventHandlerSet() call.

The event handler has this prototype:

```
Boolean AppEvtHandler (DWord evtRefCon, Word evtNum, Word evtParam)
```

It returns “true” if the event was successfully handled and “false” if not. The `evtRefCon` parameter is a copy of the `evtRefCon` value passed to HsAppEventHandlerSet().

Parameters

evtNum	IN	The event number to post. Can be any value between 0 and hsMaxAppEvent.
evtParam	IN	A 16-bit parameter that is passed to CardEvtHandler.

Returns

0	if no error

Copyright © 1999 by Handspring, Inc. All rights reserved.

4.5.3 HsCardAttrGet

Summary

Retrieves any one of the attributes of a module or its software/hardware interface.

Prototype

```
Err
HsCardAttrGet (Word cardNo, HsCardAttrEnum attr, void* valueP)
```

Description

Returns the current value of a particular module attribute designated by the `attr` parameter. The return value is placed in the buffer pointed to by `valueP`.

Parameters

attr	IN	which attribute to retrieve
cardNo	IN	which module number to query about
*valueP	OUT	value of attribute is returned in this buffer

The possible values of `attr` and the corresponding return types are shown below. The R/W column indicates if settings are read-only (R) or read-write (RW). The read-write attributes can be configured through the HsCardAttrSet() call.

Setting	Value	R/W	Description
hsCardAttrRemovable	Byte	R	True if this module is a removable module. False if the module is not removable (built-in module: cardNo = 0). Returns hsErrInvalidCard if slot “cardNo” does not exist.
hsCardAttrHwInstalled	Byte	R	True if a module is physically installed at “cardNo” and has finished its power-on reset cycle. False if not. Returns hsErrInvalidCard if slot “cardNo” does not exist. Note that this attribute is true before hsCardAttrSwInstalled is true.
hsCardAttrSwInstalled	Byte	R	True if the PalmOS Memory, Data, and other managers have been updated to access the given module. False otherwise. Note that this attribute is not true until some period of time after the module is physically installed and hsCardAttrHwInstalled is true.
hsCardAttrCsBase	DWord	R	Base address of first slot chip select. The second chip select always starts at hsCardAttrCsBase + hsCardAttrCsSize.
hsCardAttrCsSize	DWord	RW	Address range of each of the chip selects.
hsCardAttrAccessTime	DWord	RW	Minimum access time of slot chip selects in nanoseconds. Note that when set, the value passed in is rounded up to the next available access time setting available in hardware.
hsCardAttrReset	Byte	RW	If value is non-zero, the module reset signal going to the module is asserted. If zero, the module reset signal is deasserted.

Copyright © 1999 by Handspring, Inc. All rights reserved.

Setting	Value	R/W	Description
hsCardAttrIntEnable	Byte	RW	If value is non-zero, module interrupts are enabled. If value is zero, the module interrupts are disabled.
hsCardAttrCardParam	DWord	RW	Contains the 32-bit parameter that is passed to the module's interrupt handler, power handler, and event handler.
hsCardAttrIntHandler	void*	RW	This attribute is a pointer to the module interrupt handler which must have this calling convention: `void CardIntHandler (DWord cardParam, Boolean* sysAwakeP);` The `cardParam` that is passed to this interrupt handler can be set up through the hsCardAttrCardParam attribute.
hsCardAttrPwrHandler	void*	RW	This attribute is a pointer to the module's power handler routine, which must have this calling convention: `void CardPwrHandler (DWord cardParam, Boolean sleep, HsCardPwrDownEnum reason)` The `cardParam` is a convenience copy of the hsCardAttrCard-Param module attribute.
hsCardAttrEvtHandler	void*	RW	This attribute is a pointer to a Module Event Handler procedure. A module interrupt handler can trigger the system to call this event handler using HsCardEventPost(). This mechanism is described in "Interrupt Handler Interaction" on page II-16
hsCardAttrLogicalBase	void*	R	Contains the logical base address reserved for the given module slot. This value, added to the module's header offset, gives the address of the module's ROM header. Most applications do not need to use this value. It is provided mainly for advanced applications like flash programming applications that need to format their own module headers.
hsCardAttrLogicalSize	DWord	R	Contains the logical address space reserved for the given module. This value is greater than or equal to the actual addressable memory on the module.
hsCardAttrHdrOffset	DWord	R	Contains the offset from the module base address to the module's ROM header. Most applications do not need to use this value. It is provided mainly for advanced applications like flash programming applications that need to format their own module headers.

Returns

0	if no error
hsErrNotSupported	this setting is not supported
hsErrInvalidCard	invalid module number

Copyright © 1999 by Handspring, Inc. All rights reserved.

4.5.4 HsCardAttrSet

Summary

Sets an attribute of a module's interface.

Prototype

```
Err
HsCardAttrSet (Word cardNo, HsCardAttrEnum attr, void* valueP)
```

Description

Sets the new value of a particular module attribute designated by the `attr` parameter.

Parameters

attr	IN	which attribute to set
cardNo	IN	which module number to set attribute on
*valueP	IN	new value of attribute is passed in this buffer

The possible values of `setting` and the corresponding data type of `*valueP` are documented in the HsCardAttrGet() call. Only those indicated as being read/write (RW) attributes can be changed through this call.

Returns

0	if no error
hsErrNotSupported	this setting is not supported
hsErrInvalidCard	invalid module number
hsErrReadOnly	this attribute is read-only and cannot be changed.

Copyright © 1999 by Handspring, Inc. All rights reserved.

4.5.5 HsCardErrTry/HsCardErrCatch

Summary

These macros are provided for interrupt handlers, system extensions, and shared libraries that need to access memory or devices out on a removable module. These calls enable safe recovery if the module is removed while in critical sections of code.

Prototype

```
HsCardErrTry
{
        // Do something that accesses the removable module
}

HsCardErrCatch
{
        // Recover or cleanup after a failure in the above Try block.
        // The code in this Catch block does not execute if
        // the above Try block completes without a module removal
} HsCardErrEnd

// You must structure your code exactly as above. You cannot have a
// HsCardErrTry { } without a HsCardErrCatch { } HsCardErrEnd,
// or vice versa.
```

Description

The HsCardErrTry/HsCardErrCatch macros should be wrapped around any section of code within an interrupt handler, system extension, shared library, or other system code that needs to access memory or hardware on a removable module. If the module is removed while the critical section of code is executing, control is passed to the HsCardErrCatch() section.

These macros can be nested. For example, you can call a subroutine from within your HsCardErrTry block that has its own try/catch block. Every routine that has an HsCardErrTry clause, however, must have an HsCardErrCatch.

Limitations

HsCardErrTry and HsCardErrCatch are based on setjmp/longjmp. At the beginning of a Try block, setjmp saves the machine registers. A module removal triggers longjmp, which restores the registers and jumps to the beginning of the Catch block. Therefore, any changes in the Try block to variables stored in registers are not retained when entering the Catch block.

The solution is to declare variables that you want to use in both the Try and Catch blocks as “volatile.”

Copyright © 1999 by Handspring, Inc. All rights reserved.

For example:

```
        volatile long    x = 1;     // Declare volatile local variable
        HsErrErrTry
        {
        ...
        x = 100;                // Set local variable in Try
        ...
        }

HsCardErrCatch
{
        if (x > 1)              // Use local variable in Catch
                SysBeep(1);
}       HsCardErrEnd
```

Parameters

none

Returns

N/A

Copyright © 1999 by Handspring, Inc. All rights reserved.

4.5.6 HsCardEventPost

Summary

Provided for interrupt handlers so that they can queue an event for processing later by a CardEvtHandler() procedure.

Prototype

```
Err
HsCardEventPost (Word cardNo, Word evtNum, Word evtParam)
```

Description

Queues an event for a CardEvtHandler() procedure. The system calls the CardEvtHandler procedure from the main event loop of the current application after the interrupt handler returns. The CardEvtHandler can be installed using the hsCardAttrEvtHandler attribute of HsCardAttrSet().

The CardEvtHandler has this prototype:

```
Boolean CardEvtHandler (DWord cardParam, Word evtNum, Word evtParam)
```

It should return “true” if it successfully handled the event and “false” if it did not. The `cardParam` value passed to CardEvtHandler is a convenience copy of the hsCardAttrCardParam module attribute.

Parameters

evtNum	IN	The event number to post. Can be any value between 0 and hsMaxCardEvent.
cardNo	IN	Module number for which to post event.
evtParam	IN	A 16-bit parameter that is passed to CardEvtHandler.

Returns

0	if no error
hsErrInvalidCard	invalid module number

Copyright © 1999 by Handspring, Inc. All rights reserved.

4.5.7 HsCardPatchInstall

Summary

Enables Module Setup utilities to install patches to PalmOS system calls.

Prototype

```
Err
HsCardPatchInstall (Word trapNum, void* procP)
```

Description

Patches a PalmOS system trap call. Setup utilities should always use this call to patch traps rather than the PalmOS SysSetTrapAddress() call because this call ensures compatibility with other third party extensions that may have been installed by the user (through HackMaster or equivalent).

The implementation of the patch must use the HsCardPatchPrevProc() routine to obtain the address of the “old” trap call in order to pass control over to it.

When the module Setup application is called to remove the module software, it must use HsCardPatchRemove() to remove every patch installed by HsCardPatchInstall().

Important: module setup applications are only allowed to install *one* patch per system trap number. If HsCardPatchInstall() is called twice for the same trap without an intervening HsCardPatchRemove(), it returns the error code `hsErrCardPatchAlreadyInstalled`.

Here is an example of a patch implementation that does some work then passes control over to the previous implementation:

```
static Boolean
PrvCardSysHandleEvent (EventPtr eventP)
{
        Boolean    handled;
        Boolean    (*oldProcP) (EventPtr eventP) = 0;

        // Do some stuff
        //...

        // Call old routine
        HsCardPatchPrevProc (sysTrapSysHandleEvent,
                (DWord*)&oldProcP);
        handled = (*oldProcP) (eventP);

        return handled;
}
```

Parameters

trapNum	IN	The trap number of the call to patch. This value is a SysTrap-Number PalmOS enum value as found in the PalmOS header file <SysTraps.h>.
procP	IN	Pointer to procedure to plug into the system trap.

Copyright © 1999 by Handspring, Inc. All rights reserved.

Returns

0	if no error
hsErrInvalidCard	invalid module number

Copyright © 1999 by Handspring, Inc. All rights reserved.

4.5.8 HsCardPatchPrevProc

Summary

Used by system patches installed using HsCardPatchInstall() to get the address of the previous implementation of the system trap.

Prototype

```
Err
HsCardPatchPrevProc (Word trapNum, void** prevProcPP)
```

Description

Use this call inside the implementation of a system patch for a module in order to get the address of the previous implementation of the call. In most cases, patches do their own work before calling the previous implementation. See HsCardPatchInstall() for an example of a patch implementation.

Parameters

trapNum	IN	The trap number of the call that was patched. This value is a SysTrapNumber PalmOS enum value as found in the PalmOS header file <SysTraps.h>
*prevProcPP	OUT	The address of the previous implementation is returned in this pointer.

Returns

0	if no error
ftrErrNoSuchFeature	trap was not patched by HsCardPatchInstall

Copyright © 1999 by Handspring, Inc. All rights reserved.

4.5.9 HsCardPatchRemove

Summary

Removes a module setup application patch installed by HsCardPatchInstall().

Prototype

```
Err
HsCardPatchInstall (Word trapNum, void* procP)
```

Description

When the module setup application gets called to remove the module software, it must use this call to remove every patch installed by HsCardPatchInstall().

Parameters

trapNum	IN	The trap number of the call that was patched. This value is a SysTrapNumber PalmOS enum value as found in the PalmOS header file <SysTraps.h>

Returns

0	if no error
hsErrCardPatchNotInstalled	trap was not patched by HsCardPatchInstall

Copyright © 1999 by Handspring, Inc. All rights reserved.

4.5.10 HsDatabaseCopy

Summary

Copies an entire PalmOS database.

Prototype

```
Err
HsDatabaseCopy (Word srcCardNo, LocalID srcDbID, Word dstCardNo,
char* dstNameP, DWord hsDbCopyFlags, char* tmpNameP,
LocalID* dstDbIDP)
```

Description

Copies an entire PalmOS database. The source and destination can be the same module or different modules, and the source database can be copied from ROM or RAM.

The `hsDbCopyFlags` parameter can be used to control the copy operation. The caller has the option of preserving the creation date, modification date, backup date, and/or modification number of the source database, as well as whether or not an existing database with the same name should be automatically overwritten or not.

Parameters

srcCardNo	IN	Module number of source database.
srcDbID	IN	Database ID of source database.
dstCardNo	IN	Module number of destination database.
dstNameP	IN	Name of new database. If a nil pointer is passed, then the name of the source database is used.
hsDbCopyFlags	IN	One or more of hsDbCopyFlagXXX flags as described below in Table II.2.
tmpNameP	IN	Temporary name to use while copying, or nil pointer to use default temporary name.
*dstDbIDP	OUT	The database ID of the created destination database is returned here unless dstDbIDP is a nil pointer.

Copyright © 1999 by Handspring, Inc. All rights reserved.

Table II.2 lists the possible flags for the hsDbCopyFlags parameter.

Table II.2: hsDbCopyFlags Flags

Flag	Description
hsDbCopyFlagPreserveCrDate	Preserve the creation date of the source database. If not set, then the destination database gets the current date and time as its creation date.
hsDbCopyFlagPreserveModDate	Preserve the modification date of the source database. If not set, then the destination database gets the current date and time as its modification date.
hsDbCopyFlagPreserveModNum	Preserve the modification number of the source database. If not set, then the destination database gets a new modification number unrelated to the source databases.
hsDbCopyFlagPreserveBckUpDate	Preserve the backup date of the source database. If not set, then the destination database gets a backup date of 0.
hsDbCopyFlagOKToOverwrite	Preserve the creation date of the source database. If not set, then the destination database gets the current date and time as its creation date.
hsDbCopyFlagDeleteFirst	Delete existing destination database first, if it exists. Normally any pre-existing destination database with the same name is left intact until the source has been copied over as a temporary database. This guarantees that any pre-existing database is not lost if the copy operation fails. If space is limited on the destination module, however, there may not be room for two temporary copies of the destination database, so this flag can be set to override the default behavior.

Returns

0	if no error
non-zero	if a Data, Memory, or other type of error occurs during the copy operation

Copyright © 1999 by Handspring, Inc. All rights reserved.

4.5.11 HsEvtResetAutoOffTimer

Summary

Provided for interrupt handlers so that they can reset the auto-off timer of the system and turn on the LCD if it is not already on.

Prototype

```
Err
HsEvtResetAutoOffTimer (SDWord stayAwakeTicks, Boolean userOn)
```

Description

By default, if a module interrupt wakes the device and the handler returns without calling HsEvtResetAutoOffTimer(), the system puts the device back to sleep on the next round through the event loop (see "Power Management Options for Interrupt Handlers" on page II-8 for a complete description).

However, by calling HsEvtResetAutoOffTimer(), the interrupt handler can tell the system to turn on the LCD if it is not already turned on and tell the system to stay awake for at least a certain number of system ticks. If this call is made when the LCD is already on, it has no effect other than to possibly extend the auto-off timer.

The `stayAwakeTicks` parameter is specified in system ticks, but the current granularity of the system in this respect is only approximately five seconds. Consequently if you pass a value like `sysTicksPerSecond*1`, the system might not shut off for five seconds. Passing (-1) for `stayAwakeTicks` makes the system stay awake for at least the current auto-off time as specified in the General Preferences panel.

Parameters

stayAwakeTicks	IN	The minimum amount of time, in system ticks, to keep the system awake. Even though this parameter is specified in ticks, the minimum granularity of the system in this respect is about five seconds. Passing (-1) means to stay awake for the current Auto-off time as specified in the General Preference panel.
userOn	IN	If true, turn on the LCD if it is not already on.

Returns

0	if no error

Copyright © 1999 by Handspring, Inc. All rights reserved.

Chapter 5 External Interface

The Springboard expansion slot allows for hardware and software expansion of Handspring's family of PalmOS-compatible handheld computers and for seamless hot Plug & Play capability.

Figure II.1 shows the block diagram of the slot interface.

Figure II.1: Springboard Expansion Slot Connector Block Diagram

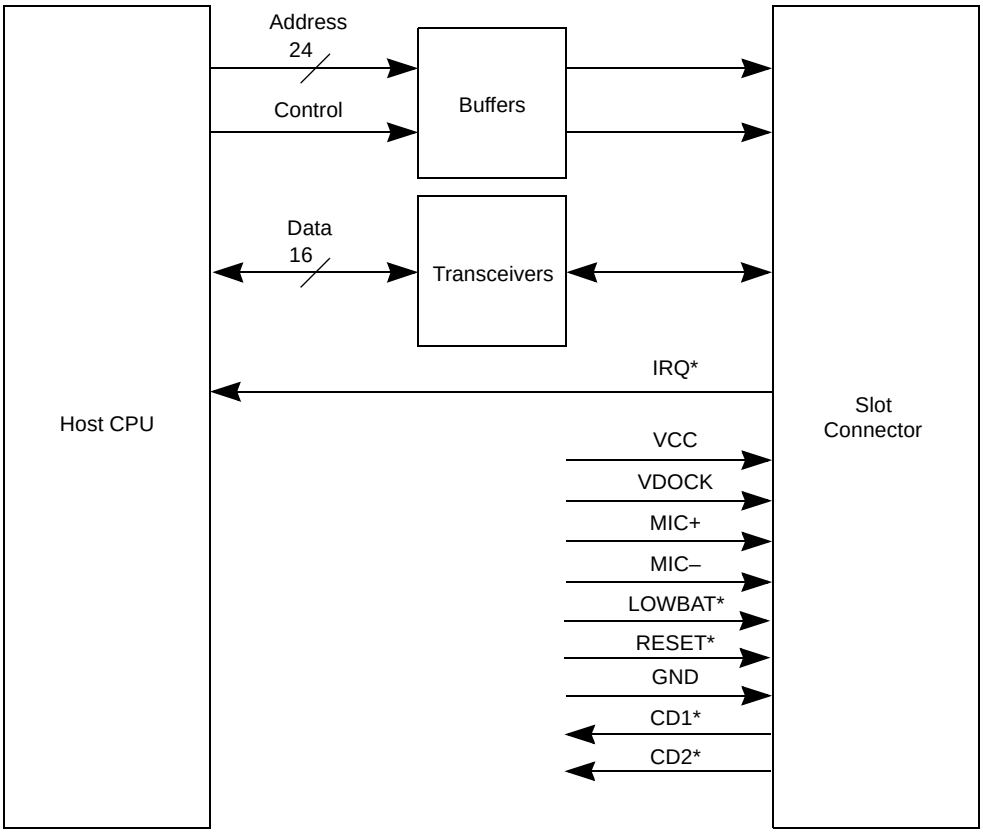

The Springboard expansion slot provides a slave-only interface for expanding the capabilities of the main handheld unit. The slot supports hot swapping via buffers and transceivers; it otherwise functions as if it is directly connected to the host CPU bus. Physically, the Springboard expansion slot connector is identical to a PCMCIA connector. However, the electrical specifications differ between these two connectors.

Modules can be inserted into or removed from the base unit at any time, even when the device is on. When a module is inserted, the software and hardware automatically configure the module, making its features instantly available. A module can be a simple ROM-only module with a set of

Copyright © 1999 by Handspring, Inc. All rights reserved.

additional applications, or it can provide additional powerful hardware functionality, such as network connectivity, sound support, and communications options. A variety of functions, such as pagers, radios, or backup flash memory, can be interfaced with Handspring's handheld computers in this way.

Figure II.2 shows the Springboard 68-pin expansion slot.

Figure II.2: Springboard expansion slot 3-D view

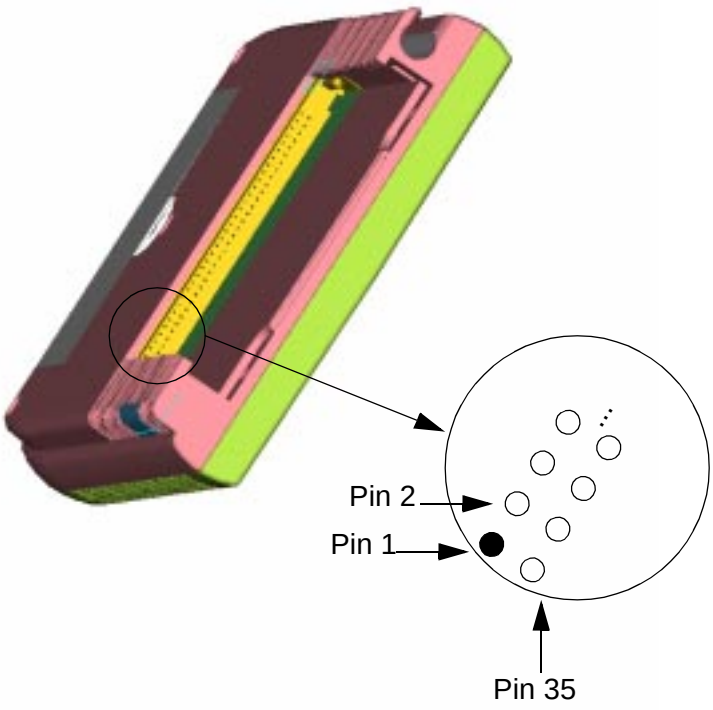

Copyright © 1999 by Handspring, Inc. All rights reserved.

5.1 Pinout

Table II.1 summarizes the signal names with their respective pin numbers on the 68-pin expansion slot connector. Note that the signal direction (I/O/P/PU[1]) is viewed from the module to the handheld.

Table II.1: Springboard Expansion Slot Connector Pin Summary

Pin	Name	I/O/P/PU[1]	Function	Pin	Name	I/O/P/PU	Function
1	GND	P	Ground	35	GND	P	Ground
2	D3	I/O	Data Bit 3	36	CD1*	O/PU	Card detect 1
3	D4	I/O	Data Bit 4	37	D11	I/O	Data Bit 11
4	D5	I/O	Data Bit 5	38	D12	I/O	Data Bit 12
5	D6	I/O	Data Bit 6	39	D13	I/O	Data Bit 13
6	D7	I/O	Data Bit 7	40	D14	I/O	Data Bit 14
7	CS0*[2]	I	Chip Select 0	41	D15	I/O	Data Bit 15
8	A10	I	Address Bit 10	42	CS1*	I	Chip Select 1
9	OE*	I	Output Enable	43	N.C.	—	No Connect
10	A11	I	Address Bit 11	44	N.C.	—	No Connect
11	A9	I	Address Bit 9	45	N.C.	—	No Connect
12	A8	I	Address Bit 8	46	A17	I	Address Bit 17
13	A13	I	Address Bit 13	47	A18	I	Address Bit 18
14	A14	I	Address Bit 14	48	A19	I	Address Bit 19
15	WE*	I	Write Enable	49	A20	I	Address Bit 20
16	IRQ*	O/PU	Interrupt Request	50	A21	I	Address Bit 21
17	VCC	P	Module VCC, 3.3V	51	VCC	P	Module VCC, 3.3V
18	VDOCK	P	Dock VCC	52	VDOCK	P	Docking Voltage
19	A16	I	Address Bit 16	53	A22	I	Address Bit 22
20	A15	I	Address Bit 15	54	A23	I	Address Bit 23
21	A12	I	Address Bit 12	55	N.C.	—	No Connect
22	A7	I	Address Bit 7	56	N.C.	—	No Connect
23	A6	I	Address Bit 6	57	N.C.	—	No Connect
24	A5	I	Address Bit 5	58	RESET*	I	Reset
25	A4	I	Address Bit 4	59	N.C.	—	No Connect
26	A3	I	Address Bit 3	60	MIC+	I	Microphone +
27	A2	I	Address Bit 2	61	MIC-	I	Microphone -
28	A1	I	Address Bit 1	62	N.C.	—	No Connect
29	A0	I	Address Bit 0	63	LOWBAT*	I	Low Battery
30	D0	I/O	Data Bit 0	64	D8	I/O	Data Bit 8
31	D1	I/O	Data Bit 1	65	D9	I/O	Data Bit 9
32	D2	I/O	Data Bit 2	66	D10	I/O	Data Bit 10
33	N.C.	—	No Connect	67	CD2*	O/PU	Card detect 2
34	GND	P	Ground	68	GND	P	Ground

1. I = input, O = output, and P = power, with respect to the module. PU indicates the signal is internally pulled up within the the handheld.
2. * indicates an active-low signal.

Copyright © 1999 by Handspring, Inc. All rights reserved.

5.2 Signal Descriptions

The signals are described below in alphabetical order. Active-low signals have an asterisk “*” at the end of their names.

A[23:0] **Address Bus** **I**

The 24-bit address bus provides addressing for up to 32 MB. Each of the two chip selects (CS0 and CS1) has direct access of up to 16 MB. Address line A23 is the most significant address bit, and A0 is the least significant address bit. The default size of each region is 16 MB and is software programmable. This bus is an input to the expansion slot; it is always driven during normal and sleep mode. The address bus is valid throughout the entire bus cycle.

Note: In Visor, Handspring’s first generation of handheld computer, A0 is not used. So in this implementation of the Springboard expansion slot, the bus is 16-bit only.

CD1*, CD2* **Module Detects** **O**

CD1* and CD2* are active-low module detect signals that indicate to the handheld when the expansion module has been firmly seated into the Springboard expansion slot. The two Module Detect pins are physically shorter than all other pins on the expansion connector. On the host side, the signals perform two functions: 1) they interrupt the handheld to alert the CPU that a module has been inserted or removed, and 2) they begin turning on the VCC power supply. Depending on the electrical load on the module, VCC is valid within 5 ms. Both signals should be tied directly to GND on the expansion module.

CS0*, CS1* **Chip Selects** **I**

These two active-low chip select signals control access to the two addressable regions on the module. The address space for CS0* is referred to as csSlot0; the address space for CS1* is referred to as csSlot1. In order for the PalmOS to recognize the module and its contents, use CS0* to access ROM or FLASH. CS1* is optional and can be used to interface with additional ROM, FLASH, UARTs, or other peripheral devices. Both chip select signals are asserted for the duration of the memory cycle. Only one of the two chip selects is valid for each module access. The address bus is guaranteed to be valid before and during the assertion of the chip select signal. Refer to Section 2.1, “Memory Space,” for more information on the chip selects and their corresponding address spaces.

D[15:0] **Data Bus** **I/O**

The data bus consists of 16 data lines, D[15:0]. D15 is the most significant data bit, and D0 is the least significant data bit. Only 16-bit operations are performed on the data bus.

Copyright © 1999 by Handspring, Inc. All rights reserved.

GND **Module Ground** **I**

GND is the ground connection to the module. All GND signals must be connected to the module's ground reference or plane.

IRQ* **Interrupt Request** **O**

The active low interrupt request is level sensitive. This signal is output from the Springboard module whenever interrupt service is required from the handheld computer. There is no default interrupt service routine for the module, so the application resident on the expansion module must install the interrupt service routine (ISR) during initialization (see ""Interrupts" on page II-6 for more information on interrupt handling). Interrupt acknowledgment is user-defined and must be accommodated by the expansion module application as well. The internal Visor interface has a pull-up resistor, so the module does not require one.

LOWBAT* **Low Battery Warning** **I**

The low battery warning signal indicates that the handheld's batteries are below 1.6 V or are being swapped out. When this signal is asserted, the expansion module is electrically "removed" to prevent data loss in the handheld. When the batteries are replaced, the module is "re-inserted."

MIC+, MIC- **Microphone** **I**

These two signals interface to the microphone on the handheld unit. The signals are a differential pair and are directly connected to an electret condenser microphone. Appropriate bias must be supplied by the module on the MIC+ signal. The Visor handheld uses a microphone with a 2.2K ohm impedance, a standby operating voltage of 2.0 V, and a maximum current consumption of 0.5 ma.

OE* **Output Enable** **I**

OE* is the active-low output enable, or read signal, for the module. When qualified with a low on either CS0* or CS1*, a low on OE* indicates a read cycle from the module. The address bus is valid before the assertion of OE*. The module can drive the data bus as soon as a chip select and OE* are asserted. Data must be driven for the entire cycle, as determined by the levels on the chip select and OE*. WE* is deasserted during read cycles.

Note: The chip selects are not guaranteed to be asserted prior to the assertion of OE*. Also the cycle is ended when either a chip select or OE* is deasserted.

RESET* **Module Reset** **I**

RESET* is an active low reset signal for the expansion module. During module insertion, RESET* is asserted while VCC is rising; it is held asserted for 30 ms minimum after the module is inserted to allow circuitry on the module sufficient time to stabilize. Because module power is guaranteed to be applied within 5 ms, the module will have a minimum

Copyright © 1999 by Handspring, Inc. All rights reserved.

valid reset signal of 25 ms. Application software can also assert this signal at any time to reset the module.

VCC **Module Power** **I**

VCC is the 3.3V power supply, which can be used to power the expansion module (some expansion modules can supply their own power). Power is not provided on these pins until the module is firmly seated in the slot and both module detects, CD1* and CD2*, are asserted. The power supply ramps up to 3.3V ± 5% within 5 ms of insertion. The maximum current that can be supplied by the slot is 100 mA. Expansion module designs that use this power source must take into account what the users will see when LOWBAT* is asserted and the Springboard expansion slot power is removed.

VDOCK **Docking voltage** **I**

This pin could provide a charging supply to the module when the handheld is placed into a special charging dock. The handheld passes this charging supply from a pin on its cradle connector through to pins on the Springboard expansion module connector.

For developers who want to use this pin, note that future Handspring products might make use of it and that the preliminary specification is 5V @ 1A max.

WE* **Write Enable** **I**

WE* is the active-low write enable signal for the module. When qualified with a low on either CS0* or CS1*, a low on WE* indicates a write cycle to the module. The address bus is valid before the assertion of WE*. The data bus, driven by the host interface, is valid before the assertion of WE*. In addition, WE* is deasserted prior to the deassertion of the chip select. OE* is deasserted during write cycles.

Note: Because there is not a separate write enable for each byte, all 16 bits of the data bus are written at the same time. Thus there is no support for byte writes to the expansion module.

Copyright © 1999 by Handspring, Inc. All rights reserved.

Chapter 6 Electrical and mechanical specifications

This chapter provides the electrical and timing characteristics of the Visor handheld and Springboard module. It also provides electrical and mechanical guidelines for your Springboard design.

6.1 Absolute electrical maximum ratings

Table II.1 lists the maximum electrical ratings for the Visor handheld.

Table II.1: Absolute electrical maximum ratings for the Visor handheld

Rating	Symbol	Value	Unit
Storage Temperature Range	T_{stg}	-20 to 85	°C
Operating Temperature Range	T_A	0 to 50	°C

6.2 DC electrical characteristics

Table II.2 lists the DC electrical characteristics for Springboard modules. Unless otherwise specified, all parameters are specified at V_{CC} = 3.3V, 25 °C.

Table II.2: DC electrical characteristics

Symbol	Parameter	Min	Max	Unit
Vcc	Supply Voltage[1]	3.0	3.6	V
I_{cc}	Operating Current	–	100	mA
I_{s1}	Standby Current, LOWBAT* = H	–	100	µA
I_{s2}	Standby Current, LOWBAT* = L[2]	–	10	µA
V_{IH}	Input High Voltage	2.0	Vcc + 0.5	V
V_{IL}	Input Low Voltage	0.0	0.8	V
V_{OH}	Output High Voltage (I_{OH} = 2.0 mA)	2.4	Vcc + 0.5	V
V_{OL}	Output Low Voltage (I_{OL} = -2.5 mA)	0.0	0.4	V
I_{IL}	Input Leakage Current (0V <= V_{IN} <= Vcc)	–	±5	µA
I_{OZ}	3-state Leakage Current (0V <= V_{OUT} <= Vcc)	–	±5	µA
V_{DOCK}[3]	Docking Voltage	–	5	V

1. In Visor, Handspring first generation of handheld computer, the minimum supply voltage could actually be zero if LOWBAT* is asserted.
2. Since the Visor handheld (see note 1) actually removes power from the Springboard expansion slot, this specification is for future product compatibility.
3. Prelimnary.

Copyright © 1999 by Handspring, Inc. All rights reserved.

6.3 AC Characteristics

This section lists the AC timing parameters for Springboard modules. Unless otherwise specified, all parameters are specified at V_{CC} = 3.3V, 25 °C.

Table II.3: Read Cycle Timing Parameters

Num	Parameter	Min	Max	Unit
1	Address valid to CSx* asserted	55	–	ns
2	WE* negated before address valid	-5	–	ns
3	CSx* asserted to OE* asserted[1]	–	5	ns
4	Data valid from CSx* asserted	–	95 + nT[2]	ns
5	CSx* pulse width	125 + nT	425	ns
6	Data in hold after CSx* negated	5	–	ns
7	OE* negated after CSx* negated	3	26	ns

1. The chip selects are not guaranteed to be asserted prior to the assertion of OE*. Also the cycle is ended when either a chip select or OE* is deasserted.
2. n is the number of wait states. T is the system clock period.

Figure II.1: Read Cycle Timing

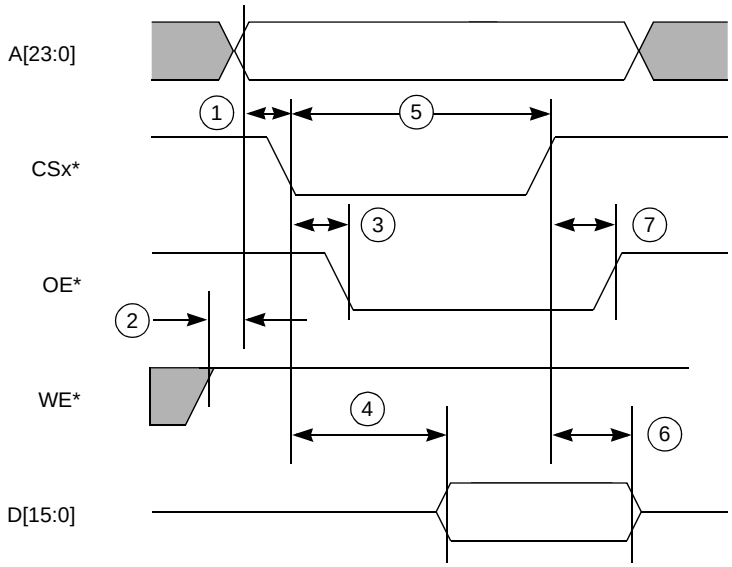

Copyright © 1999 by Handspring, Inc. All rights reserved.

Table II.4: Write Cycle Timing

Num	Parameter	Min	Max	Unit
1	Address valid to CSx* asserted	55	–	ns
2	CSx* asserted to WE* asserted	-5	13	ns
3	CSx* asserted to data valid	–	45	ns
4	CSx* pulse width	125 + nT[1]	425	ns
5	WE* negated before CSx* negated	25	40	ns
6	Data hold after CSx* negated	35	–	ns
7	CSx* negated to data in, Hi-Z	–	55	ns

1. n is the number of wait states. T is the system clock period.

Figure II.2: Write Cycle Timing

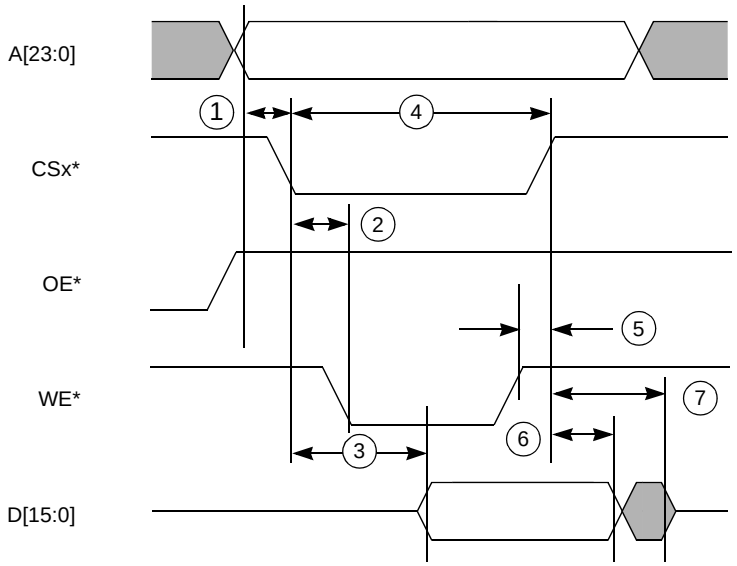

6.4 Springboard connector insertion/extraction force ratings

Table II.5 lists the mechanical insertion/extraction force ratings for the Springboard expansion slot connector.

Table II.5: Insertion/extraction force for the Springboard expansion slot connector

Rating	Value	Unit
Insertion force[1] (PRELIMINARY)	1.5 - 6	pounds
Extraction force (PRELIMINARY)	1.5 - 5	pounds

1. These rating were verified up to 3000 insertion/extraction of the module.

Copyright © 1999 by Handspring, Inc. All rights reserved.

6.5 Springboard module base color

The Visor handheld basic graphite color is also used for the module. The specification for this color is:

Material	GE C2800 PC/ABS
Color	BK-1455
Texture	11010

Copyright © 1999 by Handspring, Inc. All rights reserved.

Chapter 7 HsExt.h Header File

This chapter lists the HsExt.h header file, which contains the equates for all the constants referenced in this manual. After the tools have been installed, the file can be found in the "`<installDir>\PalmTools\m68k-palmos-coff\include\PalmOS\Handspring`" folder.

```
/*************************************************************
*
*  Project:
*       Handspring Common Includes
*
*  Copyright info:
*       Copyright 1998 Handspring, Inc. All Rights Reserved.
*
*
*  FileName:
*       HsExt.h
*
*  Description:
*       Public header file for the Handspring extensions to PalmOS
*
*  ToDo:
*
*  History:
*       13-Jan-1999 RM - Created by Ron Marianetti
*************************************************************/

#ifndef   __HSEXT_H__
#define   __HSEXT_H__


// Include Common equates
#include <Common.h>

// Handspring Database creator IDs
#include <HsCreators.h>


//==========================================================================
// Handspring API Equates
//==========================================================================

// This is the Handspring feature id. Apps can tell if they're on
//  a handspring device if they get 0 err back from:
//              err = FtrGet (hsFtrCreator, hsFtrIDVersion, &value)
#define hsFtrCreator                      'hsEx'


// 0xMMmfsbbb, where MM is major version, m is minor version
// f is bug fix, s is stage: 3-release,2-beta,1-alpha,0-development,
// bbb is build number for non-releases
// V1.12b3   would be: 0x01122003
// V2.00a2   would be: 0x02001002
// V1.01     would be: 0x01013000
#define hsFtrIDVersion                     0


// Modification date of Handspring extensions
#define hsFtrIDModDate                     1
```


Copyright © 1999 by Handspring, Inc. All rights reserved.

```
// Feature number indicating that the Launcher Database Mgr library is loaded.
//  The value of the feature is the refNum of the loaded library.
//  Call FtrGet (hsFtrCreator, hsFtrIDLdbMgrLibRefNum, ...) to get this feature.
#define hsFtrIDLdbMgrLibRefNum  2


// ------------------------------------------------------------------------------
// Error codes
// ------------------------------------------------------------------------------
#define hsErrorClass                        (appErrorClass+0x0100)
#define hsErrNotSupported         (hsErrorClass | 1)
#define hsErrInvalidCardNum       (hsErrorClass | 2)
#define hsErrReadOnly                       (hsErrorClass | 3)
#define hsErrInvalidParam         (hsErrorClass | 4)
#define hsErrBufferTooSmall       (hsErrorClass | 5)
#define hsErrInvalidCardHdr       (hsErrorClass | 6)
#define hsErrCardPatchAlreadyInstalled  (hsErrorClass | 7)
#define hsErrCardPatchNotInstalled  (hsErrorClass | 8)



// ------------------------------------------------------------------------------
//  Key codes and events
// ------------------------------------------------------------------------------

// Max card user event number that can be passed to HsCardEventPost()
#define hsMaxCardEvent                      0x07

// Max app user event number that can be passed to HsAppEventPost()
#define hsMaxAppEvent                       0x03

// Keycode range assigned to us from 3Com: vchrSlinkyMin to vchrSlinkyMax
#define hsChrRangeMin                       0x1600
#define hsChrRangeMax                       0x16FF


// New key codes we generate for the "dot" soft icons
#define hsChrMidLeftDot           hsChrRangeMin
#define hsChrMidRightDot   (hsChrRangeMin+1)
#define hsChrBotLeftDot           (hsChrRangeMin+2)
#define hsChrBotRightDot   (hsChrRangeMin+3)

// The virtual cradle 2 character i
#define hsChrCradle2OnChr         (hsChrRangeMin+4)  // dock input level asserted
#define hsChrCradle2OffChr        (hsChrRangeMin+5)  // dock input level de-asserted

// card removed or inserted
#define hsChrCardStatusChg        (hsChrRangeMin+6)


// Range of key events available to the HsCardEventPost() call
#define hsChrCardUserFirst        (hsChrRangeMin+0x80)
#define hsChrCardUserLast         (hsChrCardUserFirst+hsMaxCardEvent)


// Range of key events available to the HsAppEventPost() call
#define hsChrAppUserFirst         (hsChrCardUserLast+1)
#define hsChrAppUserLast          (hsChrAppUserFirst+hsMaxAppEvent)




// ------------------------------------------------------------------------------
// Special Databases that can be present on a card
// ------------------------------------------------------------------------------

// Handspring defined selector codes for the "CardSetup" application on
//  a card
#define hsSysAppLaunchCmdInstall  (sysAppLaunchCmdCustomBase+0)
#define hsSysAppLaunchCmdRemove  (sysAppLaunchCmdCustomBase+1)
```


Copyright © 1999 by Handspring, Inc. All rights reserved.

```
// The cmdPBP parmeter to the setup app's PilotMain() will point to
//  this structure when the hsSysAppLaunchCmdInstall action code is sent
typedef struct
  {
        Word            cardNo;                                 // card # of removable card
        Byte            isReset;                        // true if being called due to a soft or
                                                                                        //  hard reset. The setup
app must be "tolerant"
                                                                                        //  of being sent an
install action code
                                                                                        //  during reset even if
it was already
                                                                                        //  installed before the
reset.
        Byte            reserved;

        // Database info of the launched setup app, sent for convenience
        Word            setupCardNo;            // card # of setup app
        LocalID         setupDbID;                      // database ID of setup app

  } HsSysAppLaunchCmdInstallType;

// The cmdPBP parmeter to the setup app's PilotMain() will point to
//  this structure when the hsSysAppLaunchCmdRemove action code is sent
typedef struct
  {
        Word            cardNo;                                 // card # of removable card
  } HsSysAppLaunchCmdRemoveType;


// If a card has a database with this type and creator, it will be automatically
//  copied to card 0 when inserted and sent an action code of
// hsSysAppLaunchCodeInstall. Likewise, when the card is removed,
//  this app will be sent an action code of hsSysAppLaunchCodeRemove and
//  then it will be deleted.
//
// hsFileCCardSetup     <= defined in HsCreators.h
// hsFileTCardSetup     <= defined in HsCreators.h


// If a card has an application database with this name, it will be
//  automatically launched when the card is inserted
#define hsWelcomeAppName          "CardWelcome"



// ---------------------------------------------------------------------------
// Library alias names that SysLibFind maps to a real library name
//  according to the appropriate hsPrefSerialLibXXX setting.
//
// By Convention, library alias names start with a '*'. The exception
//  is the "Serial Library" name which is mapped in order to
//  be compatible with pre-existing applications that already use it.
// ---------------------------------------------------------------------------
#define hsLibAliasDefault         "Serial Library" //hsPrefSerialLibDef
#define hsLibAliasHotSyncLocal  "*HsLoc  SerLib" //hsPrefSerialLibHotSyncLocal
#define hsLibAliasHotSyncModem  "*HsMdm  SerLib" //hsPrefSerialLibHotSyncModem
#define hsLibAliasIrda                    "*Irda   SerLib" //hsPrefSerialLibIrda
#define hsLibAliasConsole         "*Cons   SerLib" //hsPrefSerialLibConsole


// Actual library name of the Dragonball's built-in serial library.
// This is the default value of the hsPrefDefSerialLib pref setting which
//  SysLibFind uses to map an incoming library name to an actual library
//  name.
#define hsLibNameBuiltInSerial  "BuiltIn SerLib"



// ---------------------------------------------------------------------------
// Flags for the HsDatabaseCopy routine
// ---------------------------------------------------------------------------
```


Copyright © 1999 by Handspring, Inc. All rights reserved.

```
#define hsDbCopyFlagPreserveCrDate  0x0001  // preserve creation date
#define hsDbCopyFlagPreserveModDate  0x0002  // preserve modification date
#define hsDbCopyFlagPreserveModNum  0x0004  // preserve modification number
#define hsDbCopyFlagPreserveBckUpDate 0x0008  // preserve backup  date
#define hsDbCopyFlagOKToOverwrite  0x0010  // if true, it's OK to overwrite
                                                                                                    //
existing database.
#define hsDbCopyFlagDeleteFirst  0x0020  // delete dest DB first, if it
                                                                                                    //
exists. Use this if space
                                                                                                    //  is
limited on dest card.
                                                                                                    //
Implies hsDbCopyFlagOKToOverwrite
#define hsDbCopyFlagPreserveUniqueIDSeed 0x0040  // preserve database unique ID seed


// ---------------------------------------------------------------------------
// Flags for the HsDmGetNextDBByTypeCreator() call
// ---------------------------------------------------------------------------
#define hsDmGetNextDBFlagOneCard  0x00001  // Only search 1 card


// ---------------------------------------------------------------------------
// Reason codes for the card power handler
// ---------------------------------------------------------------------------
typedef enum
  {
        hsCardPwrDownNormal = 0,                  // normal power down
        hsCardPwrDownLowVoltage = 1               // low voltage
  } HsCardPwrDownEnum;


// ---------------------------------------------------------------------------
// Equates for the HsCardAttrGet/Set calls
// ---------------------------------------------------------------------------

// Prototypes for the various handlers that can be installed for a card
typedef void(*HsCardIntHandlerPtr) (DWord cardParam, Boolean* sysAwakeP);

typedef void(*HsCardPwrHandlerPtr) (DWord cardParam, Boolean sleep,
                                                                                        Word /
*HsCardPwrDownEnum*/ reason);

typedef Boolean (*HsCardEvtHandlerPtr) (DWord cardParam, Word evtNum,
                                                                                        Word evtParam);

// The attributes
typedef enum
  {                                                                 // Type   : RW : Description
                                                                    // ---------------------------------
        hsCardAttrRemovable,// Byte  : R  : true if card is removable
        hsCardAttrHwInstalled,// Byte  : R  : true if card hardware is installed
        hsCardAttrSwInstalled,// Byte  : R  : true if card software is installed

        hsCardAttrCsBase,        // DWord  : R  : address of first chip select
        hsCardAttrCsSize,        // DWord  : RW : size of chip selects
        hsCardAttrAccessTime,// DWord  : RW : required access time

        hsCardAttrReset,         // Byte   : RW : if true, assert reset to card
        hsCardAttrIntEnable,// Byte   : RW : if true, enable card interrupt

        hsCardAttrCardParam,// DWord  : RW : parameter passed to int handler,
                                                                    //              power handler, and event
handler

        hsCardAttrIntHandler,// HsCardIntHandlerPtr
                                                                    //        : RW : card interrupt handler

        hsCardAttrPwrHandler,// HsCardPwrHandlerPtr
                                                                    //        : RW : card power handler
```


Copyright © 1999 by Handspring, Inc. All rights reserved.

```
        hsCardAttrEvtHandler,// HsCardEvtHandlerPtr
                                                                //        : RW : card event handler

        hsCardAttrLogicalBase,// DWord  : R  : logical base address of card
        hsCardAttrLogicalSize,// DWord  : R  : total reserved address space for card
        hsCardAttrHdrOffset,// DWord  : R  : offset from halCardAttrLogicalBase to
                                                                //                card header

        // Leave this one at end!!!
        hsCardAttrLast

  } HsCardAttrEnum;




// ---------------------------------------------------------------------------
// Equates for the HsPrefGet/Set calls
// ---------------------------------------------------------------------------

// The prefs
typedef enum
  {                                                             // Type : Description
                                                                // ---------------------------------

        // The following are used by SysLibFind() to resolve a virtual library
        //  name to an actual one.
        hsPrefSerialLibDef,       // Char[] : Name of serial library
                                                                //    to substitute for
hsLibAliasDefault
        hsPrefSerialLibHotSyncLocal,  // Char[] : Name of serial library
                                                                //    to substitute for
hsLibAliasHotSyncLocal
        hsPrefSerialLibHotSyncModem,  // Char[] : Name of serial library
                                                                //    to substitute for
hsLibAliasHotSyncModem
        hsPrefSerialLibIrda,  // Char[] : Name of serial library
                                                                //    to substitute for hsLibAliasIrda
        hsPrefSerialLibConsole,  // Char[] : Name of serial library
                                                                //    to substitute for
hsLibAliasConsole


        // Leave this one at end!!!
        hsPrefLast

  } HsPrefEnum;


// ---------------------------------------------------------------------------
// Prototype of the App Event Handler that can be setup using
//  HsAppEventHandlerSet() and triggered using HsAppEventPost(). The
//  evtRefCon is a copy of evtRefCon passed to HsAppEventHandlerSet()
//
// This routine should not rely on globals since it may be called
//  while in the context of another app's action code.
// ---------------------------------------------------------------------------
typedef Boolean (*HsAppEvtHandlerPtr) (DWord evtRefcon, Word evtNum,
                                       Word evtParam);




//===========================================================================
// Handspring selectors for the Handspring system trap
//
// NOTE: If you add traps here, you must:
//
//        1.) Add a prototype to the Prototypes section of this header or
//                to the prototype section of HsExtPrv.h if it's  private call
//
//        2.) Modify the PrvHsSelector routine in HsExtensions.c to recognize
```


Copyright © 1999 by Handspring, Inc. All rights reserved.

```
//                and dispatch to the new call
//
// IMPORTANT: If you change any of these trap numbers, be sure to
//  update any *Patches.txt patch files that use the trap number to patch
//  the object code.
//
//==============================================================================
// This is the trap number we use for the Hs trap calls
// IMPORTANT: If this changes, you must manually update the any object code
//  patches files. PalmVSystemboot10001Patches.txt is at least one that
//  patches this trap in .
#define sysTrapHsSelector         sysTrapSysReserved4

#define hsSelectorBase  0
typedef enum
  {
        hsSelInfo = hsSelectorBase,  // 0

        hsSelPrvInit,                                   // 1
        hsSelPrvCallSafely,                     // 2
        hsSelPrvCallSafelyNewStack,  // 3

        hsSelDatabaseCopy,                      // 4
        hsSelExtKeyboardEnable,           // 5
        hsSelCardAttrGet,                       // 6
        hsSelCardAttrSet,                       // 7
        hsSelCardEventPost,                     // 8
        hsSelPrvErrCatchListP,            // 9

        hsSelPrefGet,                                   // A
        hsSelPrefSet,                                   // B

        hsSelDmGetNextDBByTypeCreator,  // C
        hsSelDmGetNextDBInit,             // D

        hsSelCardHdrUpdate,                     // E

        hsSelAppEventHandlerSet,   // F
        hsSelAppEventPost,                      // 10

        hsSelUsbCommStatePtr,             // 11

        hsSelCardPatchInstall,            // 12
        hsSelCardPatchRemove,             // 13

        hsSelEvtResetAutoOffTimer,  // 14

        hsSelDmDatabaseUniqueIDSeed,  // 15

        hsSelAboutHandspringApp,   // 16

        hsSelDmDatabaseIsOpen,            // 17
        hsSelDmDatabaseIsProtected,  // 18

        // Leave this one at the end!!!
        hsSelLast

  } HsSelEnum;

#define hsNumSels (hsSelLast - hsSelBase)



// <chg 11-6-98 RM>
#if (defined __GNUC__) && (EMULATION_LEVEL == EMULATION_NONE)

        #define SYS_SEL_TRAP(trapNum, selector) \
            __attribute__ ((inline (0x3f3c, selector, m68kTrapInstr+sysDispatchTrapNum,trapNum)))

#else

        #define SYS_SEL_TRAP(trapNum, selector) \
```


Copyright © 1999 by Handspring, Inc. All rights reserved.

```
                FOURWORD_INLINE(0x3f3c, selector, m68kTrapInstr+sysDispatchTrapNum,trapNum)

#endif



//==============================================================================
// HsCardErrTry / Catch / support
//
// ---------------------------------------------------------------------
//
//  Typical Use:
//      x = 0;
//              HsCardErrTry
//        {
//          // access card in some manner that may fail
//          value = cardBaseP[0]
//
//          // do other stuff too
//                      x = 1;                                          // Set local variable in Try
//
//          // access card again
//          value = cardBaseP[1]
//
//                }
//
//              HsCardErrCatch
//        {
//          // Recover or cleanup after a failure in above Try block
//          // The code in this block does NOT execute if the above
//          //  try block completes without a card removal
//                      if (x > 1)
//                        SysBeep(1);
//
//                } HsCardErrEnd
//
//==============================================================================

// Try & Catch macros
#define HsCardErrTry                                                                    \
        {
\
          ErrExceptionType_tryObject;                                           \
          Ptr*                          _listP;
\
          _listP = HsPrvErrCatchListP();                        \
          _tryObject.err = 0;                                                           \
          _tryObject.nextP = (ErrExceptionPtr)*_listP;\
          *_listP = (Ptr)&_tryObject;                                   \
          if (ErrSetJump(_tryObject.state) == 0)                    \
            {


// NOTE: All variables referenced in and after the ErrCatch must
// be declared volatile.  Here's how for variables and pointers:
//      volatile Word             oldMode;
//      ShlDBHdrTablePtr volatile hdrTabP = nil;
//
// If you have many local variables after the ErrCatch you may
// opt to put the ErrTry and ErrCatch in a separate enclosing function.
#define HsCardErrCatch                                                                  \
                  *_listP = (Ptr)_tryObject.nextP;              \
                }
\
          else
\
            {
\
                  *_listP = (Ptr)_tryObject.nextP;
```


Copyright © 1999 by Handspring, Inc. All rights reserved.

```
#define HsCardErrEnd                                                                    \
                }
\
        }



//==========================================================================
// Prototypes
//==========================================================================
DWord           HsInfo (Word item, Word paramSize,  void* paramP)
                                SYS_SEL_TRAP (sysTrapHsSelector, hsSelInfo);


Err                     HsDatabaseCopy (Word srcCardNo, LocalID srcDbID, Word dstCardNo,
                                                        char* dstNameP, DWord hsDbCopyFlags, char*
tmpNameP,
                                                        LocalID* dstDbIDP)
                                SYS_SEL_TRAP (sysTrapHsSelector, hsSelDatabaseCopy);

Err                     HsExtKeyboardEnable (Boolean enable)
                                SYS_SEL_TRAP (sysTrapHsSelector, hsSelExtKeyboardEnable);


Err                     HsCardAttrGet (Word cardNo, Word /*HsCardAttrEnum*/ attr,
                                                void* valueP)
                                SYS_SEL_TRAP (sysTrapHsSelector, hsSelCardAttrGet);

Err                     HsCardAttrSet (Word cardNo, Word /*HsCardAttrEnum*/ attr,
                                                void* valueP)
                                SYS_SEL_TRAP (sysTrapHsSelector, hsSelCardAttrSet);

Err                     HsCardEventPost (Word cardNo, Word evtNum, Word evtParam)
                                SYS_SEL_TRAP (sysTrapHsSelector, hsSelCardEventPost);


Ptr*            HsPrvErrCatchListP (void)
                                SYS_SEL_TRAP (sysTrapHsSelector, hsSelPrvErrCatchListP);


Err                     HsPrefGet (Word /*HsPrefEnum*/ pref, void* bufP,
                                        DWord* prefSizeP)
                                SYS_SEL_TRAP (sysTrapHsSelector, hsSelPrefGet);

Err                     HsPrefSet (Word /*HsPrefEnum*/ pref, void* bufP,
                                        DWord prefSize)
                                SYS_SEL_TRAP (sysTrapHsSelector, hsSelPrefSet);


                        // This call behaves the same as the PalmOS DmGetNextDatabaseByTypeCreator
                        //   but can also be used in conjunction with the HsGetNextDBInit()
                        //   call to start the search at a particular card number or limit
                        //   the search to one card.
Err                     HsDmGetNextDBByTypeCreator (Boolean newSearch,
                                        DmSearchStatePtr stateInfoP, ULongtype, ULong creator,
                                        Boolean onlyLatestVers, UIntPtr cardNoP, LocalID* dbIDP)
                                SYS_SEL_TRAP (sysTrapHsSelector, hsSelDmGetNextDBByTypeCreator);


                        // Can be used to init the stateInfo for HsDmGetNextDBByTypeCreator()
                        //  so that it starts at a particular card number or limits the
                        //  search to one card. The flags are 1 or more of hsDmGetNextDBFlagXXX
Err                     HsDmGetNextDBInit (DmSearchStatePtr stateInfoP, DWord flags,
                                        Word cardNo)
                                SYS_SEL_TRAP (sysTrapHsSelector, hsSelDmGetNextDBInit);



                        // This is an advanced call for use by card flash utilities that
                        // change which card header to use AFTER the card is installed.
Err                     HsCardHdrUpdate (Word cardNo, void* newCardHdrP)
```


Copyright © 1999 by Handspring, Inc. All rights reserved.

```
                                SYS_SEL_TRAP (sysTrapHsSelector, hsSelCardHdrUpdate);



                        // Register an app event handler that can be triggered using
                        //  HsAppEventPost(). The evtRefCon will be passed to the
                        //  event handler when it is called.
                        // The event Handler should not rely on global variables since it may
                        //  be called while in the context of another app's action code.
                        //  Instead, pass in a pointer in evtRefCon to globals.
Err                     HsAppEventHandlerSet (HsAppEvtHandlerPtr procP, DWord evtRefCon)
                                SYS_SEL_TRAP (sysTrapHsSelector, hsSelAppEventHandlerSet);


                        // Post an event to be processed by the AppEventHandler procedure
                        //  registered with HsAppEventHandlerSet(). The evtNum param
                        //  can be from 0 to hsMaxAppEvent.
Err                     HsAppEventPost (Word evtNum, Word evtParam)
                                SYS_SEL_TRAP (sysTrapHsSelector, hsSelAppEventPost);



                        // Returns a pointer to a 4 byte area of global
                        //        memory that can be shared between the debugger stub's
                        //        communication support and run-time communication support.
                        // This can be used by USB for example to store the enumeration state.
                        // This is an exported stub into the HAL layer routine which actually
                        //    does the real work.
DWord*          HsUsbCommStatePtr (void)
                                SYS_SEL_TRAP (sysTrapHsSelector, hsSelUsbCommStatePtr);


                        // Patch a system trap for a card. This call should be used instead of
                        //  SysSetTrapAddress() by card setup utilities because it will
                        //  insure compatibility with HackMaster and any HackMaster
                        //  hacks that are installed.
                        // The implementation of the patch should use HsCardPatchPrevProc()
                        //   to get the address of the old routine to chain to:
                        //              HsCardPatchPrevProc (&oldProcP);
                        //              (*oldProcP)();
                        // IMPORTANT: Setup utilities are only allowed to install *ONE*
                        //  patch for each trapNum!
Err                     HsCardPatchInstall (Word trapNum, void* procP)
                                SYS_SEL_TRAP (sysTrapHsSelector, hsSelCardPatchInstall);

                        // Remove a patch of a system trap installed using HsSysPatchInstall().
                        // The 'creator' and 'id' must the same as passed to HsSysPatchInstall().
Err                     HsCardPatchRemove (Word trapNum)
                                SYS_SEL_TRAP (sysTrapHsSelector, hsSelCardPatchRemove);

                        // Macro to get the old routine address of a trap patched using
                        //  HsCardPatchInstall()
#define         HsCardPatchPrevProc(trapNum,oldProcPP)     \
                          FtrGet (hsFileCCardSetup, trapNum, (DWord*)oldProcPP)


                        // Called from interrupt routines to reset the auto-off timer
                        // and tell the system whether or not the user hardware (i.e. LCD)
                        // needs to be woken up or not. Note: The granularity of the
                        // stayAwakeTicks is only about 5*sysTicksPerSecond.
Err                     HsEvtResetAutoOffTimer (SDWord stayAwakeTicks, Boolean userOn)
                                SYS_SEL_TRAP (sysTrapHsSelector, hsSelEvtResetAutoOffTimer);



                        // Call to get or set the Unique ID seed field of a database
Err                     HsDmDatabaseUniqueIDSeed (Word cardNo, LocalID dbID,
                                  Boolean set, DWord* uniqueIDSeed)
                                SYS_SEL_TRAP (sysTrapHsSelector, hsSelDmDatabaseUniqueIDSeed);

                        // <chg 29-Jun-99 dia> Added extra credits string parameter.
void            HsAboutHandspringApp (UInt16 appCardNo, LocalID appDbId,
```


Copyright © 1999 by Handspring, Inc. All rights reserved.

```
                                Char* copyrightYearStrP, Char* extraCreditsStrP)
                              SYS_SEL_TRAP (sysTrapHsSelector, hsSelAboutHandspringApp);

// <chg 30-Jun-99 dia> Defined macros to make about box easier to call.
#define HsAboutHandspringAppWithYearId(yearId)                    \
        do
\
          {
\
                UInt16  appCardNo;
\
                LocalID appDbId;
\
                VoidHandyearStrH;
\
                Char*   yearStrP;
\

\
                yearStrH = DmGetResource (strRsc, yearId);               \
                yearStrP = MemHandleLock (yearStrH);                             \
                SysCurAppDatabase(&appCardNo, &appDbId);                 \
                HsAboutHandspringApp (appCardNo, appDbId, yearStrP, NULL);\
                MemPtrUnlock (yearStrP);
\
                DmReleaseResource (yearStrH);                                                    \
          }
\
        while (0)

#define HsAboutHandspringAppWithYearCredId(yearId, creditsId)\
        do
\
          {
\
                UInt16  appCardNo;
\
                LocalID appDbId;
\
                VoidHandyearStrH, extraStrH;                                                     \
                Char*   yearStrP;
\
                Char*   extraStrP;
\

\
                yearStrH = DmGetResource (strRsc, yearId);               \
                yearStrP = MemHandleLock (yearStrH);                             \
                extraStrH = DmGetResource (strRsc, creditsId);   \
                extraStrP = MemHandleLock (extraStrH);                           \
                SysCurAppDatabase(&appCardNo, &appDbId);                 \
                HsAboutHandspringApp (appCardNo, appDbId, yearStrP, extraStrP);\
                MemPtrUnlock (extraStrP);
\
                DmReleaseResource (extraStrH);                                                   \
                MemPtrUnlock (yearStrP);
\
                DmReleaseResource (yearStrH);                                                    \
          }
\
        while (0)


Byte            HsDmDatabaseIsOpen (UInt16 cardNo, LocalID dbID)
                              SYS_SEL_TRAP (sysTrapHsSelector, hsSelDmDatabaseIsOpen);

Byte            HsDmDatabaseIsProtected (UInt16 cardNo, LocalID dbID)
                              SYS_SEL_TRAP (sysTrapHsSelector, hsSelDmDatabaseIsProtected);

#endif
```


Copyright © 1999 by Handspring, Inc. All rights reserved.

Section III Cradle connector

The cradle connector provides serial communication with Handspring's family of handheld computers. The cradle connector, shown in Figure III.1) is located at the bottom of the handheld device. It is typically used for communicating with a PC or Mac for data synchronization; however, a variety of peripherals such as a keyboard, pager, or modem can also be interfaced to the handheld unit through this port.

Figure III.1: Cradle view

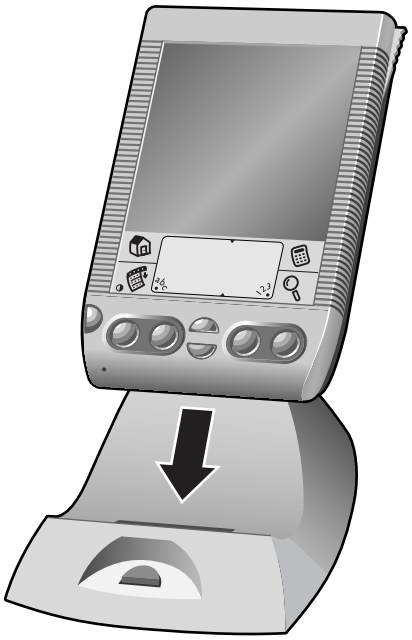

Copyright © 1999 by Handspring, Inc. All rights reserved.

Chapter 1 Functional Description

The Cradle Connector contains two serial buses that communicate with external devices: a USB bus and a simple serial bus. The high-speed USB interface is a slave-only interface, providing a payload bandwidth of up to 400 Kbps between a host PC or Mac and the handheld device. The serial port provides asynchronous capability to low-speed devices (9600 Kbps or less).

Figure III.1 shows how the Cradle Connector interfaces with the handheld.

Figure III.1: Cradle Connector Interface

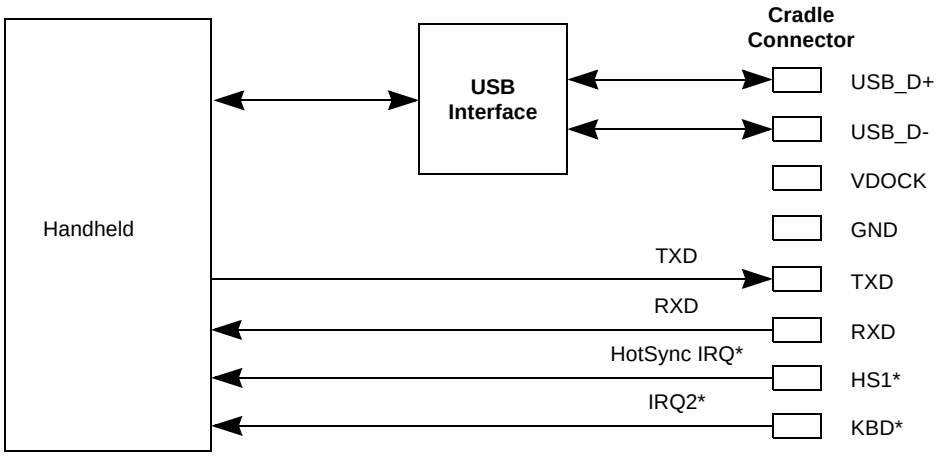

Copyright © 1999 by Handspring, Inc. All rights reserved.

Figure III.2: 3D View of Visor handheld bottom or cradle connector

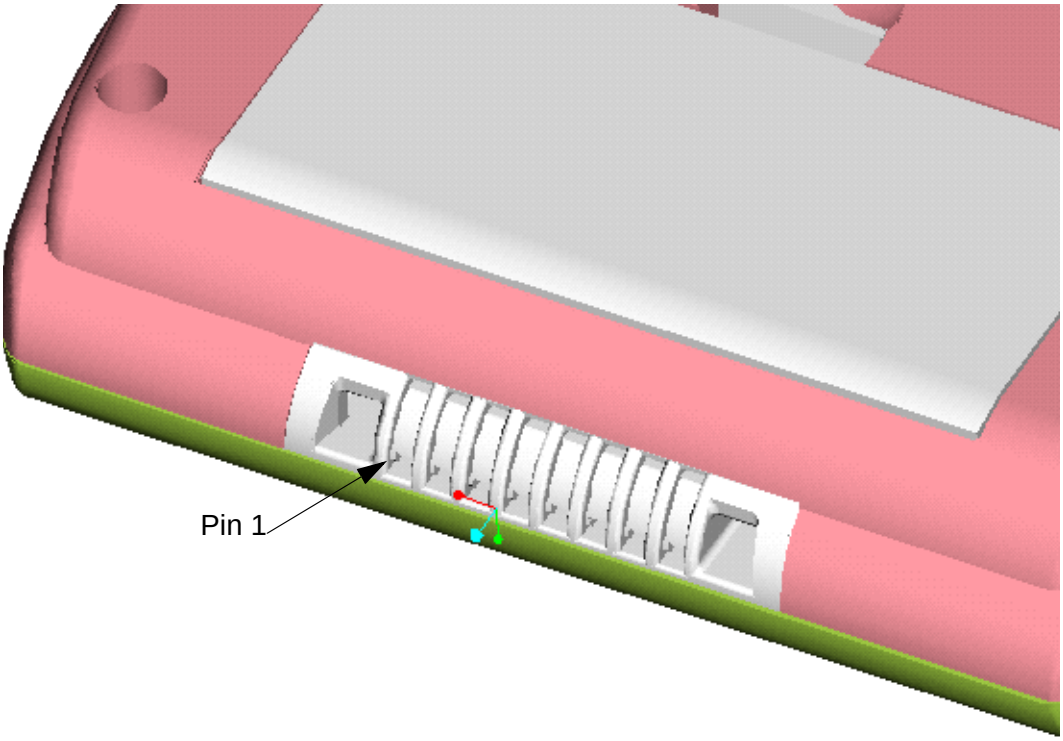

Figure III.3: 3D View of Eight-Pin cradle connector

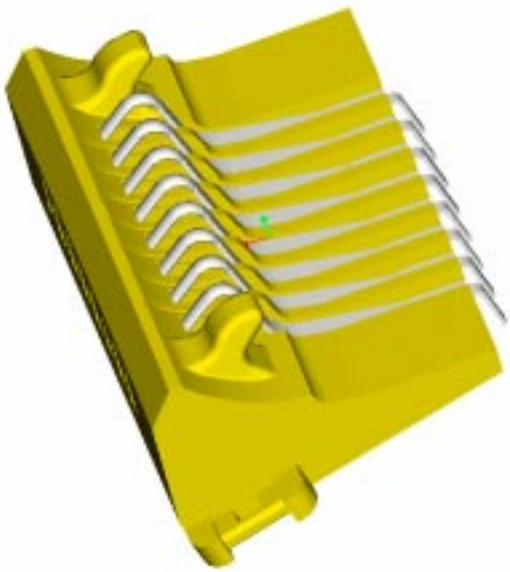

Copyright © 1999 by Handspring, Inc. All rights reserved.

Chapter 2 Signal Descriptions

This section defines the functions of the signals on the eight-pin Cradle Connector. Figure III.1 is a three-dimensional view of the Visor base, showing the eight pins.

Table III.1 lists the signals with their respective pin assignments. The signals are described in alphabetical order following the table. Active-low signals have a “*” at the end of their names.

Table III.1: Cradle Connector Pin Summary

Pin	Name	I/O/P[1]	Function
1	RXD	I	UART Receive Data, TTL level
2	KBD*	I	HotSync 2, ground for keyboard
3	HS1*	I	HotSync interrupt
4	GND	P	Ground
5	USB_D-	I/O	USB Data- differential signal
6	USB_D+	I/O	USB Data+ differential signal
7	VDOCK	P	Expansion module charging voltage
8	TXD	O	UART Transmit Data, TTL level, or Power

1. I = input, O = output, and P = power, with respect to the connector.

GND **Ground** **P**

GND is the ground connection to the handheld. This signal must be connected to the ground reference in the cradle or peripheral.

HS1* **HotSync Interrupt** **I**

This active-low interrupt pin is asserted low in order to initiate a HotSync with the handheld. In a cradle application, a push button would momentarily short this signal to GND to begin a HotSync.

KBD* **Keyboard Detect** **I**

This active-low pin is held low in order to indicate the presence of a keyboard. While KBD* is held low, the handheld expects keyboard data to be sent on the RXD pin. Refer to Chapter 3, “Keyboard Support via Remote UI,” on page III-6 for information on the keyboard data packet structure supported by the handheld.

Copyright © 1999 by Handspring, Inc. All rights reserved.

RXD **Receive Data** **O**

RXD connects directly to the Visor's CPU UART. **Note that RXD is TTL level, not RS-232 level**. This signal is used for asynchronous serial communications between the handheld and a cradle or peripheral. RXD is an input to the handheld and an output from a cradle or peripheral.

TXD **Transmit Data** **I**

TXD connects directly to the CPU's UART. **Note that TXD is TTL level, not RS-232 level**. This signal is used for asynchronous serial communications between the handheld and a cradle or peripheral. TXD is an output from the handheld and an input to a cradle or peripheral. This pin provides up to 3 mA maximum at 3.0 V when KBD* is asserted for low-power peripherals, such as keyboards.

USB_D+ **USB Data+** **I/O**

USB_D+ is the positive signal in the USB differential pair. This signal and USB_D- implement the USB signaling protocol for communicating with a USB host, such as a PC or a Mac.

USB_D- **USB Data-** **I/O**

This signal is the negative signal in the USB differential pair. This signal and USB_D+ implement the USB signaling protocol for communicating with a USB host, such as a PC or a Mac.

VDOCK **Cradle Power** **P**

This pin provides a high-voltage charging supply to the module when the handheld is placed into a special charging dock. The handheld passes this charging supply from a pin on its cradle connector through to pins on the Springboard Expansion module connector. Typically this supply is used to recharge batteries integrated into the expansion module.

For developers who want to use this pin, please contact Developer Support at DevSupport@handspring.com to verify its availability on future products.

Copyright © 1999 by Handspring, Inc. All rights reserved.

Chapter 3 Keyboard Support via Remote UI

The handheld platform supports character input from an external keyboard or pen-based device through the Cradle Connector located at the bottom of the handheld device. Pin 2 of the eight-pin Cradle Connector is the “keyboard detect” pin (KBD*). Grounding this pin indicates to the handheld processor that:

1. A keyboard or other remote UI device is present on the Cradle Connector, and
2. Incoming serial data packets on RXD (pin 1 on the Cradle Connector) should be interpreted as described by this document.

Note that the Cradle Connector does not include hardware signaling for buffer overflow conditions within the handheld device. Therefore the maximum recommended serial transfer speed to the handheld device is limited to 9600 kbps.

Remote UI is supported in all existing versions of PalmOS; for more information please see the *PalmOS Programmer’s Companion* at http://www.palm.com/devzone/docs.html.

3.1 Remote UI Packet Description

As long as pin 2, KBD*, on the Cradle Connector is held low, the handheld will receive incoming data packets on RXD and interpret them as Remote UI Packets. Remote UI Packets have three sections: a header, a body, and a CRC as shown in Figure III.1.

Figure III.1: Remote UI Packet

Header	Body	CRC	
10	16	2	# of bytes

The Remote UI Packet structure is flexible enough to support remote input from a variety of devices, but for software simplification, most of these fields can be hardcoded for keyboard-specific input.

Copyright © 1999 by Handspring, Inc. All rights reserved.

Table III.1 describes in detail the fields in the header, body, and CRC sections.

Table III.1: Remote UI Packet Fields

Field	Data Length (in Bytes)	Parameter Name	Value	Comment
Header Fields				
1	2	signature1	0xBEEF	Indicates serial link packet.
2	1	signature2	0xED	Indicates serial link packet.
3	1	dest	0x02	Indicates remote UI serial link packet.
4	1	src	0x02	Indicates remote UI serial link packet. Typically used as “return address” for response messages. Not required for keyboard input.
5	1	type	0x00	Indicates system packet type to the handheld.
6	2	bodySize	calculated	Size of body in bytes.
7	1	transactionID	calculated	Increment by one for each new message. Not required for keyboard input (will not be checked).
8	1	checksum	calculated	8-bit sum of header fields NOT including this field.
Data Fields				
9	1	command	0x0D	Indicates that input is a remote event.
10	1	filler	don’t care	For word alignment.
11	1	penDown	0 or 1	Indicates pen event. Reset to 0 for keyboard input.
12	1	filler	don’t care	For word alignment.
13	2	penX	0	Pen X coordinate. Reset to 0 for keyboard input.
14	2	penY	0	Pen Y coordinate. Reset to 0 for keyboard input.
15	1	filler	don’t care	For word alignment.
16	1	keyPress	0x01	Indicates a key has been pressed.
17	2	keyModifier	lookup	Modifier bits (shift, control, etc.) Bitmapped to this 16-bit field.
18	2	keyAscii	lookup	PalmOS keycodes – see **chars.h.**
19	2	keyCode	0x00	Reserved - Always set to 0.
CRC Field				
20	2	CRC	calculated	Computed using table method; see Section 3.4, “CRC Computation,” for more information. Uses big-endian byte ordering.

The following subsections provide more details on the contents of the header, body, and CRC.

3.2 Remote UI Packet Header

The Remote UI Packet header consists of eight fields as shown in Figure III.2.

Copyright © 1999 by Handspring, Inc. All rights reserved.

Figure III.2: Remote UI Packet Header

signature1	signature2	dest	src	type	bodySize	transactionID	checksum
2	1	1	1	1	2	1	1

The first two fields (`signature1` and `signature2`) contain a predefined code that indicates to the handheld that the incoming packet is a serial link packet.

The `dest` and `src` fields refer to the logical socket used for communication for remote UI. For keyboard applications, these fields are both set to 0x02.

The `type` field indicates that this packet is a system packet. It is hardcoded to 0x00.

The 16-bit `bodySize` field must contain the size of the body portion of the packet (in bytes). Do not include the size of the header or CRC bytes in this calculation.

The `transactionID` field is a running message counter, and is typically used for two-way communications over the serial port. Reply messages are tagged with the `transactionID` of the original message. Because the handheld does not send responses to keyboard packets, this field is not used and can be set to any value. However, other types of remote UI devices should increment `transactionID` by one for each packet sent.

The `checksum` value is a simple eight-bit addition of the bytes in the header. If a checksum mismatch occurs, the handheld searches all incoming data bytes for `signature1` in order to resynchronize to the sender. Sample code to generate a checksum is shown below.

```
/*********************************************************************
 * SlkChecksum          PrvCalcHdrChecksum(Checksum SlkChecksum, BytePtr bufP,
 *                      Long count);
 *
 * Computes the 16-bit checksum of bytes in a buffer.
 *
 * Arguments:
 *              SlkChecksum start               -- starting checksum value
 *              BytePtr bufP                    -- ptr to the data buffer
 *              Long count                      -- number of bytes in buffer
 *
 * Returns:
 *              8-bit checksum of the data
 *
 *********************************************************************/
static SlkPktHeaderChecksum
PrvCalcHdrChecksum(SlkPktHeaderChecksum start, BytePtr bufP, Long count)
{
        // The compiler produces the fastest code with a while(--count) loop...
        do {
                start += *bufP++;
                } while(--count);


        return( start );

}
```


Copyright © 1999 by Handspring, Inc. All rights reserved.

3.3 Remote UI Packet Body

Figure III.3 shows the Remote UI Packet body.

Figure III.3: Remote UI Packet Body

com-mand	filler	pen Down	filler	penX	penY	filler	key Press	key Modi-fier	keyAsc ii	key Code
1	1	1	1	2	2	1	1	2	2	2

The `command` field is always set to 0x0D, indicating that the packet contains remote event data. The `penDown`, `penX`, and `penY` fields define pen events; they are all reset to 0 for keyboard input. The `keyPress` field contains a flag that indicates a keypress has occurred on the remote UI device. The `keyModifier` and `keyAscii` fields define the keypress. The `keyCode` field is reserved for future purposes and should always be set to 0x0.

The `keyAscii` values supported by PalmOS are defined in the `chars.h` include file within the PalmOS source code. The `keyModifier` values are defined in the PalmOS source file `event.h`; they are also listed in Table III.2 below.

Table III.2: Key Modifiers for PalmOS

Key	KeyModifier Field Values
shiftKey	0x0001
capsLock	0x0002
numLock	0x0004
commandKey	0x0008
optionKey	0x0010
controlKey	0x0020
autoRepeatKey	0x0040
doubleTapKey	0x0080
poweredOnKey	0x0100
appEvtHookKey	0x0200
libEvtHookKey	0x0400

3.4 CRC Computation

The 16-bit cyclic redundancy check (CRC) value is calculated using the contents of both the header and the body. Note that the handheld device uses big-endian byte ordering for computing a CRC, so keyboards must generate CRCs using big-endian byte ordering. CRCs are computed using the table look-up method. Source code to generate CRCs is shown in the example below.

If the handheld detects a bad CRC, the packet is ignored, but no error response is sent back to the keyboard.

Copyright © 1999 by Handspring, Inc. All rights reserved.

```
/*************************************************************
* FUNCTION: Crc16CalcBlock
*
* DESCRIPTION: Calculate the 16-bit CRC of a data block using the table lookup method.
*
* PARAMETERS:
*               bufP                            -- pointer to the data buffer;
*               count                           -- the number of bytes in the buffer;
*               crc                             -- the seed crc value; pass 0 the first time
*                                               function is called, pass in new crc result
*                                               as more data is added to packet and crc is updated.
* RETURNS:
*               A 16-bit CRC for the data buffer.
*
*************************************************************/
Word Crc16Calc (VoidPtr bufP, Word count,  Word crc)
{
        registerBytePtr byteP   =  (BytePtr)bufP;
        WordPtr          crctt          =  (WordPtr)crctt_16;           // CRC translation table

//
// Calculate the 16 bit CRC using the table lookup method.
//
        if ( count )  {
                do  {
                        crc = (crc << 8) ^ crctt[ (Byte)((crc >> 8) ^ *byteP++) ];
                } while ( --count );
        }

        return( crc & 0xffff );
}

// This is the lookup table used when performing the 16-bit CRC calculation.  //

static Word crctt_16[ 256 ] =
{

0x0000, 0x1021, 0x2042, 0x3063, 0x4084, 0x50A5, 0x60C6, 0x70E7,
0x8108, 0x9129, 0xA14A, 0xB16B, 0xC18C, 0xD1AD, 0xE1CE, 0xF1EF,
0x1231, 0x0210, 0x3273, 0x2252, 0x52B5, 0x4294, 0x72F7, 0x62D6,
0x9339, 0x8318, 0xB37B, 0xA35A, 0xD3BD, 0xC39C, 0xF3FF, 0xE3DE,
0x2462, 0x3443, 0x0420, 0x1401, 0x64E6, 0x74C7, 0x44A4, 0x5485,
0xA56A, 0xB54B, 0x8528, 0x9509, 0xE5EE, 0xF5CF, 0xC5AC, 0xD58D,
0x3653, 0x2672, 0x1611, 0x0630, 0x76D7, 0x66F6, 0x5695, 0x46B4,
0xB75B, 0xA77A, 0x9719, 0x8738, 0xF7DF, 0xE7FE, 0xD79D, 0xC7BC,
0x48C4, 0x58E5, 0x6886, 0x78A7, 0x0840, 0x1861, 0x2802, 0x3823,
0xC9CC, 0xD9ED, 0xE98E, 0xF9AF, 0x8948, 0x9969, 0xA90A, 0xB92B,
0x5AF5, 0x4AD4, 0x7AB7, 0x6A96, 0x1A71, 0x0A50, 0x3A33, 0x2A12,
0xDBFD, 0xCBDC, 0xFBBF, 0xEB9E, 0x9B79, 0x8B58, 0xBB3B, 0xAB1A,
0x6CA6, 0x7C87, 0x4CE4, 0x5CC5, 0x2C22, 0x3C03, 0x0C60, 0x1C41,
0xEDAE, 0xFD8F, 0xCDEC, 0xDDCD, 0xAD2A, 0xBD0B, 0x8D68, 0x9D49,
0x7E97, 0x6EB6, 0x5ED5, 0x4EF4, 0x3E13, 0x2E32, 0x1E51, 0x0E70,
0xFF9F, 0xEFBE, 0xDFDD, 0xCFFC, 0xBF1B, 0xAF3A, 0x9F59, 0x8F78,
0x9188, 0x81A9, 0xB1CA, 0xA1EB, 0xD10C, 0xC12D, 0xF14E, 0xE16F,
0x1080, 0x00A1, 0x30C2, 0x20E3, 0x5004, 0x4025, 0x7046, 0x6067,
0x83B9, 0x9398, 0xA3FB, 0xB3DA, 0xC33D, 0xD31C, 0xE37F, 0xF35E,
0x02B1, 0x1290, 0x22F3, 0x32D2, 0x4235, 0x5214, 0x6277, 0x7256,
0xB5EA, 0xA5CB, 0x95A8, 0x8589, 0xF56E, 0xE54F, 0xD52C, 0xC50D,
0x34E2, 0x24C3, 0x14A0, 0x0481, 0x7466, 0x6447, 0x5424, 0x4405,
0xA7DB, 0xB7FA, 0x8799, 0x97B8, 0xE75F, 0xF77E, 0xC71D, 0xD73C,
0x26D3, 0x36F2, 0x0691, 0x16B0, 0x6657, 0x7676, 0x4615, 0x5634,
0xD94C, 0xC96D, 0xF90E, 0xE92F, 0x99C8, 0x89E9, 0xB98A, 0xA9AB,
0x5844, 0x4865, 0x7806, 0x6827, 0x18C0, 0x08E1, 0x3882, 0x28A3,
0xCB7D, 0xDB5C, 0xEB3F, 0xFB1E, 0x8BF9, 0x9BD8, 0xABBB, 0xBB9A,
0x4A75, 0x5A54, 0x6A37, 0x7A16, 0x0AF1, 0x1AD0, 0x2AB3, 0x3A92,
0xFD2E, 0xED0F, 0xDD6C, 0xCD4D, 0xBDAA, 0xAD8B, 0x9DE8, 0x8DC9,
0x7C26, 0x6C07, 0x5C64, 0x4C45, 0x3CA2, 0x2C83, 0x1CE0, 0x0CC1,
0xEF1F, 0xFF3E, 0xCF5D, 0xDF7C, 0xAF9B, 0xBFBA, 0x8FD9, 0x9FF8,
0x6E17, 0x7E36, 0x4E55, 0x5E74, 0x2E93, 0x3EB2, 0x0ED1, 0x1EF0
};
```


Copyright © 1999 by Handspring, Inc. All rights reserved.

3.5 Remote UI Packet Example

The following example shows a hex dump of a packet representing the keystroke ‘a’ (lowercase ‘a’):

```
BE   EF   ED   02   02   00   00   10
02   B0   0D   CC   00   CC   00   00
00   00   01   CC   00   00   00   61
00   00   2C   D8
```

Table III.3 categorizes the above data into the respective packet fields.

Table III.3: Packet Example Breakdown

Header	
BE EF	signature1
ED	signature2
02	dest
02	src
00	type
0010	bodySize
02	transactionID
B0	checksum
Body	
0D	command
CC	filler
00	penDown
CC	filler
00 00	penX
00 00	penY
01	keyPress
CC	filler
00 00	keyModifier
00 61	keyAscii
00 00	keyCode
Checksum	
2C D8	CRC

For more information, refer to the Serial Link Protocol section in the PalmOS Programmer’s Companion, available at the Palm developer’s website at http://www.palm.com/devzone/.

Copyright © 1999 by Handspring, Inc. All rights reserved.

Copyright © 1999 by Handspring, Inc. All rights reserved.

Section IV Development Tools

All modules must have a ROM on them that identifies the module and includes the software for it. Handspring provides the Palm-MakeROM tool for creating a file with the module's ROM image. This file can then be used to create a ROM for the module.

The beginning of a module ROM has a header structure that contains the name of the module, the manufacturer's name, the version number of the module, the total size of the ROM, etc. Besides the module header, the ROM contains one or more PalmOS applications or other types of databases. Modules that include special hardware usually include a setup utility; some modules may also include a welcome application. The PalmOS applications that are passed to Palm-MakeROM are standard PalmOS .PRC files that can be built using any of the standard PalmOS development tools including those from Metrowerks or the Handspring PalmOS GNU tools.

The Palm-MakeROM utility is a command-line based tool that accepts parameters identifying the information to store in the module header, as well as a list of files that are PalmOS databases to include in the ROM image. This tool is quite powerful and has many options, but most developers will only need to know about the options described here. For a full list of options, enter the "`-help`" option of the tool.

Below is an example command line to build a module ROM with two applications on it. For a sample makefile that builds a module ROM, see `<InstallDir>/PalmTools/../../Tools/Samples/CardROM/Build/Makefile`.

```
Palm-MakeROM -op create                     \
    -hdr 0x08000000                         \
    -chName "SampleROMCard"                 \
    -chManuf "Handspring, Inc."             \
    -chVersion 0x0100                       \
    -romName "ROM Store"                    \
    -romBlock 0x08000000 0x00010000         \
    -chRomTokens 0x0800FF00 0x0100          \
    -tokStr HsAT 200                        \
    -romDB "WelcomeApp.prc"                 \
    -romDB "MyApp.prc"                      \
    -o CardROM.bin
```

This command line builds a ROM image file called "`CardROM.bin`" with a module header and two applications in it: `WelcomeApp.prc` and `MyApp.prc`.

Copyright © 1999 by Handspring, Inc. All rights reserved.

Table IV.1 describes each of the command line parameters.

Table IV.1: Command Line Parameters

Parameter	Description
-hdr <hdrOffset>	The offset from the base of the module to the module header. Must be 0x08000000 for all Handspring removable modules. This offset, added to the removable module's assigned logical base address in PalmOS of 0x20000000, yields the address of the module's ROM at 0x28000000.
-chName <cardName>	The ASCII name of the module. Can be up to 31 characters in length. This name must be registered with Handspring via the developer support web site.
-chManuf <manufName>	The name of the manufacturer of the module. Can be up to 31 characters in length. This name must also be registered with Handspring.
-chVersion <version>	The 16-bit version number of the module. This value is for your purposes only and can be any format. You should always increase the value with subsequent versions of the module. A typical use is to store the major version in the high byte and the minor version in the low byte.
-chRomTokens <offset> <size>	The offset and size of the ROM token area on the module. This area is used to store data specified in the '`-tokStr`' parameter. The <offset> should be set to the end of the ROM minus space for the tokens themselves. In the above example, the ROM offset is at 0x08000000 and its size is 0x10000 (64K), so the ROM tokens are put at 0x08000FF00 with a size of 0x100.
-romName <romName>	The name of the ROM to be stored on the module. This parameter is for descriptive purposes only and can be any name up to 31 characters long.
-romBlock <offset> <size>	The offset and size of the ROM area on the module relative to the module base address. The <offset> must be 0x08000000 for all Handspring modules. The size is the total size of the formatted ROM area used by the Palm-MakeROM tool, which can be less than or equal to the size of the ROM chip itself.
-romDB <prcName>	The name of a PalmOS .PRC file to include in the ROM image. This option can be repeated for every .PRC file included in the ROM image.

-tokStr <id> <value>	The ID and value of a ROM token to be placed in the ROM token area specified by the `-chRomTokens` option. This option can be repeated for every ROM token that needs to be included. The ID must be a string of four characters. The value can be any number of characters long.
	
	All Handspring removable modules contain an 'HsAT' token with a value specifying the required access time of the chip selects in nanoseconds. For modules without this value, the chip select access time will be set to the slowest possible value allowed by the base unit hardware. For example:
	
	`-tokStr HsAT 200`
	
	Optionally, you can also include an 'HsWR' ROM token. The presence of this token (the value is ignored) tells the system to launch the module welcome application on the module if the module is inserted during a soft or hard reset. Normally, the module welcome application is not launched after a reset. For example:
	
	`-tokStr HsWR 1`

-o <outputName>	The name of the ROM output image file. This file is a binary output file image of the ROM with bytes in Motorola order (big-endian). Thus the first byte of the file corresponds to address 0 in the ROM (the high-order eight bits of the first word), the second byte corresponds to address 1 (the low-order eight bits of the first word), the third byte corresponds to address 2, etc.
-help	List all options to Palm-MakeROM.

Copyright © 1999 by Handspring, Inc. All rights reserved.

Section V Mechanical Information

This section provides mechanical information on the following:

- Visor handheld
- Springboard module with battery
- Springboard standard module
- Cradle base
- Cable connectors

Each chapter of this section includes a simple view and the associated file name of the mechanical drawings or model included in this kit. The format used are DWG, DXF, PRO-E or IGES.

Developer's Note: One of Handspring's goals is to provide future products that allow backward-compatibility with earlier Springboard module designs. However, take care when designing your Springboard modules. To maintain compatibility with existing Springboard modules, the Springboard expansion slot depth and width will remain constant; however, the surrounding molding may change in thickness or size. Please refer to the mechanical drawings included with this kit for the recommended non-encroachement areas. Also be aware that future Handpsring handheld designs may incorporate faster processors, so you must ensure that your module designs do not have any dependencies, such as wait states, that may be impacted by processor speed.

Copyright © 1999 by Handspring, Inc. All rights reserved.

Chapter 1 Visor handheld

The files for the mechanicals for the Visor handheld is: Visor.zip.

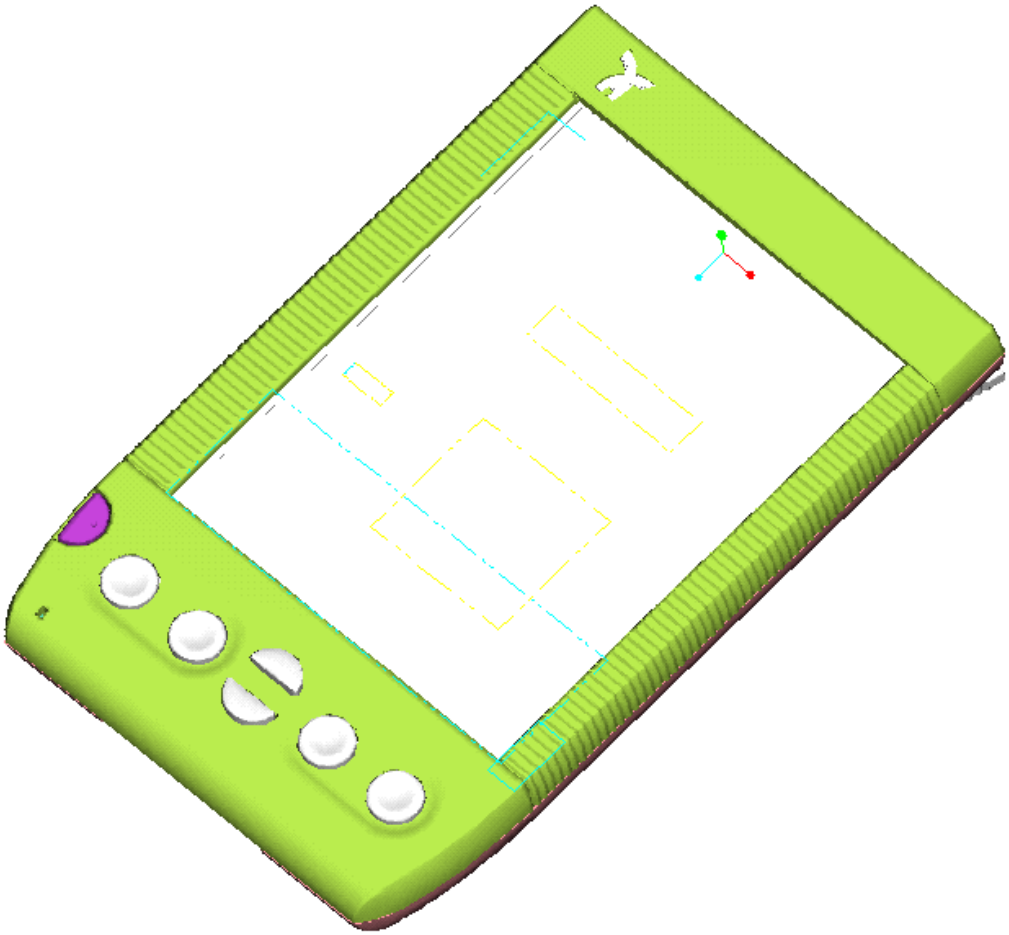

Copyright © 1999 by Handspring, Inc. All rights reserved.

Chapter 2 Springboard module with battery

The files for the mechanicals for the Springboard Modules with batteries is: BatterySpringboardModule.zip.

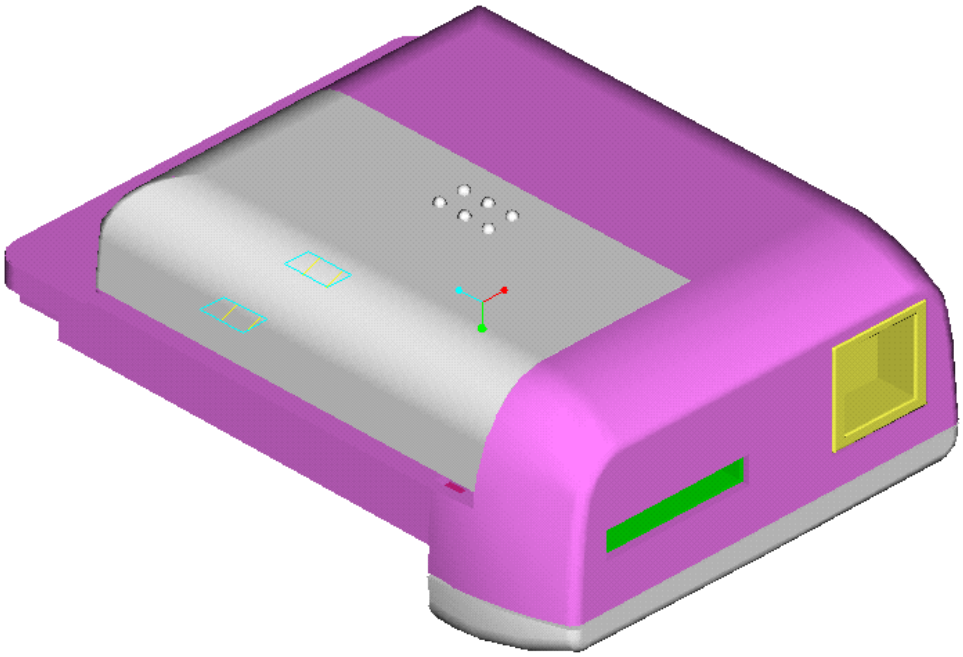

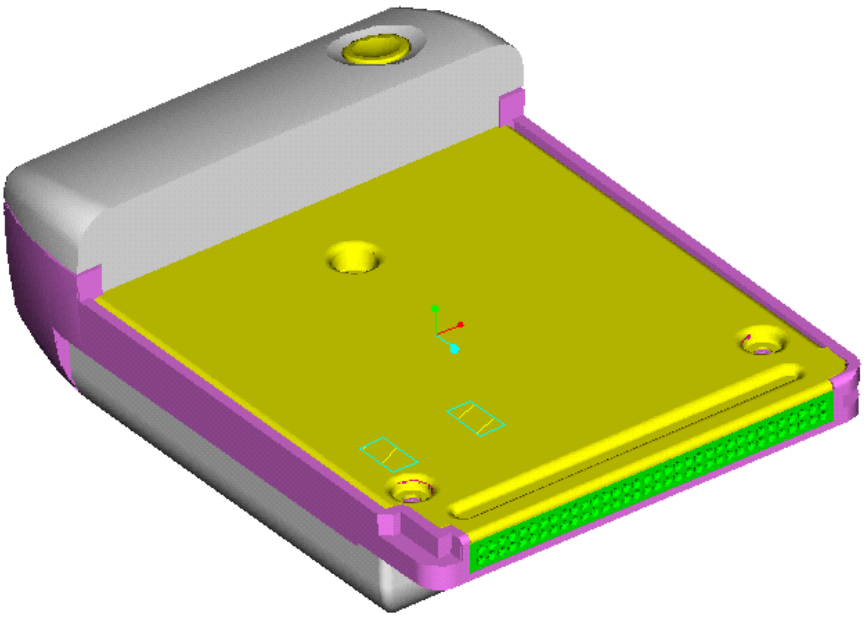

Copyright © 1999 by Handspring, Inc. All rights reserved.

Chapter 3 Springboard standard module

The files for the mechanicals for the Springboard memory module is: SpringboardStandard.zip.

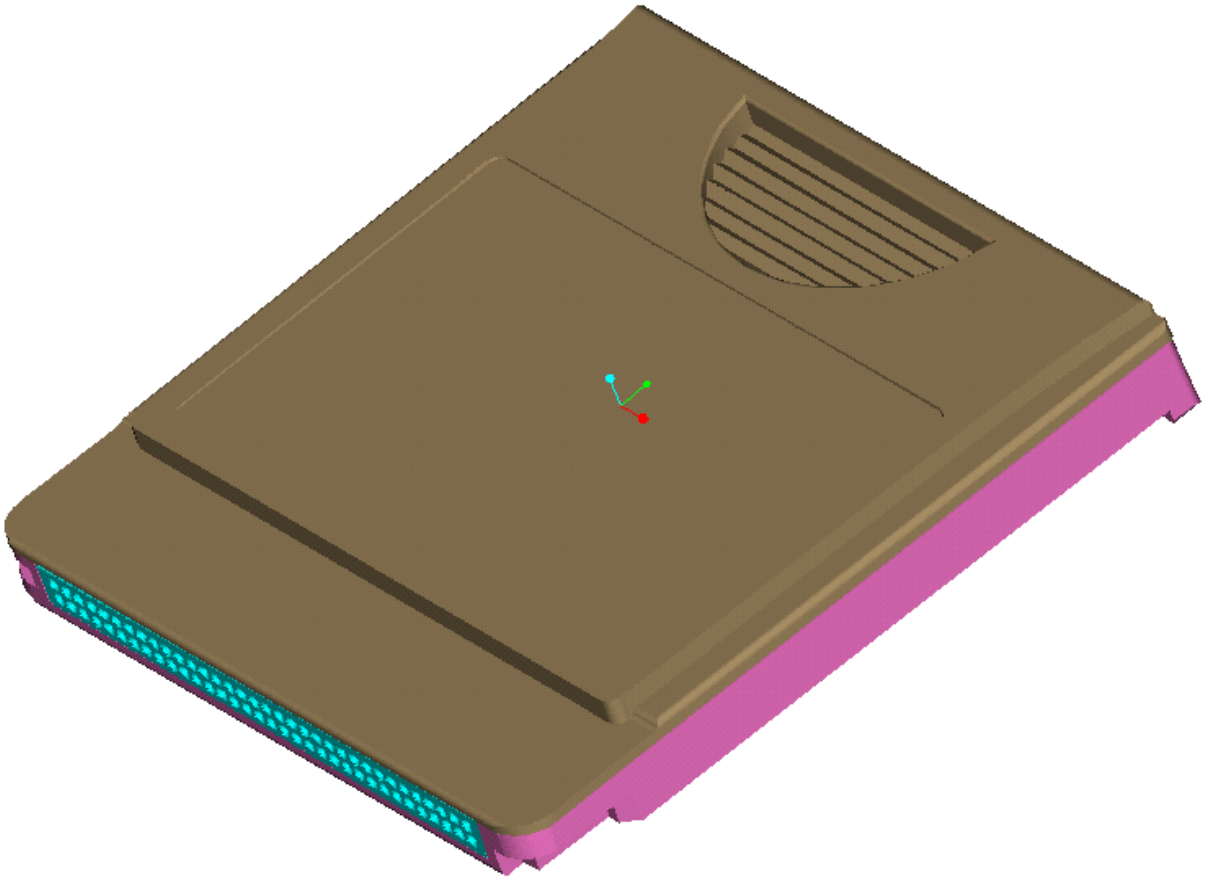

Copyright © 1999 by Handspring, Inc. All rights reserved.

Chapter 4 Cradle base

The files for Visor handheld cradle is: Cradle.zip.

Note that the cradle connector mechanical definition is part of this design file.

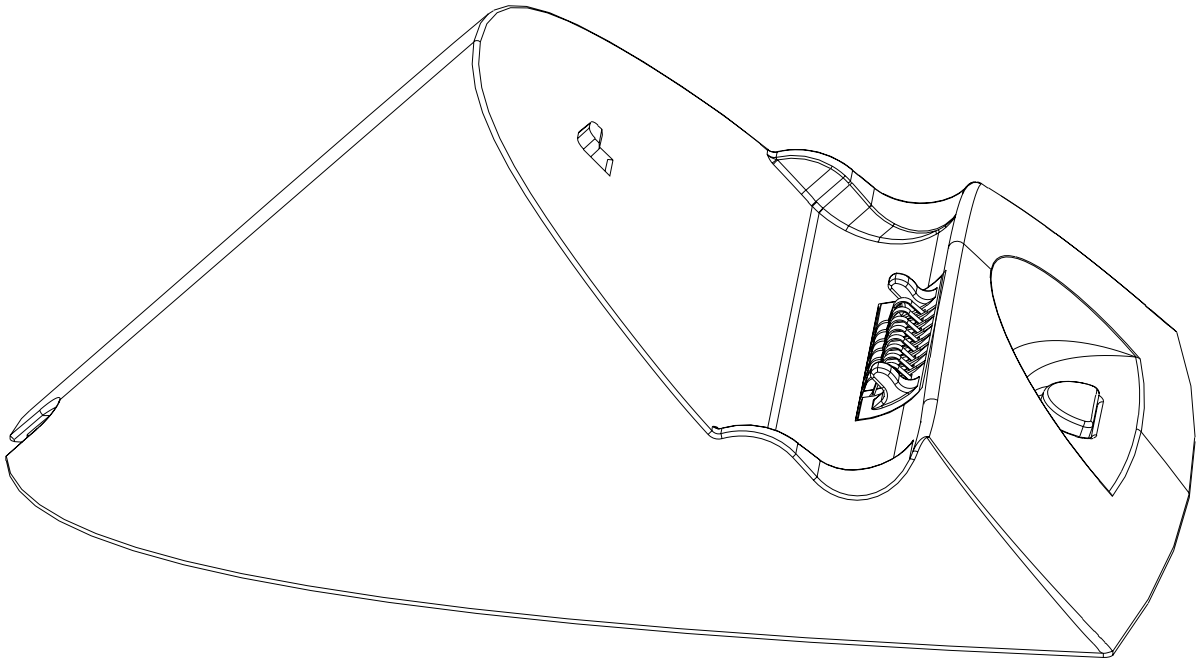

Copyright © 1999 by Handspring, Inc. All rights reserved.

Chapter 5 Cable connectors

The mechanical file for the different HotSync cable connectors (cradle, USB and 68 pin Springboard connector) is: connector.zip.

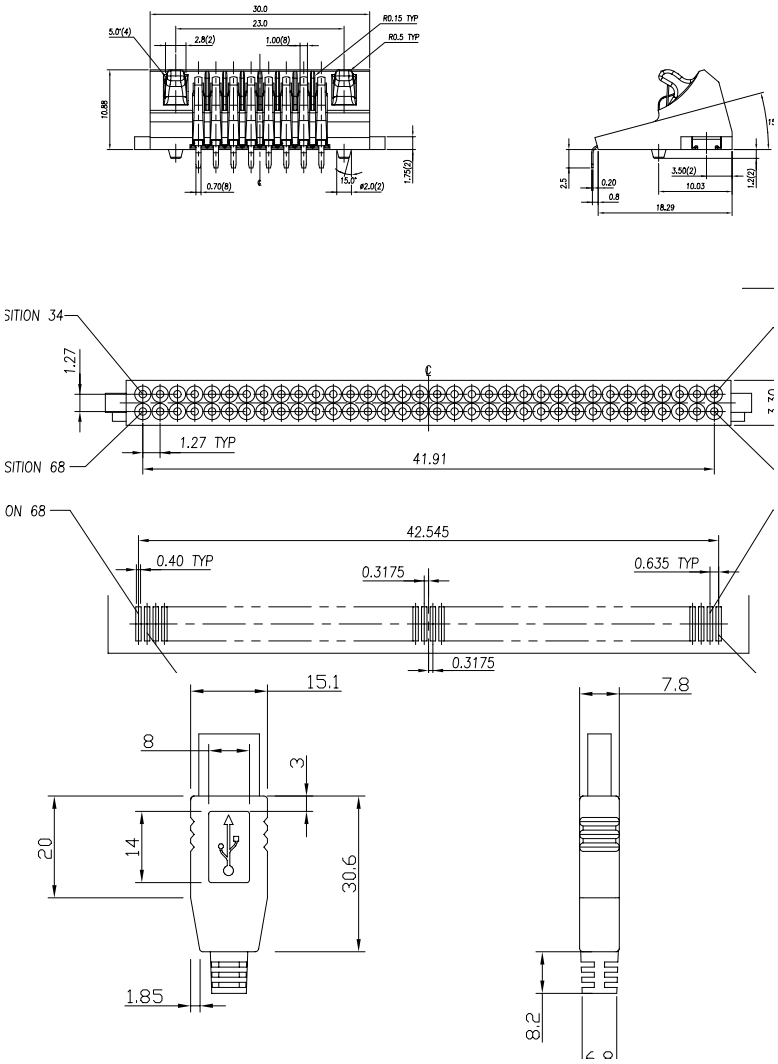

Copyright © 1999 by Handspring, Inc. All rights reserved.

Section VI Compatibility Testing

Developers of Springboard expansion modules are responsible for self-testing their products for compatibility with the following:

- The PalmOS
- Springboard-specific modifications to the PalmOS
- Visor hardware

All developers who wish to use the Springboard-compatible logo must ensure that their products conform to the software, electrical, and mechanical specifications outlined below.

The compatibility testing required varies depending on the type of Springboard expansion module you develop. There are three types of design that can be done for Handspring handheld computer and/or a Springboard expansion modules:

- PalmOS software applications
- Springboard-specific software applications
- Springboard hardware/software products

These three types are described in more detail in the following three chapters.

Copyright © 1999 by Handspring, Inc. All rights reserved.

Chapter 1 PalmOS Software Applications

PalmOS software applications are software-only applications. Handspring does not require any special testing or certification for such applications that are executed from internal memory. However, if the software is hosted in non-volatile memory on a Springboard module, the module itself must be tested for Springboard compatibility.

Copyright © 1999 by Handspring, Inc. All rights reserved.

Chapter 2 Springboard-Specific Software Applications

Springboard-specific software applications are software-only applications. These products run on a Springboard expansion module and use Handspring's proprietary software APIs to extend the PalmOS. Software that runs on a Springboard expansion module and uses calls to Handspring's APIs *must* undergo Springboard software compatibility testing, even if a pre-approved expansion module is used to host the software.

The items that need to be verified are include the following:

- The header file is a valid Springboard header
- All databases, preferences, or other variable data are written to Module 0
- The software meets Palm's requirements for PalmOS compatibility
- All auto-loading software (welcome apps) runs correctly upon insertion of the module
- Any patches or other system extensions loaded by the module are properly executed, do not interfere with the proper operation of the Visor handheld, and are properly removed from the handheld internal memory when the module is removed
- Software interrupts do not interfere with the proper functioning of the Visor unit
- The hsCardAttrCsbase attribute of the HsCardAttrGet() function is used properly
- All module identification information is correct and available
- The software conforms to all other specifications described elsewhere in this DK

Copyright © 1999 by Handspring, Inc. All rights reserved.

Chapter 3 Springboard-Specific Hardware/Software Applications

The Springboard-specific hardware/software applications plug into the Springboard expansion slot. The software included in these products must undergo all of the compatibility testing described in the previous chapter. In addition, the hardware modules must undergo mechanical and electrical self-certification to ensure that they conform to the specifications described in "Electrical and mechanical specifications" on page II-43.

These products must also be tested for conformity with the following mechanical requirements:

- The module must not intrude physically on the cradle, battery-door, IR port, or stylus holder
- The force required to insert or remove the card conforms to the requirements specified in "Electrical and mechanical specifications" on page II-43

Electrically, the module must be tested for conformity with the following requirements:

- The maximum operating current must not exceed 100 mA
- The standby current when LOWBAT* is asserted must be as low as possible, preferably below 100 µA.
- The module must not assert IRQ when LOWBAT* is asserted
- Under no circumstances should the module drain the Visor batteries and/or backup capacitor to such a degree that the handheld computer cannot maintain the integrity of its internal RAM.

Copyright © 1999 by Handspring, Inc. All rights reserved.

Section VII Handspring Licensing

HANDSPRING, INC.
Developer Agreement

PLEASE READ THE TERMS OF THE FOLLOWING AGREEMENT CAREFULLY. BY USING THE MATERIALS DISTRIBUTED WITH THIS AGREEMENT (THE "DEVELOPMENT KIT"), YOU ARE AGREEING TO BE BOUND BY THE TERMS AND CONDITIONS OF THIS AGREEMENT. IF YOU DO NOT AGREE TO THE TERMS AND CONDITIONS OF THIS AGREEMENT, PLEASE DO NOT USE THE DEVELOPMENT KIT. INSTEAD, PLEASE DESTROY ALL COPIES OF THE DEVELOPMENT KIT WHICH YOU MAY HAVE.

DEFINITION. "Springboard™ Enabled Products" are Handspring handheld computers that contain an external "slot" (the "Springboard™ slot") into which compatible third party hardware or software products can be inserted.

LICENSE GRANT. Subject to the terms and conditions of this Agreement, Handspring hereby grants to Developer a non-exclusive, non-transferable license under Handspring's intellectual property rights in the Development Kit (a) to use, reproduce and create derivative works of the materials provided by Handspring under this Agreement, solely internally in connection with Developer's development and manufacture of i) products which plug into the Springboard™ slot and meet Handspring's Springboard™ compatibility requirements ("Licensed Plug-Ins") or ii) accessory products (such as keyboards or reference manuals) for use with Springboard™ Enabled Products (such plug-in products and accessory products, collectively, "Licensed Products"); (b) to make, have made, use, distribute and sell Licensed Products directly or indirectly to end users for use with Springboard™ Enabled Products; and (c) to distribute the unmodified Development Kit in its entirety (including this Agreement) to third parties who agree to be bound by the terms and conditions of this Agreement.

LICENSE RESTRICTIONS. Except as otherwise expressly provided under this Agreement, Handspring grants and Developer obtains no rights, express, implied, or by estoppel, in any Handspring intellectual property, and Developer shall have no right, and specifically agrees not to (a) transfer or sublicense its license rights to any other person; (b) decompile, decrypt, reverse engineer, disassemble or otherwise reduce the software contained in the Development Kit to human-readable form to gain access to trade secrets or confidential information in such software, except and only to the extent such activity is expressly permitted by applicable law notwithstanding such limitation; (c) use or allow others to use the Development Kit, in whole or part, to develop, manufacture or distribute any products other than Licensed Products; (d) use or allow others to use the Development Kit, in whole or part, to develop, manufacture or distribute products (including Licensed Products) for use as a plug-in or accessory to any product other than Springboard™ Enabled Products; (e) use or allow others to use the Development Kit, in whole or part, to develop, manufacture or distribute any products incorporating an external or internal slot design; or (f) modify or create derivative works of any portion of the Development Kit.

Copyright © 1999 by Handspring, Inc. All rights reserved.

OWNERSHIP. Handspring is the sole and exclusive owner of all rights, title and interest in and to the Development Kit, including, without limitation, all intellectual property rights therein. Developer's rights in the Development Kit are limited to those expressly granted hereunder. Handspring reserves all other rights and licenses in and to the Development Kit not expressly granted to Developer under this Agreement. Subject to Handspring's rights in the Development Kit and the Springboard™ Enabled Products, Developer shall retain all rights in the Licensed Products developed by Developer in accordance with this Agreement.

COMPATIBILITY TESTING AND BRANDING. Prior to Developer's use of Handspring's Springboard™ compatibility trademark (the "Mark") in connection with a Licensed Plug-In, Developer shall conduct reasonable testing in accordance with Handspring's compatibility testing guidelines to ensure that the Licensed Plug-In conforms in all respects to Handspring's Springboard™ compatibility requirements (the "Compatibility Criteria"). Developer agrees that it will not use the Mark or make any statements claiming or implying compatibility with the Springboard™ slot in connection with any Licensed Plug-Ins which have not passed such compatibility testing and that, if Handspring determines that any Licensed Plug-In is not compliant with the Compatibility Criteria, Developer shall immediately cease use of the Mark in connection with that Licensed Plug-In. All goodwill generated by Developer's use of the Mark shall inure to Handspring's benefit.

Subject to the terms and conditions of this Agreement, Handspring hereby grants to Developer a non-exclusive, non-transferable license to use, subject to the guidelines set forth in Handspring's trademark policy and other applicable guidelines, (i) Handspring's Springboard™ compatibility trademark solely in connection with the marketing and sale of Licensed Plug-ins which comply with the Compatibility Criteria; and (ii) artwork, icons, logos, color schemes, and other industrial designs and designations of source provided by Handspring to Developer hereunder solely in connection with the marketing and sale of Licensed Products

DEVELOPER INDEMNIFICATION. Developer will defend at its expense any action brought against Handspring to the extent that it arises from or relates to Developer's development, manufacturing, marketing or distribution of Licensed Products, and Developer will pay any settlements and any costs, damages and attorneys' fees finally awarded against Handspring in such action which are attributable to such claim; provided, the foregoing obligation shall be subject to notifying Developer promptly in writing of the claim, giving it the exclusive control of the defense and settlement thereof, and providing all reasonable assistance in connection therewith. Notwithstanding the foregoing, Developer shall have no liability for any claim of infringement to the extent required by compliance with the Compatibility Criteria.

WARRANTY DISCLAIMER. HANDSPRING MAKES NO WARRANTIES, EITHER EXPRESS OR IMPLIED, AS TO ANY MATTER WHATSOEVER, AND SPECIFICALLY DISCLAIMS ALL WARRANTIES OR CONDITIONS OF MERCHANTABILITY, NONINFRINGEMENT, OR FITNESS FOR ANY PARTICULAR PURPOSE.

LIMITATION OF LIABILITY. EXCEPT FOR BREACHES OF THE SECTIONS ENTITLED "LICENSE GRANT", OR "LICENSE RESTRICTIONS", IN NO EVENT WILL EITHER PARTY BE LIABLE TO THE OTHER FOR LOST PROFITS, LOST BUSINESS, OR ANY CONSEQUENTIAL, EXEMPLARY OR INCIDENTAL DAMAGES ARISING OUT OF OR RELATING TO THIS AGREEMENT, REGARDLESS OF WHETHER BASED IN CONTRACT OR TORT, EVEN IF ADVISED OF THE POSSIBILITY OF SUCH DAMAGES.

Copyright © 1999 by Handspring, Inc. All rights reserved.

TERM AND TERMINATION. This Agreement shall remain in effect for the partial calendar year ending on the first March 31 following the effective date, and shall automatically renew for additional one (1) year terms ending on each subsequent March 31, except that the Agreement shall automatically terminate if either party materially breaches or is in default of any obligation hereunder or if either party provides notice of non-renewal by January 1. The parties agree that Handspring may provide notice by making the notice available in a manner similar to the manner in which the Development Kit was made available.

GENERAL. This Agreement will be governed by and construed and interpreted in accordance with the internal laws of the State of California, excluding that body of law applicable to conflict of laws. No waiver, amendment or modification of any provision hereof or of any right or remedy hereunder will be effective unless made in writing and signed by the party against whom such waiver, amendment or modification is sought to be enforced. No failure by any party to exercise, and no delay by any party in exercising, any right, power or remedy with respect to the obligations secured hereby will operate as a waiver of any such right, power or remedy. Neither this Agreement nor any right or obligation hereunder may be assigned or delegated by Developer (including by operation of law) without Handspring's express prior written consent, which consent will not be unreasonably withheld, and any assignment or delegation without such consent will be void. This Agreement will be binding upon and inure to the benefit of the successors and the permitted assigns of the respective parties hereto. If any provision of this Agreement is declared by a court of competent jurisdiction to be invalid, void, or unenforceable, the parties will modify such provision to the extent possible to most nearly effect its intent. In the event the parties cannot agree, then either party may terminate this Agreement on sixty (60) days notice. This Agreement constitutes the entire understanding and agreement of the parties hereto with respect to the subject matter hereof and supersedes all prior agreements or understandings, written or oral, between the parties hereto with respect to the subject matter hereof.

Copyright © 1999 by Handspring, Inc. All rights reserved.

Copyright © 1999 by Handspring, Inc. All rights reserved.

Section VIII Approved Vendor List

Handspring desires to make it easy for all developers to implement their ideas on our Visor handheld platform. Thus we are providing a list of Handspring-approved components for developers to use in their designs, if so chosen.

Table VIII.1: Approved Vendor List

Name	Contact	e-mail	Phone#	Web site
ATL	Tony Sass	tonys@atllink.com	801-434-0974	http://www.atllink.com/
Smart Modular	Dave Floriani	dave.floriani@smartm.com	510-624-8137	http://www.smartmodular.com/

Table VIII.2: Approved Components

Part Number	Description	Supplier	Specification
13-0006-00	Springboard's slot 68-pin female connector	ATL	13000600.pdf (.dwg)
31-0021-00	USB cable connector/overmold	ATL	31002100.pdf (.dwg)
13-0003-00	Cradle connector (also called dock connector)	ATL	13000300.pdf (.dwg)
TBD	2MB OTP- or Masked -ROM Springboard module	Smart Modular	N/A

Copyright © 1999 by Handspring, Inc. All rights reserved.

Copyright © 1999 by Handspring, Inc. All rights reserved.

Section IX Trademarks and Logos

Chapter 1 Overview

Section IX defines the specifications for the Springboard symbol and colors. It also provides a view of all available Springboard logos and Icons on the Visor handheld that are included in this kit. The source files for these logos and icons are in Logo_Icons.zip.

Here is a description of each files per folder.

Under the ”Logos Developers” folder:

- Color.springboard = color symbol with word springboard in GIF format
- color.tag.springboard = color symbol with words springboard compatible in GIF format
- SB.symbol = Springboard 's' in EPS format
- SB.color = Springboard logo in color with word Springboard in EPS format
- SBcom.color = Springboard logo in color with words Springboard compatible in EPS format

Under the ”Logos Developers\B&W” folder:

- SB Symbol.rev = Springboard 's' in reverse white in EPS format
- SB.B&W = Springboard logo with word springboard all in black in EPS format
- SBcom.B&W = Springboard logo with words springboard compatible all in black in EPS format
- BW.springboard = Springboard logo with word springboard all in black in GIF format
- BW.tag.springboard = Springboard logo with words springboard compatible all in black in GIF format

Under the “Icon” folder:

- lcd.area.eps

Copyright © 1999 by Handspring, Inc. All rights reserved.

SPRINGBOARD SYMBOL & COLOR

The Springboard symbol was designed to capture the modularity and flexibility of our Springboard technology. Shown here are the color and black-and-white versions of the symbol. As with our corporate symbol, never alter or reproportion the Springboard symbol in any way.

A COLOR: HS YELLOW (SIMILAR TO PMS 130)	
B COLOR: HS BLUE (SIMILAR TO PMS 288)	
C COLOR: HS GREEN (SIMILAR TO PMS 3415)	
D B&W: 100% BLACK	E MIN. SIZE: 1 PICA 9.5 PTS

Copyright © 1999 by Handspring, Inc. All rights reserved.

SPRINGBOARD SIGNATURES

The Springboard signature includes the symbol and the Springboard logotype used together in a specific orientation, as shown. A variation on this signature, the Springboard Compatible signature, also is featured.

As with our corporate signature, consistent use of the elements that comprise the Springboard and Springboard Compatible signatures, helps strengthen and reinforce our brand.

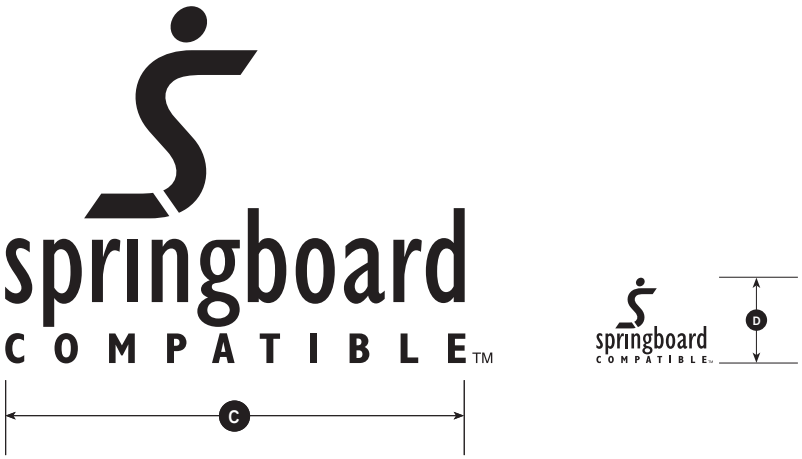

A SPRINGBOARD SIGNATURE	B MINIMUM SIZE: 2 PICAS 6 PTS
C SB COMPATIBLE SIGNATURE	D MINIMUM SIZE: 3 PICAS

Copyright © 1999 by Handspring, Inc. All rights reserved.

Chapter 2 Logos

Figure IX.1: Color.springboard.gif

Figure IX.2: Color.tag.springboard.gif

Copyright © 1999 by Handspring, Inc. All rights reserved.

Figure IX.3: SB.symbol.eps

Figure IX.4: SB.color.eps

Copyright © 1999 by Handspring, Inc. All rights reserved.

Figure IX.5: SBcom.color.eps

Figure IX.6: SB Symbol.rev.eps

Copyright © 1999 by Handspring, Inc. All rights reserved.

Figure IX.7: SB.B&W.eps

Figure IX.8: SBcom.B&W.eps

Copyright © 1999 by Handspring, Inc. All rights reserved.

Figure IX.9: BW.springboard.gif

Figure IX.10: BW.tag.springboard.gif

Copyright © 1999 by Handspring, Inc. All rights reserved.

Figure IX.11: lcd.area.eps

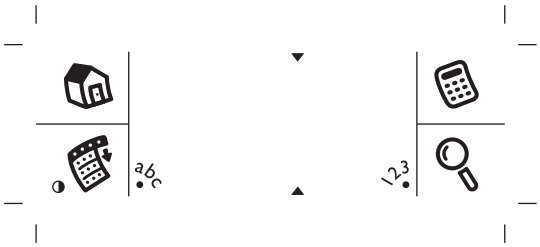

Copyright © 1999 by Handspring, Inc. All rights reserved.

Copyright © 1999 by Handspring, Inc. All rights reserved.