PowerScan® 7000BT SRI Linear Imager

Quick Reference Guide

PSC Inc
959 Terry Street
Eugene, Oregon 97402
Telephone: (541) 683-5700
Fax: (541) 345-7140
An Unpublished Work - All rights reserved. No part of the contents of this documentation or the procedures described therein may be reproduced or transmitted in any form or by any means without prior written permission of PSC Inc. or its wholly owned subsidiaries ("PSC"). Owners of PSC products are hereby granted a non-exclusive, revocable license to reproduce and transmit this documentation for the purchaser's own internal business purposes. Purchaser shall not remove or alter any proprietary notices, including copyright notices, contained in this documentation and shall ensure that all notices appear on any reproductions of the documentation.
Should future revisions of this manual be published, you can acquire printed versions by contacting your PSC representative. Electronic versions may either be downloadable from the PSC website (**www.psc.com**) or provided on appropriate media. If you visit our website and would like to make comments or suggestions about this or other PSC publications, please let us know via the “Contact PSC” page.

Disclaimer

PSC has taken reasonable measures to provide information in this manual that is complete and accurate, however, PSC reserves the right to change any specification at any time without prior notice.
PSC is a registered trademark of PSC Inc. The PSC logo is a trademark of PSC. All other trademarks and trade names referred to herein are property of their respective owners.

This product may be covered by one or more of the following patents: 4603262 • 4639606 • 4652750 • 4672215 • 4699447 • 4709369 • 4749879 4786798 • 4792666 • 4794240 • 4798943 • 4799164 • 4820911 • 4845349 • 4861972 • 4861973 • 4866257 • 4868836 • 4879456 • 4939355 • 4939356 • 4943127 • 4963719 • 4971176 • 4971177 • 4991692 • 5001406 • 5015831 • 5019697 • 5019698 • 5086879 • 5115120 • 5144118 • 5146463 • 5179270 • 5198649 • 5200597 • 5202784 • 5208449 • 5210397 • 5212371 • 5212372 • 5214270 • 5229590 • 5231293 • 5232185 • 5233169 • 5235168 • 5237161 • 5237162 • 5239165 • 5247161 • 5256864 • 5258604 • 5258699 • 5260554 • 5274219 • 5296689 • 5298728 • 5311000 • 5327451 • 5329103 • 5330370 • 5347113 • 5347121 • 5371361 • 5382783 • 5386105 • 5389917 • 5410108 • 5420410 • 5422472 • 5426507 • 5438187 • 5440110 • 5440111 • 5446271 • 5446749 • 5448050 • 5463211 • 5475206 • 5475207 • 5479011 • 5481098 • 5491328 • 5493108 • 5504350 • 5508505 • 5512740 • 5541397 • 5552593 • 5557095 • 5563402 • 5565668 • 5576531 • 5581707 • 5594231 • 5594441 • 5598070 • 5602376 • 5608201 • 5608399 • 5612529 • 5629510 • 5635699 • 5641958 • 5646391 • 5661435 • 5664231 • 5666045 • 5671374 • 5675138 • 5682028 • 5686716 • 5696370 • 5703347 • 5705802 • 5714750 • 5717194 • 5723852 • 5750976 • 5767502 • 5770847 • 5786581 • 5786585 • 5787103 • 5789732 • 5796222 • 5804809 • 5814803 • 5814804 • 5821721 • 5822343 • 5825009 • 5834708 • 5834750 • 5837983 • 5837988 • 5852286 • 5864129 • 5869827 • 5874722 • 5883370 • 5905249 • 5907147 • 5923023 • 5925868 • 5929421 • 5945670 • 5959284 • 5962838 • 5979769 • 6000619 • 6006991 • 6012639 • 6016135 • 6024284 • 6041374 • 6042012 • 6045044 • 6047889 • 6047894 • 6056198 • 6065676 • 6069696 • 6073849 • 6073851 • 6094288 • 6112993 • 6129279 • 6129282 • 6134039 • 6142376 • 6152368 • 6152372 • 6155488 • 6166375 • 6169614 • 6173894 • 6176429 • 6188500 • 6189784 • 6213397 • 6223986 • 6230975 • 6230976 • 6237852 • 6244510 • 6259545 • 6260763 • 6266175 • 6273336 • 6276605 • 6279829 • 6290134 • 6290135 • 6293467 • 6303927 • 6311895 • 6318634 • 6328216 • 6332576 • 6332577 • 6343741 • 6454168 • 6478224 • 6568598 • 6578765 • 6705527 • 6974084 • 6991169 •7051940 • AU703547 • D312631 • D313590 • D320011 • D320012 • D323492 • D330707 • D330708 • D349109 • D350127 • D350735 • D351149 • D351150 • D352936 • D352937 • D352938 • D352939 • D358588 • D361565 • D372234 • D374630 • D374869 • D375493 • D376357 • D377345 • D377346 • D377347 • D377348 • D388075 • D446524 • EP0256296 • EP0260155 • EP0260156 • EP0295936 • EP0325469 • EP0349770 • EP0368254 • EP0442215 • EP0498366 • EP0531645 • EP0663643 • EP0698251 • GB2252333 • GB2284086 • GB2301691 • GB2304954 • GB2307093 • GB2308267 • GB2308678 • GB2319103 • GB2333163 • GB2343079 • GB2344486 • GB2345568 • GB2354340 • ISR107546 • ISR118507 • ISR118508 • JP1962823 • JP1971216 • JP2513442 • JP2732459 • JP2829331 • JP2953593 • JP2964278 • MEX185552 • MEX187245 • RE37166 • Other Patents Pending

Statement of Agency Compliance

This device complies with part 15 of the FCC Rules. Operation is subject to the following two conditions: (1) this device may not cause harmful interference, and (2) this device must accept any interference received, including interference that may cause undesired operation.

FCC Class B Compliance Statement

The user is cautioned that changes or modifications not expressly approved by the part responsible for compliance could void the user's authority to operate the equipment.

This equipment has been tested and found to comply with the limits for a Class B digital device pursuant to part 15 of the FCC Rules. These limits are designed to provide reasonable protection against harmful interference in a residential installation. This equipment generates, uses, and can radiate radio frequency energy and, if not installed and used in accordance with the instructions, may cause harmful interference to radio communications. However, there is no guarantee that interference will not occur in a particular installation. If this equipment does cause harmful interference to radio or television reception, which can be determined by turning the equipment off and on, the user is encouraged to try to correct the interference by one or more of the following measures:

- Reorient or relocate the receiving antenna.
- Increase the separation between the equipment and receiver.
- Connect the equipment into an outlet on a circuit different from that to which the receiver is connected.
- Consult the dealer or an experienced radio or television technician for help.

FCC RF Radiation Exposure Statement

This equipment complies with FCC radiation exposure limits under Specific Absorption Rate (SAR) tests for portable devices operating closer than 20 cm to nearby persons, set forth in an uncontrolled environment. The PowerScan 7000BT handheld scanner has been demonstrated to meet these RF emissions safety limits.

Canadian Notice

This equipment does not exceed the Class B limits for radio noise emissions as described in the Radio Interference Regulations of the Canadian Department of Communications.

Le present appareil numerique n'emet pas de bruits radioelectriques depassant les limites applicables aux appareils numeriques de la classe B prescrites dans le Reglement sur le brouillage radioelectrique edicte par le ministere des Communications du Canada.

Power Supply

This product may require an external power supply (AC Adapter). Use only a PSC power supply approved exclusively for use with this product and is a model Listed Class 2 or Listed LPS power source which supplies power directly to the Base Station.

Solids and Water Protection

The Imager is rated as IEC 529-IP65. This nomenclature designates the degree of water and dust resistance, indicating the imager is totally protected against dust and is protected against low pressure jets of water from all directions - limited ingression permitted.

The Base Station is rated as IEC 529-IP54, indicating the unit is protected against dust, limited ingress (no harmful deposit) and is protected against water sprayed from all directions - with limited ingression permitted.

PSC INC. POWERSCAN® END USER LICENSE AGREEMENT

Notice to End User: The PSC Product you have acquired contains embedded Software, which is integral to the product's operation. This Software is being provided to you under license, subject to the terms and conditions of this Agreement. If you use the PSC Product, you will be deemed to have accepted the terms and conditions of this Agreement. If you do not intend to be bound to the terms of this Agreement, PSC is not willing to license the Software to you, you may not use the PSC Product or the Software, and you must contact the party from whom you acquired the PSC Product for instructions.

This End User Software License Agreement ("Agreement") is a legally binding agreement governing the licensing of the Software and Documentation by PSC Inc. and its wholly owned subsidiaries and affiliates ("PSC") to the entity or person who has purchased or otherwise acquired a PSC Product ("End User"). For purposes of this Agreement, any software that is associated with a separate end-user license agreement is licensed to you under the terms of that license agreement. PSC and End User hereby agree as follows:

1. Definitions.

1.1 "Documentation" means materials such as user's guides, program reference guides, quick reference guides, manuals, or similar materials associated with or related to the PSC Product, whether in printed, "online", or other form.

1.2 "Proprietary Information" means: (a) source code, object code, software, documentation, and any related internal design, system design, data base design, algorithms, technology, technical data or information, implementation techniques, and trade secrets related to the Software, (b) any other trade secrets marked appropriately or identified as proprietary or confidential, and (c) any information that End User, under the circumstances, should recognize as confidential. Proprietary Information does not include any information that the receiving party can establish was (1) in the public domain, (2) already in the receiving party's possession or rightfully known prior to receipt, (3) rightfully learned from a third party not in violation of any other's proprietary rights, or (4) independently developed without access to Proprietary Information.

1.3 "PSC Product" means the PSC Powerscan® series, Powerscan® Imager series, Powerscan® EP series, Powerscan® LR series, Powerscan® HD series, and/or Powerscan RF® series scanner and/or scanner/scale product, including all embedded Software in and all Documentation related to such product, which has been purchased or otherwise acquired by End User, whether obtained directly or indirectly from PSC.

1.4 "Software" means any software or computer programs of PSC or its third party licensors in machine readable form which is embedded in the PSC Product, whether obtained directly or indirectly from PSC, including any replacement, update, upgrade, enhancement or modification.

2. Scope Of License Granted.

2.1 PSC grants to End User a non-exclusive, non-transferable, perpetual license to use the Software, solely on the PSC Product in which it is embedded ("designated PSC Product"), in machine-readable form only, solely for End User's internal business purposes. This Agreement does not convey ownership of the Software to End User. Title to the Software shall be and remain with PSC or the third party from whom PSC has obtained a licensed right. As used in this Agreement, the term "purchase" or its equivalents when applied to the Software shall mean "acquire under license." End User is not entitled to receipt or use of the source code to any Software.

2.2 End User shall not copy, modify, decompile, disassemble, reverse engineer, or otherwise reproduce or remanufacture the Software, whether modified or unmodified, nor sell, assign, sublicense, distribute, lend, rent, give, or otherwise transfer the Software to any other person or organization, for purposes other than as expressly provided in this Agreement, without PSC's prior written consent.

3. Transfers, Support.

3.1 Any copying, installing, reproduction, remanufacture, reverse engineering, electronic transfer, or other use of the Software on other than the designated PSC Product will be a material breach of this Agreement. However, PSC may elect not to terminate this Agreement or the granted licenses, but instead may elect to notify End User that End User is deemed to have ordered and accepted a license for each breaching use. End User shall pay PSC the applicable list price for such licenses as of the date of such breach.

3.2 End User shall not sell, assign, sublicense, distribute, lend, rent, give, or otherwise transfer the PSC Product to any third party unless such third party agrees with PSC in writing to be bound by the terms and conditions of this Agreement. Any such transfer of the PSC Product absent such agreement shall be null and void.

3.3 End User may obtain support for Software from PSC at PSC's standard support fees and under PSC's standard support terms and conditions in effect at the time the support is requested.

4. Intellectual Property.

End User acknowledges that the Software constitutes valuable trade secrets of PSC or PSC's third party licensors and that the Software is protected by intellectual property laws and treaties. The license set forth in this Agreement does not transfer to End User any ownership of PSC's or its third party licensors' copyrights, patents, trademarks, service marks, trade secrets, or other intellectual property rights and End User shall have no right to commence any legal actions to obtain such rights. End User shall not remove, modify, or take any other action that would obscure any copyright, trademark, patent marking, or other intellectual property notices contained in or on the PSC Product.

5. Proprietary Information.

5.1 End User acknowledges that Proprietary Information is the confidential, proprietary, and trade secret property of PSC and PSC's third party licensors and End User acquires no right or interest in any Proprietary Informa-

tion.

5.2 End User shall not disclose, provide, or otherwise make available the Proprietary Information of PSC or its third party licensors to any person other than End User's authorized employees or agents who are under confidentiality agreement, and End User shall not use the Proprietary Information other than in conjunction with use of the PSC Product exclusively for End User's internal business purposes. End User shall take steps to protect the Proprietary Information no less securely than if it were End User's own intellectual property.

5.3 The provisions of this Proprietary Information Section shall survive and continue for five (5) years after the termination of this Agreement.

6. Limited Warranty.

6.1 PSC warrants that, under normal use and operation, the PSC Product will conform substantially to the applicable Documentation for the period specified in the Documentation. During this period, for all reproducible nonconformities for which PSC has been given written notice, PSC will use commercially reasonable efforts to remedy nonconformities verified by PSC. End User agrees to supply PSC with all reasonably requested information and assistance necessary to help PSC in remedying such nonconformities. For all defects reported to PSC within the warranty period, PSC's liability is limited to providing End User with one copy of corrections or responding to End User's problem reports according to PSC's standard assistance practices. PSC does not warrant that the product will meet End User's requirements or that use of the product will be uninterrupted or error free, or that PSC's remedial efforts will correct any nonconformance. This limited warranty does not cover any product that have been subjected to damage or abuse, whether intentionally, accidentally, or by neglect, or to unauthorized repair or unauthorized installation, and shall be void if End User modifies the product, uses the product in any manner other than as established in the Documentation, or if End User breaches any of the provisions of this Agreement.

6.2 EXCEPT AS PROVIDED IN THIS AGREEMENT, THE PSC PRODUCT IS PROVIDED "AS IS" AND PSC MAKES NO WARRANTIES OF ANY KIND, EXPRESS OR IMPLIED, WRITTEN OR ORAL, WITH RESPECT TO THE PRODUCT, AND SPECIFICALLY DISCLAIMS THE IMPLIED WARRANTIES OF MERCHANTABILITY AND FITNESS FOR A PARTICULAR PURPOSE.

7. Infringement.

7.1 PSC will defend End User against any claim in a lawsuit that the PSC Product furnished hereunder infringe a United States patent or copyright of a third party and PSC will pay any damages finally awarded against End User by a court of competent jurisdiction that are attributable to such claim or will pay End User's part of any settlement that is attributable to such claim, provided, that 1) End User notifies PSC promptly in writing of the claim, 2) PSC controls the defense or settlement of the claim, and 3) End User cooperates fully with PSC in such defense or settlement. All notices of a claim should be sent to PSC Inc., Legal Department, 111 SW Fifth Ave. Suite 4100, Portland, OR 97204-3644.

7.2 In the defense or settlement of any such claim, PSC may, at its option, 1) procure for End User the right to continue using the PSC Product, 2) modify the PSC Product so that it becomes non-infringing, 3) replace the PSC Product with an equivalent product not subject to such claim, or 4) provide End User an opportunity to return the PSC Product and receive a refund of the purchase price paid, less a reasonable allowance for use.

7.3 PSC shall have no liability to End User for claims of infringement based upon 1) the use of any PSC Product in combination with any product which PSC has not either furnished or authorized for use with such PSC Product 2) the use of any PSC Product designed, manufactured, or modified to the specifications of End User, or 3) End User's modification of the PSC Product without written authorization from PSC.

7.4 THE FOREGOING STATES PSC'S COMPLETE AND ENTIRE OBLIGATION CONCERNING CLAIMS OF PATENT, COPYRIGHT, OR OTHER INTELLECTUAL PROPERTY INFRINGEMENT, CANCELS AND SUPERCEDES ANY PRIOR AGREEMENTS, WHETHER ORAL OR WRITTEN, BETWEEN THE PARTIES CONCERNING SUCH CLAIMS, AND WILL NOT BE MODIFIED OR AMENDED BY ANY PAST, CONTEMPORANEOUS, OR FUTURE AGREEMENTS OR DEALINGS BETWEEN THE PARTIES, WHETHER ORAL OR WRITTEN, EXCEPT AS SET FORTH IN A FUTURE WRITING SIGNED BY BOTH PARTIES.

8. Limitation Of Liability.

EXCEPT AS PROVIDED IN SECTION 7, PSC SHALL NOT BE LIABLE FOR ANY CLAIMS AGAINST END USER BY ANY OTHER PARTY. IN NO EVENT SHALL PSC'S LIABILITY FOR DAMAGES, IF ANY, WHETHER BASED UPON CONTRACT, TORT (INCLUDING NEGLIGENCE), PRODUCT LIABILITY, STRICT LIABILITY, WARRANTY, OR ANY OTHER BASIS, EXCEED THE PRICE OR FEE PAID BY END USER FOR THE PSC PRODUCT. UNDER NO CIRCUMSTANCES SHALL PSC BE LIABLE TO END USER OR ANY THIRD PARTY FOR LOST PROFITS, LOST DATA, INTERRUPTION OF BUSINESS OR SERVICE, OR FOR ANY OTHER SPECIAL, CONSEQUENTIAL, CONTINGENT, INDIRECT, INCIDENTAL, PUNITIVE, EXEMPLARY, OR OTHER SIMILAR DAMAGES, EVEN IF PSC HAS BEEN ADVISED OF THE POSSIBILITY OF SUCH DAMAGES.

9. Government Restricted Rights; International Use.

9.1 Use, duplication, or disclosure of the Software by the U.S. Government is subject to the restrictions for computer software developed at private expense as set forth in the U.S. Federal Acquisition Regulations at FAR 52.227-14(g), or 52.227-19 or in the Rights in Technical Data and Computer Software clause at DFARS 252.227-7013(c)(1)(ii), whichever is applicable.

9.2 If End User is using the PSC Product outside of the United States, End User must comply with the applicable local laws of the country in which the PSC Product is used, with U.S. export control laws, and with the English language version of this Agreement. The provisions of the "United Nations Convention on International Sale of Goods" shall not apply to this Agreement.

10. Termination.

10.1 Either party may terminate this Agreement or any license granted under this Agreement at any time upon written notice if the other party breaches any provision of this Agreement.

10.2 Upon termination of this Agreement, End User immediately shall cease using any non-embedded software and shall return to PSC or destroy all non-embedded software covered by this Agreement, and shall furnish PSC with a certificate of compliance with this provision signed by an officer or authorized representative of End User. For embedded software, End User agrees to sign a waiver prepared by PSC concerning further use of the embedded Software. End User's resumed or continued use of the embedded Software after termi-

nation shall constitute End User's agreement to be bound by the terms and conditions of this Agreement for such use.

11. General Provisions.

11.1 Entire Agreement: Amendment. This document contains the entire agreement between the parties relating to the licensing of the Software and supersedes all prior or contemporaneous agreements, written or oral, between the parties concerning the licensing of the Software. This Agreement may not be changed, amended, or modified except by written document signed by PSC.

11.2 Notice. All notices required or authorized under this Agreement shall be given in writing, and shall be effective when received, with evidence of receipt. Notices to PSC shall be sent to the attention of Contract Administration, PSC Scanning Inc., 959 Terry Street, Eugene, OR 97402, or such other address as may be specified by PSC in writing.

11.3 Waiver. A party's failure to enforce any of the terms and conditions of this Agreement shall not prevent the party's later enforcement of such terms and conditions.

11.4 Governing Law; Venue:This Agreement and the rights of the parties hereunder shall be governed by and construed in accordance with the laws of the State of Oregon U.S.A, without regard to the rules governing conflicts of law. The state or federal courts of the State of Oregon located in either Multnomah or Lane counties shall have exclusive jurisdiction over all matters regarding this Agreement, except that PSC shall have the right, at its absolute discretion, to initiate proceedings in the courts of any other state, country, or territory in which End User resides, or in which any of End User's assets are located.

11.5 Attorneys' Fees. In the event an action is brought to enforce the terms and conditions of this Agreement, the prevailing party shall be entitled to reasonable attorneys' fees, both at trial and on appeal.

- END -

Software Product Policy

PSC reserves the right to ship its products with the latest version of software/firmware available. This provides our customers with the very latest in PSC software technology.

The only exception to this policy is when the buyer has a signed contract with PSC that clearly defines the terms and conditions for making software/firmware changes in products shipped to the buyer.

Customers Under Software Support

Customers that elect to subscribe to PSC Software Maintenance and Support Agreement will receive 30 days advance notification of: (1) the release of a new software version; and/or (2) discontinuation of any prior software version that will no longer be supported. PSC will provide maintenance for a fee that will assist customers in transitioning to the next software version. If a customer is currently using the software version being discontinued, the customer may elect to transition to any one of the newer versions, depending on the hardware in use.

To arrange for a Software Maintenance and Support Agreement please contact your PSC sales person.

Laser Cautions

The imager may contain a laser pointer (this is a value-added option), which is certified in the U.S. to conform to the requirements of DHHS/CDRH 21CFR Subchapter J for Class II and IEC 60825-1 for Class 2 products. Class II (2) products are not considered to be hazardous. Laser pointer models of the imager contain a Visible Laser Diode (VLD) at a wavelength of 655 nanometers and is designed so that there can be no human access to harmful levels of laser light during normal operation, user maintenance, or during prescribed service operations. See the Product Reference Guide (PRG) for laser pointer configuration information and bar codes.

CAUTION

Do not attempt to open or otherwise service any components in the optics cavity. Opening or servicing any part of the optics cavity by unauthorized personnel may violate laser safety regulations.

Table of Contents

Statement of Agency Compliance i
FCC Class B Compliance Statement i
FCC RF Radiation Exposure Statement i
Canadian Notice i
Power Supply i
Solids and Water Protection i
Software Product Policy iv
Customers Under Software Support iv
Laser Cautions iv
Getting Started 1
Installing the Battery Pack 1
Verifying Scanner Operation Before Linking to the Base Station 3
Connection 4
Linking the Scanner to a Base Station 5
Linking the Scanner to a Bluetooth Device 6
Battery Pack Charging and Maintenance 7
Programming 8
Interface Selection 9
Resetting the Standard Product Defaults 13
How to Scan 14
Troubleshooting 15
Troubleshooting the RF System 15
Troubleshooting the Scanner 16

Getting Started

Installing the Battery Pack

NOTE

To charge the Battery Pack, See “Battery Pack Charging and Maintenance” on page 7.

PSC recommends annual replacement of rechargeable battery packs to ensure maximum performance.

WARNING

Do not discharge the battery using any device except for the scanner. When the battery is used in devices other than the linear imager, it may damage the battery or reduce its life expectancy. If the device causes an abnormal current to flow, it may cause the battery to become hot, explode or ignite and cause serious injury.
Lithium-ion battery packs may get hot, explode or ignite and cause serious injury if exposed to abusive conditions. Be sure to follow the safety warnings listed below:

- **Do not place the battery pack in fire or heat.**
- **Do not connect the positive terminal and negative terminal of the battery pack to each other with any metal object (such as wire).**
- **Do not carry or store the battery pack together with metal objects.**
- **Do not pierce the battery pack with nails, strike it with a hammer, step on it or otherwise subject it to strong impacts or shocks.**
- **Do not solder directly onto the battery pack.**
- **Do not expose the battery pack to liquids, or allow the battery to get wet.**

In the event the battery pack leaks and the fluid gets into your eye, do not rub the eye. Rinse well with water and immediately seek medical care. If left untreated, the battery fluid could cause damage to the eye.

CAUTION

Always charge the battery at 32° – 113°F (0° - 45°C) temperature range.

Use only the authorized power supplies, battery pack, chargers, and docks supplied by your PSC reseller. The use of any other power supplies can damage the linear imager and void your warranty.

Do not disassemble or modify the battery. The battery contains safety and protection devices, which, if damaged, may cause the battery to generate heat, explode or ignite.

Do not place the battery in or near fire, on stoves or other high temperature locations.

Do not place the battery in direct sunlight, or use or store the battery inside cars in hot weather. Doing so may cause the battery to generate heat, explode or ignite. Using the battery in this manner may also result in a loss of performance and a shortened life expectancy.

Do not place the battery in microwave ovens, high-pressure containers or on induction cookware.

Immediately discontinue use of the battery if, while using, charging or storing the battery, the battery emits an unusual smell, feels hot, changes color or shape, or appears abnormal in any other way.

Orient the Battery Pack as shown in Figure 1, then push it into the scanner until the alignment pins engage and the unit snaps into place (the pins will not engage if the Battery Pack is incorrectly oriented). To remove the Battery Pack, push in on the release latches on either side of its base and pull it straight out of the scanner.

Figure 1. Battery Pack Installation & Removal

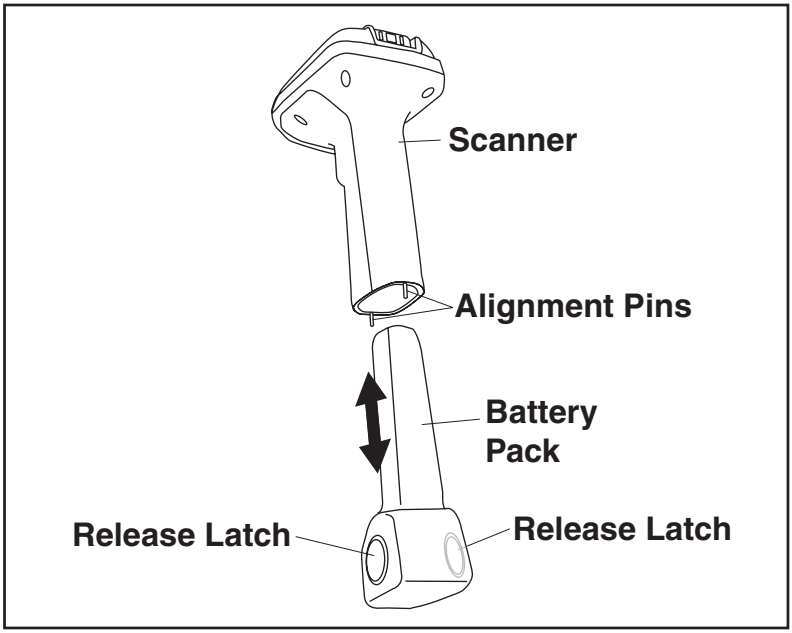

Verifying Scanner Operation Before Linking to the Base Station

Once a charged Battery Pack has been installed in the scanner, scan a good sample bar code of the symbology[1] type your scanner is programmed to read. If unsure how to do this, see the section on How to Scan in this manual. Tip: The part number bar code on the back cover of this manual is a Code 39 symbology sample.

The system may signal with one or a combination of indicators depending upon how the scanner and Base Station are programmed to respond (see LED and Beeper Indications for details). If your scanner fails to read a sample bar code of a symbology it is programmed to read, turn to the section titled, Troubleshooting.

1. To enable more bar code symbology types, reference the Product Reference Guide (PRG).

Connection

Figure 2 shows how to connect the Base Station to a terminal, PC or other host device. Turn off the host before connection and consult the manual for that equipment (if necessary) before proceeding.

Base Station Connection and Routing — Fully insert the Power Cable[1] and Interface (I/F) Cable connectors into their respective ports in the underside of the Base Station (see Figure 2). Alternatively, you can either loop the cables around the routing clips and back through the routing channel to the front of the Base Station as shown, or the cables can be fed directly out the back of the Base Station via the routing clips.

Figure 2. Connecting the Base Station

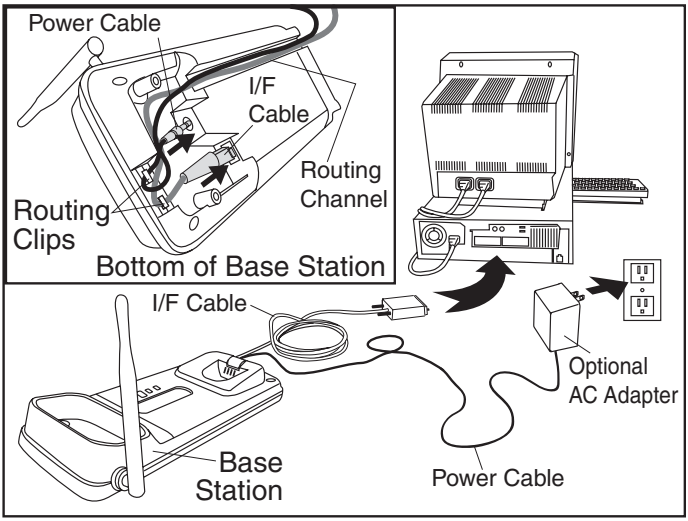

Host Connection — The interface type was specified at the time your scanner was ordered, however you should verify before connection that the scanner's cable type is compatible with your host equipment. Most connections plug directly into the host device as shown in Figure 3. Keyboard Wedge interface cables have a 'Y' connection where its female end mates with the male end of the cable from the keyboard and the remaining end at the keyboard port on the terminal/PC.

1. The AC Adapter (Power Cable) is an optional device used only if the host/terminal cannot by itself supply adequate power to drive the Base Station (via the interface cable).

Figure 3. Connecting to the Host

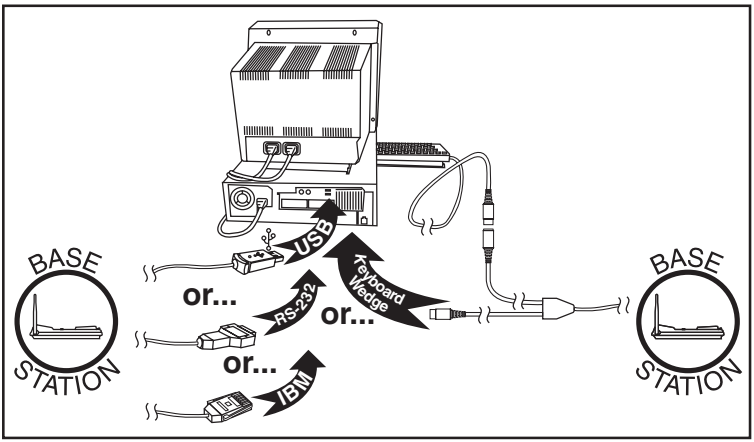

Optional Power Connection — If needed[1], plug the AC Adapter in to an approved AC wall socket with the cable facing downwards (as shown in Figure 2) to prevent undue strain on the socket.

Linking the Scanner to a Base Station

To link a scanner to a Base Station, press the Link Button on the Base Station (see Figure 4) for at least one second to place the base in "Link Mode"then scan the "Link to a Base Station" bar code below or the link bar code located on the Base Station itself using the scanner to be linked. Allow the system several seconds to create the association between the two units and exit Link Mode. A successful link is indicated by three ascending tones from the scanner. A "high-low-high-low" tone indicates the link attempt was unsuccessful. A single LED flash during this tone indicates no Base Station was discovered. Two green LED flashes during this tone indicates that more than one Base Station was discovered and the scanner did not link.

Link to a Base Station

1. The AC Adapter (Power Cable) is an optional device used only if the host/terminal cannot by itself supply adequate power to drive the Base Station (via the interface cable).

Figure 4. Labeling and Nomenclature

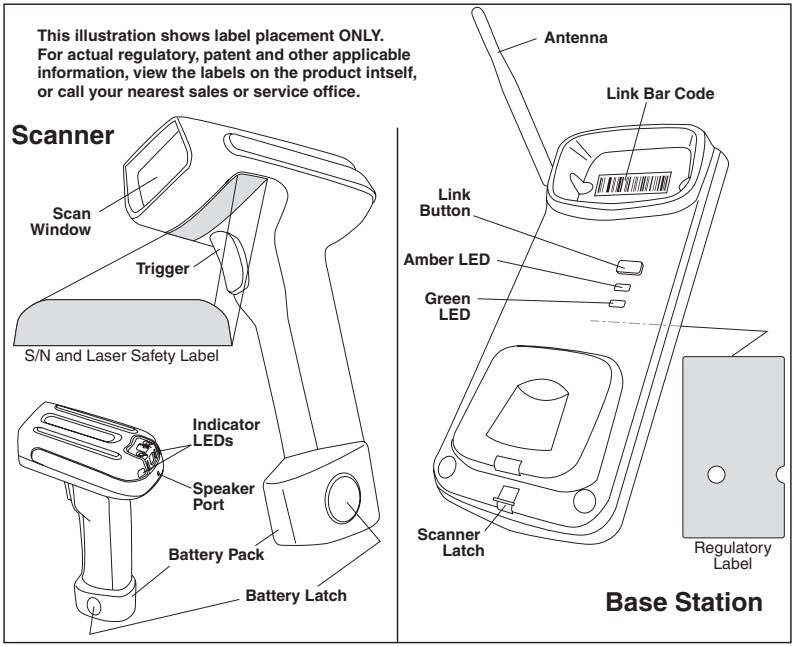

Linking the Scanner to a Bluetooth Device

A scanner can optionally be linked to a PC with a Bluetooth radio installed.

1. Ensure that the Bluetooth device and its driver are installed on the PC.
2. On the PC, open the control window for the Bluetooth device (usually called “My Bluetooth Places”). Follow the instructions for the Bluetooth device to disable the security setting for the Bluetooth serial port.
3. Scan the “Link to a PC” bar code below.

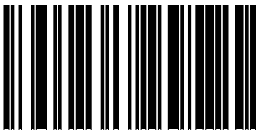

Link to a PC

4. On the PC, search for Bluetooth devices that are in range and select the “PSC PS7000 Scanner.”
5. Connect with the serial port for the PSC PS7000 Scanner. Note which serial port number is assigned to the scanner.
6. Open your serial port application and connect to the scanner using the serial port that was assigned in the previous step.

Battery Pack Charging and Maintenance

NOTE

The Amber LED will blink twice when a bar code is decoded when the battery is getting low.

Seat the scanner (with installed Battery Pack) in a powered Base Station as shown in Figure 5, ensuring the Battery Pack is fully seated and engages the station’s metal contacts. The scanner will sound a short “chirp” when good contact is made and the green LED on the Base Station should flash, indicating the battery is charging. Alternatively, multiple Battery Packs can be charged external to the scanner using an accessory charging unit available from your PSC dealer.

There presently are no US, North America or World disposal requirements for Lithium-Ion batteries such as the Battery Pack, so when they won't hold a charge anymore they can be disposed of; preferably through a recycling center. Contact your local government for disposal or recycling practices in your area.

Figure 5. Charging the Battery Pack in a Docked Scanner

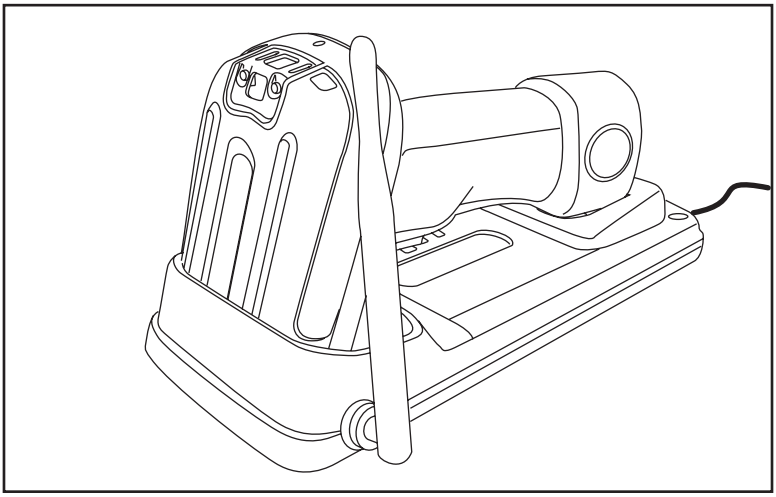

Programming

The scanner is typically factory-configured with a set of default features standard to the interface type you ordered. You can select other options and customize your scanner through use of the instructions and programming bar codes available in the Product Reference Guide (PRG). You can view and download this and other manuals from the website listed on the back cover of this manual.

Interface Selection

Select the desired interface by scanning the associated bar code below. For Keyboard Wedge interfaces, see Table 1-1 for a listing of associated keyboard types.

INTERFACE	SELECTION BARCODE
RS-232 Standard	
RS-232 Wincor-Nixdorf	
Wand Emulation	
IBM 4683 Port 5B	
IBM 4683 Port 9B	
IBM 4683 Port 17	

INTERFACE	SELECTION BARCODE
IBM USB	
USB HID Keyboard	
USB HID POS	

Table 1-1. Keyboard Wedge Interface Reference

I/F Type	PCs Supported
A	PC/XT w/Alternate Key Encoding
B	AT, PS/2 25-286, 30-286, 50, 50Z, 60, 70, 80, 90 & 95 w/Alternate Key Encoding
C	PS/2 25 and 30 w/Alternate Key Encoding
D	PC/XT w/Standard Key Encoding
E	AT, PS/2 25-286, 30-286, 50, 50Z, 60, 70, 80, 90 & 95 w/Standard Key Encoding
F	PS/2 25 and 30 w/Standard Key Encoding
G	IBM 3xxx w/122 keyboard
H	IBM 3xxx w/102 keyboard
I	PS/55 5530T w/104 keyboard
J	NEC 9801
K	WYSE 30/30+ WY-30 Keyboard 83 Keys
L	WYSE 60/85/99 GT/150/160/285 Style IBM Enhanced PC, 520/520ES Style IBM Enhanced PC FR WYSE 55/65/65 ES/120/185/325 Style IBM Enhanced PC
M	WYSE 60/85/99 GT/150/160/285 ANSI Keyboard 105 Keys, 520/520 ES ANSI Keyboard 105 Keys WYSE 55/65/65 ES/120/185/325 ANSI Keyboard 105 Keys
N	WYSE 60/85/99 GT/150/160/285 ASCII Kbd, 520/520 ES ASCII Kbd WYSE 55/65/65 ES/120/185/325 ASCII Keyboard
O	WYSE 60/85/99 GT/150/160/285 ANSI W285 Keyboard 105 Keys, 520/520 ES ANSI W285 Keyboard 105 Keys WYSE 55/65/65 ES/120/185/325 ANSI W285 Keyboard 105 Keys
P	WYSE WINTERM 3320 SE

Q	IBM 3153 IBM 316X, 3179/3180/319X/3270
R	IBM 3151/3152-010, 347X/348X
S	DIGITAL VT 220/320/330/340/350/382
T	DIGITAL VT420
U	DIGITAL VT 510/520 IBM ANSI Style Keyboard
V	DIGITAL VT 510/520 IBM PC Style Keyboard
W	SUN SPARC 5/10
X	SUN 420/440, ITX

NOTE

Reference the Product Reference Guide (PRG) for more information about keyboard support.

Keyboard Wedge A	
Keyboard Wedge B	
Keyboard Wedge C	
Keyboard Wedge D	
Keyboard Wedge E	
Keyboard Wedge F	
Keyboard Wedge G	

Keyboard Wedge H	
Keyboard Wedge I	
Keyboard Wedge J	
Keyboard Wedge K	
Keyboard Wedge L	
Keyboard Wedge M	
Keyboard Wedge N	
Keyboard Wedge O	
Keyboard Wedge P	
Keyboard Wedge Q	
Keyboard Wedge R	

Keyboard Wedge S	
Keyboard Wedge T	
Keyboard Wedge U	
Keyboard Wedge V	
Keyboard Wedge W	
Keyboard Wedge X	

Resetting the Standard Product Defaults

If programming settings for your scanner are in an unknown condition, factory settings can be restored by scanning the “Standard Product Default Settings” bar code below. A listing of factory default settings is available in the PRG. Settings can vary, depending upon the interface type.

Standard Product Default Settings

How to Scan

When the trigger is pressed, the scanner projects a red, horizontal illuminating beam. This beam will remain on until the trigger is released, a bar code is read, or until a time-out[1] period expires.

NOTE

If the surface being scanned is highly reflective (e.g., laminated), it may be necessary to tilt the item or the scanner slightly (15° to 18°) to prevent unwanted reflection.

Linear Bar Codes — To scan a linear bar code, center the illumination beam over the bar code as shown in Figure 6a. The scanner must "see" across the width of all of the bars. Move the scanner further away from the bar code to increase the scanning coverage area.

Stacked Bar Codes — Stacked bar codes are read by holding in on the trigger and moving the illumination beam in a smooth motion over the bar code from top to bottom as shown in Figure 6b. That motion should be slow as well, since moving very fast will cause individual rows of the stacked code to be overlooked, and will require extra sweeps to capture. You will hear a series of ticks, followed by a final beep when the bar code's content has been completely decoded. You may need to sweep the bar code several times in order to complete the read. Sweeps may be made either from top-to-bottom or bottom-to-top.

1. Reference the Product Reference Guide (PRG) for more information about the aiming beam time-out period.

Figure 6. Scanning Bar Codes

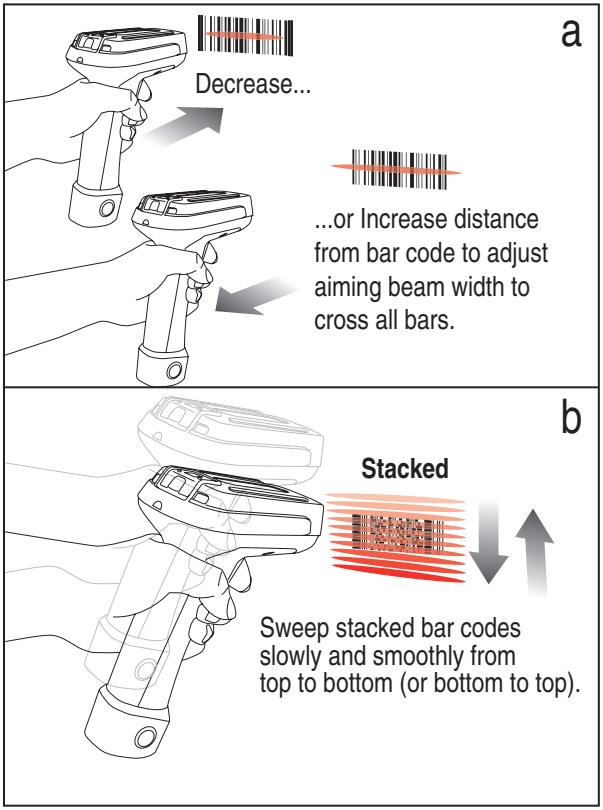

Troubleshooting

Troubleshoot your scanning system by performing the following checks:

Troubleshooting the RF System

For the RF system, ensure...

- the battery is charged. See "Battery Pack Charging and Maintenance" on page 7.
- the battery is properly installed. See "Installing the Battery Pack" on page 1.

- the scanner is linked to the desired Base Station. See "Linking the Scanner to a Base Station" on page 5.
- the scanner is within reasonable operating range of the Base Station, with no major obstructions between the radio units such as thick walls or heavy machinery. (At the time of this writing, maximum scanner-to-Base Station range is specified at 100 meters.)
- the Base Station is powered-on. When the Base Station powers up, both LEDs briefly flash. If both lights are bright and crisp, this is a good indication of adequate power input from either Power Off the Terminal (P.O.T.) or the optional AC Adapter (if used).
- the Base Station interface cable is securely attached to the host. Consult your technical support manager or refer to your host system manual to identify the proper cable connection for the scanner. If necessary, verify interface cable function by using a known-good interface cable.

Troubleshooting the Scanner

If the problem is specific to scanning, verify that...

- The scanner will automatically perform a set of self-tests whenever you turn it on. Observe and note any special indications made by the scanner (an unexpected pattern of flashes or beeps) during power-up. If technical support is contacted regarding a problem, they may request this information.
- Does the scanner power on? Does the illumination beam come on? If no illumination beam, check that...
  - the battery has been adequately charged.
  - the battery is fully seated and its latch engaged.
  - the trigger works.
- Is the scanner having trouble reading your symbols?
  If the scanner isn't reading symbols well, check that the symbols...
  - aren't smeared, rough, scratched, or exhibiting voids.
  - aren't coated with frost or water droplets on the surface.

  - are enabled in the scanner. See the Product Reference Guide (PRG) for more about configuring the scanner to read symbologies).

- Is the bar code displayed but not entered?
  The bar code is displayed on the host device correctly, but you still have to press a key to enter it (the Enter/Return or Tab key, for example).

  You need to program a suffix which enables the scanner to output the bar code data plus the key you need (such as a carriage return "CR") to enter the data into your application. Refer to the PRG for further information.

- Does the scanner read the bar code incorrectly?
  If the scanner reads a bar code, but the data is not displayed correctly on the host screen:

  - The scanner may not be programmed for the appropriate terminal interface. For example, you scan "12345" and the host displays "@es%." Reprogram the scanner with the correct interface selection bar code. See the Product Reference Guide (PRG).

  - The scanner may not be programmed to output your bar code data properly. For example, you scan "12345" and the host displays "A12345B." Reprogram the scanner with the proper Data Editing selections. Reference the PRG.

- The scanner won't read your bar code at all.

  - Scan the part number bar code on the back of this manual or other known-good bar code samples. If the scanner reads sample bar codes, check that your target bar code is readable.

  - Verify that your bar code symbology is enabled. See the PRG.

- If you aren't sure what programming options have been set in the scanner, or if you want the factory default settings restored, go to the Resetting the Standard Product Defaults section of this manual and scan the standard factory default settings bar code.

- The scanner sounds other than a standard “Good Read” beep followed by an “Acknowledge[1]” beep when reading a bar code (indicating the bar code has been read and properly transmitted).
  - Verify the scanner is linked to and within range of its Base Station.

1. Typically, both of these beep indications are active in the scanner. To enable/disable these indications, reference the PRG.

PSC Inc. hereby declares that the equipment specified below has been tested and found compliant to the following directives and standards.

EU Directives: 89/336/EEC EMC
73/23/EEC Low Voltage

Standards

Radio: FCC Part 15.247 and Part 2 (US)
RSS-210 (Canada)
ETS 300 328 (R&TTE directive) (Europe)
and others

EMC: FCC Part 15 Class B (US)
ICES-003 Class B (Canada)
EN 55022 Class B (Europe)
AS/NZS CISPR 22 [Class B] (Australia/New Zealand)

Product Safety: UL 60950-1 (US)
CSA 60950-00 (Canada)
EN 60950 (Europe)
EN 60825-1/A2 (Europe)
IEC 60950-1 (World)
IEC 60825-1 (World)

Li-Ion Battery Pack: UL 1642, UL 2054
United Nations 38.3

Immunity: EN55024 and EN301 489- Generic Immunity – ITE (Europe)
EN 61000-3-2 - Harmonic Current (EU)
EN 61000-3-3 - Voltage Flicker (EU)

Quality Systems: ISO 9001:2000
BS EN ISO 9001:2000

Power Supplies (optional equipment):

UL 60950 (120 VAC - US)
EN 60950 / IEC 60950 (230 VAC – Europe / World)

AS/NZ60950

Equipment Type: Barcode Scanning

Product: PowerScan® 7000BT SRI with Base Station

Serial Number Start Sequence: WXxxxxxx
Date Placed into EU Service: October 2006
Responsible Manufacturer: PSC Inc./PSC Scanning, Inc.
959 Terry St. Eugene, OR 97402 US

Asia Pacific
PSC Hong Kong
Hong Kong
Telephone: [852]-2-584-6210
Fax: [852]-2-521-0291

Australia
PSC Asia Pacific Pty Ltd.
North Ryde, Australia
Telephone: [61] (2) 9870 3200
Fax: [61] (2) 9878 8688

France
PSC S.A.R.L.
LES ULIS Cedex, France
Telephone: [33].01.64.86.71.00
Fax: [33].01.64 46.72.44

Germany
PSC GmbH
Darmstadt, Germany
Telephone: 49 (0) 61 51/93 58-0
Fax: 49 (0) 61 51/93 58 58

Italy
PSC S.p.A.
Vimercate (MI), Italy
Telephone: [39] (0) 39/62903.1
Fax: [39] (0) 39/6859496

Japan
PSC Japan K.K.
Shinagawa, Tokyo, Japan
Telephone: 81 (0)3 3491 6761
Fax: 81 (0)3 3491 6656

Latin America
PSC S.A., INC.
Miami, Florida, USA
Telephone: (305) 591-3222
Fax: (305) 591-3007

United Kingdom
PSC Bar Code Ltd.
Watford, England
Telephone: 44 (0) 1923 809500
Fax: 44 (0) 1923 809 505

www.psc.com

PSC Inc.
959 Terry Street
Eugene, OR 97402
Telephone: (541) 683-5700
Fax: (541) 345-7140

©2006 PSC INC.
R44-2586 (Rev. X3)
10/06