PowerScan™ RF

Systems Manual

PSC Scanning, Inc.

959 Terry Street
Eugene, Oregon 97402
Telephone: (541) 683-5700
Telefax: (541) 345-7140

PSC, the PSC logo, Quadralogic and PowerScan are registered trademarks of PSC Inc. All other trademarks and trade names referred to herein are property of their respective owners.

All rights reserved. No part of the contents of this documentation or the procedures described therein may be reproduced or transmitted in any form or by any means without prior written permission of PSC Inc. Owners of PSC Inc.'s products are hereby granted non-exclusive, revocable license to reproduce and transmit this documentation for the purchaser's own internal business purposes. Purchaser shall not remove or alter any proprietary notices, including copyright notices, contained on this documentation and shall ensure that all notices appear on any reproductions of the documentation.

Should future revisions of this manual be published, you can acquire printed versions by contacting PSC Customer Administration. Electronic versions will either be downloadable from the PSC web site (**www.pscnet.com**) or provided on appropriate media. If you visit our web site and would like to make comments or suggestions about this or other PSC publications, please let us know via the "Contact PSC" page.

Disclaimer

Reasonable measures have been taken to ensure that the information included in this manual is complete and accurate. However, PSC reserves the right to change any specification at any time without prior notice.

TABLE OF CONTENTS

Introduction **1**
About This Manual 1
References 1
Product Description 2
Laser Cautions 4
Radio Frequency Interference 5
Quick Start Instructions **6**
Unpacking and Inspecting the Base Station 6
Installation Procedures 6
Installing the Battery 7
Verifying Scanner Operation 8
Connecting the Base Station to the Host Terminal 8
Linking the Scanner to a Base Station 10
Verifying Scanner-to-Base Station Communications 10
Using the PowerScan RF System **11**
Battery Charging and Maintenance 11
Tips for Extending Battery Life 12
Disposing of Batteries 13
Four Station Charger 13
How to Scan 15
Depth of Field 16
Active Symbologies 20
Enhanced Scanning for Hard-to-Read Bar Codes 20
LED and Beeper Indications 21
Maximizing Signal Range 25
Three-Position Lock 26
Mounting the Base Station **27**
Horizontal (Table or Countertop) Mounting 27
Vertical (Wall) Mounting 29
Post or Forklift Mounting 30
RF Programmable Features **31**
Programming Overview 32
What Is Programming Mode? 33
The Programming Session 34
Programming Sequence 36

Scanner vs. Base Station Features 38
Interface (I/F) Selection 39
Universal Keyboard Wedge I/F Selection 42
Terminal/Keyboard Settings 43
RF Beeper Settings 44
RF When to Beep 45
RF When to Beep Options (continued) 46
Radio Transmit Power 50
RF Channel Selection 51
Transmission Retries Before Message Time-out 53
Wait Time for ACK 56
Wait Time For Scanner Power Shutdown 57
Wait Time Between Retries of Failed Transmission 58
HACK Transmit Options 60
Wait Time For HACK From Host 62
Drop Links on Reset Option 63
Drop Oldest Links Option 64
Common Configuration 65
Set Maximum Linked Scanners 67
Source-Radio Identification (ID) 69
Low Battery LED Indication 71
Maintenance and Troubleshooting 72
Scanner Maintenance 72
Base Station Maintenance 72
Four Station Charger Maintenance 72
Troubleshooting 73
If the Scanner Fails to Link with the Base Station 74
Standard Warranty 78
Exclusions 78
Limitations of Liability 78
Assignment 78
Risk of Loss 78
Appendix A: Sample Bar Codes A-1
Appendix B: Number Pad B-1

Introduction

About This Manual

This systems manual provides information and instructions to connect and configure your PowerScan™ RF system. The following sections are included in the manual:

- *Introduction* presents general information about the contents of this manual and about the system.
- *Quick Start Instructions* provide easy to follow procedures for installing your system quickly.
- *Using the PowerScan RF System* provides details about scanning basics, system controls and indicators.
- *Mounting the Base Station* demonstrates ways to securely attach the Base Station to various work surfaces.
- *RF Programmable Features* is a set of procedures detailing system configuration that is unique to the RF system.
- *Maintenance and Troubleshooting* provides solutions for problems that may be encountered during installation and use of the system.
- is a statement describing the warranty policy covering the system.

References

Other manuals are available for this product. Printed copies can be ordered through your distributor. Some manuals can be downloaded at our website address listed on the back cover of this manual. Read the terms of use and instructions at the site to download, save, view or print the most current manual(s) from the internet.

Configurator Express™ On-Screen Programming offers a convenient way to program your scanner using your PC. Information about ordering a kit (includes software, adapter and cable) for your RF scanner can also be accessed from our website (see the back cover of this manual).

Product Description

The PowerScan™ RF scanner is designed for durability, with high impact-resistant material and protective rubber cushioning at every point of impact, and it also provides the unleashed freedom of Radio Frequency (RF) communication with your host system. Scanner and Base Station nomenclature and labeling are shown in Figure 1 and Figure 2 below.

Figure 1. Scanner Labels and Nomenclature

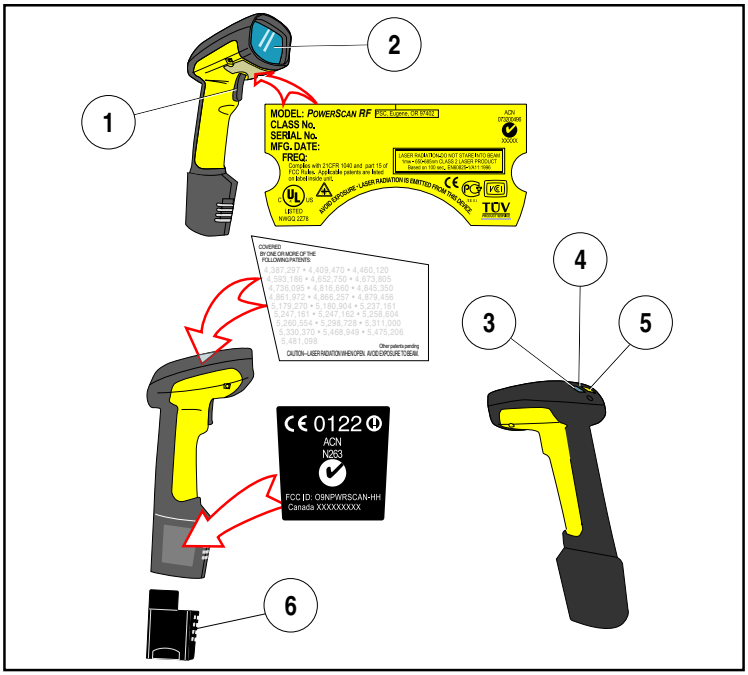

1. Trigger
2. Scan Window
3. Green LED
4. Tether Hook
5. Yellow LED
6. Battery

NOTE

Figure 1 and Figure 2 show label placement ONLY. For actual regulatory, patent and other applicable information, view the labels on the product itself, or call your nearest sales or service representative.

Figure 2. Base Station Labels and Nomenclature

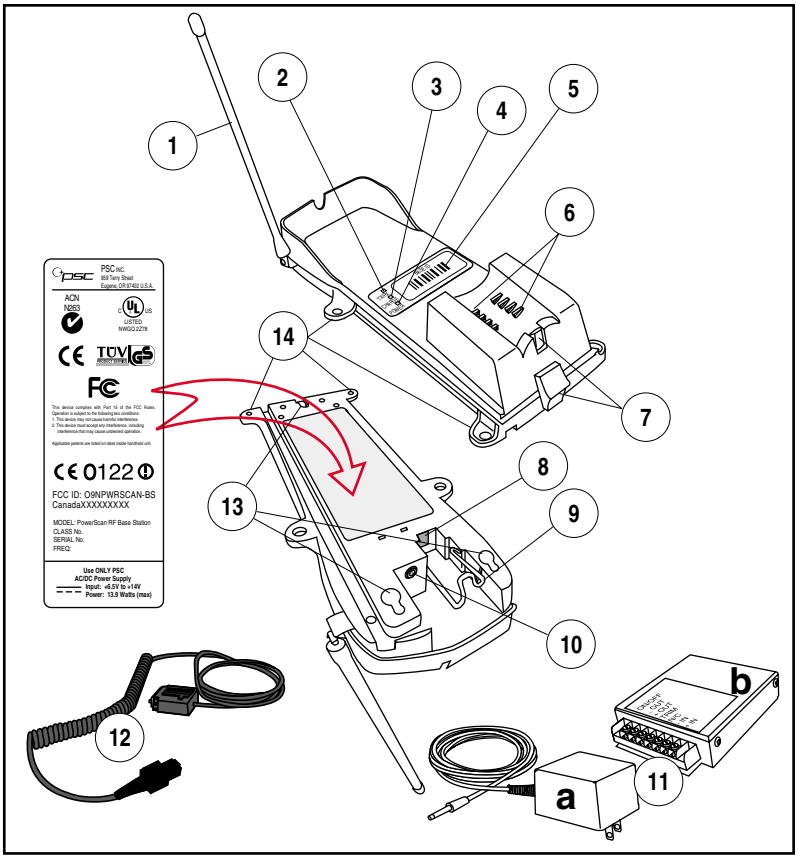

1. Antenna
2. Transmit/Receive (TX/RX)/ Diagnostics LED
3. Charge LED
4. Power LED
5. Base ID Bar Code
6. Charging Pins
7. 3-Position Lock
8. Interface (I/F) Connector
9. Cable Retainer
10 Power Connector
11. Power Supply - (a) AC Adapter or (b) Forklift DC Converter
12. Interface (I/F) Cable
13. Mounting Key Slots (3)
14. Mounting Flanges (4)

Laser Cautions

The PowerScan RF bar code scanner is certified in the U.S. to conform to the requirements of *DHHS/CDRH 21CFR Subchapter J for Class II laser products*. Class II products are not considered to be hazardous. The scanner contains a Visible Laser Diode (VLD) at a wavelength of 650-670 nanometers and is designed so that there can be no human access to harmful levels of laser light during normal operation, user maintenance, or during prescribed service operations.

CAUTION

In the unlikely event that a bright laser spot is experienced rather than a scan line, do not stare into the beam or attempt to repair the unit. Discontinue operation and return the unit to your dealer. Note that when using Marker Beam Mode, a single aiming dot is projected momentarily preceding a scan line and is not considered a malfunction.

CAUTION

Do not open or otherwise service any components in the optics cavity. Opening or servicing any part of the optics cavity by unauthorized personnel may violate laser safety regulations. The optics system is a factory only repair item.

NOTE

The PowerScan™ RF scanner is required to be used in conjunction with the PSC Base Station, Model: PowerScan RF Base Station.

Radio Frequency Interference

This device complies with Part 15 of the FCC Rules. Operation is subject to the following two conditions:

1. This device may not cause harmful interference, and
2. This device must accept any interference received, including interference that may cause undesired operation.

This Class B digital apparatus meets all requirements of the Canadian Interference-Causing Equipment Regulations.

Cet appareil numerique de la classe B respecte toutes les exigences du Reglement sur le material broilleur du Canada.

This equipment has been tested and found to comply with the limits for a Class B digital device, pursuant to Part 15 of the FCC Rules. These limits are designed to provide reasonable protection against harmful interference in a residential installation. This equipment generates, uses and can radiate radio frequency energy and, if not installed and used in accordance with these instructions, may cause harmful interference to radio communications. However, there is no guarantee that interference will not occur in a particular installation. If this equipment does cause harmful interference to radio or television reception, which can be dertermined by turning the equipment off and on, the user is encouraged to try to correct the interference by one or more of the following measures:

- Reorient or relocate the receiving antenna.
- Increase the separation between the equipment and receiver.
- Connect the equipment into an outlet on a circuit different from that to which the receiver is connected.
- Consult the dealer or an experienced radio/TV technician for help.

Quick Start Instructions

Unpacking and Inspecting the Base Station

After unpacking your new Base Station, check the contents of the shipping carton to ensure all the items you ordered are included:

- PowerScan™ Scanner Base Station
- Interface Cable
- Power Supply (AC Adapter or Forklift DC Converter)
- Systems Manual (this manual)
- Programming Guide
- Optional Accessories that you ordered. (The Base Station can be purchased with or without accessory kits.)

If your package contains wrong or missing components, contact your place of purchase. If there are damaged components, immediately file a claim with the carrier. You may want to save your packing material in case you need to ship the scanner at some later time.

NOTE

Other manuals for this product are available on our internet website. See the back cover for our internet address.

Installation Procedures

The basic steps below must be performed to set up the RF scanner. Each of these steps is detailed in this section.

- Installing the Battery
- Verifying Scanner Operation
- Connecting the Base Station to the Host Terminal
- Linking the Scanner to a Base Station
- Verifying Scanner-to-Base Station Communications
- Using the PowerScan RF System

Installing the Battery

> **NOTE**
>
> **To assure maximum usage, batteries should always be fully charged before their initial use. (See *Battery Charging and Maintenance* on page 12.)**

Orient the battery as shown in Figure 3, then push it into the scanner until it snaps in place. To remove the battery, push in on the release tabs on both sides of the battery's base and pull it straight out of the scanner.

Figure 3. Installing the Battery

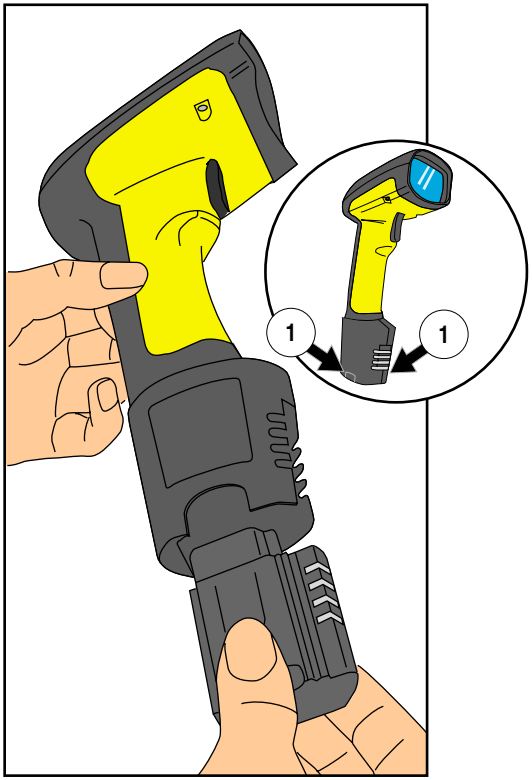

1. Battery Release Tabs

Verifying Scanner Operation

Once a charged battery has been installed in the scanner, scan the sample bar codes in Appendix A that correspond to the symbologies your scanner is programmed to read. If unsure how to do this, see the section on *How to Scan* in this manual. The system may signal with one or a combination of indicators depending upon how the scanner and Base Station are programmed to respond (see *LED and Beeper Indications* for details). If your scanner fails to read a sample bar code of a symbology it's programmed to read, turn to the section titled, *Maintenance and Troubleshooting*.

Connecting the Base Station to the Host Terminal

NOTE

It is important that the interface (I/F) cable be connected to the Base Station prior to applying power to the system. This is because the interface type (RS-232, IBM, Keyboard Wedge, etc.) is selected by the Base Station subject to the I/F cable it is connected to at the time of power-up.

1. Connect the I/F cable to the Base Station (see Figure 4A). The I/F cable is inserted into the connector and the cable retainer clip is rotated over the cable overmold until the retainer snaps in place (see Figure 4B). To disconnect the cable, push in on the retainer (away from the catch on the plastic wall) to release it and enable it to swing upward, allowing the cable to be pulled free (see Figure 4C).

Figure 4. Connecting/Disconnecting the Interface (I/F) Cable

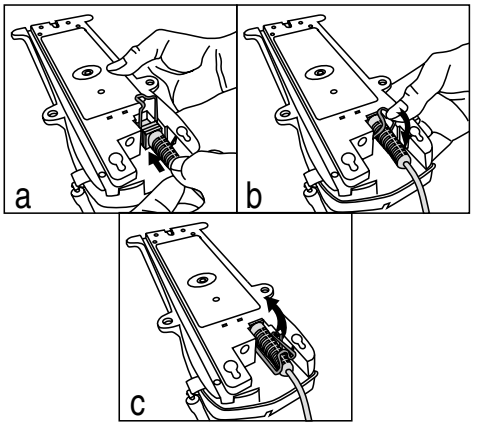

2. Consult your Host Terminal manual to determine the required communication parameters for the Host Terminal (e.g., baud rate, parity, etc.) and, if necessary, modify the programmed parameters to be compatible with those requirements. Scanner and Base Station programming is performed using one of the following:

   - Configurator Express™ Programming Software

   - PowerScan™ Bar Code Scanner Programming Guide

NOTE

See *References* for more information about how to obtain software and manuals for this product.

CAUTION

The Host Terminal manual should also be consulted as to whether power must be turned off before connecting peripheral devices. Ensure that the correct procedure is followed to avoid damage to equipment or interruption of system functions.

3. Connect the I/F cable to the proper port on the Host Terminal (check your Host Terminal manual to determine hardware requirements).

4. Connect the AC Adapter's power cord at the Base Station and plug the AC/DC adapter in at the wall outlet (see Figure 5). The Base Station's POWER LED should be illuminated when the unit is properly connected to power.

Figure 5. Connecting Power to the Base Station

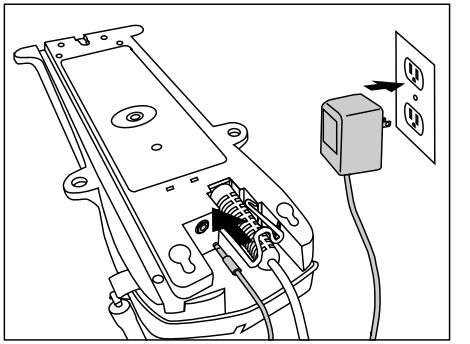

5. Apply power to the Host Terminal.
6. Verify communication with the Host Terminal by aiming the linked scanner at a sample bar code from Appendix A, and pulling the trigger (see *How to Scan* for tips about scanning bar codes). Confirm that the scanner/Base Station sent the data to the host terminal. If not, see the section, *Maintenance and Troubleshooting*. Once all communications are verified, the system is ready for use.

Linking the Scanner to a Base Station

To link a scanner to a Base Station, simply scan the Base Station ID bar code located on the top of the desired Base Station (see Figure 2). As the scanner searches for the Base Station, a short beep is heard as it seeks for the correct channel. When the Base Station responds to the request, the scanner's beeper will either sound a "Link Granted," or "Link Denied" signal (see the section, *LED and Beeper Indications* for more information).

The existing Base Station system configuration can be automatically downloaded to the scanner. This automatic download feature is configurable and can be disabled. See the section, *Common Configuration* for more information about this feature. If downloading occurs, a slight delay with link verification announcement will occur.

CAUTION	**Since a new/replacement scanner may have been shipped with a custom configuration or may have been modified with other special programming, it may not be desirable to download a potentially older configuration from an existing Base Station. In this case, reference the *RF Programmable Features* section of this manual, or the *Configurator Express*™ On Screen Programming Software and consider uploading the scanner's newer configuration to the Base Station prior to linking.**

Verifying Scanner-to-Base Station Communications

Point the linked scanner at a sample bar code from Appendix A, and pull the trigger (see *How to Scan* for tips on scanning bar codes). Watch the TX/RX (transmit/receive) indicator LED on the Base Station and/or scanner green LED while scanning the bar code. The LEDs should flash momentarily as the two devices communicate. If no communication is indicated, see the section titled, *If the Scanner Fails to Link with the Base Station*.

When the scanner is programmed to do so, communication can also be indicated by a second "acknowledgement" tone[1] that is sounded after a "good read" tone. If a transmission error beep (warble) is heard following a "good read" tone instead of the single acknowledgement tone, communication between the devices may have failed[2]. Refer to the sections *Using the PowerScan RF System*, and *Maintenance and Troubleshooting* for possible remedies, should this occur.

Using the PowerScan RF System

This section covers the following topics:

- Battery Charging and Maintenance
- How to Scan

1. See *LED and Beeper Indications* for more details about beeper signals.
2. Other reasons for a "warble" are that the Base Station may be configured differently than the scanner, or that the system's interface doesn't support the symbology (bar code type) you're trying to scan.

- LED and Beeper Indications
- Maximizing Signal Range
- Three-Position Lock

Battery Charging and Maintenance

NOTE

When the scanner is in use, a low battery condition is indicated by a repeated two-flash signal from the scanner's green LED every time the trigger is pulled before the laser is enabled. This indicator may have been disabled via custom programming. See *LED and Beeper Indications* for more information.

Seat the scanner in the Base Station as shown in Figure 6, ensuring that the battery fully engages the station's metal contacts. The CHARGE LED on the Base Station should flash, indicating the battery is charging.

Figure 6. Charging the Battery

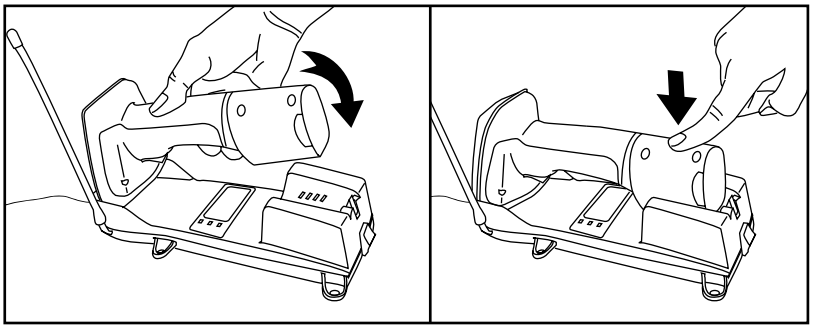

Rapid flashing indicates that charging is taking place. Rapid charging occurs when the battery temperature is between 10°C (50°F) and 46°C (115°F), and/or voltage of the battery is between 2.0 and 3.2V. Charge time is less than 4.2 hours. Rapid charge ends with the battery at approximately 90 to 95% capacity. The CHARGE LED remains on steady when trickle charging or after the charge cycle is complete.

NOTE

A scanner may be charged simultaneously while other scanners are in use with the Base Station.

NOTE

Batteries will not charge if their temperature is below 0°C (30°F). If a battery that is too cold is inserted into the Base Station, the Charge LED will not illuminate.

Tips for Extending Battery Life

Nickel Metal Hydride (NiMH) batteries will better hold a charge if allowed to discharge at least once a week. The chemical reactions that correspond to charge and discharge in a rechargeable battery should occur to obtain the maximum number of charge/discharge cycles in the battery. If a battery is removed from the scanner and stored, it should be fully charged when stored. Batteries will lose the ability to hold a charge when stored for long periods of time (weeks, months, or longer).

Batteries will typically have about 30% charge capacity when shipped. To assure maximum usage, the battery should be fully charged before use.

Store your battery in a cool dry place. Do not leave your battery exposed to direct sunlight or temperatures below 0°C (30°F) and above 38°C (100°F).

Disposing of Batteries

There presently are no US, North America or World disposal requirements for NiMH batteries, so when they won't hold a charge anymore, the batteries can be disposed of, preferably through a recycling center.

Four Station Charger

If you have a Four Station Charger, batteries are inserted for charging as shown in Figure 7. A 90% rapid charge can be achieved in only two hours when using this optional accessory; half the time than when a Base Station is used for charging. The LEDs at each battery station operate the same as the CHARGE LED on the Base Station, with rapid flashing indicating that rapid charging is taking place and on steady during trickle charging or when the rapid charge cycle is finished.

NOTE

If you insert a battery into the Four Station Charger and no LEDs illuminate, the battery may be too cold. Batteries must be at 0°C or higher to charge. Do not attempt to charge cold batteries, since placing them in the charger will curtail the charging of other batteries already present in the unit.

Figure 7. Using the Four Station Charger Accessory

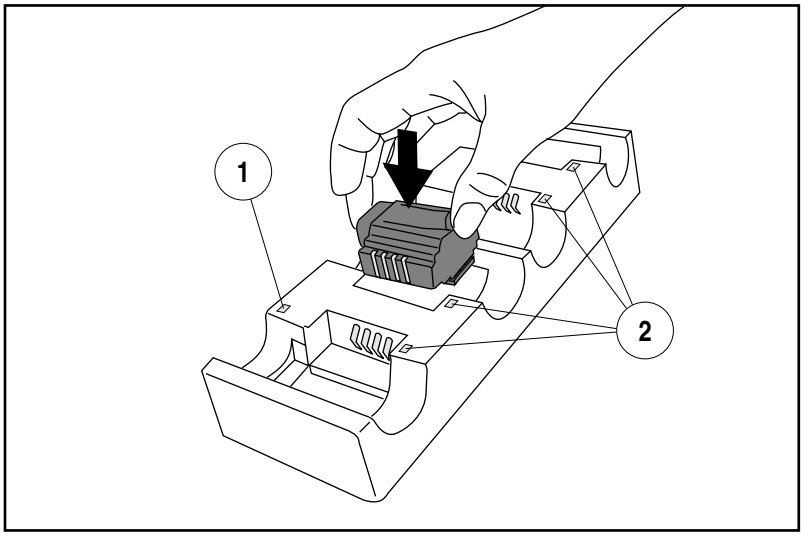

1. Device Power LED
2. Station Charge LEDs

How to Scan

Figure 8 illustrates some tips to help get the best scanning results:

1. The scanner must be pointed at a slight angle to the bar code. Do not hold the scanner perpendicular to the bar code.
2. The laser beam must cross the entire bar code. The scanner cannot correctly read if the entire bar code is not scanned.

Figure 8. Scanning Tips

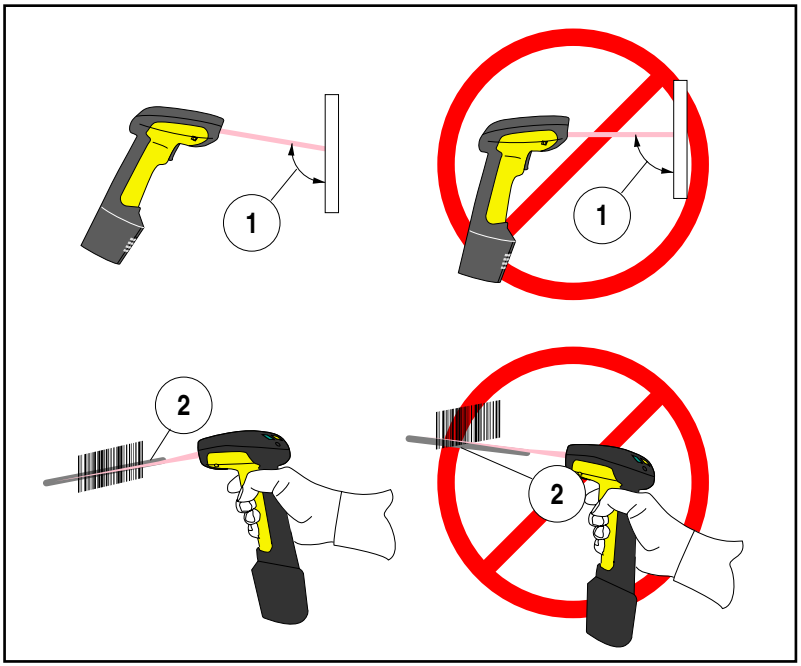

Depth of Field

There are currently four different range models for the RF scanner. Depending upon the model type of your scanner, you'll need to hold the unit at a given distance from the bar code to achieve optimum scanning results. The following diagrams provide depth of field information for each of the models when scanning grade A, Code 39 bar codes: Standard Range (SR), High Density (HD), Long Range (LR) and Extra Long Range (XLR).

Definition of a "mil"

A "mil" is equal to 0.001 inches. In the context of the illustrations in this section, a mil represents the minimum bar code element width. Thus a 5 mil bar code would have a minimum element width of 5 mils (or 0.005 inches).

NOTE

Measurements are based on SR models set with the standard 28° scan width (as opposed to the Half Angle setting of 14°). Reference the Programming Manual for more information about the Half Angle feature.

Specifications are subject to change without notice.

Figure 9. Depth of Field (SR)

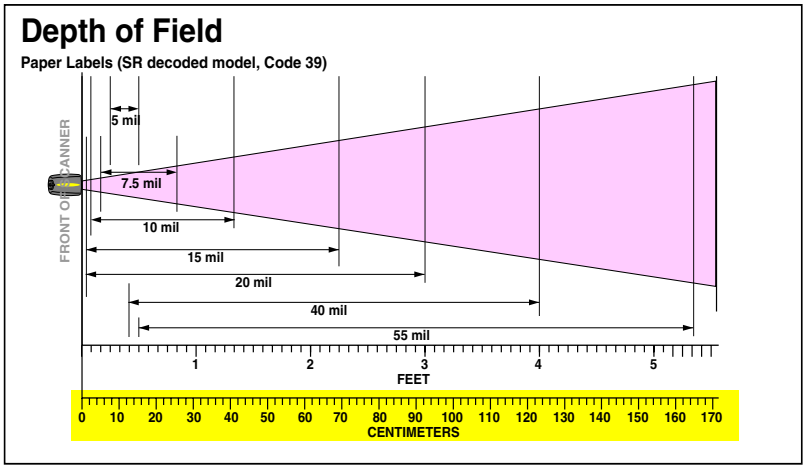

NOTE

See the section titled, *Definition of a "mil"* for more information about reading this chart. Measurements are based on HD models set with the standard 28° scan width (as opposed to the Half Angle setting of 14°). Reference the Programming Manual for more information about the Half Angle feature.

Specifications are subject to change without notice.

Figure 10. Depth of Field (HD)

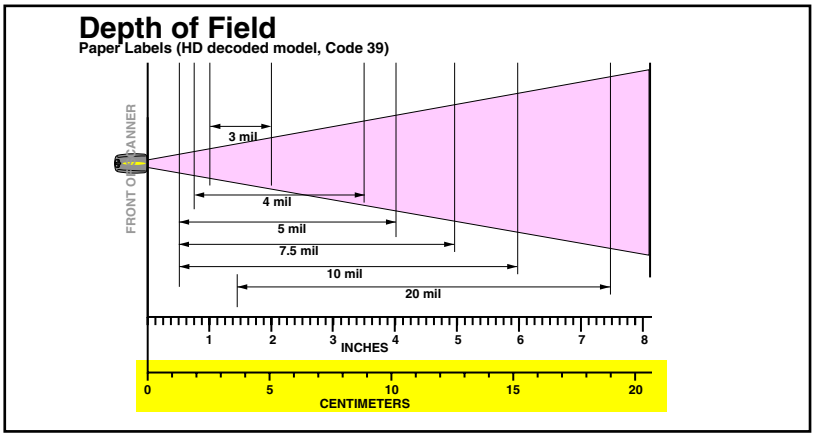

NOTE

See the section titled, *Definition of a "mil"* for more information about reading this chart. Measurements are based on LR models set with the a 14° scan width (as opposed to the alternate Full Angle setting of 28°). Reference the Programming Manual for more information about the Half Angle feature.

Specifications are subject to change without notice.

Figure 11. Depth of Field (LR)

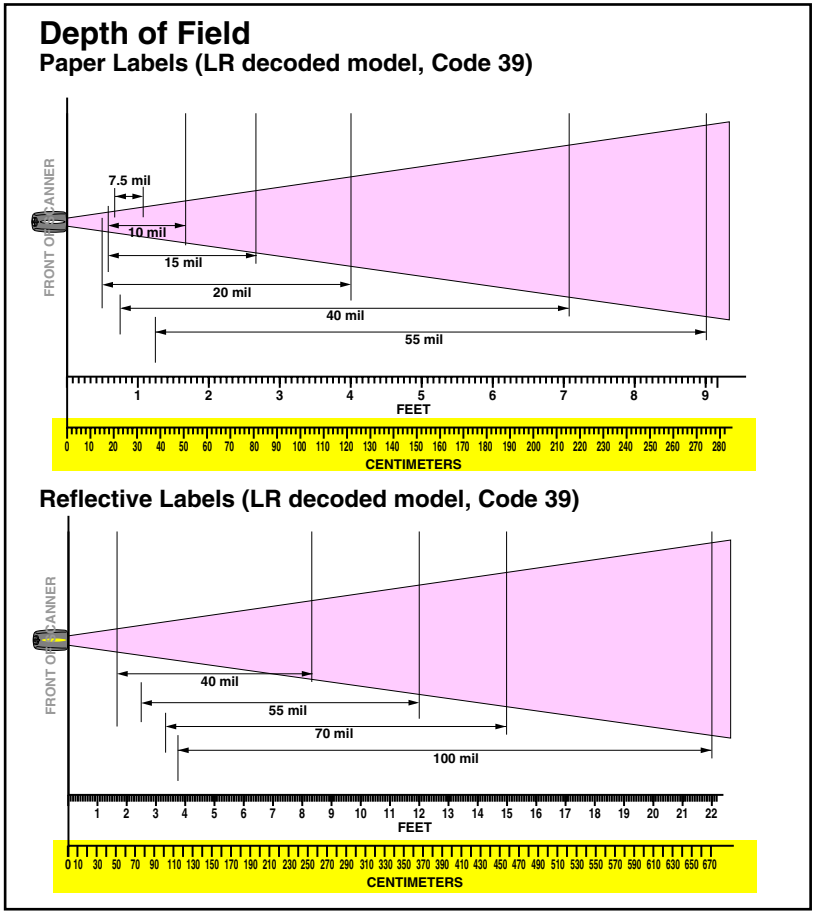

NOTE

See the section titled, *Definition of a "mil"* for more information about reading this chart. Measurements are based on XLR models set with a 10° scan angle width.

Specifications are subject to change without notice.

Figure 12. Depth of Field (XLR)

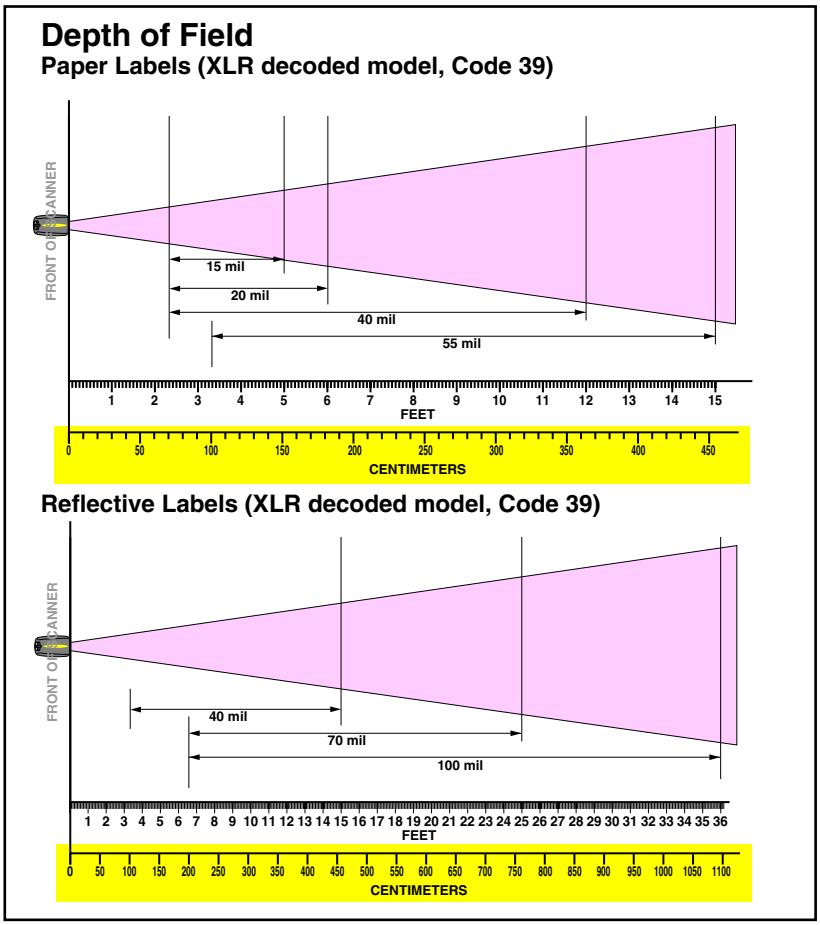

Active Symbologies

The active (enabled) bar code symbologies in the standard factory defaults are:

- Code 39 (C39)
- Code 128 (C128)
- Interleaved 2 of 5 (I 2 of 5)

Your scanner should be pre-programmed with these standard factory default settings, unless...

...it was shipped to you programmed with unique, customer configuration settings.

...you or another user have made changes to scanner programming.

Enhanced Scanning for Hard-to-Read Bar Codes

Decoded scanners can be programmed to decode extremely poor quality bar codes by activating advanced Quadralogic™ Decoding. To select this feature, see the Programming Guide.

Scanner programming can also be performed using your PC and the Configurator Express™ On-Screen Programming Kit.

NOTE

Information about manuals, kits and programming software for this product are available at our website. See the back cover for our web address.

LED and Beeper Indications

The Base Station LED indicators and the scanner's LEDs and beeper are used to announce system status and perform other useful signals. The tables below list the default function of each of the various indicators.

NOTE

Some LED and beeper indications can be disabled or modified via scanner programming. The tables indicate the default behavior of the indicators, with shaded rows representing features that are programmable.

Table 1. Scanner GREEN LED Functions

LED INDICATION	DURATION	COMMENT
Disable Indication	100ms on, 900 ms off	Indicates the scanner has been disabled.
Good Read Indication	500 ms on	Indicates a bar code has been read and decoded.
Program Mode Indication	500 ms on, 500 ms off Continuous flashing	Indicates the scanner is in Programming Mode.
Field Replaceable Unit (FRU) Indications	Varies. Consists of a long flash followed by multiple short flashes.	Enables service technicians to identify Field Replaceable Unit (FRU) errors.
Low Battery Indication	Two flashes at 100 ms on, 350 ms off.	Occurs at trigger pull before the laser is enabled. Indicates the battery is in need of recharging.

Table 2. Scanner YELLOW LED Functions

LED INDICATION	DURATION	COMMENT
Laser on indication	On Steady	The yellow LED illuminates whenever the laser is on.

Table 3. Scanner BEEPER Functions

SPEAKER INDICATION	DURATION	COMMENT
Scanner Not Currently Linked	Six beeps consisting of 20 ms on, 20 ms off	Indicates a bar code was read before the scanner was linked to a Base Station.
Good Read Beep	100 ms on (short) 250 ms on (medium) 500 ms on (long)	Three programmable functions are available. This indicates a bar code has been read and decoded.
Partial Read Bip	20 ms on	A very short beep ("bip") is sounded when one bar code of a two-bar code pair has been successfully decoded.
Base Station Acknowledgement Beep	100 ms on (short) 250 ms on (medium) 500 ms on (long)	Indicates a successful bar code transmission to the host (configurable), a successful change of channel, or a successful transmission of a new configuration to the host.

SPEAKER INDICATION	DURATION	COMMENT
Transmission Error Beep	High, then low, then high, then low.	Indicates unsuccessful transmission to the host.
Link Beep	Low, then medium, then high.	Indicates a scanner has been successfully linked to a base station.
Unlink Beep	High, then medium, then low.	Indicates a scanner has been successfully unlinked from a base station.
Field Replaceable Unit (FRU) Indications	Varies. Consists of a long tone followed by multiple short tones.	Enables service technicians to identify Field Replaceable Unit (FRU) errors.

Table 4. Base Station LED Functions

LED INDICATION	DURATION	COMMENT
TX/RX (Transmit/Receive)	Lit for variable time[a]	Indicates communications activity to or from the Base Station.
	Continuous rapid flashing at power-up	Indicates a broken radio.
	Varies. Consists of a long flash followed by multiple short flashes.	Enables service technicians to identify Field Replaceable Unit (FRU) errors.
Charge (Battery)	Continuous flashing	When a scanner is nested in the station, this indicates its battery is being quick charged.
	Lit Constantly	When a scanner is nested in the station, this indicates its battery is at or near full charge.
	Not Lit	A scanner is not present or incorrectly inserted into the station. It can also mean the battery is below 0°C (too cold for charge)
Power	Lit Constantly	Indicates that power is on.

a. The LED remains on while the unit is actively processing code which requires a TX/RX to occur. The duration of the LED is dependent upon the length of the message.

Maximizing Signal Range

Here are a few tips about how you can optimize your system installation to allow the scanner greater roving distance from its linked Base Station while maintaining clear communication between the devices.

- Minimize obstructions between the scanner and its Base Station. While the system is capable of communicating through walls, a clean line of sight will always increase the scanner's signal range from the Base Station.
- Never place or install the Base Station in a metal-lined area or enclosure, or near large metal objects.
- Position the Base Station and experiment at various elevations, orientations, etc. to achieve better communications between devices. The system usually works best at heights of one meter or more off the ground. Usually the scanner and Base Station work optimally when operating at about the same height.
- Ensure that programmable features are set to maximize radio transmission. For example, if the feature *Radio Transmit Power* is set to low, set it to high. Selecting a different channel using the options under *RF Channel Selection* might also help. See the section titled, *RF Programmable Features*, for more information about these features.
- Consider using a Four Station Charger accessory to charge batteries as opposed to using the Base Station for this function. It offers faster charging (about half the time to a 90% charge as Base Station charging).

Three-Position Lock

The Base Station is equipped with a three-position lock to allow a scanner to be secured in the Base Station in horizontal, vertical, and forklift installations.

Figure 13. Using the Three-Position Lock

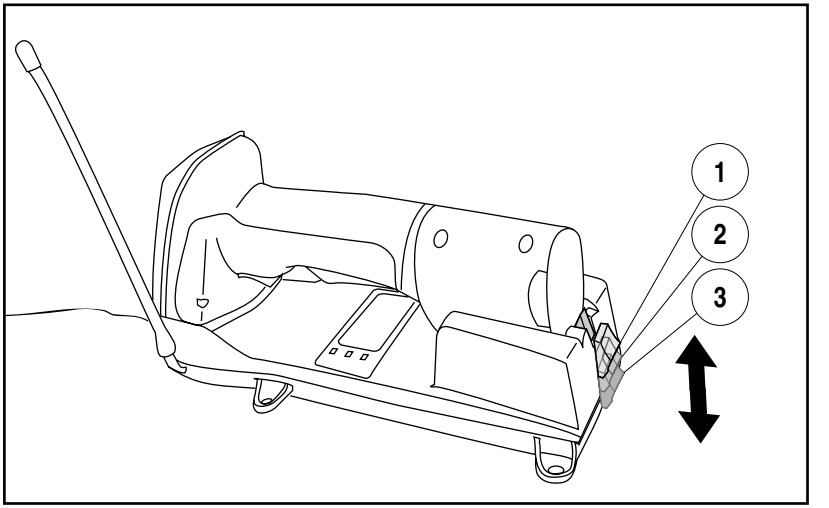

1. Top position:
   Vertical Forklift Mount Lock
2. Middle position:
   Vertical (Wall) Mount Lock
3. Bottom position:
   Unlocked

Mounting the Base Station

The Base Station can be secured to varying surfaces to ensure a permanent, stable installation. Several options are available.

Horizontal (Table or Countertop) Mounting

Using Key Slots

Refer to Figure 14 and follow these steps:

1. Once you have identified the desired area for permanent Base Station installation, use the mounting template included with this manual to mark the position of its "key slot" mounting screws.
2. Install three #8 x 1" (4.1mm x 25.4mm) pan head, self-tapping screws in the marked positions until completely threaded into the mounting surface, then back the screws off two to three full turns.
3. Ensure that power and interface cables are securely connected and routed in the channels provided in the bottom of the Base Station.
4. Align the Base Station key slots (wide end) with the screws, then slide the Base Station to position the screws in the smaller ends of the key slots. Adjust the height of the mounting screws if needed for a secure fit. The Base Station is now secured to the table or countertop.

Figure 14. Mounting Using Key Slots

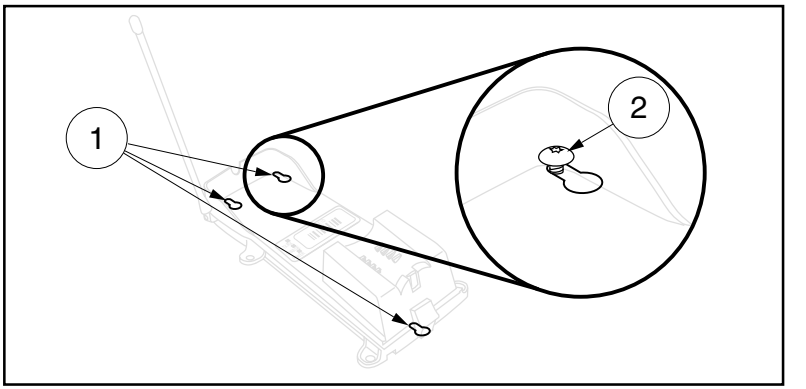

1. Key Slots
2. #8 x 1" (4.1mm x 25.4mm) Pan Head Screw

Using Mounting Flanges

Refer to Figure 15a and follow these steps:

1. Once you have identified the desired area for permanent Base Station installation, hold the unit in place and mark the position of screws using the "mounting flanges."
2. Start and remove four screws (provided) at the marked positions in the mounting surface.
3. Ensure that power and interface cables are securely connected and routed in the channels provided in the bottom of the Base Station.
4. Secure the Base Station to the surface by installing the four screws into the mounting flanges. Base Station attachment is now complete.

Figure 15. Mounting Using Flanges or Two-sided Tape

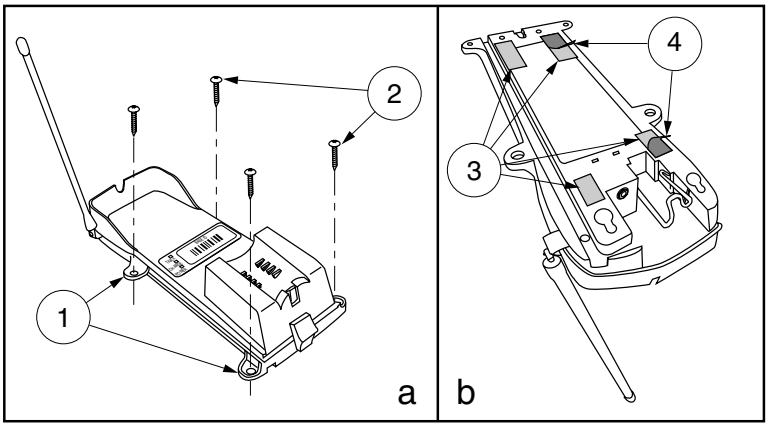

1. Mounting Flanges (4)
2. 4 Screws (provided)
3. Two-sided Tape Strips
4. Backing

Mounting Using Two-Sided Tape

You can also affix the Base Station to a surface using the two-sided tape strips provided with the unit. Simply remove the backing from one side of the strips and apply them to the bottom of the Base Station as shown in Figure 15b. Remove the remaining backing from the tape, then position and firmly press the unit against a smooth, clean surface in the orientation desired.

Vertical (Wall) Mounting

The Base Station can be mounted vertically using the same methods as horizontal mounting (see previous section):

- Using Key Slots
- Using Mounting Flanges
- Mounting Using Two-Sided Tape [1]

1. Since mounting using this method offers less secure attachment, verify that your tape installation is robust enough for your application.

Post or Forklift Mounting

To secure the Base Station to a post or forklift frame, refer to Figure 16 and follow these steps:

1. Verify that the desired mounting area offers sufficient space for safe forklift operation and will not present a hazard for operators or potentially damage the mounted device(s).
2. Ensure that power and interface cables are securely connected and routed in the channels provided in the back of the Base Station.
3. Using tie-wraps or a similar strapping material, secure the Base Station (through the mounting flanges) to a post or frame. Tighten and adjust as needed to assure a secure installation.

Figure 16. Post or Forklift Mounting

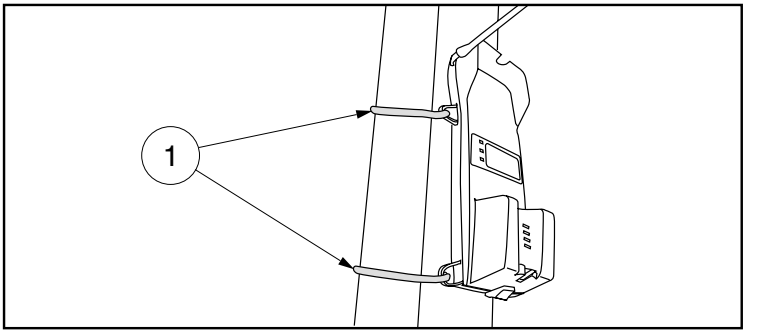

1. Tie Wraps

RF Programmable Features

Use the special programming bar codes contained in this section to set features that are unique to RF models of PowerScan™ bar code scanners. To program other features that are common to all models, use one of the following:

- Configurator Express™ On-Screen Programming Kit
- PowerScan™ Programming Guide

NOTE

See *References* on page 1 for more information about how to obtain kits, software and manuals for this product.

Programming features included in this manual are:

- RF Beeper Settings
- Radio Transmit Power
- RF Channel Selection
- Transmission Retries Before Message Time-out
- Wait Time for ACK
- Wait Time For Scanner Power Shutdown
- Wait Time Between Retries of Failed Transmission
- HACK Transmit Options
- Wait Time For HACK From Host
- Drop Links on Reset Option
- Drop Oldest Links Option
- Common Configuration
- Set Maximum Linked Scanners
- Source-Radio Identification (ID)
- Low Battery LED Indication

Programming Overview

The RF system's programmable feature settings can be modified to accommodate your unique requirements. Listed below are the various methods to configure scanner and Base Station units:

> **NOTE**
>
> **Base Stations and the scanners linked to them must possess compatible configuration files.**

Scanner

1. The Base Station's configuration files can be automatically downloaded to the scanner at the time of linking. See the sections, *Linking the Scanner to a Base Station* and *Common Configuration* for more details.
2. The easiest, most comprehensive way to program the scanner is to use the Configurator Express™ On-Screen Programming Kit. See *References* for more information about this product.
3. The scanner can be configured using special programming bar codes like those contained in this section. For the most part, the programming instructions and bar codes on the following pages address this method of scanner configuration.

> **NOTE**
>
> **If you program the scanner using any of the methods above, the scanner will store the changes until reprogrammed or returned to factory defaults.**

Base Station

Base Station configuration is primarily performed by first programming a scanner with the desired options, then downloading the configuration to the Base Station from that scanner.

CAUTION	**Verify that the scanner and Base Station host interface types (RS-232, Keyboard Wedge, etc.) are matched before attempting to download any configuration files or perform any custom programming sessions. Go to Interface (I/F) selection on page x and set the scanner to the Base Station's I/F type.**

Use the bar code below to overwrite a Base Station's configuration file.

CAUTION	**After the Base Station receives the entire configuration, it will drop all links to scanners other than the scanner transmitting the new configuration. This will require the user to relink all other scanners (see *Linking the Scanner to a Base Station*). Prior to the time of relinking, it is advisable to consider enabling the feature, *Common Configuration*, ensuring that the Base Station will attempt to share the new configuration with scanners as they are linked.**

Transmit Scanner Configuration to Base Station ---------

What Is Programming Mode?

The scanner must be placed into the Programming Mode state in order to accept programming commands. When programming using the bar code labels in this manual, the scanner is placed in Programming Mode by scanning the "SET" label at the top of most programming feature pages.

While in Programming Mode, the scanner only recognizes special programming bar codes. See the section, *LED and Beeper Indications* for information about scanner indications while in Programming Mode.

The Programming Session

Scanner programming allows you to customize the scanner's configuration to match your specific needs. A typical programming session is conducted as follows:

1. Scan the SET bar code at the top of the page. The scanner will emit one beep, indicating it has read the bar code and the green LED will flash on and off slowly while the scanner remains in Programming Mode. Normal scanning functions are disabled.
2. Scan the programming bar codes(s) to make the desired changes. With few exceptions, the scanner will emit a triple beep each time you scan a valid programming bar code..

NOTE

Not all features are available for all interfaces. The scanner will sound an error tone when scanning programming bar codes for features that cannot be used with the currently active interface. Only features supported by the currently active interface will be implemented.

NOTE

If you are enabling a different interface (I/F), we suggest/recommend that you change the I/F designation first and then proceed with other changes. Once a bar code is scanned that changes the scanner's I/F, all previous I/F configuration items scanned in the programming session are lost.

3. Scan the END label at the bottom of the page to save any new settings and exit Programming Mode. The scanner will sound a beep and reset upon exiting Programming Mode, and the green LED will return to its usual state (on steady or off).

   The scanner will not exit Programming Mode unless the END bar code is scanned or the scanner's battery is removed. Removing power during Programming Mode, before scanning the END label, will cause all new settings to be ignored. On power-up, the scanner will return to previous settings.

4. **Maintain a record of all changes made** to ensure that you know if the original factory settings have been changed. Use the following table to log your custom configuration changes.

RF Programmable Feature	Factory Default Setting	Your Setting	Comment
RF When to Beep	Option 7		
RF Beeper Volume	Vol 3		
RF Beeper Frequency	High		
RF Beep Duration	50ms		
Radio Transmit Power	High		
RF Channel Selection	Channel 1		
Transmission Retries Before Message Time-out	3 Retries		
Wait Time for ACK	200ms		
Wait Time for Scanner Power Shutdown	1 Second		
Wait Time Between Retries of Failed Trans-mission	90ms		
HACK Transmit Options	HACK upon Base Station transmission to host		
Wait Time for HACK From Host	1 Second		
Drop Links on Reset Option	Disable		
Drop Oldest Links Option	Enable		

Common Configuration	Disable		
Set Maximum Linked Scanners	8		
Source-Radio Identification (ID)	Don't Include		
Low Battery LED Indication	Enable		

Programming Sequence

To modify a scanner feature (item), the programming bar codes contained in this manual must be scanned in a given sequence depending upon the feature being programmed (as shown in Table 5). There are three possible programming sequences:

A. Programming sample A (the most commonly used format) demonstrates how three bar codes are scanned in sequence to do the following:

   1. Place the scanner in Programming Mode (SET bar code).
   2. Scan the Item Tag[1] that will enable the new feature.
   3. End the programming session and reset the scanner (END bar code).

B. Sample B provides an example of a programming feature requiring the entry of a range value. Like sample A, the scanner is placed in Programming Mode and an Item Tag[1] is scanned. Then, a value must be entered before ending the programming session. In the example, three digits must be scanned from the number pad in Appendix B. This type of format, requiring a total of as many as six programming bar codes, is necessary to allow flexible programming with larger item value numeric ranges.

C. The programming sequence shown in example C requires scanning of a single, extended length bar code. This special programming bar code contains all the data necessary to enter Programming Mode, set the Item Tag[1] and Item Value, and exit Programming Mode (all in one step).

1. An "Item Tag" is a term used to describe an assigned number, which is encoded in a programming bar code, that toggles (selects, enables, disables, etc.) a specific programming feature.

Table 5. Programming Sequence

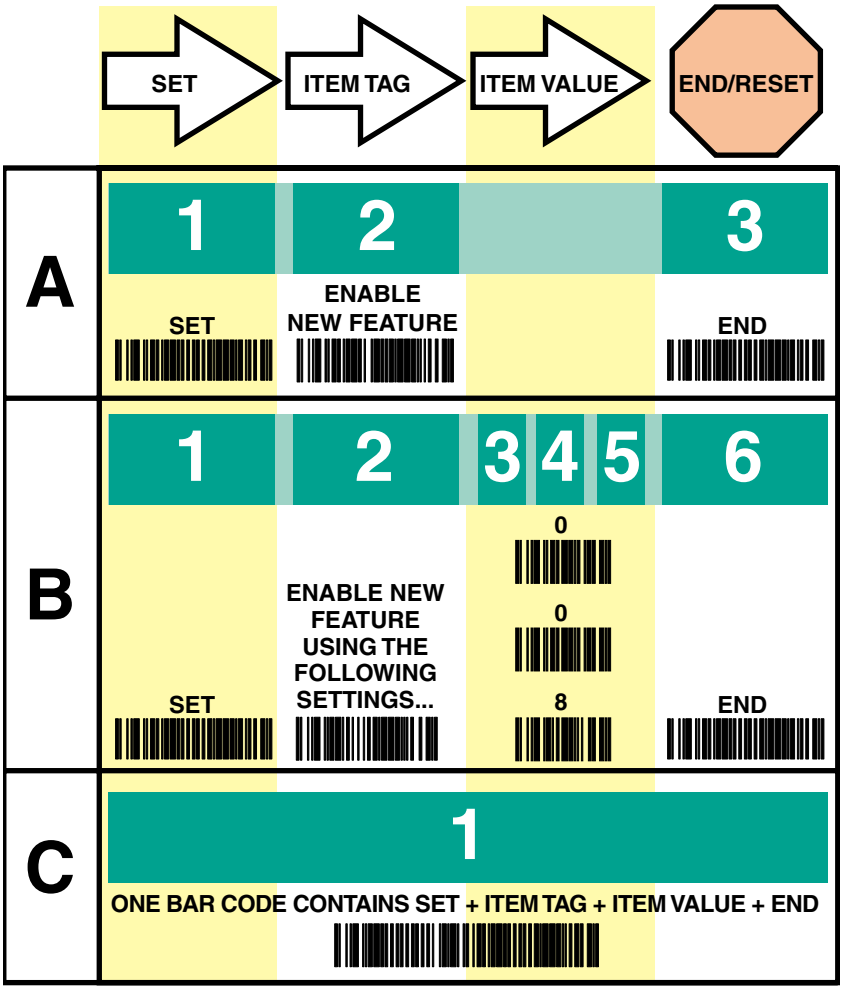

Scanner vs. Base Station Features

Some programming features are specific to either the scanner (hand-held unit) or the Base Station, while others are applicable to both. Each feature in this manual is marked with an indicator as to which unit(s) it is applicable.

Feature is specific to scanner ONLY

Feature is specific to Base Station ONLY

Feature is applicable to scanner *and* Base Station.

NOTE

When programming using bar codes via the scanner, it is important to remember that features affecting the Base Station WILL NOT be enabled until the new configuration is downloaded to the Base Station using the feature *Transmit Scanner Configuration to Base Station* on page 33.

Interface (I/F) Selection

It is very important that the scanner and Base Station are each configured to operate with the same interface (I/F) type as the host terminal.

> **NOTE**
>
> **The Base Station uses a "smart" cable, which automatically sets the Base Station to the correct I/F upon power-up and connection to the appropriate host.**

SET ----------

Enable Wand Emulation ---------

Enable Standard RS-232 ---------

Enable Wincor Nixdorf RS-232 ---------

Enable IBM Port 5B ---------

Enable IBM Port 9B ---------

Enable IBM Port 17 ---------

Enable IBM Port E ---------

Enable Keyboard Wedge Type A[a] ---------

Enable Keyboard Wedge Type B ---------

Enable Keyboard Wedge Type C ---------

Enable Keyboard Wedge Type D ---------

Enable Keyboard Wedge Type E ---------

Enable Keyboard Wedge Type F ---------

Enable Keyboard Wedge Type G ---------

Enable Keyboard Wedge Type H ---------

Enable Keyboard Wedge Type I ---------

Enable Keyboard Wedge Type J ---------

END ----------

a. See Table 6 for the specific interfaces supported by each of the keyboard types listed above. See the following section Universal Keyboard Wedge I/F Selection to enable that interface type.

Table 6. Keyboard Wedge I/F Selection

I/F Type	PCs Supported
A	PC/XT w/Alternate Key Encoding
B	AT, PS/2 25-286, 30-286, 50, 50Z, 60, 70, 80, 90 & 95 w/Alternate Key Encoding
C	PS/2 25 and 30 w/Alternate Key Encoding
D	PC/XT w/Standard Key Encoding
E	AT, PS/2 25-286, 30-286, 50, 50Z, 60, 70, 80, 90 & 95 w/Standard Key Encoding
F	PS/2 25 and 30 w/Standard Key Encoding
G	IBM 3xxx w/122 keyboard
H	IBM 3xxx w/102 keyboard
I	PS/55 5530T w/104 keyboard
J	NEC 9801

Universal Keyboard Wedge I/F Selection

To activate the Universal Keyboard Wedge interface, follow these instructions:

1. Scan the START bar code.
2. Determine the I.D. of the terminal/keyboard. This information is available in the Universal Keyboard Wedge Connectivity Guide (R44-2039), or refer to the *Terminal/Keyboard Settings* section below for a listing of the most common keyboard I.D.s.
3. Scan the ACTIVATE UNIVERSAL KEYBOARD WEDGE INTERFACE bar code on the following page.
4. Using the "number pad" in Appendix B, scan in the digits for the keyboard I.D. number you determined in step 2.
5. Scan the END bar code.

SET ----------

Activate Universal Keyboard Wedge Interface ---------

Scan the digit(s) representing the desired keyboard interface type using the Number Pad in Appendix B, then scan the END bar code.

END ----------

Terminal/ Keyboard Settings

The list below contains the most common terminal/keyboard types. If your specific system is not listed below, consult the Keyboard Wedge Connectivity Guide (P/N R44-2039) for a detailed listing of terminal/ keyboard types. A copy of the guide can be obtained from the internet at **www.pscnet.co**m, or call your dealer for customer support information.

Keyboard	Terminal I.D.
PC XT	10
PC AT, PS2	11
MAC	25

RF Beeper Settings

The RF version of the scanner exhibits different beeper behavior than standard (non-RF) models. For more information about RF beeper indications, see the section, LED and Beeper Indications.

NOTE

The following descriptions highlight configurable beeper functions that are unique to RF handheld scanners. All other beeper functions supported by the standard version of the scanner are supported by RF models.

Good Read Beep — When good read beep is enabled, this beep sounds at the time the scanner successfully reads a bar code. Selectable settings for the good read beep include:

- RF When to Beep
- Beeper Volume
- Good Read Beep Frequency
- Beep Duration

ACK Beep — The scanner can sound an acknowledgement (ACK) beep to indicate when the Base Station has acknowledged to the scanner that is has received a successful data transmission from the scanner. This beep is also sounded upon a successful channel change sequence or a successful configuration transmission.

Transmission Error Beep — Another selectable indicator beep is the transmission error beep. This beep sounds to indicate an error in transmission between the RF devices.

Link Beep — The handheld scanner will sound a special link beep upon successfully linking with a Base Station. This indication cannot be disabled and is not programmable, other than that it shares the same Beeper Volume setting as other beeper indications set using that feature.

Unlink Beep — When a scanner is successfully unlinked from a Base Station, a unique unlink beep is sounded. This beep is not programmable, and also sounds at the same volume set for Beeper Volume.

RF When to Beep

Feature is specific to scanner ONLY

Several options are available to specify how the RF handheld scanner will beep to indicate a good read. Settings are based on the enable/disable status desired for three selectable beep indications:

- Good Read Beep
- Acknowledgement (ACK) Beep
- Transmission Error Beep

The available options are described and numbered in Table 7 to correspond with the programming bar codes provided for this feature.

NOTE

These settings supersede any settings made using the generic "When to Beep" feature listed in the PowerScan Programming Manual.

Table 7. RF When to Beep Options

#	Good Read Beep	ACK Beep	Transmission Error Beep
0	Disabled	Disabled	Disabled
1	Disabled	Disabled	Enabled
2	Disabled	Enabled	Disabled
3	Disabled	Enabled	Enabled
4	Enabled	Disabled	Disabled
5	Enabled	Disabled	Enabled
6	Enabled	Enabled	Disabled
7	Enabled	Enabled	Enabled

RF When to Beep Options (continued)

SET ----------

When to Beep Option #0 ---------

When to Beep Option #1 ---------

When to Beep Option #2 ---------

When to Beep Option #3 ---------

When to Beep Option #4 ---------

When to Beep Option #5 ---------

When to Beep Option #6 ---------

When to Beep Option #7 ---------

END ----------

RF Beeper Volume

Feature is specific to scanner ONLY

The volume at which the beeper sounds for ACK, transmission error, link, or unlink beeps (but not the good read beep[1]) are all affected by this setting. Select volume #1 (25% duty cycle), volume #2 (35% duty cycle), or volume #3 (50% duty cycle).

SET ----------

RF Beeper Volume #1 ---------

RF Beeper Volume #2 ---------

RF Beeper Volume #3 ---------

END ----------

1. Good read beep volume is selectable via the features available in the PowerScan Programming Manual (P/N R44-1840). See *References* for information about acquiring other manuals.

RF Beeper Frequency

Feature is specific to scanner ONLY

This setting affects the frequency at which the ACK beep is sounded, and is independent of the frequency setting for the good read beep. When the ACK beep is sounded at a different frequency than the good read beep, this can provide a clearer distinction between the tones. Select low frequency (760Hz), medium frequency (1250Hz), or high frequency (2400Hz).

SET ----------

RF Beeper Low Frequency ---------

RF Beeper Medium Frequency ---------

RF Beeper High Frequency ---------

END ----------

RF Beep Duration

Feature is specific to scanner ONLY

The duration of time that an ACK beep is sounded is selectable using this setting. RF beep duration can be set in increments of 10 ms (tolerance of +/- 10%) from 0 to 2.55 seconds.

SET ----------

Set RF Beep Duration ---------

Scan three digits representing the desired duration using the Number Pad in Appendix B, padded with leading zeros (example: 008 = 80ms, 025 = 250ms, 100 = 1 second, etc.), then scan the END bar code.

END ----------

Radio Transmit Power

Feature is applicable to scanner *and* Base Station.

NOTE

Remember, programming changes to the Base Station have no effect until the new configuration is downloaded via the feature *Transmit Scanner Configuration to Base Station* on page 33.

The power level at which the radio signal is transmitted between the devices is selectable to be either low or high. This setting allows adjustment to a low setting to minimize potential radio interference caused by communication between the devices, or provides a high setting to increase the signal power which would enable clearer communication over longer distances.

SET ----------

Radio Transmit Power = Low ---------

Radio Transmit Power = High ---------

END ----------

RF Channel Selection

Feature is applicable to scanner *and* Base Station.

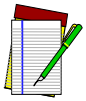

NOTE

Channel selection bar codes are of the type C programming sequence category (see *Programming Sequence* on page 36), and do not require you to scan accompanying SET or END bar codes.

Radio communications between the handheld scanner and its linked Base Station can be carried over one of ten different allowable frequencies (channels). Select alternate channels to improve communications between devices in noisy RF environments.

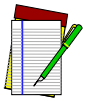

NOTE

Available channel frequencies will vary according to the country/model of the scanner.

When a new channel is selected, the scanner sends a change-of-channel message to the Base Station. After the Base Station has acknowledged receipt of the message, both the scanner and the Base Station switch their radio channels to the new channel (reference *LED and Beeper Indications* for information regarding scanner and Base Station acknowledgement signals at this point). All further communication is done on the new channel.

NOTE

Any other scanner that happens to be linked to that Base Station will be unable to communicate with the Base Station until it has switched to the new channel. To accomplish this, scan the Base ID label with each scanner you desire to be linked to the Base Station. This action will automatically set each scanner to the correct new channel.

Select Radio Channel 0 ---------

Select Radio Channel 1 ---------

Select Radio Channel 2 ---------

Select Radio Channel 3 ---------

Select Radio Channel 4 ---------

Select Radio Channel 5 ---------

Select Radio Channel 6 ---------

Select Radio Channel 7 ---------

Select Radio Channel 8 ---------

Select Radio Channel 9 ---------

Transmission Retries Before Message Time-out

Feature is applicable to scanner *and* Base Station.

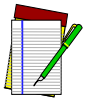

NOTE

Remember, programming changes to the Base Station have no effect until the new configuration is downloaded via the feature *Transmit Scanner Configuration to Base Station* on page 33.

When the scanner attempts to transmit data to the Base Station, communication may not always occur on the first try due to interference, signals from other scanners in the queue, etc.. This setting defines the number of transmission retries the scanner/Base Station will attempt before the message gives up tryng to successfully resend/transmit the message (times out). If the specified retry count is exceeded, the scanner will sound a transmission error beep (when transmission error beep is enabled).

In a noisy RF environment, a large number of retries may allow a transmission to get through to the Base Station, but at the cost of increased time-out (should the transmission fail). To maximize battery life, set this feature to the lowest optimal number of retries.

Selectable range for this setting is 0-15 retries.

SET ----------

0 Retries ---------

1 Retry ---------

2 Retries ---------

3 Retries
(recommended) ---------

4 Retries ---------

5 Retries ---------

6 Retries ---------

7 Retries ---------

8 Retries ---------

9 Retries ---------

10 Retries ---------

11 Retries ---------

12 Retries ---------

13 Retries ---------

14 Retries ---------

15 Retries ---------

END ----------

Wait Time for ACK

Feature is applicable to scanner *and* Base Station.

NOTE

Remember, programming changes to the Base Station have no effect until the new configuration is downloaded via the feature *Transmit Scanner Configuration to Base Station* on page 33.

This setting defines a time period allowed once the scanner has sent data to the Base Station for that Base Station to send an acknowledgement (ACK) back to the scanner, signalling receipt of the data. This feature is used to streamline the scanning speed of your system.

The range for this delay is 0.08 - 2.55 seconds in 10ms increments.

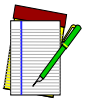

NOTE

Selecting longer values for this feature will decrease the battery life between charges.

SET ----------

Set Wait Time for ACK ---------

Scan three digits representing the desired delay using the Number Pad in Appendix B. Be sure the number is padded with leading zeros (example: 008 = 80ms, 025 = 250ms, 100 = 1 second, etc.), then scan the END bar code.

END ----------

Wait Time For Scanner Power Shutdown

Feature is specific to scanner ONLY

To conserve battery life, the handheld scanner can be automatically shut down when it has not been in use for a given period. A trigger pull or other stimulus will then be required to reactivate the scanner. The idle duration determines how long the scanner stays on/active after each use. Range for this feature is a setting of 1 to 120 seconds in one-second increments. A setting of one second is recommended.

NOTE

Selecting higher values for this feature will effect the length of battery life.

SET ----------

Set Wait Time for Scanner Power Shutdown ---------

Scan three digits representing the desired delay using the Number Pad in Appendix B. Be sure the number is padded with leading zeros (example: 001 = 1 second, 025 = 25 seconds, 100 = 100 seconds, etc.), then scan the END bar code.

END ----------

Wait Time Between Retries of Failed Transmission

Feature is applicable to scanner *and* Base Station.

NOTE

Remember, programming changes to the Base Station have no effect until the new configuration is downloaded via the feature *Transmit Scanner Configuration to Base Station* on page 33.

In conjunction with the previous feature, TRANSMISSION RETRIES BEFORE MESSAGE TIME-OUT, this feature defines the duration of time the system must wait before re-trying a transmission of data between the scanner and the Base Station. Consideration for this setting would be to ensure that enough time elapses between tries to avoid encountering the source of the original transmission conflict, while being short enough to avoid causing a substantial increase in the time required to successfully transmit the message.

Wait range can be set from 5ms to 255ms in one-millisecond increments, and is multiplied by the amount of retries selected via the feature, TRANSMISSION RETRIES BEFORE MESSAGE TIME-OUT (TRBMTO) to determine the total duration. For example if this feature (WAIT TIME BETWEEN RETRIES OF FAILED TRANSMISSION) is selected to be 80 ms, and TRBMTO feature is selected to be 3, the resulting total duration between retries would be 80 x 3, or 240ms total.

SET ----------

Set Wait Time Between Retries
of Failed Transmission ---------

Scan three digits representing the desired delay using the Number Pad in Appendix B. Be sure the number is padded with leading zeros (example: 005 = 5ms, 065 = 65ms, 250 = 250ms, etc.), then scan the END bar code.

END ----------

HACK Transmit Options

Feature is applicable to scanner *and* Base Station.

NOTE

Remember, programming changes to the Base Station have no effect until the new configuration is downloaded via the feature *Transmit Scanner Configuration to Base Station* on page 33.

A Host Acknowledgement (HACK) message is a signal sent to the scanner via the Base Station indicating the host has received bar code data previously transmitted by that scanner. This feature determines when the Base Station should send the HACK to the scanner. Choices are:

- Send HACK as soon as the Base Station receives the scanner's transmission. This option is recommended for installations where multiple scanners are linked to one Base Station.
- Send HACK as soon as the Base Station completes transmission to the host. This option is recommended for installations where only a single scanner is linked to one Base Station.
- Send HACK after the host transitions the CTS line from inactive to activate (using CTS scan control). RS-232 ONLY.
- Send HACK after host returns ACK to Base Station. RS-232 with ACK/NAK turned on ONLY.

SET ----------

HACK upon receipt of scanner transmission ---------

HACK upon Base Station transmission to the host ---------

HACK after host transitions CTS line (RS-232 ONLY) ---------

HACK after host returns ACK (RS-232 ONLY) ---------

END ----------

Wait Time For HACK From Host

Feature is specific to scanner ONLY

This setting specifies the time the scanner must wait to receive a HACK message back from the host before giving up and registering a transmission error. Selectable range for this wait time is 20ms to 5.1 seconds in 20ms increments. It is recommended that this value be set at no less than one second.

NOTE

Host turnaround (ACK) time is variable. This item (HACK) should be set based on settings for the features *Wait Time for ACK* and *Transmission Retries Before Message Time-out*. For example if ACK is set to one second and retries are set to three, HACK should be set at three seconds.

SET ----------

Set Wait Time For HACK ---------

Scan three digits representing the desired delay using the Number Pad in Appendix B. Be sure the number is padded with leading zeros (example: 001 = 20ms, 100 = 1 second, 255 = 5.1 seconds, etc.), then scan the END bar code.

END ----------

Drop Links on Reset Option

Feature is specific to Base Station ONLY

> **NOTE**
>
> **Remember, programming changes to the Base Station have no effect until the new configuration is downloaded via the feature *Transmit Scanner Configuration to Base Station* on page 33.**

When enabled, this option causes the Base Station to drop its links to any and all scanners whenever power is reset/cycled. This provides a simple way to ensure that when reconfiguring a system, scanners do not need to be located and individually unlinked.

SET ----------

Drop all links on reset (ENABLE) ---------

Do not drop all links on reset (DISABLE) ---------

END ----------

Drop Oldest Links Option

Feature is specific to Base Station ONLY

NOTE

Remember, programming changes to the Base Station have no effect until the new configuration is downloaded via the feature *Transmit Scanner Configuration to Base Station* on page 33.

This feature can be enabled to better manage the linking of new scanners to a multi-point system. Here's how it works: When a new scanner is linked to a Base Station that is already linked to its maximum amount of scanners, an earlier-linked scanner that has been inactive for the longest period of time will be automatically unlinked from the system to make room for the new scanner.

When this feature is disabled, scanners can be linked up to the maximum number set via the programming feature, *Set Maximum Linked Scanners*, or the default maximum, which is eight scanners. Attempts to link additional scanners beyond these limits will fail.

SET ----------

Drop oldest links (ENABLE) ---------

Do not drop oldest links (DISABLE) ---------

END ----------

Feature is applicable to scanner *and* Base Station.

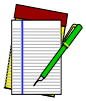

NOTE

Remember, programming changes to the Base Station have no effect until the new configuration is downloaded via the feature *Transmit Scanner Configuration to Base Station* on page 33.

When this option is enabled, the Base Station attempts to share its configuration with a scanner as that scanner links to the Base Station. If, during linking, a scanner's configuration file does not match the Base Station's current settings, the Base Station attempts to transmit to the scanner and overwrite the configuration file with its own.

CAUTION

Since a new/replacement scanner may have been shipped with a custom configuration or may have been modified with other special programming, it may not be desirable to download a potentially older configuration from an existing Base Station. In this case, consider uploading the scanner's newer configuration to the Base Station instead.

If the need is to share the scanner's configuration files to the Base Station, use the Transmit Scanner Configuration to Base Station bar code. *Base Station* on page 33.

SET ----------

ENABLE Common Configuration ---------

DISABLE Common Configuration ---------

END ----------

Set Maximum Linked Scanners

Feature is specific to Base Station ONLY

NOTE

Remember, programming changes to the Base Station have no effect until the new configuration is downloaded via the feature *Transmit Scanner Configuration to Base Station* on page 33.

By default, as many as eight scanners can be linked to one Base Station. This feature allows you to further limit allowable linked scanners. Designate a number of scanners that can link from one to eight.

SET ----------

Maximum Linked Scanners = 1 ---------

Maximum Linked Scanners = 2 ---------

Maximum Linked Scanners = 3 ---------

Maximum Linked Scanners = 4 ---------

Maximum Linked
Scanners = 5 ---------

Maximum Linked
Scanners = 6 ---------

Maximum Linked
Scanners = 7 ---------

Maximum Linked
Scanners = 8 ---------

END ----------

Source-Radio Identification (ID)

Feature is specific to Base Station ONLY

NOTE

Remember, programming changes to the Base Station have no effect until the new configuration is downloaded via the feature *Transmit Scanner Configuration to Base Station* on page 33.

This feature allows you to include source-radio identification[1] (represented by six ASCII bytes) along with bar code data transmitted to the host. Enable this feature to identify the individual scanner sending a given data transmission. Options for this feature are:

- Do not include source-radio ID
- Include source-radio ID as prefix
- Include source-radio ID as suffix

CAUTION

When included as a prefix or suffix, the source-radio ID is displayed immediately adjacent to the bar code data. If an additional prefix or suffix is included (e.g., other global prefix or suffixes are included), any source-radio ID prefix or suffix remains adjacent to (and is considered part of) the bar code data.

1. Each scanner has been pre-configured at the factory with its own unique six-character identification (source-radio ID).

SET ----------

Do not include source-radio ID ---------

Include source-radio as prefix ---------

Include source-radio as suffix ---------

END ----------

Low Battery LED Indication

Feature is specific to scanner ONLY

If this feature is enabled and the battery power in the scanner is low, the scanner's green LED flashes twice every time the trigger is pulled.

SET ----------

ENABLE Low Battery LED Indication ---------

DISABLE Low Battery LED Indication ---------

END ----------

Scanner Maintenance

The scan window will require occasional cleaning to remove smudges, dust and other debris. To ensure optimal performance, clean the Scan Window using a soft cloth or lens tissue dampened with isopropyl alcohol (or equivalent). See Figure 17. The scanner body can also be cleaned using this method.

Figure 17. Cleaning the Scan Window

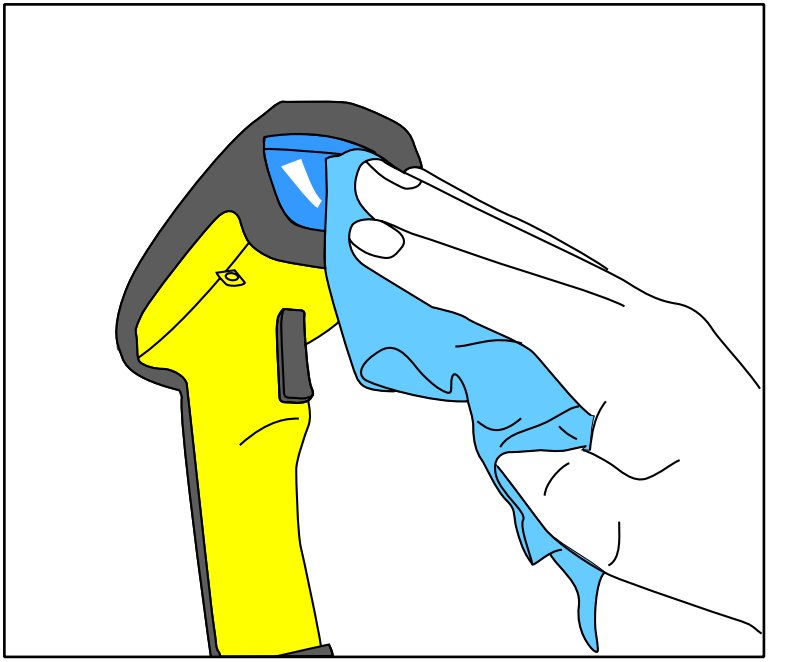

Base Station Maintenance

The Base Station requires no routine maintenance. If the antenna becomes damaged, a kit is available for its replacement. Use only PSC replacement antenna kits, since use of other antennas can adversely affect performance. Repair or replacement of other items such as charging contact pins, internal components, etc. must be performed by an authorized repair center.

Four Station Charger Maintenance

Four Station Charger battery contact replacement kits are available. See the section, *References*, for information about attaining replacement kits.

Troubleshooting

Troubleshoot your RF scanning system by performing the following checks:

For the RF system, ensure that...

- the battery is charged. See *Battery Charging and Maintenance* on page 12.
- the battery is properly installed. See *Installing the Battery* on page 7.
- the scanner is linked to the desired Base Station. See *Linking the Scanner to a Base Station* on page 10.
- the scanner is within reasonable operating range of the Base Station, with no major obstructions between the radio units such as thick walls or heavy machinery. (At the time of this writing, maximum line-of-sight range is specified at 100 feet.)
- there is no local signal interference with other radio-operated equipment. Consult *RF Channel Selection* on page 51 concerning selection of alternate channels.
- the Base Station is powered-on. You can verify the Base Station's AC Adapter by using a known-good AC Adapter.
- the Base Station interface cable is securely attached to the host. Consult your technical support manager or refer to your host system manual to identify the proper cable connection for the scanner. If necessary, verify interface cable function by using a known-good interface cable.

If the problem is specific to scanning, verify that...

- the bar codes you are trying to scan are of satisfactory quality. Bar code label verifiers are available from your dealer if you need precise reporting of label details. Bar codes that are damaged (wrinkled, smudged, or torn) may cause the scanner to read poorly or not at all. If bar code quality seems to be the problem, check to see if the scanner will read a barcode from Appendix A.
- the programmable setting for advanced Quadralogic™ decoding is set optimally for your system. (See *Enhanced Scanning for Hard-to-Read Bar Codes* on page 20.)

If the Scanner Fails to Link with the Base Station

Here are reasons why your scanner may not be linked with the Base Station:

- There may be too many scanners attempting a link with the same Base Station. A maximum of eight scanners may link with one Base Station at a given time. Reference the section, *Set Maximum Linked Scanners* for more information..

CAUTION

The limit imposed for linked scanners is selectable to either: 1) disallow any new, additional scanner to be linked beyond the set limit (this is the default), or 2) drop the link with the scanner *least* recently used. Be aware that in linking additional scanners to a single Base Station, you may inadvertently unlink another scanner from the Base Station.

- Links may be dropped by the Base Station if it has been reset (power cycled). It may be necessary to relink all scanners upon system reset. See also, *Drop Links on Reset Option*.

NOTES

NOTES

NOTES

Standard Warranty

PSC warrants to Customer that PSC's products will be free from defects in materials and workmanship for a period of two years from product shipment.
In order to obtain service under this Warranty, Customer must notify PSC of the claimed defect before the expiration of the Warranty period and obtain from PSC a return authorization number for return of the product to designated PSC service center. If PSC determines Customer's claim is valid, PSC will repair or replace product without additional charge for parts and labor. Customer shall be responsible for packaging and shipping the product to the designated PSC service center, with shipping charges prepaid. PSC shall pay for the return of the product to Customer if the shipment is to a location within the country in which the PSC service center is located. Customer shall be responsible for paying all shipping charges, duties, taxes, and any other charges for products returned to any other locations.
Warranty is subject to the limitations and exclusions set forth below. Warranty set forth above is in lieu of any other warranties, expressed or implied, including merchantability and fitness.

Exclusions

Warranty coverage shall not apply to any claimed defect, failure or damage which PSC determines was caused by: improper use of product; failure to provide product maintenance, including but not limited to cleaning of the scan windows in accordance with product manual; installation or service of product by other than PSC representatives; use of product with any other instrument, equipment or apparatus; modification or alteration of product. External cables and replacement of scan windows due to scratching, stains or other degradation will not be covered under the Warranty. Products returned for service must be accompanied by the original external power supplies for performance of service.

Limitations of Liability

PSC repair or replacement of defective product as set forth above is the customer's sole and exclusive remedy on account of claims of breach of warranty or product defect. Under no circumstances will PSC be liable to customer or any third party for any lost profits, or any incidental, consequential indirect, special or contingent damages regardless of whether PSC had advance notice of the possibility of such damages.

Assignment

Customer may not assign or otherwise transfer its rights or obligations under Warranty except to a purchaser or transferee of product. No attempted assignment or transfer in violation of this provision shall be valid or binding upon PSC.

Risk of Loss

Customer shall bear risk of loss or damage for product in transit to PSC. PSC shall assume risk of loss or damage for product in PSC's possession or product being returned to Customer by PSC, except such loss or damage as may be caused by the negligence of Customer, its agents or employees. In the absence of specific written instructions for the return of product to Customer, PSC will select the carrier, but PSC shall not thereby assume any liability in connection with the return shipment.

Appendix A
Sample Bar Codes

Use these test bar codes to check the scanner's ability to read the various symbologies represented.

Code 128

Code 128.Test

Code 39

CODE 39.TEST

Interleaved 2 of 5

0123456789

Standard 2 of 5

1 2 3 4 5 6 7 8 9 0

Codabar

A$99.95A

Code 93

Code 93.Test

MSI/Plessey

14476925 4

UPC-A

0 00112 23344 0

UPC-A with 2 digit Add-on

49

0 60992 01118 7

UPC-A with 5 digit Add-on

69000

0 08029 51041 8

UPC-E

0 998875 0

EAN-8

0021 0126

EAN-13

1 101234 567891

Appendix B
Number Pad

0 →

1 →

2 →

3 →

4 →

5 →

6 →

7 →

8 →

9 →

NOTES

DECLARATION OF CONFORMITY

PSC hereby declares that the Equipment specified below has been tested and found compliant to the following Directives and Standards:

Directives:	**EMC 89/336/EEC** **Low Voltage 73/23/EEC**
Standards:	**ETS 300 683 ETS 300 220-1** **EN60825 EN50082-1 EN60950**
Equipment Type:	**Bar Code Scanning Equipment**
Product:	**PowerScan™ RF Bar Code Scanner**

Charles W. Vanlue
Director, Corporate Quality
PSC, Inc.
959 Terry Street
Eugene, OR 97402
U.S.A.

Nigel Davis
Vice President
Europe, Middle East & Africa
PSC Bar Code Ltd.
Axis 3, Rhodes Way
Watford, England
WD24YW
UK

CE

Asia Pacific
PSC Hong Kong
Hong Kong
Telephone: [852]-2-584-6210
Fax: [852]-2-521-0291

Australia
PSC Asia Pacific Pty Ltd.
North Ryde, Australia
Telephone: [61] 0 (2) 9878 8999
Fax: [61] 0 (2) 9878 8688

France
PSC Sarl
LES ULIS Cedex, France
Telephone: [33].01.64.86.71.00
Fax: [33].01.64 46.72.44

Germany
PSC GmbH
Darmstadt, Germany
Telephone: + 49 (0) 61 51/93 58-0
Fax: + 49 (0) 61 51/93 58 58

Italy
PSC S.r.l.
Vimercate (MI), Italy
Telephone: [39] (0) 39/62903.1
Fax: [39] (0) 39/685496

Japan
PSC Japan K.K.
Shinagawa-ku, Tokyo, Japan
Telephone: 81 (0)3 3491 6761
Fax: 81 (0)3 3491 6656

Latin America
PSC S.A., INC.
Miami, Florida, USA
Telephone: (305) 539-0111
Fax: (305) 539-0206

United Kingdom
PSC Bar Code Ltd.
Watford, England
Telephone: 44 (0) 1923 809500
Fax: 44 (0) 1923 809 505

Corporate Headquarters
675 Basket Road
Webster, NY 14580-9787
Telephone: (716) 265-1600
Fax: (716) 265-6400

www.pscnet.com

PSC Scanning, Inc.
959 Terry Street
Eugene, OR 97402-9150
Telephone: (541) 683-5700
Fax: (541) 686-1702

Printed on recycled paper

©2000 PSC INC.

R44-2114 (Rev. C)

Printed in USA (11/00)