Shenzhen Hisiton Electronics Co., Ltd.

Mouse

Model Number: HL-898W

Prepared for : Shenzhen Hisiton Electronics Co., Ltd.
Jinxiang Bld. No.2 Floor 3,Shawei Industry District,Xinzhounan Road, Futian, Shenzhen.China.

Prepared By : Audix Technology (Shenzhen) Co., Ltd.
No. 6, Ke Feng Rd., 52 Block,
Shenzhen Science & Industrial Park,
Nantou, Shenzhen, Guangdong, China

Tel: (0755) 6639496

Report Number • ACS-20F100
Date of Test • Jul. 31~Aug. 01, 2000
Date of Report • Aug. 14, 2000

TABLE OF CONTENTS

Description Page

Test Report Declaration

1.GENERAL INFORMATION 1-1

1.1. Description of Device (EUT) 1-1
1.2. Tested Supporting System Details 1-1
1.3. Test Facility 1-3
1.4. Test Uncertainty 1-3

2.POWER LINE CONDUCTED EMISSION TEST 2-1

2.1. Test Equipment 2-1
2.2. Block Diagram of Test Setup 2-1
2.3. Power Line Conducted Emission Test Limits 2-1
2.4. Configuration of EUT on Test 2-2
2.5. Operating Condition of EUT 2-2
2.6. Test Procedure 2-2
2.7. Power Line Conducted Emission Test Results 2-3

3.RADIATED EMISSION TEST 3-1

3.1. Test Equipment 3-1
3.2. Block Diagram of Test Setup 3-1
3.3. Radiated Emission Limit 3-2
3.4. EUT Configuration on Test 3-2
3.5. Operating Condition of EUT 3-3
3.6. Test Procedure 3-3
3.7. Radiated Emission Test Result 3-4

4.DEVIATION TO TEST SPECIFICATIONS 4-1

APPENDIX I (2 pages)
APPENDIX II (3 pages)

TEST REPORT DECLARATION

Applicant	•	Shenzhen Hisiton Electronics Co., Ltd.
Manufacturer	•	Shenzhen Hisiton Electronics Co., Ltd.
EUT Description	•	Mouse

(A) MODEL NO. : HL-898W
(B) SERIAL NO. : F2000081001
(C) POWER SUPPLY : DC 5V

Test Procedure Used:

FCC Rules and Regulations Part 15 Subpart B Class B October 1998 & FCC / ANSI C63.4-1992

The device described above is tested by AUDIX TECHNOLOGY (SHENZHEN) CO., LTD. to determine the maximum emission levels emanating from the device. The maximum emission levels are compared to the FCC Part 15 Subpart Class B limits both radiated and conducted emissions.
The test results are contained in this test report and AUDIX TECHNOLOGY (SHENZHEN) CO., LTD. is assumed full responsibility for the accuracy and completeness of these tests. Also, this report shows that the Equipment Under Test (EUT) is to be technically compliant with the FCC requirements.
This report applies to above tested sample only. This report shall not be reproduced in part without written approval of AUDIX TECHNOLOGY (SHENZHEN) CO., LTD.
This report must not be used by the applicant to claim product endorsement by NVLAP or any agency of the U.S. Government.

Date of Test : Jul. 31~ Aug. 01, 2000

Prepared by : Fanny Yang 8/15, 2000
Fanny Yang / Assistant

Reviewer : Alex Deng 8/16'00
Alex Deng / Assistant Manager

For and on behalf of
AUDIX TECHNOLOGY (SHENZHEN) CO.,LTD.

Approved & Authorized Signer : .....
Authorized Signature(s)
Smart Tsai / Manager

Name of the Representative of the Responsible Party : _____

Signature : _____

1. GENERAL INFORMATION

1.1. Description of Device (EUT)

Description	:	Mouse
Model Number	:	HL-898W
Data Cable	:	Unshielded, Undetachable, 1.65m
Applicant	:	Shenzhen Hisiton Electronics Co., Ltd. Jinxiang Bld. No.2, Floor 3, Shawei Industry District, Xinzhounan Road, Futian, Shenzhen.China.
Manufacturer	:	Shenzhen Hisiton Electronics Co., Ltd. Jinxiang Bld. No.2, Floor 3, Shawei Industry District, Xinzhounan Road, Futian, Shenzhen.China.
Date of Test	:	Jul. 31~Aug.01, 2000

1.2. Tested Supporting System Details

1.2.1. PERSONAL COMPUTER

Main Board	• Model Number: P5A • Manufacturer: ASUS
VGA Card	• Manufacturer: NVIDIA • Model: NVIDIA RIVA TNT2
CPU	• Manufacture: AMD • Model: AMD-K6-2/300
Floppy Driver	• Manufacture: SONY • Model: MPF920-E
Hard Disk Driver	• Manufacture: SEAGATE • Model: ST38410A
Power Cord	
SPS	• Manufacture: SPARKLE

1.2.2. MONITOR

Model Number	•	RS-M1421
Serial Number	•	120954
Manufacturer	•	Ksai Electronics Co., Ltd.
Data Cable	•	Shielded, Detachable, 1.2m
FCC ID	•	KVCKS-M1421

1.2.3. KEYBOARD

Model Number	•	K9810
Serial Number	•	K981054711
Manufacturer	•	Delux
Data Cable	•	Shielded, Detachable, 1.9m
FCC ID	•	GOGDLK9810

1.2.4. KEYBOARD(USB)

Model Number	•	KU-8933
Serial Number	•	8H17800116
Manufacturer	•	Chicony Electronics Co., Ltd.
Data Cable	•	Shielded, Detachable, 1.9m

1.2.5. PRINTER

Model Number	•	2225C+
Serial Number	•	2937S56660
FCC ID	•	DSI6XU2225
Manufacturer	•	Hewlett Packard
Power Adapter	•	Hewlett Packard, Model 82241A
Data Cable	•	Shielded, Detachable, 1.5m

1.2.6. MODEM#1

Model Number	•	Moden 1414
Serial Number	•	980013573
Manufacturer	•	Aceex
Data Cable	•	Shielded, Detachable, 1.5m
FCC ID	•	IFAXDM1414
AC Adapter	•	M/N: SCP41-91000A

1.2.7. MODEM#2

Model Number	•	Moden 1414
Serial Number	•	980013577
Manufacturer	•	Aceex
Data Cable	•	Shielded, Detachable, 1.5m
FCC ID	•	IFAXDM1414
AC Adapter	•	M/N: SCP41-91000A

1.2.8. MOUSE(USB)

Manufacturer	•	InteliMouse
M/N	•	928S
FCC ID	•	C3KKMPS
Data Cable	•	Unshielded, 1.4m

1.3. Test Facility

Site Description

3m Anechoic Chamber	:	certificated by FCC, USA Aug. 18, 1997
3m & 10m Open Site	:	certificated by FCC, USA Feb. 13, 1998
EMC Lab.	:	certificated by VCCI, Japan Oct. 29, 1998
		certificated by DATech, German Feb. 02, 1999
		certificated by NVLAP, USA until Mar. 03, 2001 NVLAP Code: 200372-0
		certificated by DNV, Norway May 26, 1999
Name of Firm	:	Audix Technology (Shenzhen) Co., Ltd.
Site Location	:	No. 6, Ke Feng Rd., 52 Block, Shenzhen Science & Industrial Park, Nantou, Shenzhen, Guangdong, China

1.4. Test Uncertainty

Conducted Emission Uncertainty	=	±2.66dB
Radiated Emission Uncertainty	=	±4.26dB

2. POWER LINE CONDUCTED EMISSION TEST

2.1. Test Equipment

The following test equipments are used during the power line conducted emission test:

Item	Equipment	Manufacturer	Model No.	Serial No.	Last Cal.	Cal. Interval
1.	Test Receiver	Rohde & Schwarz	ESHS20	836600/006	Jun. 05, 00	1 Year
2.	L.I.S.N. #1	Kyoritsu	KNW-407	8-541-4	Jun. 05, 00	1 Year
3.	L.I.S.N. #2	EMCO	3825/2	9006-1660	Jun. 05, 00	1 Year
4.	Terminator	EMCO	50Ω	No. 1	Jun. 05, 00	1 Year
5.	Terminator	EMCO	50Ω	No. 2	Jun. 05, 00	1 Year
6.	RF Cable	FUJIKURA	RG-55/U	LISN Cable	Mar. 29, 00	1/2 Year
7.	Coaxial Switch	Anritsu	MP59B	M73989	Jun. 04, 00	1/2 Year

2.2. Block Diagram of Test Setup

2.2.1. Block diagram of connection between the EUT and simulators

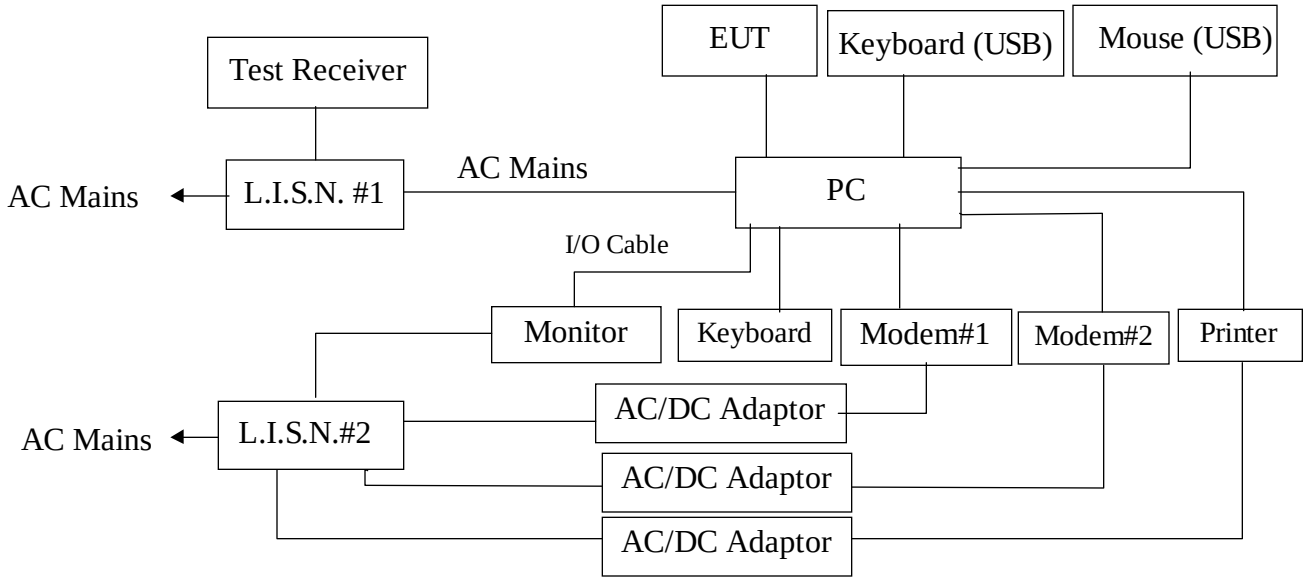

(EUT: Mouse)

2.3. Power Line Conducted Emission Test Limits

Frequency MHz	Maximum RF Line Voltage	
	μV	dB(μV)
0.45 ~ 30	250	48

Remarks: RF Line Voltage (dB(μV)) = 20 log RF Line Voltage (μV)

2.4. Configuration of EUT on Test

The following equipment are installed on Power Line Conducted Emission Test to meet the commission requirement and operating regulations in a manner which tends to maximize its emission characteristics in a normal application.

2.4.1. Mouse (EUT)

Model Number	: HL-898W
Serial Number	: F2000081001
Manufacturer	: Shenzhen Hisiton Electronics Co., Ltd.

2.4.2. Support Equipment : As Tested Supporting System Detail, in Section 1.2..

2.5. Operating Condition of EUT

2.5.1. Setup the EUT and simulator as shown as Section 2.2.
2.5.2. Turn on the power of all equipment.
2.5.3. Let the EUT work in test mode (Working) and measure it.

2.6. Test Procedure

The EUT is connected to the power mains through a line impedance stabilization network (L.I.S.N.). This provides a 50 ohm coupling impedance for the EUT. Please refer the block diagram of the test setup and photographs. Both sides of AC line are checked to find out the maximum conducted emission. In order to find the maximum emission levels, the relative positions of equipment and all of the interface cables shall be changed according to FCC ANSI C63.4-1992 on Conducted Emission Test.

The bandwidth of test receiver (R & S ESHS20) is set at 10KHz.

The frequency range from 450KHz to 30MHz is checked.

The test result are reported on Section 2.7., all the scanning waveforms for Conducted Emission Test are attached in Appendix I.

2.7. Power Line Conducted Emission Test Results

PASS.

The frequency range from 450KHz to 30 MHz is investigated. All emissions not reported below are too low against the prescribed limits.

Date of Test•	Aug. 01, 2000	Temperature•	26•
EUT •	Mouse	Humidity•	58•
Model No.•	HL-898W	Test Mode•	Working
Test Engineer•	Jack Zou		

Frequency MHz	Reading		Limit dB(μV)
	Phase VA dB(μV)	Phase VB dB(μV)	
0.479	*	40.3	48.0
0.485	39.1	*	48.0
0.559	*	36.3	48.0
0.565	39.3	*	48.0
5.950	*	44.4	48.0
6.190	*	45.5	48.0
6.675	**46.2**	**47.3**	**48.0**
7.525	40.2	*	48.0
12.655	37.2	*	48.0
13.195	*	37.2	48.0

Remark• 1. All readings are Quasi-Peak values.
2. The worst emission is detected at 6.675MHz with corrected signal level of 47.3dB(μV) (limit is 48dB(μV)) when the VB side of the EUT is connected to L.I.S.N.

Reviewer : 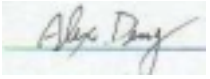

3. RADIATED EMISSION TEST

3.1. Test Equipment

The following test equipments are used during the radiated emission test:

3.1.1. For Anechoic Chamber

Item	Equipment	Manufacturer	Model No.	Serial No.	Last Cal.	Cal. Interval
1.	EMI Test Receiver	HP	85422E	3625A00181	Jun. 05, 00	1 Year
2.	Test Receiver	Rohde & Schwarz	ESVS20	830350/005	Jun. 05, 00	1 Year
3.	Amplifier	HP	8447D	2944A07794	Jun. 05, 00	1/2 Year
4.	Bilog Antenna	Chase	CBL6112A	2176	Sep. 26, 99	1 Year
5.	Computer	N/A	N/A	N/A	N/A	N/A
6.	Printer	NEC	P3800	568101448	N/A	N/A
7.	FR Cable	MIYAZAKI	5D-2W	3# Chamber No.1	Mar. 10, 00	1/2 Year
8.	FR Cable	MIYAZAKI	5D-2W	3# Chamber No.2	Mar. 10, 00	1/2 Year
9.	FR Cable	FUJIKURA	RG-55/U	3# Chamber No.3	Mar. 10, 00	1/2 Year
10.	FR Cable	FUJIKURA	RG-55/U	3# Chamber No.4	Mar. 10, 00	1/2 Year
11.	Coaxial Switch	Anritsu	MP59B	M74389	Jun. 05, 00	1/2 Year

3.2. Block Diagram of Test Setup

3.2.1. Block diagram of connection between the EUT and simulators

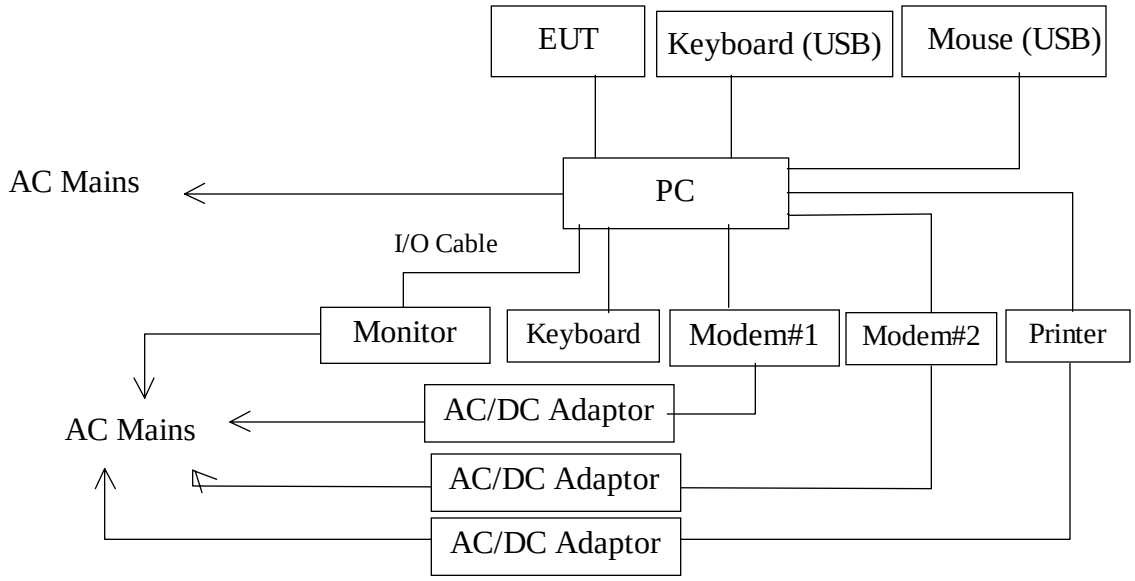

(EUT: Mouse)

3.2.2. In Anechoic Chamber

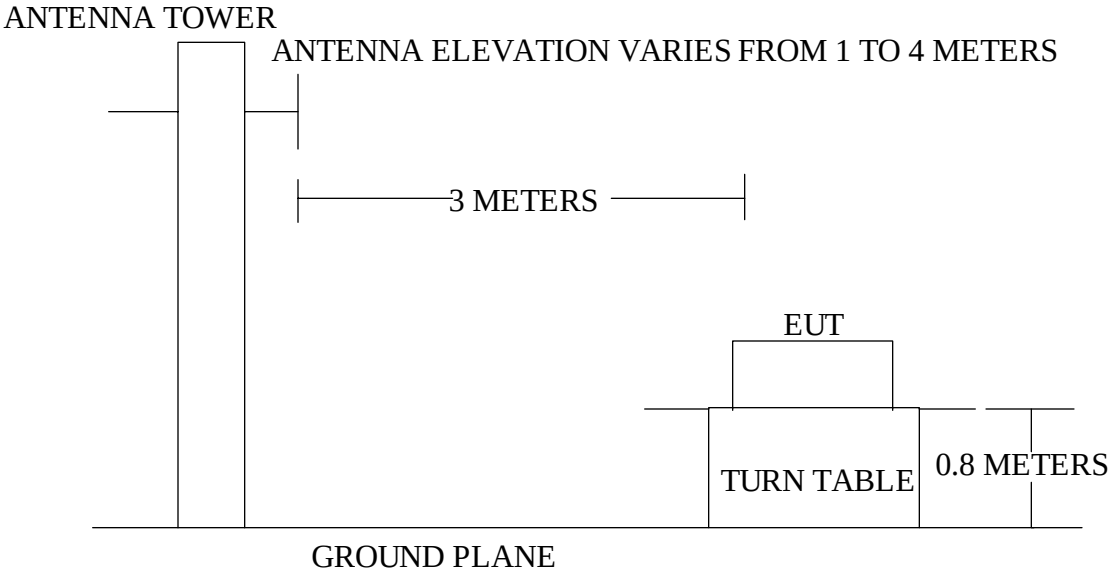

3.3. Radiated Emission Limit

FREQUENCY MHz	DISTANCE Meters	FIELD STRENGTHS LIMIT	
		μV/m	dB(μV)/m
30 ~ 88	3	100	40.0
88 ~ 216	3	150	43.5
216 ~ 960	3	200	46.0
960 ~ 1000	3	500	54.0

Remark • (1) Emission level (dB)μV = 20 log Emission level μV/m
(2) The smaller limit shall apply at the cross point between two frequency bands.
(3) Distance is the distance in meters between the measuring instrument, antenna and the closest point of any part of the device or system.

3.4. EUT Configuration on Test

The following equipment are installed on Radiated Emission Test to meet the commission requirements and operating regulations in a manner which tends to maximize its emission characteristics in normal application.

3.4.1. Mouse (EUT)

Model Number : HL-898W
Serial Number : F2000081001
Manufacturer : Shenzhen Hisiton Electronics Co., Ltd.

3.4.2. Support Equipment : As Tested Supporting System Detail, in Section 1.2..

3.5. Operating Condition of EUT

1. Setup the EUT as shown in Section 3.2..
2. Let the EUT work in test mode (Working) and test it.

3.6. Test Procedure

EUT and its simulators are placed on a turn table, which is 0.8 meter high above ground. The turn table can rotate 360 degrees to determine the position of the maximum emission level. EUT is set 3 meters away from the receiving antenna, which is mounted on a antenna tower. The antenna can be moved up and down between 1 meter and 4 meters to find out the maximum emission level. Broadband antenna (calibrated bilog antenna) is used as receiving antenna. Both horizontal and vertical polarization of the antenna are set on test.

The bandwidth of the EMI test receiver (R&S ESVS20) is set at 120KHz.
The frequency range from 30MHz to 1000MHz is checked.

The test mode (Working) is tested in Anechoic Chamber, and all the scanning waveforms are attached in Appendix II.

3.7. Radiated Emission Test Result

PASS.

The frequency range from 30MHz to 1000MHz is investigated. Please see the following pages.

Date of Test :	Jul. 31, 2000	Temperature :	26•
EUT :	Mouse	Humidity :	58•
Model No. :	HL-898W	Test Mode :	Working
Test Engineer:	Jack Zou		

Frequency MHz	Antenna Factor dB/m	Cable Loss dB	Meter Reading Horizontal dBμV	Emission Level Horizontal dBμV/m	Over Limits dBμV/m	Limits dBμV/m
100.215	13.50	2.62	15.00	31.12	-12.38	43.50
235.600	15.48	3.91	13.00	32.39	-13.61	46.00
303.000	18.18	4.29	12.90	35.37	-10.63	46.00
405.700	21.95	4.73	8.50	35.18	-10.82	46.00
504.800	22.88	5.07	7.50	35.45	-10.55	46.00
903.200	26.56	5.94	4.70	37.20	-8.80	46.00

Remark: 1. All readings are Quasi-Peak values.
2. Emission Level = Antenna Factor + Cable Loss + Meter Reading

Date of Test :	Jul. 31, 2000	Temperature :	26•
EUT :	Mouse	Humidity :	58•
Model No. :	HL-898W	Test Mode :	Working
Test Engineer:	Jack Zou		

Frequency MHz	Antenna Factor dB/m	Cable Loss dB	Meter Reading Vertical dBμV	Emission Level Vertical dBμV/m	Over Limits dBμV/m	Limits dBμV/m
31.940	18.52	0.91	9.90	29.33	-10.67	40.00
99.838	16.05	2.62	11.70	30.37	-13.13	43.50
402.480	21.69	4.72	9.70	36.12	-9.88	46.00
503.360	23.12	5.06	7.40	35.58	-10.42	46.00
720.640	25.18	5.60	7.60	38.38	-7.62	46.00
801.150	25.78	5.76	6.40	37.94	-8.06	46.00

Remark: 1. All readings are Quasi-Peak values.
2. Emission Level = Antenna Factor + Cable Loss + Meter Reading

Reviewer **:**

52 Block
Shenzhen Science & Ind. Park,Guangdong
Tel:0755-6639495?7 Fax:0755-6632877
AUDIX TECHNOLOGY (SHENZHEN) CO., LTD.

Data#: 7 File#: HISITON.EMI Date: 2000-07-31 Time: 17:20:08

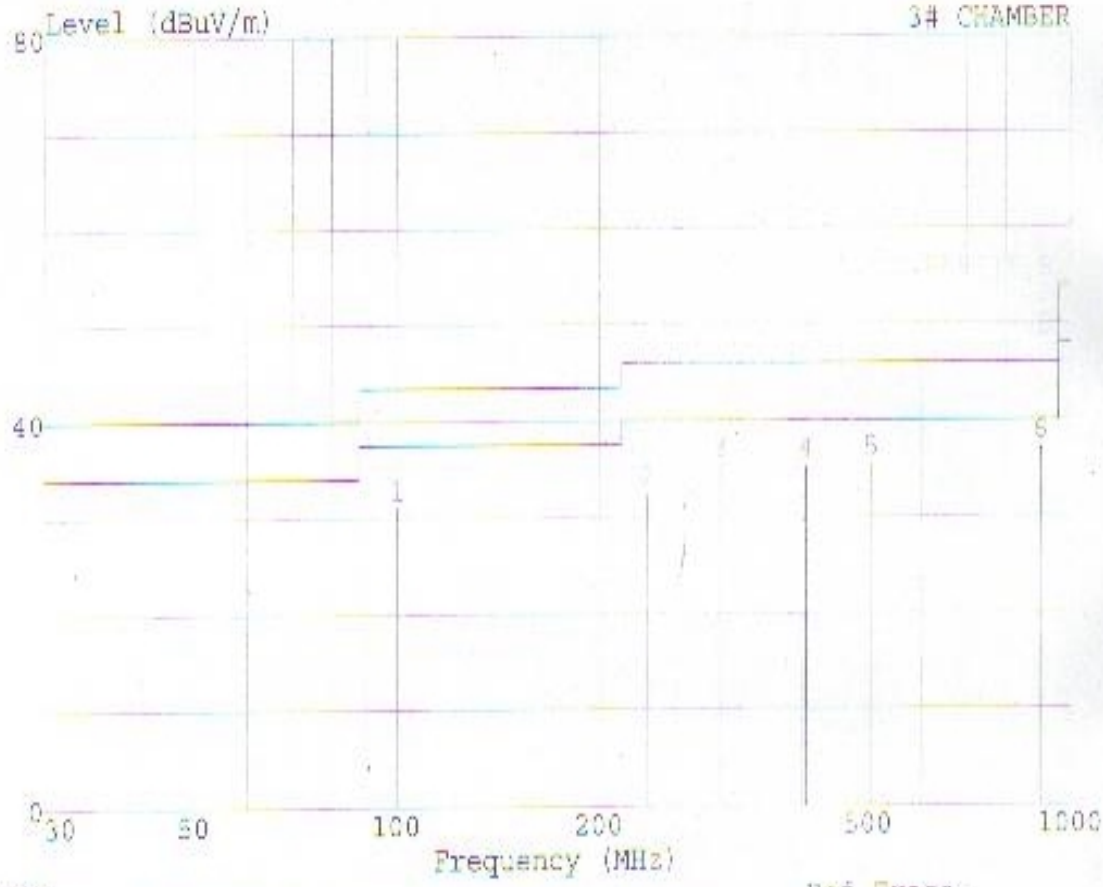

Trace: Ref Trace:
Condition: FCC PART15 B 3m 2176FACTOR HORIZONTAL
EUT: : MOUSE
POWER: PC Power 120V/60Hz
MEMO : HL-898W

Page: 1

	Freq	Level	Over Limit	Limit Line	Read Level	Probe Factor	Cable Loss	Preamp Factor	Remark
	MHz	dB	dB	dB	dB	dB	dB	dB	
1	100.215	31.12	-12.38	43.50	15.00	13.50	2.62	0.00	
2	235.600	32.39	-13.61	46.00	13.00	15.48	3.91	0.00	
3	303.000	35.37	-10.63	46.00	12.90	18.19	4.29	0.00	
4	405.700	35.18	-10.82	46.00	8.50	21.95	4.73	0.00	
5	504.800	35.45	-10.55	46.00	7.50	22.89	5.07	0.00	
6	903.200	37.20	-8.80	46.00	4.70	26.55	5.94	0.00	

AUDIX
52 Block
Shenzhen Science & Ind. Park,Guangdong
Tel:0755-6639495~7 Fax:0755-6632877
AUDIX TECHNOLOGY (SHENZHEN) CO., LTD.

Data#: 10 File#: HISITON.EMI Date: 2000-08-01 Time: 20:03:03

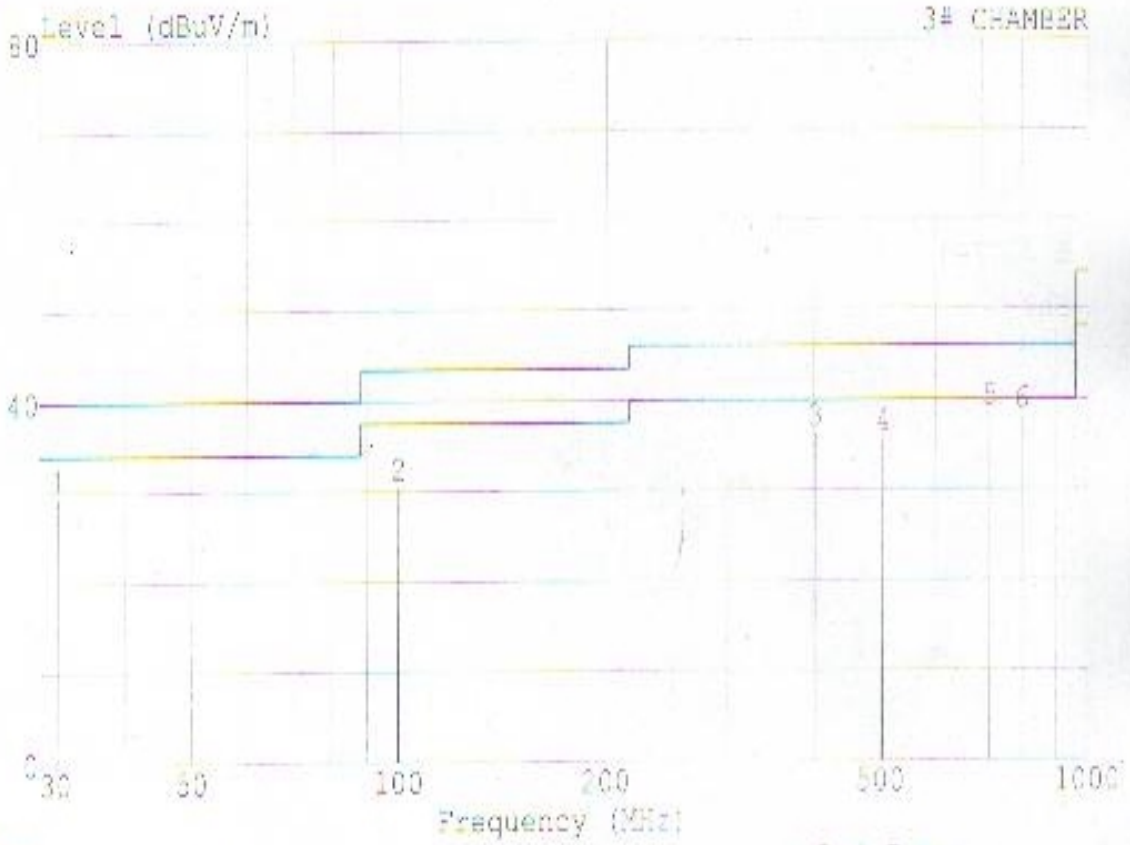

Trace: Ref Trace:
Condition: FCC PART15 B 3m 2176FACTOR VERTICAL
EUT: : MOUSE
POWER: PC Power 120V/60Hz
MEMO : HL-898W

Page: 1

	Freq	Level	Over Limit	Limit Line	Read Level	Probe Factor	Cable Loss	Preamp Factor	Remark
	MHz	dB	dB	dB	dB	dB	dB	dB	
1	31.940	29.33	-10.67	40.00	9.90	18.52	0.91	0.00	
2	99.838	30.37	-13.13	43.50	11.70	16.05	2.62	0.00	
3	402.480	36.12	-9.88	46.00	9.70	21.69	4.72	0.00	
4	503.360	35.58	-10.42	46.00	7.40	23.12	5.06	0.00	
5	720.640	38.38	-7.62	46.00	7.60	25.18	5.60	0.00	
6	801.150	37.94	-8.06	46.00	6.40	25.78	5.76	0.00	

4. DEVIATION TO TEST SPECIFICATIONS

[NONE]

5. PHOTOGRAPH

5.1. Photos of Power Line Conducted Emission Test

FRONT VIEW OF CONDUCTED EMISSION TEST

REAR VIEW OF CONDUCTED EMISSION TEST

5.2. Photos of Radiated Emission Test (In Anechoic Chamber)

FRONT VIEW OF RADIATED EMISSION TEST

REAR VIEW OF RADIATED EMISSION TEST

APPENDIX I

Conduction Emission Test
FCC PART15B

01. Aug 00 20:19

EUT:	MOUSE M/N:HL-898W
Manuf:	HISITION
Op Cond:	WORKING
Operator:	JACK
Test Spec:	VB PCPOWER 120V/60Hz
Comment:	Temp:26'
	Humi:58%

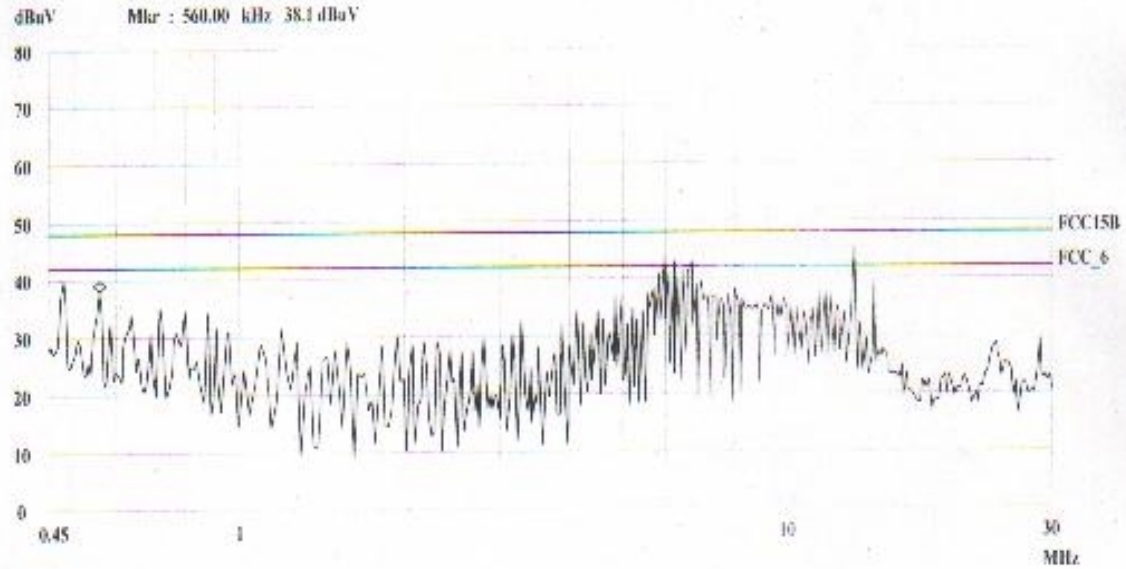

Conduction Emission Test
FCC PART15B

01. Aug 00 20:31

EUT:	MOUSE M/N:HL-898W
Manuf:	HISITION
Op Cond:	WORKING
Operator:	JACK
Test Spec:	VA PC POWER 120V/60Hz
Comment:	Temp:26'
	Humi:58%

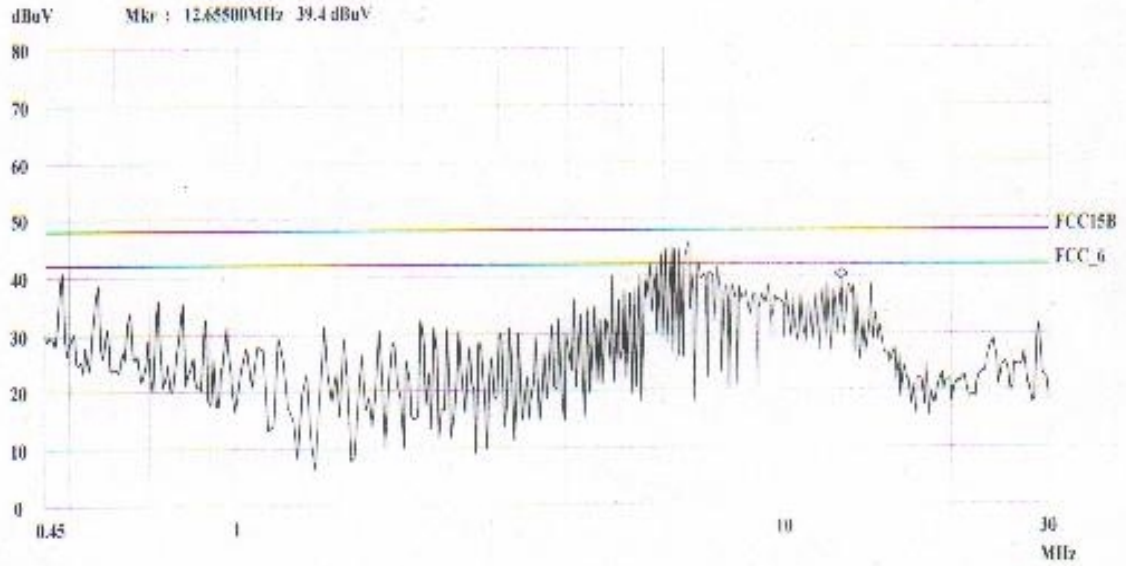

APPENDIX II

52 Block
Shenzhen Science & Ind. Park,Guangdong
Tel:0755-6639495?7 Fax:0755-6632877
AUDIX TECHNOLOGY (SHENZHEN) CO., LTD.

Data#: 6 File#: HISITON.EMI Date: 2000-07-31 Time: 17:13:31

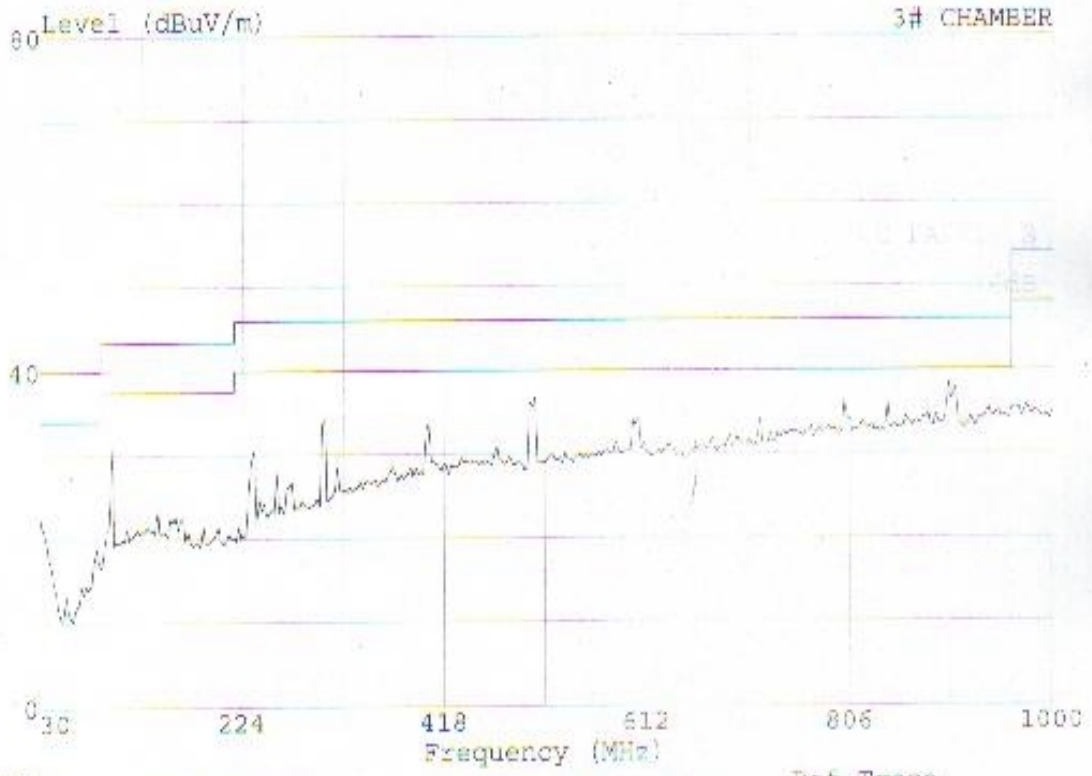

Trace: Ref Trace:
Condition: FCC PART15 B 3m 2176FACTOR HORIZONTAL
EUT: : MOUSE
POWER: PC Power 120V/60Hz
MEMO : HL-898W

52 Block
Shenzhen Science & Ind. Park,Guangdong
Tel:0755-6639495~7 Fax:0755-6632877
AUDIX TECHNOLOGY (SHENZHEN) CO., LTD.

Data#: 5 File#: HISITON.EMI Date: 2000-07-21 Time: 17:09:03

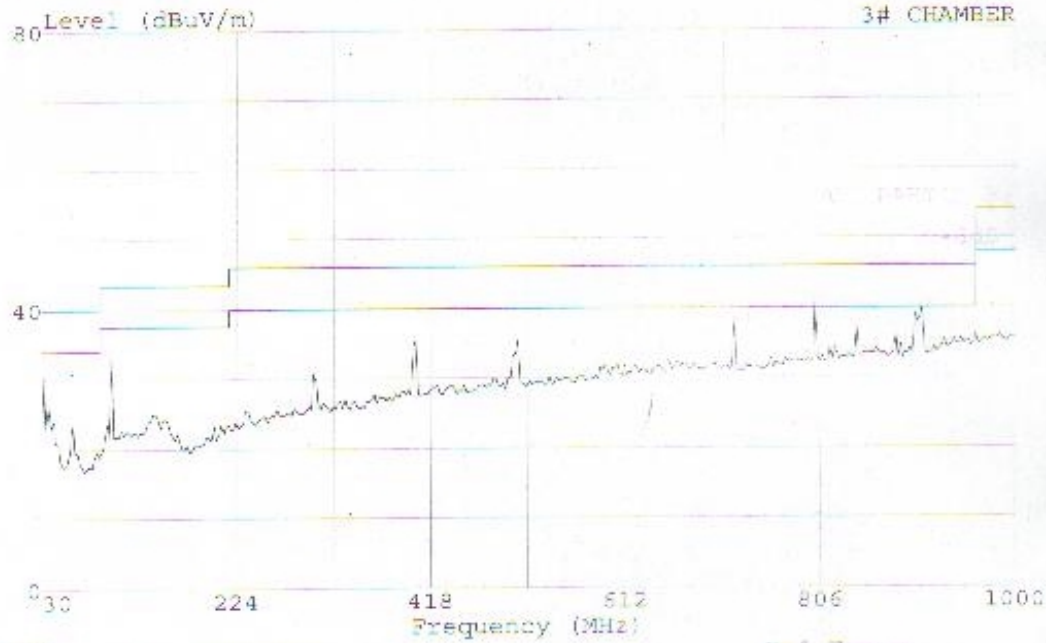

Trace: Ref Trace:
Condition: FCC PART15 B 3m 2176FACTOR VERTICAL
EUT: : MOUSE
POWER: PC Power 120V/60Hz
MEMO : HL-898W