USER MANUAL

RFID UHF

BD099

This document is a generic manual for RFID UHF module.

Please refer to printer manual for further information

CUSTOM®

FCC ID:OAH-4295017

This device complies with Part 15 of the FCC Rules. Operation is subject to the following two conditions: (1) this device may not cause harmful interference, and (2) this device must accept any interference received, including interference that may cause undesired operation.

For a host manufacture's using a certified modular, if (1) the module's FCC ID is not visible when installed in the host, or (2) if the host is marketed so that end users do not have straightforward commonly used methods for access to remove the module so that the FCC ID of the module is visible; then an additional permanent label referring to the enclosed module: "Contains Transmitter Module FCC ID: OAH-4295017" or "Contains FCC ID: OAH-4295017" must be used. The host OEM user manual must also contain clear instructions on how end users can find and/or access the module and the FCC ID.

NOTE: The manufacturer is not responsible for any radio or TV interference caused by unauthorized modifi cations to this equipment. Such modifi cations could void the user's authority to operate the equipment.
The equipment should be set up and used with a distance of approximately 8 inches (20cm) or more to user.
NOTE: This equipment has been tested and found to comply with the limits for a Class B digital device, pursuant to Part 15 of the FCC Rules. These limits are designed to provide reasonable protection against harmful interference in a residential installation.
This equipment generates, uses and can radiate radio frequency energy and, if not installed and used in accordance with the instructions may cause harmful interference to radio communications. However, there is no guarantee that interference will not occur in a particular installation. If this equipment does cause harmful interference to radio or television reception, which can be determined by turning the equipment off and on, the user is encourage to try to correct the interference by one or more of the following measures:

- Reorient or relocate the receiving antenna.
- Increase the separation between the equipment and receiver.
- Connect the equipment into an outlet on a circuit different from that to which the receiver is connected.
- Consult the dealer or an experienced radio/TV technician for help.

IC: 22752-4295017

Integratar must be mention this statemente in final devices manual statement

Contains Transmitter Module IC: 22752-4295017 or Contains IC: 22752-4295017

The following statements must be described on the user manual of the host device of this module

This device complies with Industry Canada licence-exempt RSS standard(s).
Operation is subject to the following two conditions:
(1) this device may not cause interference, and (2) this device must accept any interference, including interference that may cause undesired operation of the device.
The equipment should be set up and used with a distance of approximately 8 inches (20cm) or more to user.

Le présent appareil est conforme aux CNR d'Industrie Canada applicables aux appareils radio exempts de licence.
L'exploitation est autorisée aux deux conditions suivantes : (1) l'appareil ne doit pas produire de brouillage, et (2) l'utilisateur de l'appareil doit accepter tout brouillage radioélectrique subi, même si le brouillage est susceptible d'en compromettre le fonctionnement.
L'équipement doit être installé et utilisé avec une distance d'environ 20 cm (8 pouces) ou plus pour l'utilisateur.

General Antennas information

In the end devices only approved antenna can be used
Please refer to this manual for list of approved and authorized antennas

Antenna #1
Manufacturer: Custom S.P.A.
Model: BD106
Maximum gain: <0dBi

Antenna #2
Manufacturer: Custom S.P.A.
Model: ST069-AU
Maximum gain: <0dBi

THE CE MARK AFFIXED TO THE PRODUCT CERTIFY THAT THE PRODUCT SATISFIES THE BASIC SAFETY REQUIREMENTS.

The device is in conformity with the essential Electromagnetic Compatibility and Electric Safety requirements laid down in Directives 2014/30/EU and 2014/35/EU inasmuch as it was designed in conformity with the provisions laid down in the following Standards:

- EN 55032 Class B *(Limits and methods of measurements of radio disturbance characteristics of Information Technology Equipment)*
- EN 55024 *(Information Technology Equipment – Immunity characteristics – Limits and methods of measurement)*
- EN 60950-1 *(Safety of information equipment including electrical business equipment)*

The device is in conformity with the essential requirements laid down in Directives 2014/53/EU about devices equipped with intentional radiators The Declaration of Conformity and other available certifications can be request to support@custom.it please providing the correct part number shown on product label or in the invoice.

GUIDELINES FOR THE DISPOSAL OF THE PRODUCT

The crossed-out rubbish bin logo means that used electrical and electronic products shall NOT be mixed with unsorted municipal waste. For more detailed information about recycling of this product, refer to the instructions of your country for the disposal of these products.

- Do not dispose of this equipment as miscellaneous solid municipal waste, but arrange to have it collected separately.
- The re-use or correct recycling of the electronic and electrical equipment (EEE) is important in order to protect the environment and the wellbeing of humans.
- In accordance with European Directive WEEE 2002/96/EC, special collection points are available to which to deliver waste electrical and electronic equipment and the equipment can also be handed over to a distributor at the moment of purchasing a new equivalent type.
- The public administration and producers of electrical and electronic equipment are involved in facilitating the processes of the re-use and recovery of waste electrical and electronic equipment through the organisation of collection activities and the use of appropriate planning arrangements.
- Unauthorised disposal of waste electrical and electronic equipment is punishable by law with the appropriate penalties.

The format used for this manual improves use of natural resources reducing the quantity of necessary paper to print this copy.

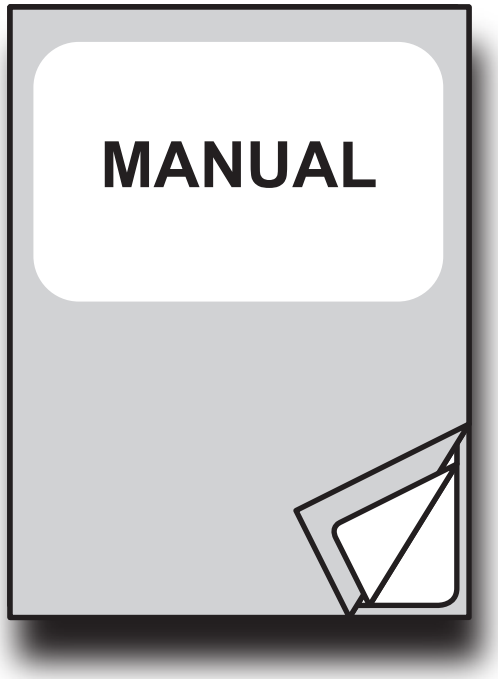
MANUAL

Model: BD099
FCC ID: OAH-4296017
IC: 22762-4296017
CE
CUSTOM
BD099-2
28E.300000000099
X1
U2
5V
3V3
U3
J6
JP1
U1
1710
na
J2
J1

KPM180H_UHF

1. Device
2. Installation instruction guide
3. Paper block guide
4. External low paper sensor with cable
5. Reducer for paper width

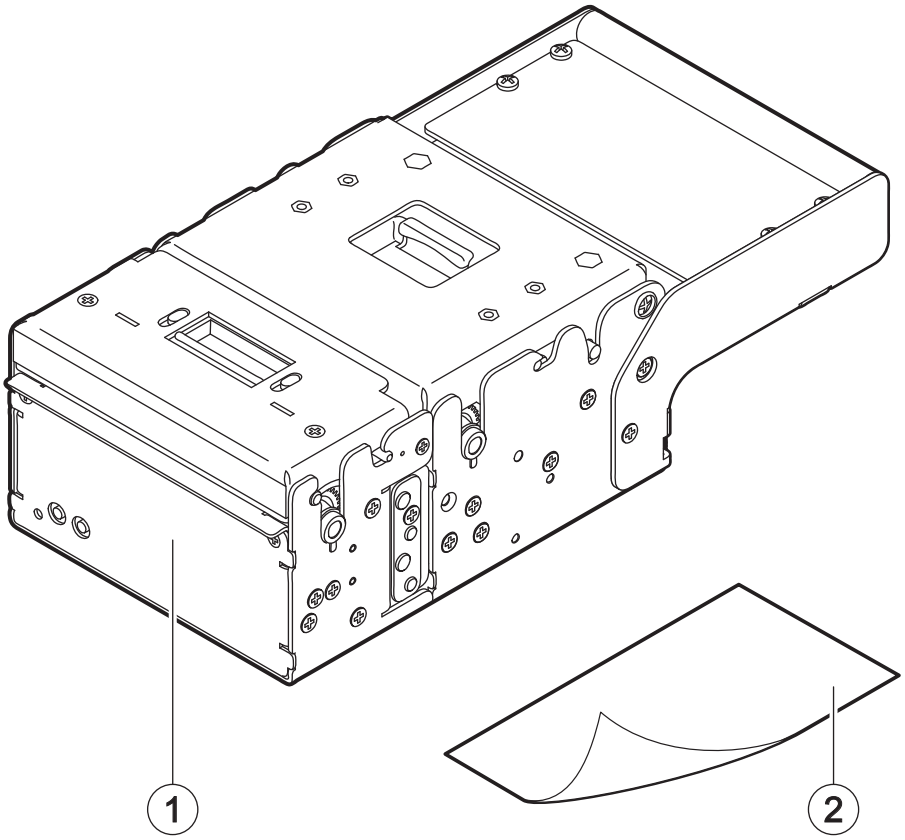

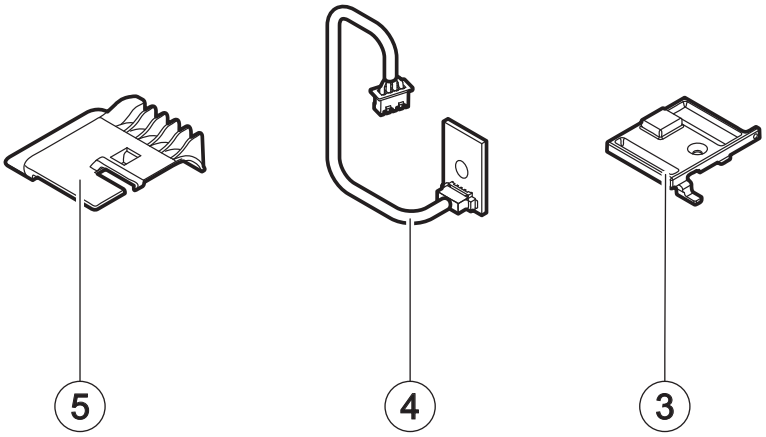

KPM180H_UHF

1. RFID support chassis
2. Device chassis
3. Opening lever for device cover
4. Device cover
5. Opening lever for presenter cover
6. Paper out
7. Status LED
8. LF LINE FEED key
9. FF FORM FEED key
10. Presenter chassis
11. Adjustable cursor for paper in
12. Paper input
13. Keys and connectors panel (see following paragraphs)
14. Product label

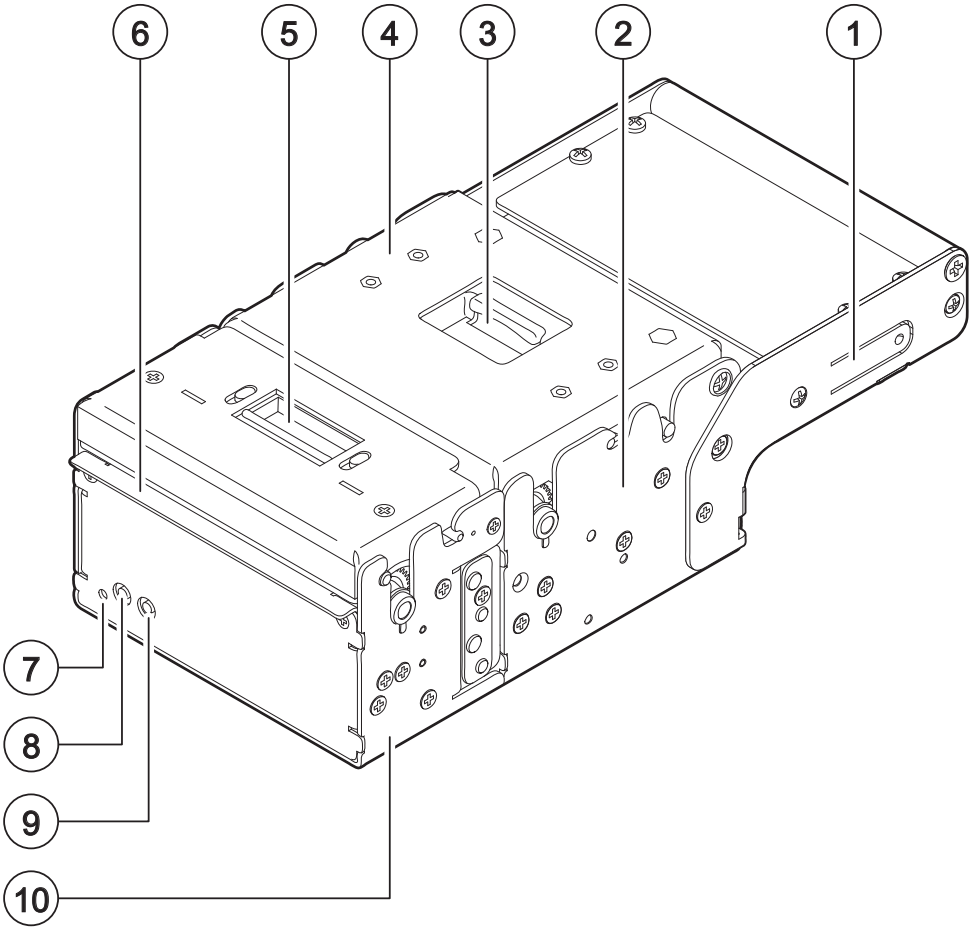

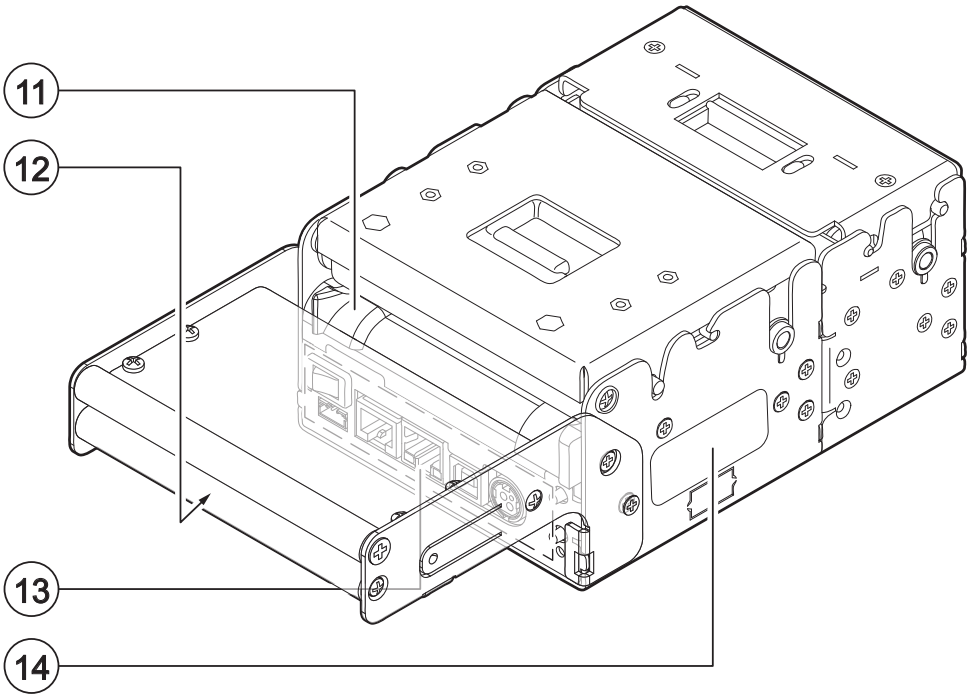

KPM180H STD, KPM180H STD 300, KPM180H PRES, KPM180H PRES UHF, TK180 MET

1. ON/OFF key
2. Connector for low paper sensor (external)
3. RS232 serial port (RJ45)
4. Ethernet port
5. USB port
6. Power supply port
7. Status LED
8. FF FORM FEED key
9. LF LINE FEED key

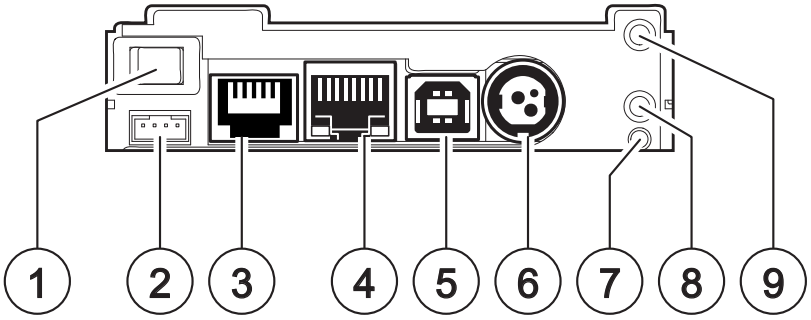

TK180 PLAS

1. Connector for low paper sensor (external)
2. RS232 serial port (RJ45)
3. Ethernet port
4. USB port
5. Power supply port
6. Status LED
7. FF FORM FEED key
8. LF LINE FEED key

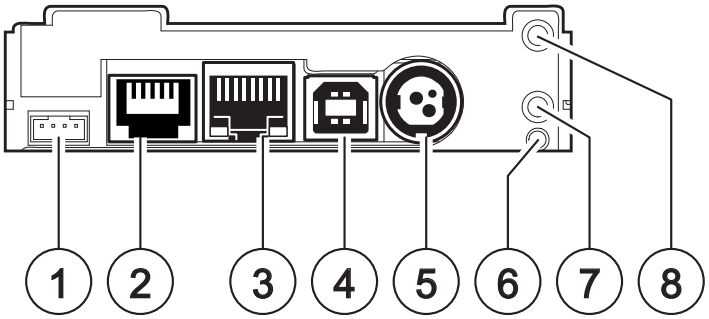

KPM180H PRES UHF

1. RFID reader
2. Printing head with temperature sensor
3. Top mobile sensor for detecting black mark on the thermal side of paper or hole between tickets
4. Bottom mobile sensor for detecting black mark on the thermal side of paper or hole between tickets
5. Sensors for detecting paper in presence
6. Sensor for detecting the opening of device cover
7. Sensor for detecting the opening of presenter cover
8. Sensors for detecting paper out presence

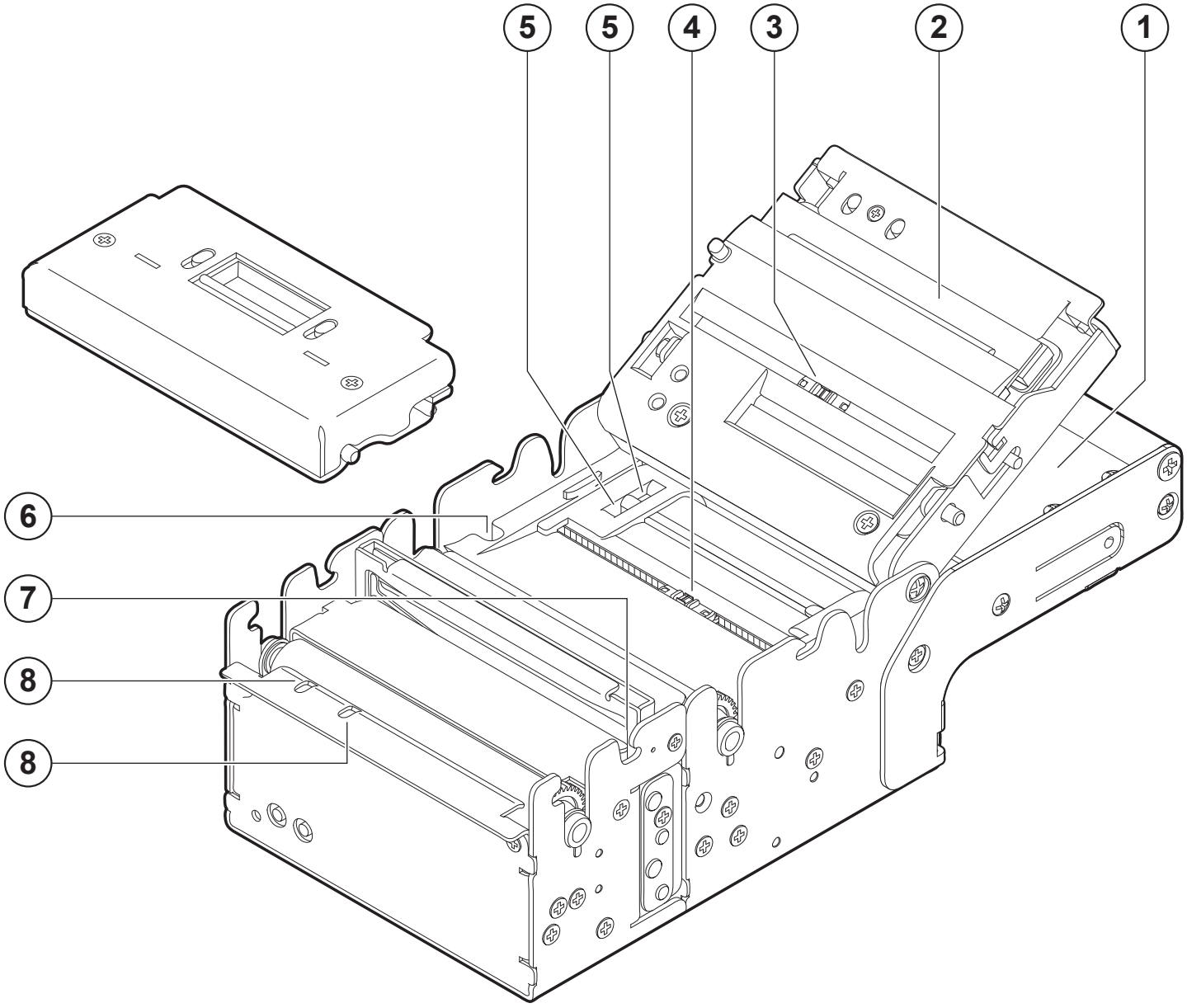

The status LED indicates hardware status of device. Given in the table below are the various LED signals and the corresponding device status.

STATUS LED		DESCRIPTION
-	OFF	DEVICE OFF
GREEN	ON	DEVICE ON: NO ERROR
GREEN COMMUNICATION STATUS	x 1	RECEIVE DATA
	x 2	RECEPTION ERRORS (PARITY, FRAME ERROR, OVERRUN ERROR)
	x 3	COMMAND NOT RECOGNIZED
	x 4	COMMAND RECEPTION TIME OUT
YELLOW RECOVERABLE ERROR	x 2	PRINTHEAD OVERHEATED
	x 3	PAPER END
	x 4	PAPER JAM
	x 5	POWER SUPPLY VOLTAGE INCORRECT
	x 6	COVER OPEN
RED UNRECOVERABLE ERROR	x 3	RAM ERROR

KPM180H PRES UHF

Length	227.5 mm
Height	92 mm
Width	110.2 mm

NOTE: All the dimensions shown in following figures are in millimetres and referred to devices with closed covers.

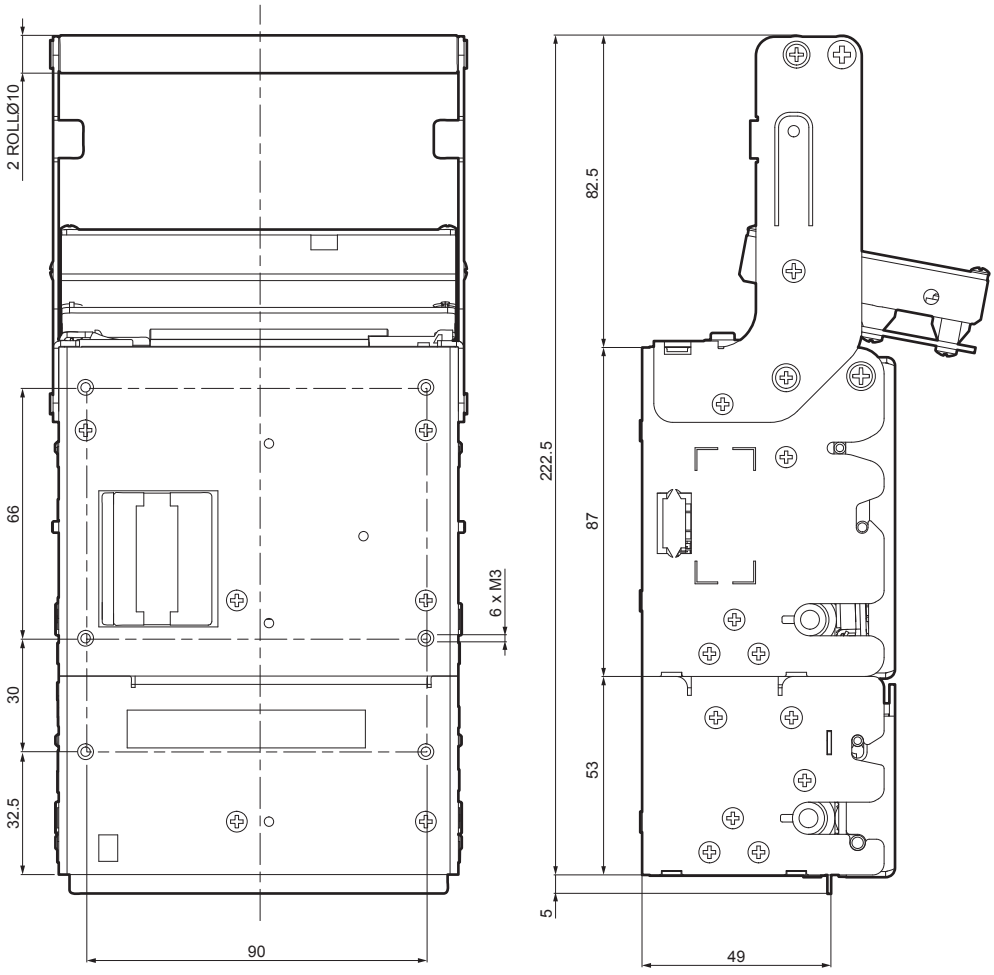

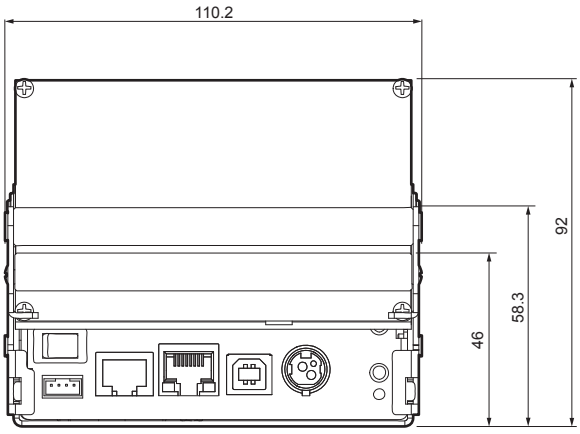

Ticket with RFID tag (models with RFID reader/writer)

RFID (acronym for Radio Frequency IDentification) is a technology to identify automatically items using radio waves; this system is based on wireless data capture from RFID tag using appropriate readers. The RFID tag, or transponder, is made up of :

- the microchip that stores the data (including also a unique serial number written);
- an RFID antenna.

The device models equipped with RFID reader are equipped with an RFID transceiver, provided with antenna, that allows to send and receive RF data to and from the tag. For this application the ticket dimensions are not binding but for good reading is important that the tag inside the ticket, after alignment, intersects the antenna area.

The following figure show the available positions of antenna RFID inside the device

KPM180H PRES UHF

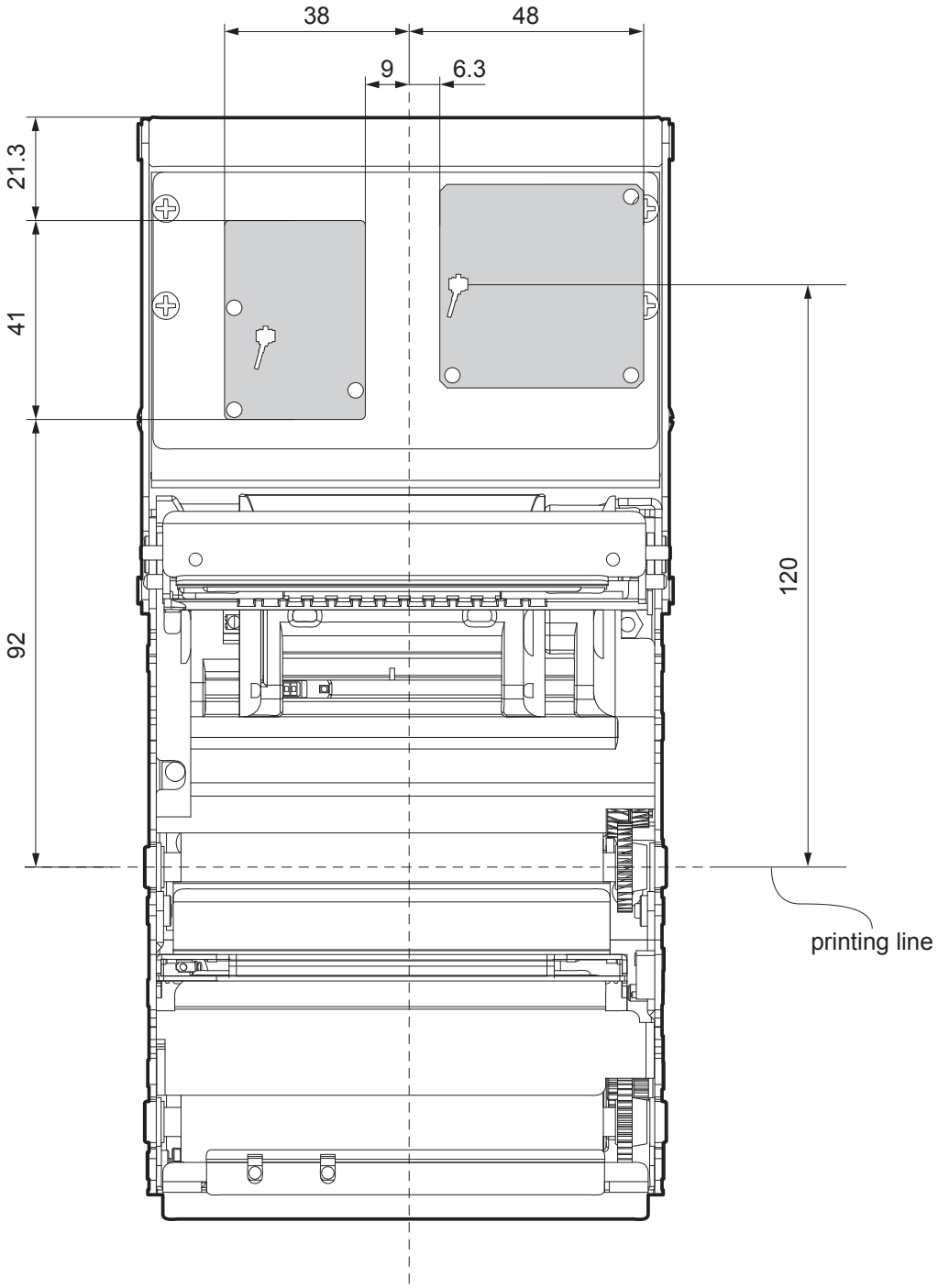

2.2 Device components: external views

1. Printer frame
2. Cutter unit
3. Printer cover
4. Printing head set
5. RFID antenna
6. Paper outfeed
7. LINE FEED key
8. FORM FEED key
9. Status led
10. Lever of paper mouth guide (adjustable)

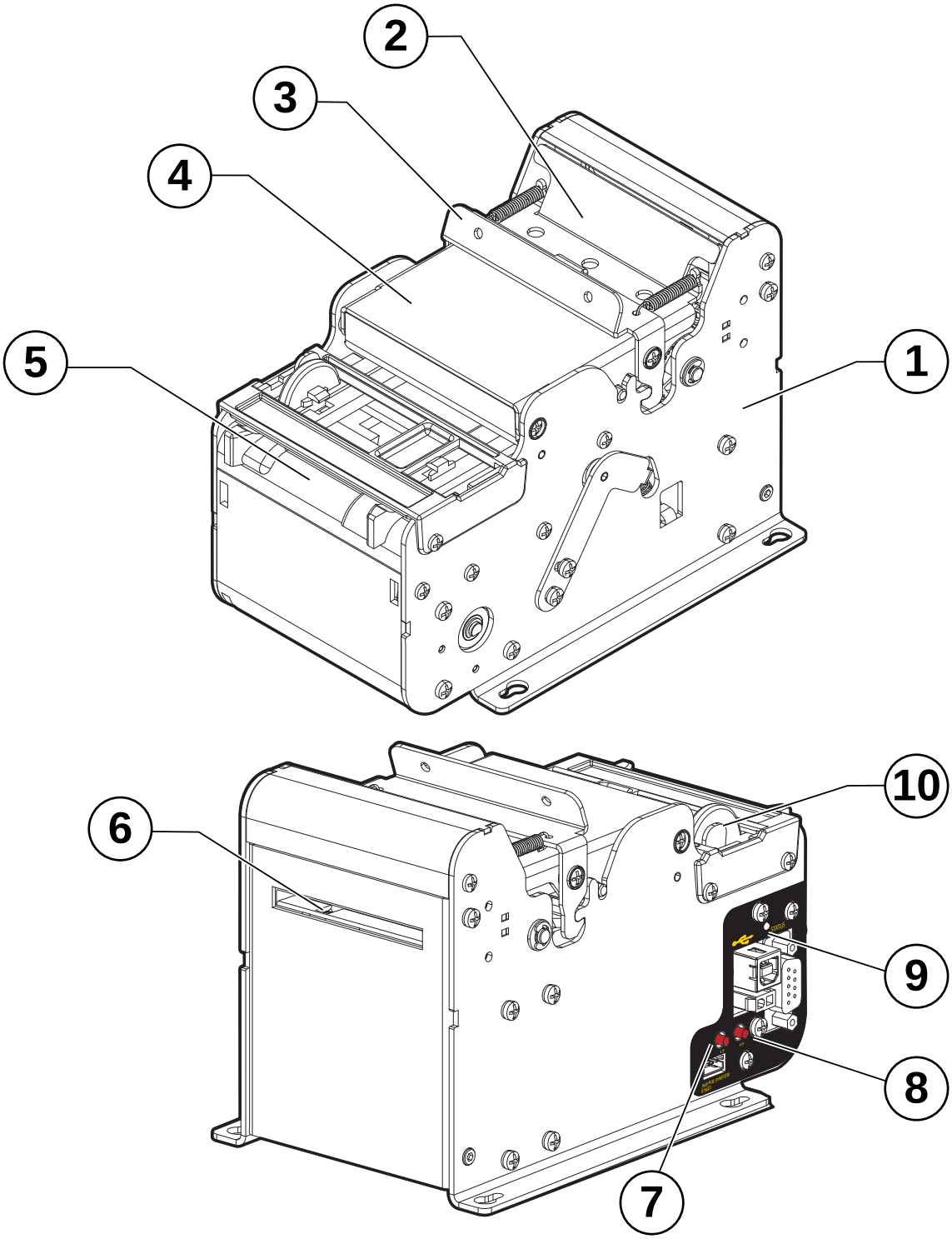

7.11 Specifications for ticket with RFID Tag (for models with RFID reader)

The printer models equiped with RFID reader, manages ticket with RFID Tag. RFID (acronym for Radio Frequency IDentification) is a technology to identify automatically items using radio waves; this system is based on wireless data capture from RFID tag using appropriate readers. The RFID tag, or transponder, is made up of :

- the microchip that stores the data (including also a unique serial number written);
- an RFID antenna.

Under the paper guide an RFID transceiver module is mounted, provided with antenna, that allows to send and receive RF data to and from the tag. For this application the ticket dimensions are not binding but for good reading is important that the tag inside the ticket, after alignment, intersects the antenna area. The following figure shows the antenna's area and its position under the paper guide in the RFID printer model.

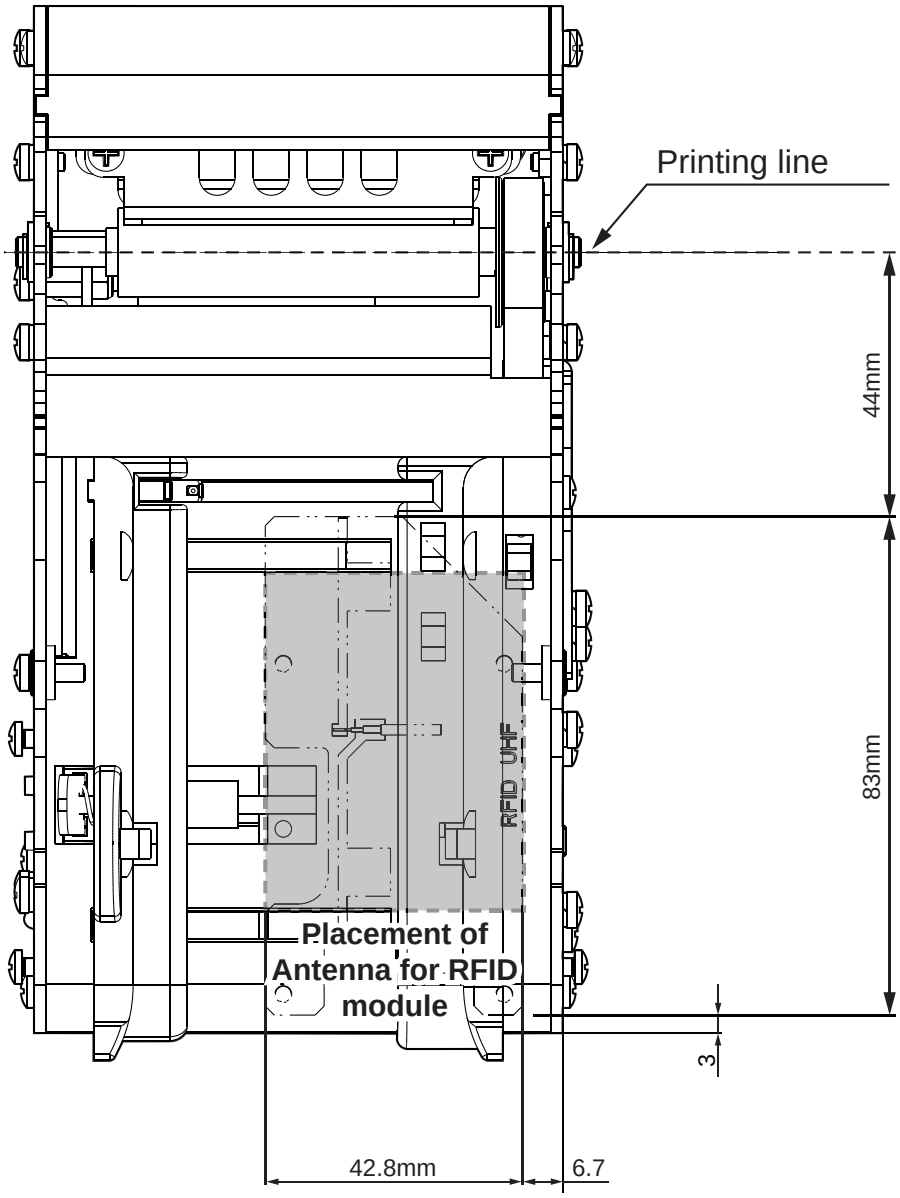

CUSTOM S.p.A.
World Headquarters
Via Berettine, 2/B - 43010 Fontevivo, Parma ITALY
Tel. +39 0521 680111 - Fax +39 0521 610701
info@custom.biz - www.custom.biz

All rights reserved