Wireless Monitoring Solutions for Security and Management

TTMS

Tanker Truck Monitoring System

Installation and Operation

User's Guide

P/N: UM4718

Date: 31-AUG-06

Rev: 1.2

About This Guide

This User Guide provides the information required to install and configure the hardware and software required to run the Fleet application.

Revision History

The revision history for this document is shown in Table 1-1.

Table 1-1: Revision history

Version	Date	Description
1.0	22-MAY-06	Initial
1.1 1.2	9-Aug-06 31-Aug-06	

Warnings and Safety

ATTENTION

- The TTMS system is distributed to a commercial/industrial use only, and should only be handled by personnel authorized by Hi-G-Tek representatives.
- Installation must be performed according to this User Guide.
- **Using only certified antennas:** It is the responsibility of the installer to ensure that when using the outdoor antenna kits in the United States (or where FCC rules apply), only those antennas certified with the product are used. The use of any antenna other than those certified with the product is expressly forbidden in accordance with FCC rules CFR47 part 15.204.

The FCC Wants You to Know

This equipment has been tested and found to comply with the limits for a Class B digital device, pursuant to Part 15 of the FCC rules. These limits are designed to provide reasonable protection against harmful interference in a residential installation. This equipment generates, uses and can radiate radio frequency energy and, if not installed and used in accordance with the instructions, may cause harmful interference to radio communications. However, there is no guarantee that interference will not occur in a particular installation. If this equipment does cause harmful interference to radio or television reception, which can be determined by turning the equipment off and on, the user is encouraged to try to correct the interference by one or more of the following measures:

a) Reorient or relocate the receiving antenna.

b) Increase the separation between the equipment and receiver.

c) Connect the equipment to an outlet on a circuit different from that to which the receiver is connected.

d) Consult the dealer or an experienced radio/TV technician.

FCC Warning

Modifications not expressly approved by the manufacturer could void the user authority to operate the equipment under FCC Rules.

Instructions concerning human exposure to radio frequency electromagnetic fields:

A distance of at least 20cm. between the equipment and all persons should be maintained during the operation of the equipment.

Terminology

Term	Description
Seal	DataSeal, or any other Hi-G-Tek sealing device.
AVL Reader	DataReader which is connected to an AVL device.
HF Reader	A DataReader that uses High Frequency long-range radio frequencies to communicate with the DataSeals.
LF Reader	A DataReader that uses Low Frequency short-range radio frequencies for communication with the DataSeals. For example MicroReader, DataPort, Hand-Held Terminal.
SA Reader	Stand Alone Reader with no direct connection to PC. Such a Reader does have connection to a modem device (i.e. GPRS modem or DataRadio modem) which provides communication to PC.
PC	Personal Computer running the Data Collection program.

Table of Contents

About This Guide ..... **II**

Revision History ..... **II**

Warnings and Safety ..... **III**

Terminology ..... **IV**

Table of Contents ..... **V**

Introduction to the TTMS System **1**

1.1 System Operation 3
1.2 Seals 4
1.2.1.1 Seals for Valves 4
1.2.1.2 Seals for Hatches 4
1.3 TTMS Reader 5
1.3.1 AVL Reader 5
1.3.1.1 AVL Reader Ports and Indicators 6
1.3.1.2 AVL Reader J1/J2 Molex Ports Pinout 8
1.3.1.3 AVL Reader I/O Electrical Characteristics 9
1.3.1.4 AVL Reader Block Diagram 9
1.3.2 AVL Antenna 10
1.3.3 GPS Cellular Module 10
1.3.4 Seal Status Indicator and Protection Box 11
1.3.4.1 Seal Status Indicator 11
1.3.4.2 Protection Box 13
1.4 Setup and Management Software 14
1.4.1 Setup and Analysis SW 14
1.4.2 Management SW Module 14
1.4.3 SAP Driver 14
1.4.4 Hi-G-Tek OCX 14

Initial System Setup **15**

2.1 General 15
2.2 Preliminary Setup 16

2.3 Grouping and Connecting the System Elements 16
2.4 Configuring the Seals 17
2.5 Configuring the Reader and Refineries 21
2.6 Defining the Truck Configuration 22
2.6.1 Configuring Application Parameters 25
2.6.2 Verifying the Seal Status Indicators Operability 26
2.6.3 Verifying Communication between Reader and Seals 27
2.7 Configuring Coordinates of the Authorized Refineries 27
2.8 Fleet Management SW 30
2.8.1 Seal Configuration and Management 31
2.8.2 Reader Configuration and Management 31
2.8.3 Monitoring Events 31
2.8.4 Event Notification Options 31
2.8.5 Report Generation Options 31

Installation 32

3.1 Overview 32
3.1.1 Hardware Installation 32
3.2 Seal Installation 33
3.2.1.1 Filling Hatches Installation 33
3.2.1.2 Draining Valves Installation 34
3.3 Truck Cabin Installation-Preabmle 36
3.4 Truck Cabin Installation 36
3.4.1 Preparing the Cabin 39
3.4.2 Interconnecting the Units 39

Setup and Analysis 39

4.1 Overview 39
4.1.1 Launching the Application 39
4.1.2 Defining Seal Ids 39
4.1.3 Configuring Application Parameters 40
4.1.4 Verifying LED Display 41
4.1.5 Interrogating Seals 42
4.1.6 Configuring Site Coordinates 43
4.2 Fleet Management SW 44
4.2.1 Seal Configuration and Management 44
4.2.2 Reader Configuration and Management 45
4.2.3 Monitoring Events 45

4.2.4 Event Notification Options 45
4.2.5 Report Generation Options 45

Technical Specifications 46

5.1 AVL Reader Technical Specifications 46
5.2 Seal Status Indicator Specifications 48
5.3 Protection Unit 49

1

Introduction to the TTMS System

Hi-G-Tek's **Tanker Truck Monitoring System (TTMS)** secures the tanker fueling hatches and decanting valves and enables continuous real time remote monitoring of the vehicle at all points on the route. Any unauthorized attempts to access the secured hatches or valves are recorded on the seals and invoke real-time, detailed alarms at the Control Center.

The tanker access points are secured with programmed electronic seals. These are monitored by a Reader installed in the truck cabin. The Reader reports, via GPRS or SMS, to the remote control center of any unusual events along with clock and location information acquired through GPS. The control center can also transmit commands or information to the seals via the Reader.

An LED display mounted inside the cabin provides visual indication of the status of each seal, enabling the operator at the refinery to see, at a glance, whether an attempt has been made to tamper with the vehicle hatches or valves – before authorizing the fueling procedure.

System Operation

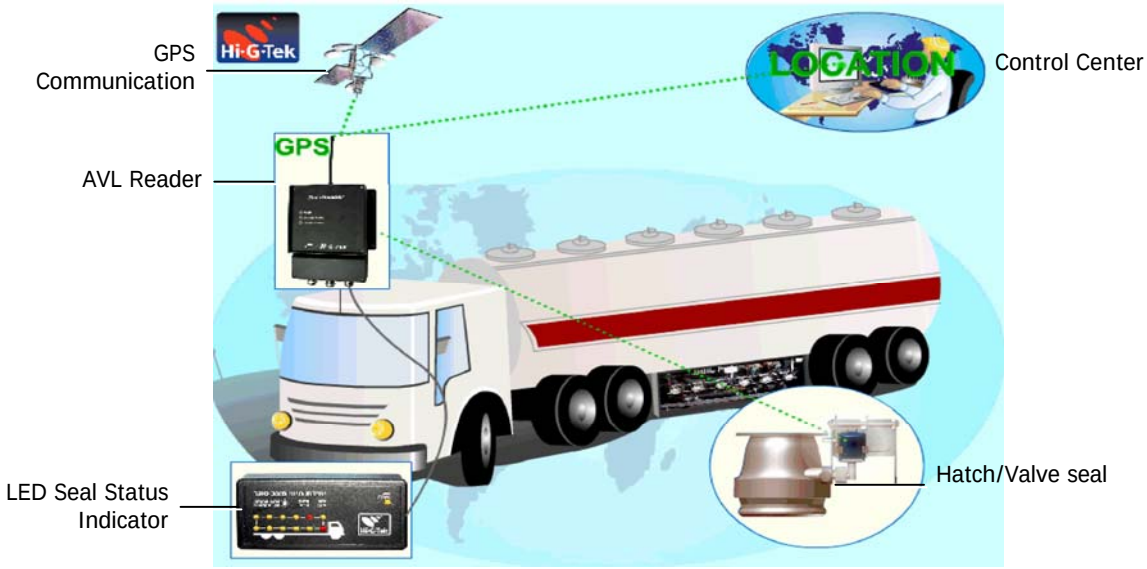

Figure 1-1.

Main features and capabilities

- Real time alerts transmitted to the control center through GPRS (in addition to SMS)
- GPS location tracking and clock
- Remote control and management of the system elements from the control center
- Areas of valid refinery and gas station areas are configured to prevent unauthorized activities outside the defined sites
- System is configurable to support one or two tankers, where configuration can be easily modified
- Independently runs routines to monitor the seals for unusual events defined according to specific scenarios
- Battery backup mode ensures continuous operation and support of the essential features in case the power supply from the vehicle is interrupted
- LED display provides a local visual indication of the status of the seals to the operator or inspector

1.1 System Operation

The **valve** and **cover** of each section are protected by an **electronic seal** with sensors. The seals are monitored by the **Reader** installed in the cabin. The seals record various events (according to the configuration) and transmit notifications such as open/closed to the Reader via HF.

The TTMS Reader forwards the events received from the seals to the **Control Center via cellular**, along with location and time information received via GPS. In the other direction, commands from the Control Center are forwarded by the Reader to the seals.

In addition, the **Seal Status Display** shows, at a glance, a summary of the status of each seal as OK (GREEN) or tampered (RED).

The following figure illustrates communication between the TTMS Reader and the other system elements.

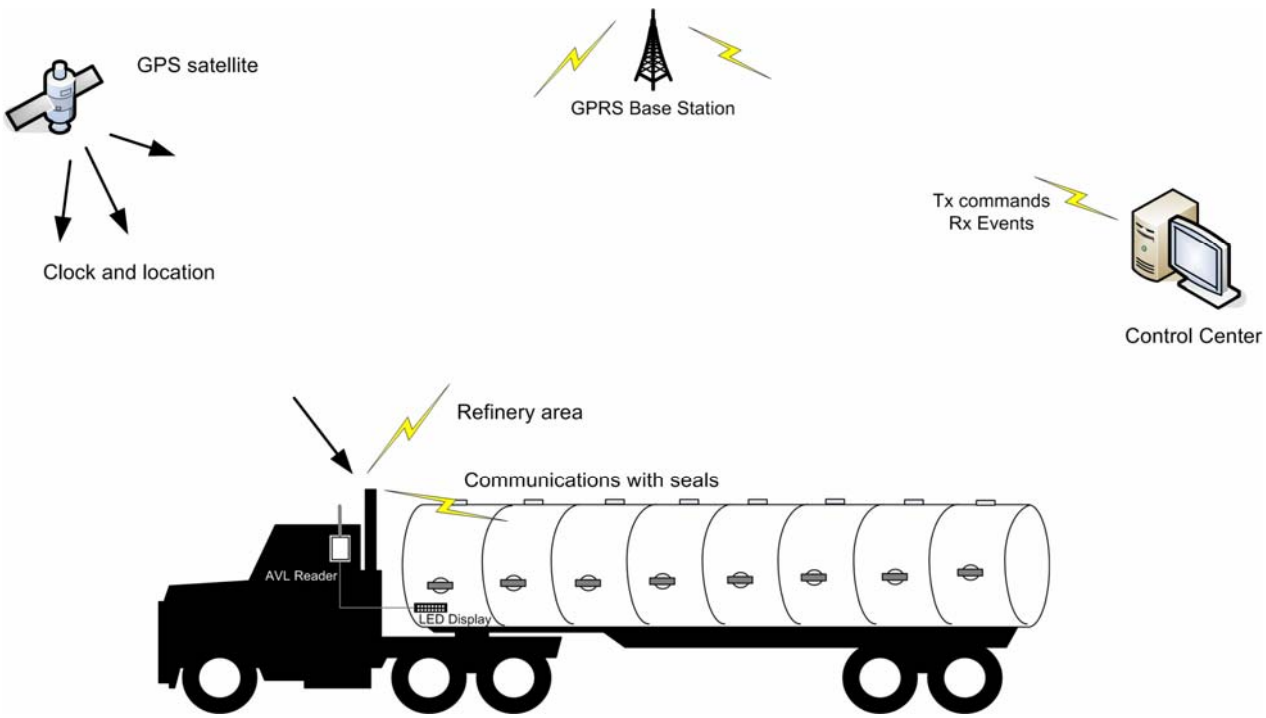

1.2 Seals

UL recognized for Intrinsic Safety - file number: E256795

The seals are portable, reusable electronic devices installed on each hatch and valve. The seals perform the following functions:

- Physically secure the access point (hatch or valve)
- Monitor the access point through sensors and generate status information and alarms corresponding to various programmed conditions
- Store user data for retrieval

Two types of seals are provided in the TTMS: **hatch** seals and **valve** seals. The seals differ in the length of the locking pin and the mounting bracket.

1.2.1.1 Seals for Valves

There are two types of valve seals whose closing mechanism corresponds to different types of valves:

- Valves that close through a circular CCW (up to 270°) turn of the handle
- Valves that close through a perpendicular pull of the handle – north to south

The following figures show seals assembled on valves with a 'pull' closing mechanism

A Single Valve Seal

Row of Valve Seals

1.2.1.2 Seals for Hatches

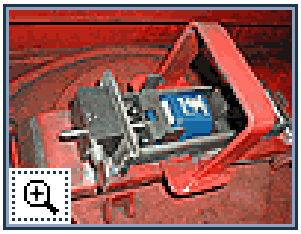
A Single Hatch Seal

Row of Hatch Seals

1.3 TTMS Reader

The TTMS Reader performs the following functions:

- Monitors the seals
- Receives clock and location co-ordinates from GPS
- Transmits seal events to the Control Center, along with GPS coordinates
- Transfers seals status information to the Seal Status Display
- Forwards commands from the Control Center to the seals

The TTMS Reader consists of two interconnected modules installed inside the cabin, and the corresponding antennas:

- **AVL Reader** module and corresponding antenna
- **GPS and Cellular** (i.e. GPRS/GSM) module and corresponding antennas - add on (off the shelf unit (manufactured by STARCOM)

The AVL unit is described in detail in the following sub-section (information on the STARCOM unit is supplied in the corresponding User Manual).

1.3.1 AVL Reader

NOTE: This section provides a general description of the AVL Reader, functions and connections. For a full description of the AVL specifications, refer to 5.1

The **AVL Reader** uses active wireless technology to provide automatic processing and real-time monitoring of cargos during transit. The reader powered from the truck power (24V) is installed inside the truck's cabin, It has read/write capabilities for communicating with the cargo/tank sensors simultaneously in order to verify their presence and status. The reader uses two RF channels (LF, HF) for communication. It is equipped with back-up battery and supports two RS232 channels in addition to one RS485 channel for communicating with other devices of the Tanker Truck Monitoring System (TTMS).

As aforesaid the AVL Reader performs three major functions:

- Communicates (two-way) with and monitors the seals over a HF channel
- Transfers (two-way) information between the seals and the GPS/Cellular modem
- Provides seal status to the Seal Status Display

Communication with the seals

The AVL Reader communicates with the seals via a HF antenna that is installed externally on the cabin roof – on the side of the valves on which seals are installed (usually passenger side). The AVL Reader is powered via the vehicle's battery.

Reader Setup

The AVL Reader is configured via a local connection between the Reader and a computer on which the AVL Reader Config application is installed and launched.

1.3.1.1 AVL Reader Ports and Indicators

The unit interfaces and connections are shown in the following figures:

- One side (Figure 1-2) contains the AVL antenna connections and LED indicators;
- The other side (Figure 1-3) provides the connections required for power, setup and interface to the GPS/Cellular Modem.

The following figure shows the antenna connections and indicators.

Figure 1-2. AVL Reader Antenna Connection Side

AVL Antenna Port Description

Reverse polarity SMA connector (antenna specifications are given in section 1.3.2

LED Indicators

LED	Description
Power	Indicates power status and firmware download status (during firmware upgrade). o Power ON and self-test - color alternates between GREEN and RED for several seconds: GREEN – OK, RED – fault o Firmware download: Blinking during download process
COMM	Communication: • RED – unit is transmitting data • GREEN – unit is receiving data

The following figure shows the AVL Reader Power & COM connector side.

Figure 1-3. AVL Reader Connector Interfaces

AVL Reader Molex Port Functions

The following table provides a description of the AVL ports.

Table 1-1. AVL Reader J1 J2 Port Function Descriptions

Port	Description
J1	10 pin connector. Provides the following functions (see ***Table 1-2*** for pinout): • RS232 connection to cellular modem. • Power: +24V (from truck supply). • One input auxiliary. • One output auxiliary.
J2	12 pin connector. Provides the following functions (see ***Table 1-3*** for pinout): • RS485 communication to Display Unit(s). • Local RS232 Setup and Config connection to PC • Auxiliary connections – three outputs, one input

1.3.1.2 AVL Reader J1/J2 Pinout

Table 1-2. J1 Connector Pinout

Pin	Signal
1	EXT Input
2	NC
3	EXT Output 3
4	-Vin (GND)
5	+Vin (+24VDC)
6	RS232 – TxD J45 to LCU
7	RS232 – RxD J45 to LCU
8	RS232 – COMM J45 to LCU location command unit
9	NC
10	NC

Table 1-3. J2 Connector Pinout

Pin	Signal
1	NC
2	EXT Output 1
3	NC
4	EXT Output 2
5	-Vin (GND)
6	+Vin (+24VDC)
7	RS485 A
8	RS485 B
9	RS485 COMM
10	RS232 – COMM
11	RS232 – TxD
12	RS232 – RxD

1.3.1.3 AVL Reader I/O Electrical Characteristics

The following table provides the characteristics for the External Interrupt and Output.

Table 1-4. AVL Reader I/O Characteristics

I / O Type	Description
External Interrupt Input	Active Low Max input voltage = ±30VDC Max Vi_L = 1VDC
Output	Open collector general purpose output Current must be limited to 20mA typical, 50mA max. Voltage max = 30V Max VOL at 50mA = 1V

1.3.1.4 AVL Reader Block Diagram

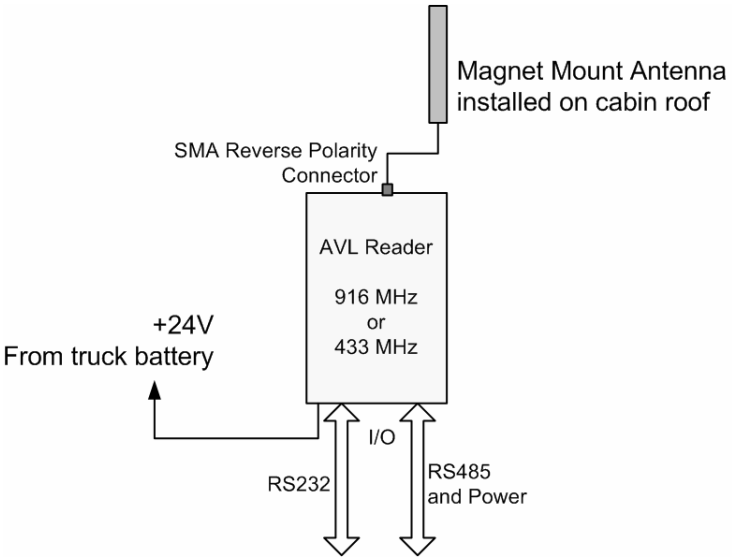

1.3.2 AVL Reader Antenna

A magnet mount type antenna is supplied with the system for use with the AVL Reader.

ATTENTION: Use only the antenna supplied with the system.

Figure 1-4 : AVL Reader- 916.5MHz Antenna (corresponded to reverse polarity SMA connector)

Manufacturer	Panorama Antennas
Type	Magnet Mount Antenna
Model No.	AS-U for 433.92MHz models
	ASF-3061 for 916.5MHz models

1.3.3 GPS Cellular Module

The LCU500 manufactured by STARCOM is an Add on (off the shelf unit) in the TTMS. It integrates a GPS receiver, a cellular network modem (GSM/GPRS/EDGE, CDMA/1X). The system monitors various vehicle sensors, and provides the customer with a vast variety of real-time activities and information about the vehicle.

The AVL Reader communicates with the LCU500 via RS-232 . From the moment the system is set, the electronic sensors and AVL Reader begin to routinely communicate with the driver and control center, reporting any activity involving the hatches, valves as well as the status of the truck, for complete monitoring and security.

The GPS – Cellular Module (GPRS) performs the following functions:

- Continuously receives clock and location updates via GPS
- Transmits data between the AVL Reader and the Control Center, where data transmitted to the Control Center is sent with the clock and location information.

REFER to the CORRESONDING - LCU500 DATA SHEET FOR COMPLETE INFORMATION.

1.3.4 Display Unit and Protection Unit

The **Display unit** is located inside the truck's cabin. It provides the operator a local visual summary of the condition of the seals (tampered or OK). The TTMS system supports two Seal Status Indicator boxes: one for each tank – according to the truck configuration. The Seal Status Indicator interfaces to the TTMS System (specifically to the AVL Reader unit) through a **Protection Box**.

Both units are described in the following sections.

1.3.4.1 Seal Status Indicator

The seal status indicator unit provides status indication of the tamper conditions of all hatches and valve seals. The unit is powered from protection unit (+12VDC regulated). It supports 16 LEDs that corresponding to each hatch or valve sensor of the tanker. Each Seal Status Indicator unit communicates with the AVL Reader over RS-485 serial communication protocol.

NOTE: For trucks supporting two tanks, two units are installed.

Each Seal Status Indicator unit contains two rows of LED displays, corresponding to the hatches and valves and a set of system LEDs providing general status information. The LEDs are lit RED or GREEN according to the status of the seal (Table 1-6).

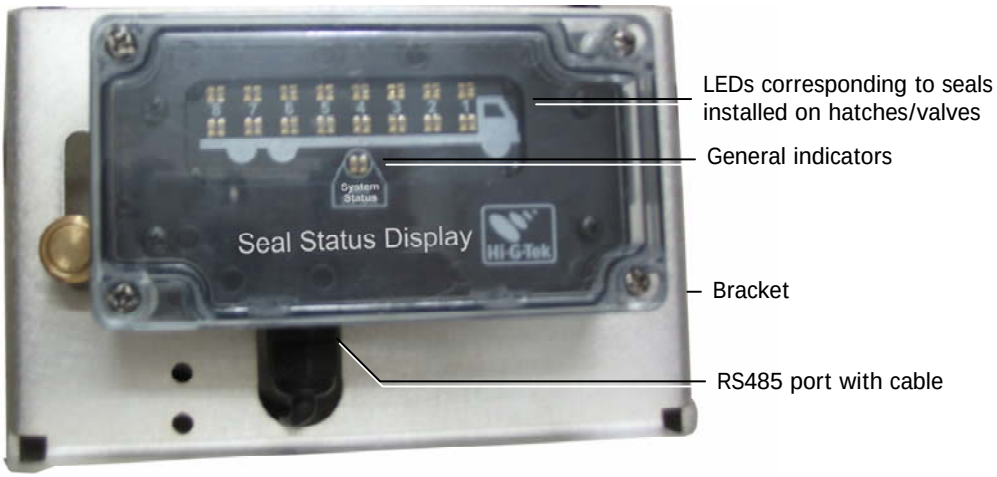

Figure 1-5. Display Unit

Table 1-5. Display Unit Connector

Port	Description
RS485	Connection to Protection Box

Table 1-6. Display Unit LED Status

LEDs	Description
Individual Seal LEDs	GREEN - Seal closed, non-tampered conditions RED Steady - Seal open, tampered condition RED Blinking – Seal not detected by Reader
System Status	RED – general fault indication GREEN – normal operation GREEN Blinking – system initialization in process

Table 1-7. J1 Connector Pinout

Pin	Signal
1	-Vin (GND)
2	RS485 B
3	RS485 COMM
4	RS485 A
5	+Vin (+12VDC)

1.3.4.2 Protection Unit

The Protection unit is located in the truck's cabin. It interfaces between the AVL Reader and the Seal Status Indicator, filtering the AVL Reader signal and splitting it in installations with two Seal Status Indicator units. (The Protection Box is transparent to the system.)

Interface to the AVL Reader and to each of the Seal Status Indicators is provided via RS485 communication. The output interface to the Seal Status Indicators include a +12V regulated power line.

NOTE: The power and RS485 signals are delivered to Display unit via fuses and other protective components in order to provide Over Current and Over Voltage protection.

The Protection Box is shown in the following figure.

Figure 1-6. Protection Unit

*Table 1-8. **J1** Connector Pinout*

Pin	Signal
1	NC
2	RS485 COMM
3	-Vin (GND)
4	RS485 B
5	RS485 A
6	+Vin (+24VDC) EXT Input

*Table 1-9. **J2/J3** Connector Pinout*

Pin	Signal
1	-Vout (GND)
2	RS485 COMM
3	NC
4	+Vout (+12VDC)
5	RS485 B
6	RS485 A

1.4 Setup and Management Software

Hi-G-Tek's system is set up and configured through a local RS232 connection to the AVL Reader from a computer (usually laptop) on which two setup application are installed:

- Seal Config SW – used to configure the group of seals to be installed on the truck
- AVL Config SW – used to configure the Reader and the authorized fueling sites

1.4.1 Setup and Analysis SW

The Setup and Analysis SW is used to configure the TTMS HW elements according to the installation topology, to verify the responses of the devices after the installation and to troubleshoot. The Setup and Analysis SW is an intuitive GUI application installed on a computer (usually a laptop) that is connected to the TTSM Reader (AVL Reader module) through a local (RS232) connection. Management SW Module

The Hi-G-Tek Management SW module provides management and monitoring options specific to the Hi-G-Tek TTMS system elements. It is integrated into the user's management application and is accessed through a dedicated menu option.

2

Initial System Setup

2.1 General

The first phase in the installation consists of verifying that the system elements are operational and performing site configuration procedures such as configuring the system topology, defining authorized refinery zones, etc. The Setup procedure is performed using the Configuration Tool software application.

NOTE: It is recommended to perform the setup phase at the Hi-G-Tek distributor site or office. If the zone definitions (coordinates and area) of the refineries are not available, they may be physically mapped at each refinery according to the instructions in section 2.7.

This chapter provides step-by-step instructions on all the operations required at the initial phase. It includes:

- Interconnecting the TTSM System elements;
- Connecting and launching the Configuration tool;
- Performing the basic setup and configuration procedures;

2.2 Preliminary Setup

The Setup procedure includes the following steps:

1. Grouping the system elements and performing the required interconnections.
2. Configure the seals using the Seal Config Application
3. Defining the Reader and authorized refineries
4. Configuring application parameters
5. Verifying that the LED Seal Status Indicators are operational
6. Interrogating the seals and verifying response
7. Configuring the Readers' site coordinates

The steps above complete the installation procedure.

2.3 Grouping and Connecting the System Elements

Physically group the seals, TTMS Reader elements and LED Seal Status comprising a specific site installation. Interconnect the TTMS Reader Elements and the LED Seal Status according to the following figure.

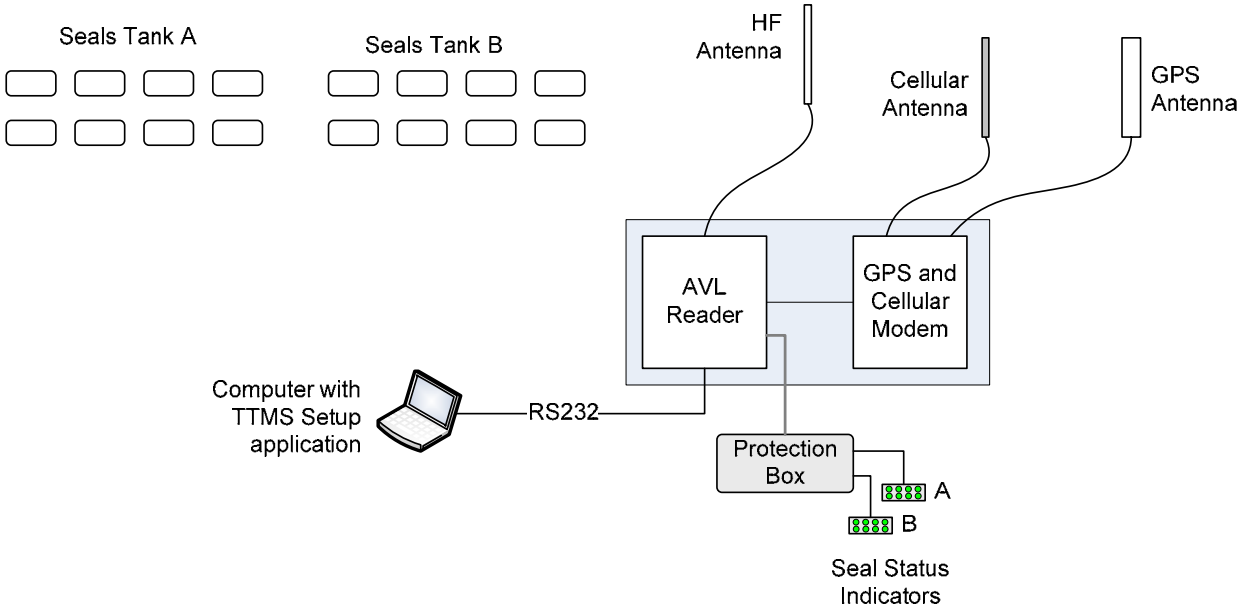

2.4 Configuring the Seals

NOTE: Install the Seal Setup application on the computer from which the system will be configured.

1. Connect a computer running the Seal Setup application to an AVL Reader through an RS232 cable.

   NOTE: This does not necessarily have to be the AVL Reader installed on the truck.

PICTURE OF AVL READER TO COMPUTER CONNECTION

Figure 2-1. RS232 Connection to AVL Reade

2. Launch the application Seal Setup application. The following window appears.

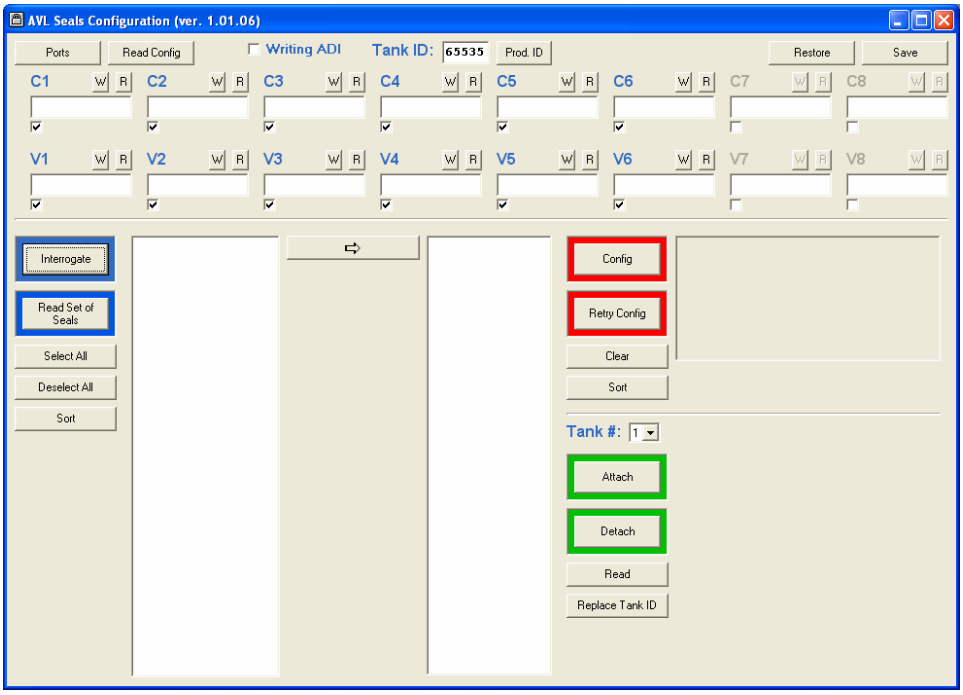

3. Define the communication parameters between the AVL Seal Config application and the AVL Reader as follows:
   - Click the **Ports** button. The following dialog appears.

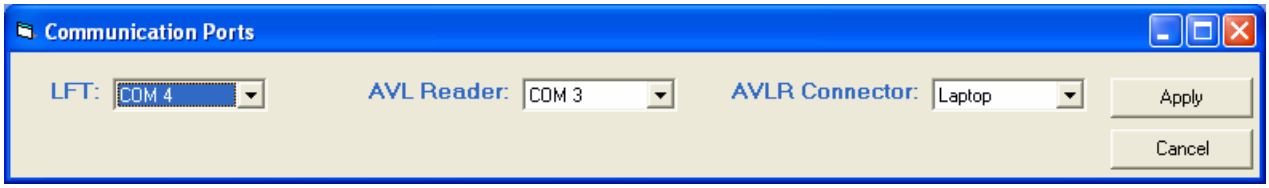

   - In the **AVL Reader** field, select the COMM port corresponding to the computer port to which the AVL Reader is connected.

NOTE: The seals may also be configured using a DataPort. If a DataPort is connected, define the **LFT** field.

   - In the **AVLR Connector** field, select....
   - Click **Apply.** The AVL Seal Config window is invoked.

4. Clear the Screen by clicking the **Clear** button and then checkmark each relevant location (**C1, C2, C3,** etc. for hatches and **V1, V2, V3** for valve).

NOTE: Only the checkmarked location will be available for configuration.

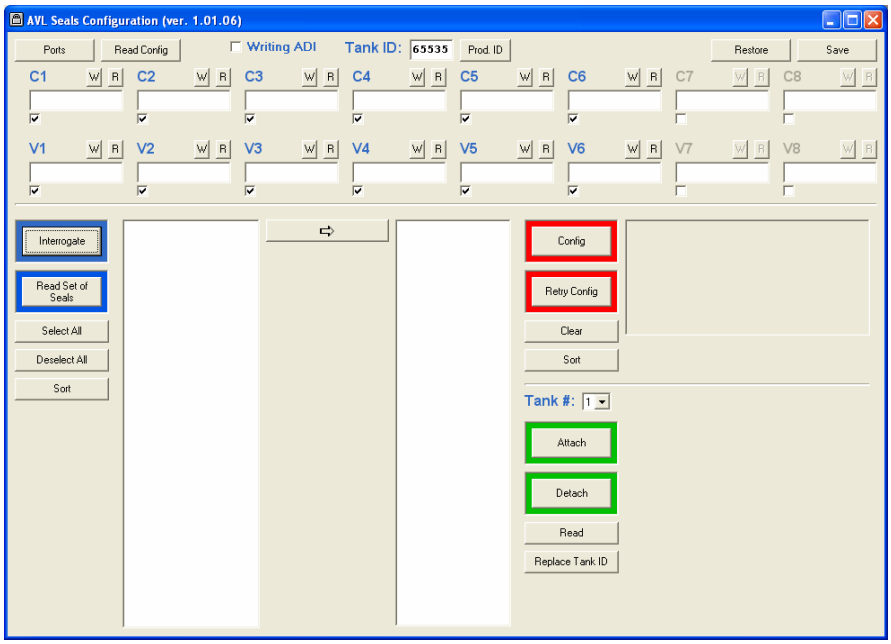

5. Click **Interrogate** to read all the seals in the Reader's zone. The detected seals are displayed in the left column.

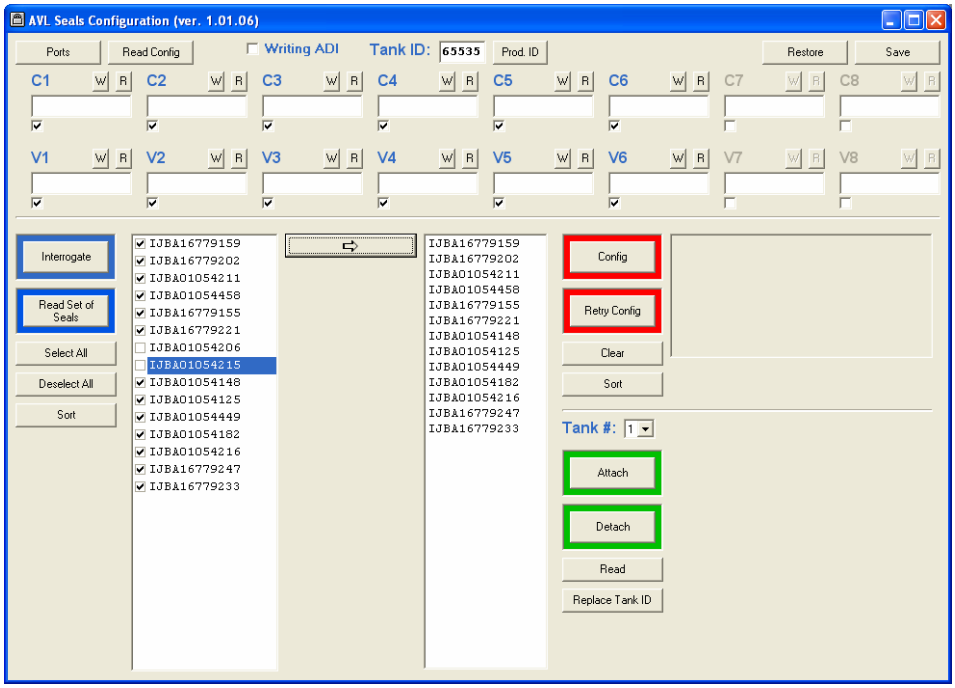

6. Select all the seals that will be installed on the truck (or click **Select All** and deselect the irrelevant seals) and then click the → button. The relevant seals will be displayed in the right column.

Configuring the Seals

7. Click-and-drag each seal to one of the check marked locations corresponding to where that seal will be installed on the truck (section and valve or hatch). Repeat until all seals have been dragged to their destined locations.

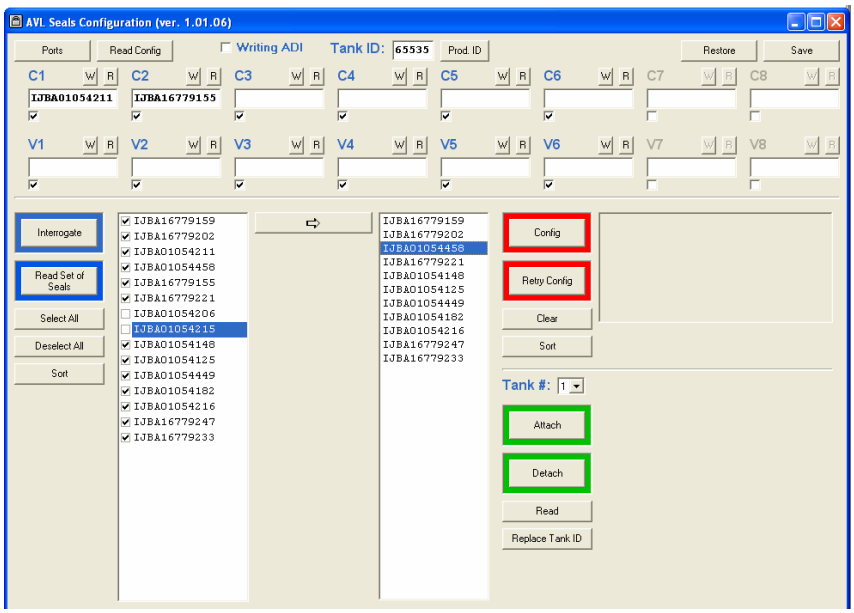

8. Click **Config** to record a map of all seals and their locations, in every seal in the installations. As each seal is written, the corresponding message is displayed in the right window area. If the configuration is successful, the message "**Configuration Completed Successfully**" appears.

NOTE: You may have to repeat the command by clicking **Retry Config.**

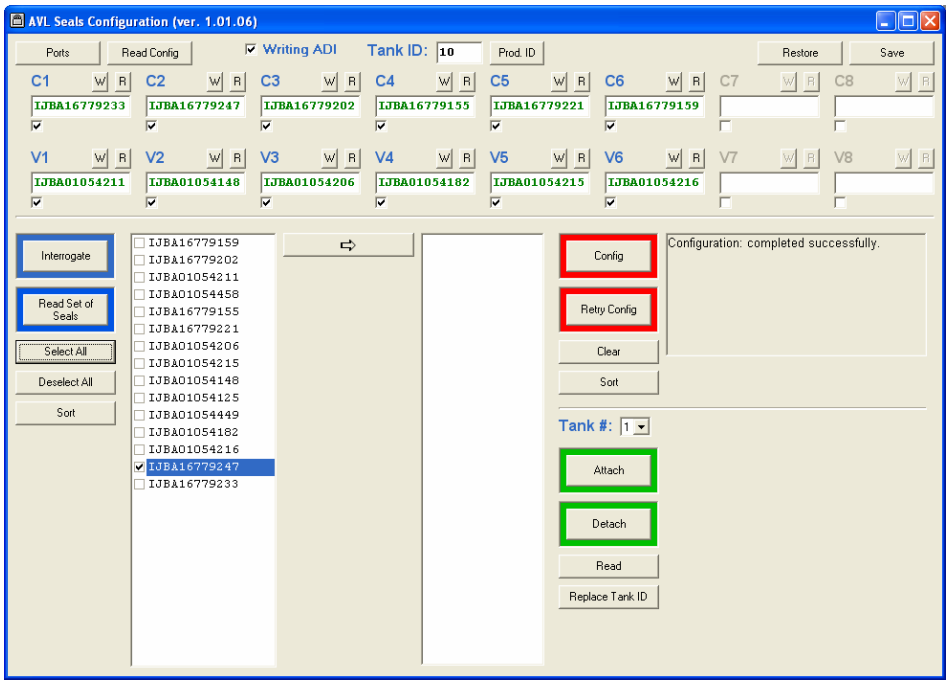

2.5 Configuring the Reader and Refineries

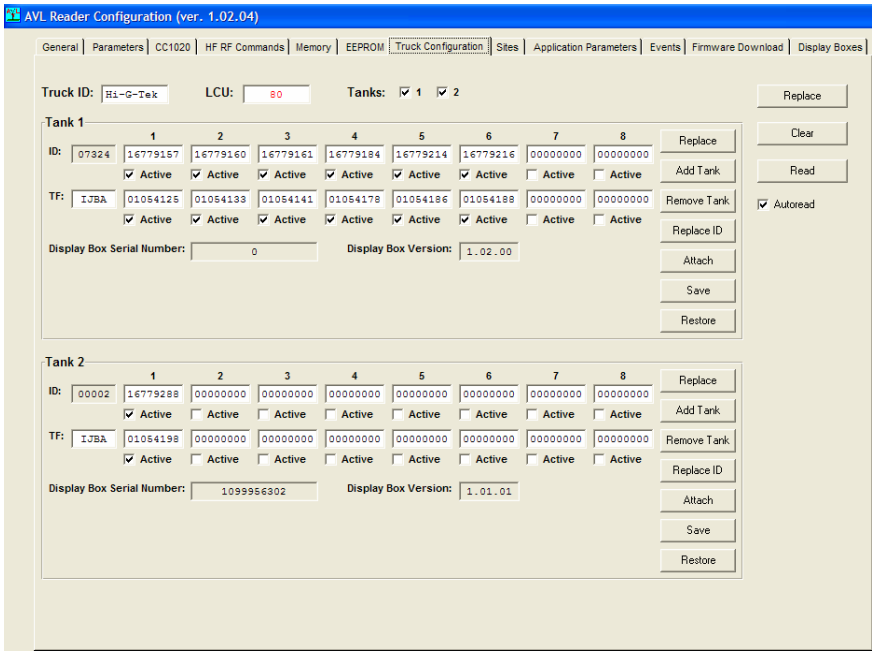

e dialog includes the following tabs:

Tab	Description
General	
Parameters	
CC1020	
HF RF Commands	
Memory	
EEPROM	
Truck Configuration	Required for configuration. Used to configure system elements for a specific truck. See section 2.6
Sites	
Application Parameters	
Events	
Firmware Download	
Display Boxes	

2.6 Defining the Truck Configuration

This tab is used to configure the system elements for a specific tank truck. This includes the following:

- Number of tanks supported by the truck - one or two tanks
- ID of the seals to be installed on each tank – according to their compartment and location
- ID of the AVL Reader and AVL Units
- Seal Status Indicator
- Additional information

This procedure enables the elements to communicate with each other and allows identification at the Control Center.

This tab is also used to update the configuration when changes are made in the system. For example, seals are removed or replaced, tanks are added or removed (to trucks where this is relevant), etc.

To define the truck configuration

1. In the **AVL Configuration** window, click the **Truck Configuration** tab. The following window appears.

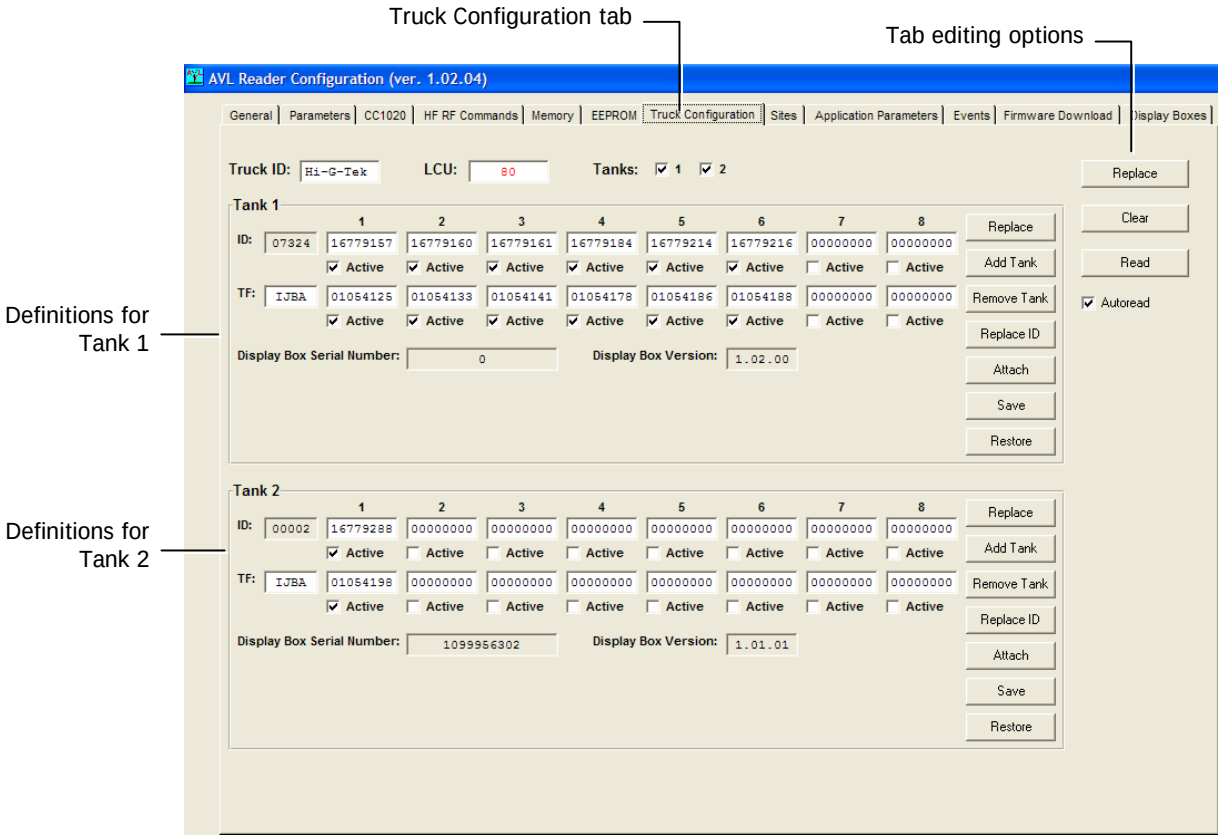

Figure 2-2. Truck Configuration Window

The tab is divided into three main areas:

- General – used to define the general information on the truck
- Tank-1 and Tank-2 areas - each including the corresponding seals and Seal Status Indicator information, configuration and updating options.

2. In the general area, define the following fields:
   - **Truck ID -** enter the truck identification. This is usually the *license plate.*
   - **LCU** – enter the ID on the LCU label (i.e 365 as illustrated below)

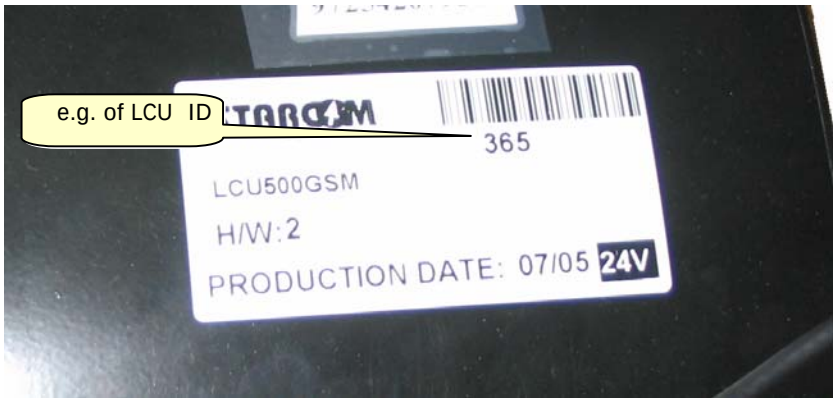

Figure 2-3. Example of LCU Identification Label

   - **Tanks –** check the tanks associated with the current truck (1/2). This will enable either one or both configuration areas.
3. Configure the seal IDs according to their location, for Tank-1 and Tank-2 (if relevant):
   - Verify that the **Active** box is check for every valve and hatch where a seal is installed.
   - Verify that the **Autoread** option is checked. This causes the Reader to periodically read the seal IDs and update the data

NOTE: To read once, disable **Autoread** and click the **Read** button. To **Clear** all the data, click **Clear.**

The following figure shows the General (Truck ID, LCU, etc.) and Tank-1 option. (The options for Tank-2 are identical to those of Tank-1.)

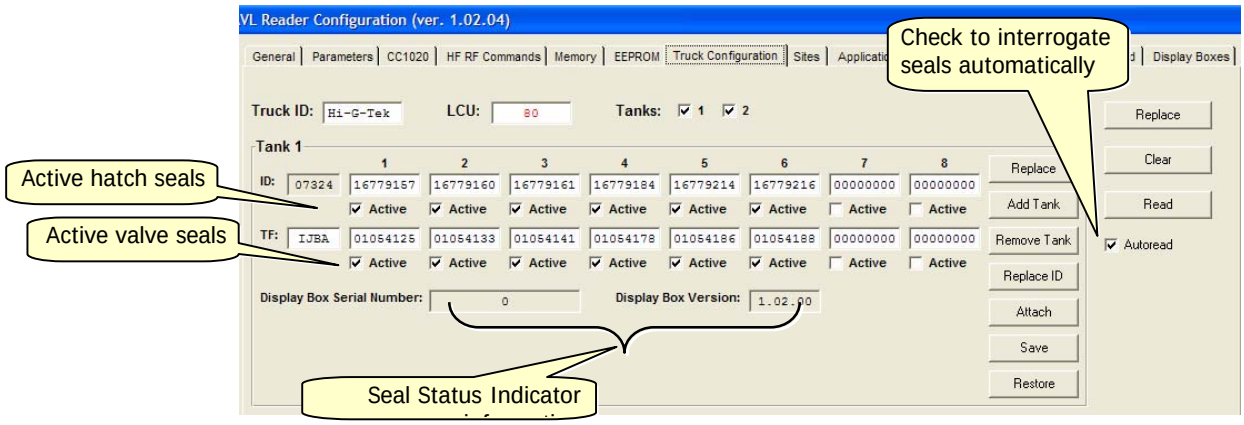

Figure 2-4. Partial Tab Showing Tank-1 and Editing Options

NOTE: The Seal Status Indicator serial number and version are updated automatically upon enabling **Autoread** or clicking **Read**.

4. Click **Replace** to update the Reader with the new information or changes.

5. Click the **Read** button and the Reader ID and the Seal Status Indicator Serial Number will appear in their respective fields.
6. To complete the configuration, click the **Attach** button to transfer all setup information to Reader.

Taking truck (and trailer) out to an uncovered area where GPS access can be tested.

2.6.1 Configuring Application Parameters

1. Click **Application Parameters** tab in menu toolbar. The following window appears.

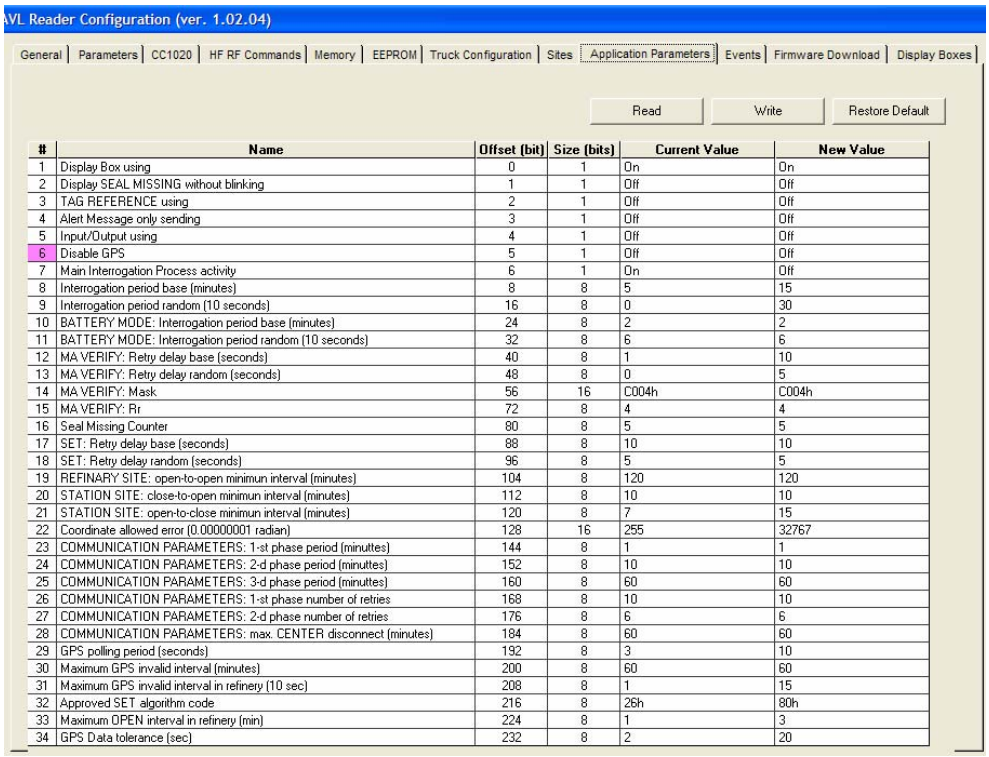

#	Name	Offset (bit)	Size (bits)	Current Value	New Value
1	Display Box using	0	1	On	On
2	Display SEAL MISSING without blinking	1	1	Off	Off
3	TAG REFERENCE using	2	1	Off	Off
4	Alert Message only sending	3	1	Off	Off
5	Input/Output using	4	1	Off	Off
6	Disable GPS	5	1	Off	Off
7	Main Interrogation Process activity	6	1	On	Off
8	Interrogation period base (minutes)	8	8	5	15
9	Interrogation period random (10 seconds)	16	8	0	30
10	BATTERY MODE: Interrogation period base (minutes)	24	8	2	2
11	BATTERY MODE: Interrogation period random (10 seconds)	32	8	6	6
12	MA VERIFY: Retry delay base (seconds)	40	8	1	10
13	MA VERIFY: Retry delay random (seconds)	48	8	0	5
14	MA VERIFY: Mask	56	16	C004h	C004h
15	MA VERIFY: Rr	72	8	4	4
16	Seal Missing Counter	80	8	5	5
17	SET: Retry delay base (seconds)	88	8	10	10
18	SET: Retry delay random (seconds)	96	8	5	5
19	REFINARY SITE: open-to-open minimun interval (minutes)	104	8	120	120
20	STATION SITE: close-to-open minimun interval (minutes)	112	8	10	10
21	STATION SITE: open-to-close minimun interval (minutes)	120	8	7	15
22	Coordinate allowed error (0.00000001 radian)	128	16	255	32767
23	COMMUNICATION PARAMETERS: 1-st phase period (minuttes)	144	8	1	1
24	COMMUNICATION PARAMETERS: 2-d phase period (minuttes)	152	8	10	10
25	COMMUNICATION PARAMETERS: 3-d phase period (minuttes)	160	8	60	60
26	COMMUNICATION PARAMETERS: 1-st phase number of retries	168	8	10	10
27	COMMUNICATION PARAMETERS: 2-d phase number of retries	176	8	6	6
28	COMMUNICATION PARAMETERS: max. CENTER disconnect (minutes)	184	8	60	60
29	GPS polling period (seconds)	192	8	3	10
30	Maximum GPS invalid interval (minutes)	200	8	60	60
31	Maximum GPS invalid interval in refinery (10 sec)	208	8	1	15
32	Approved SET algorithm code	216	8	26h	80h
33	Maximum OPEN interval in refinery (min)	224	8	1	3
34	GPS Data tolerance (sec)	232	8	2	20

Figure 2-5. Application Parameters Tab

2. Adjust the application parameters.

Verify that the AVL unit ID numbers are recorded in the server.

2.6.2 Verifying the Seal Status Indicators Operability

The Seal Status Indicators tab is used to view and test the operability of the Seal Status Indicators. It contains buttons for testing the Seal Status Indicator LEDs by setting them to Green, Red, Off, etc. and shows the status of each LED.

To verify and test Seal Status Indicator operability

1. In the **AVL Configuration** window, click the **Seal Status Indicators** tab. The following window appears.

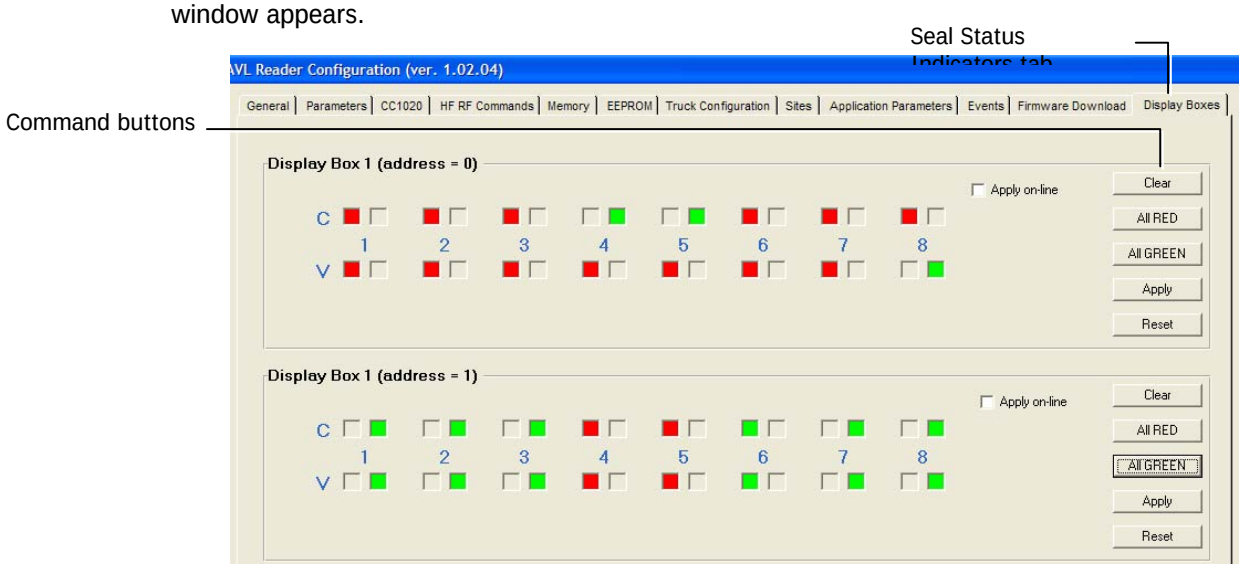

Figure 2-6. Seal Status Indicators Tab

The tab is divided into two areas, one for each Seal Status Indicator. Each area contains LEDs that mirror the status of the corresponding Seal Status Indicator LEDs, and buttons for testing the Seal Status Indicator LED responses.

LED Color Indications:

- Green – seal closed
- Red – seal open
- Off – seal not enabled

2. Begin by verifying that the display is operational for each Seal Status Indicator:
   - Click **All Green** and **Apply.** All the corresponding LEDs should be Green.
   - Click **All Red** and **Apply**. All the corresponding LEDs should be Red.
3. You toggle individual LEDs between Red, Green and flickering by repeatedly clicking on the checkbox of the seal representation.

2.6.3 Verifying Communication between Reader and Seals

The Events tab is used to verify the communication between the Reader and the seals by interrogating the seals, invoking events which are sent from the seal to the Reader and through to the AVL Reader application where they are displayed.

To interrogate the seals

1. Click the **Events** tab from the menu toolbar. The following window appears.

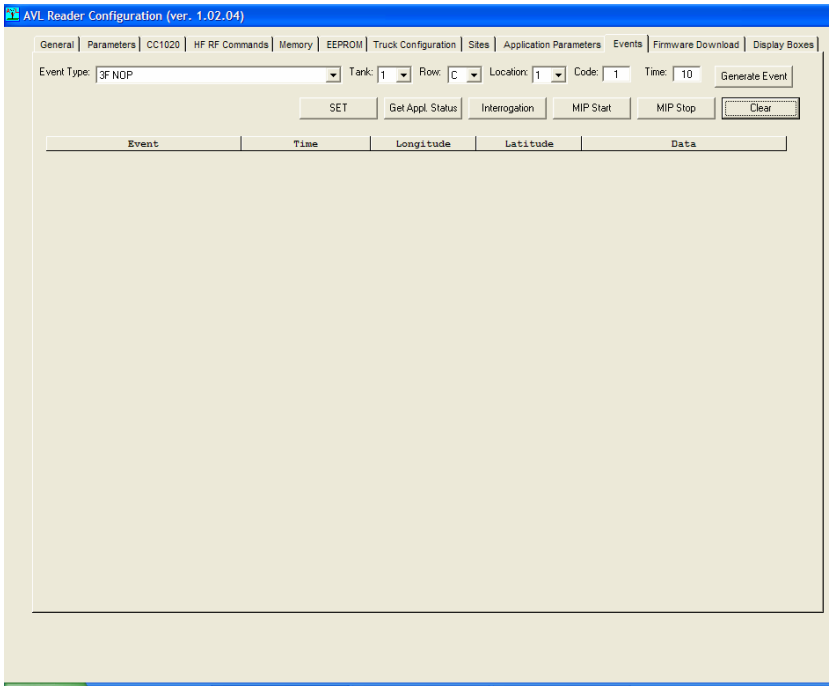

Figure 2-7. Events Tab

2. Click the **MIP Start** button. A list of allocated seals, identified by the Reader, is shown.
3. Click **Interrogation** button to execute command and verify that all 'attach' commands are OK.

NOTE: If there is no response, perform another interrogation.

4. Click **Get Application Status** and view response prompt – GPS OK, battery, etc.

2.7 Configuring Coordinates of the Authorized Refineries

Configure the coordinates of every **refinery** site where the tanker truck, on which this system will be installed, will be authorized to fill up. Seals can only be armed (SET command) at these locations.

Configuring Coordinates of the Authorized Refineries

The coordinates must be configured along with the radius of each refinery where the truck may stop. The coordinates are configured according to the following criteria:

- The radius is square shaped
- Minimum radius – 30 meters
- Allowed GPS deviation – approximately 2 meters
- The number of filling stations at the refinery
- The distance of the filling stations from the edge of the refinery or the road

NOTE: One method of taking measurements is sending a tanker truck on which the seals are installed, opening and closing the seals at each refinery location and analyzing the events indicating the location at the Control Center. If this method is used, it is recommended to perform the procedures at each refinery a number of times and take an average of the exact location.

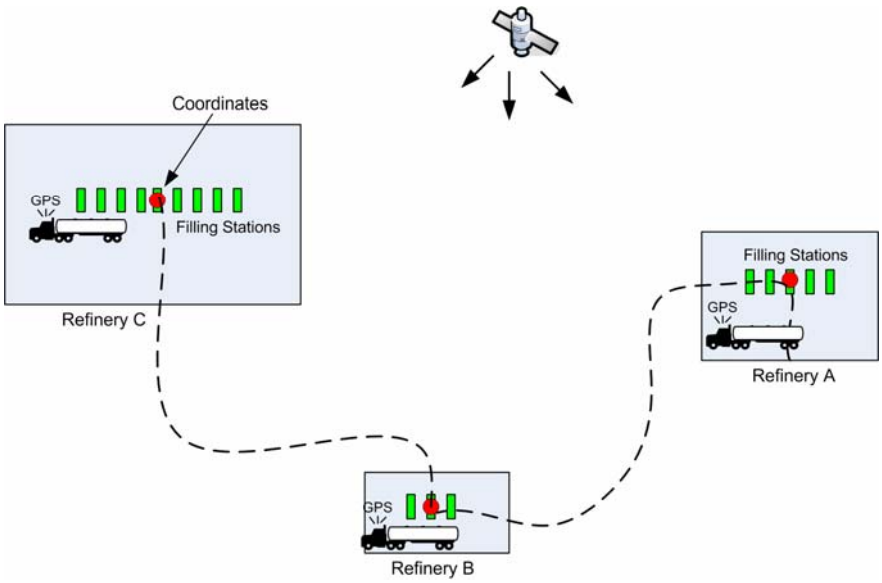

Figure 2-8.

To define the coordinates

1. In the AVL Reader Configuration window, click the **Sites** tab. The following window appears.

Configuring Coordinates of the Authorized Refineries

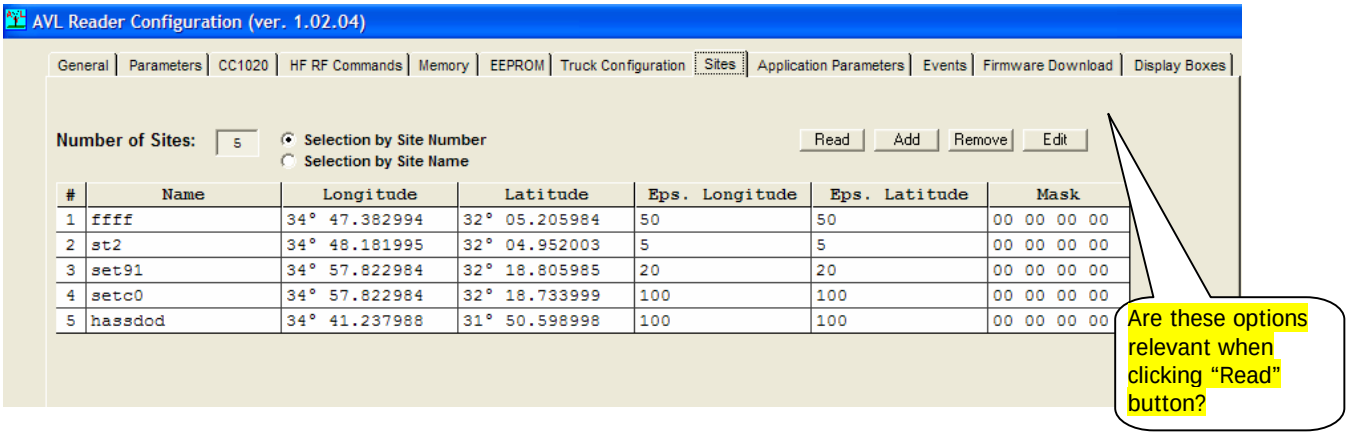

#	Name	Longitude	Latitude	Eps. Longitude	Eps. Latitude	Mask
1	ffff	34° 47.382994	32° 05.205984	50	50	00 00 00 00
2	st2	34° 48.181995	32° 04.952003	5	5	00 00 00 00
3	set91	34° 57.822984	32° 18.805985	20	20	00 00 00 00
4	setc0	34° 57.822984	32° 18.733999	100	100	00 00 00 00
5	hassdod	34° 41.237988	31° 50.598998	100	100	00 00 00 00

Figure 2-9. Sites Tab

2. Click **Add** and define the coordinates of each site (row) as follows:
   - Enter the site **Name.**
   - Enter the **Longitude** coordinates.
   - Enter the **Latitude** coordinates.
   - Eps. Longitude
   - Eps. Latitude
   - Mask

2.8 Fleet Management SW

- Verify (using the Fleet Management SW) that the command (**Get Status)** of the unit invokes the appropriate response. (i.e. location). If OK, means there is com with the server in both directions.
- Make sure all seals are closed. And then perform SET.
- Verify that all LEDs are green.
- Open each of the seals, hatches and valves. Verify that the correct status is received at the fleet application.

2.8.1 Seal Configuration and Management

- Defining seal parameter thresholds
- Writing and reading seal's electronic manifest such as cargo type, source, destination, etc.
- Viewing seal status
- Viewing events stored on seals
- Sending commands to seals – Set, Read Events, etc.

2.8.2 Reader Configuration and Management

- Configuring Readers to forward interrogation (Verify) responses and seal initiated events (Bursts) from specific seals in order to optimize operation
- Configuring Verify command (interrogation) parameters per Reader to optimize operation in specific zones

2.8.3 Monitoring Events

- Burst and Verify events
- Real-time display of seal events such as opening of locks, tampering, motion, etc.
- Each event is displayed with detailed information fields such as event source, generation time, Reader ID, etc.
- Filtering displayed information according to user defined criteria

2.8.4 Event Notification Options

Users can be notified of events through a variety of methods:

- SMS, E-mail and Voice messages to defined destinations
- Sound or visual on-screen alarms

2.8.5 Report Generation Options

Users can generate reports based on received events by filtering the received events according to various user defined criteria such as date, event type, source, Reader ID, etc.

The selected events can then be saved as a *.TXT file.

3

Installation

ATTENTION: Installation should be performed by authorized personnel and according to the necessary safety precautions.

3.1 Overview

1. If the system was not checked on site, verify that the elements are operational by following the procedures described in section TBD.
2. Install the seals on the hatches and valves.
3. Verify the operation of each seal – after the installation.
4. Fill the installation form with the serial number of every element in the system.
5. Install the cabin elements.
6. Check the installation again.

3.1.1 Hardware Installation

The hardware installation consists of the following main phases:

1. Seal installation: upper filling hatches and lower draining valves

1. Verifying responses of all seals.
2. Planning the location of the communication units (Reader, LCU 500, antennas, etc.), in the truck cabin.
3. Seal Status Indicator placement.
4. Layout and routing of cables.

5. For fiberglass cabins only – installation of metal bracket for antenna
6. Placement of AVL Reader, LCU 500, Protection Unit and cable connections
7. Verifying system installation

3.2 Seal Installation

3.2.1.1 Filling Hatches Installation

1. Remove all previous installations (handles, chains, etc.)
2. Place the Locking unit and the seal housing on the two opening plates so that the locking unit is located on the upper plate and the installation tool - while still in the seal housing - is located on the lower plate.
3. Move the Locking unit knob towards the installation tool (refer to Figure 3-1).

NOTE: Make sure the installation tool is touching the side of the upper plate and is adjacent to it

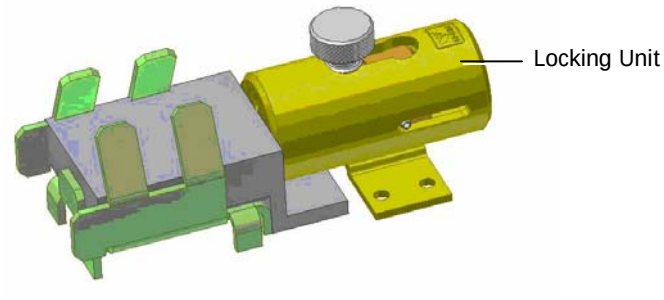

Figure 3-1. Locking and Seal Housing Units

4. Weld small footholds to the locking unit and the seal housing without damaging the installation tool.
5. Remove the installation tool and weld the locking unit and the seal housing.
6. After the units cool off, use the micro-reader to verify that the seal is functional; temporarily install the seal as illustrated in Figure 3-2 and perform a reading.

NOTE: The LED should be green when the locking unit is closed, and red when it is opened.

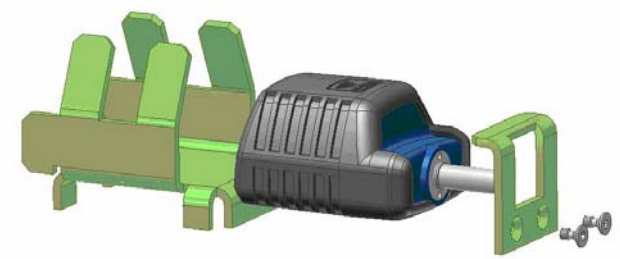

Figure 3-2. Temporary Installed Seal

7. Remove the seal until the installation is complete.
8. Weld a handle to the upper opening plate in a manner that will not hamper the functionality of the locking unit.
9. Paint the welded areas with appropriate paint.
10. Install the seal inside the seal-housing, fasten the screws, and secure the screw with appropriate thread locking adhesive (refer to Figure 3-2).

The following figure shows an example of a completed hatch installation.

Figure 3-3. Example of Completed Hatch Installation

3.2.1.2 Draining Valves Installation

1. All devices which were used to lock the handle of the draining valves should be removed.
2. Fasten the device to its location by welding its backside (refer to Figure 3-4).

NOTE: The location of the device should not constrain the movement of the handle and should allow the pin of the seal to go through the hole in the handle. If needed, add rulers to which the device could be fastened.

Seal Installation

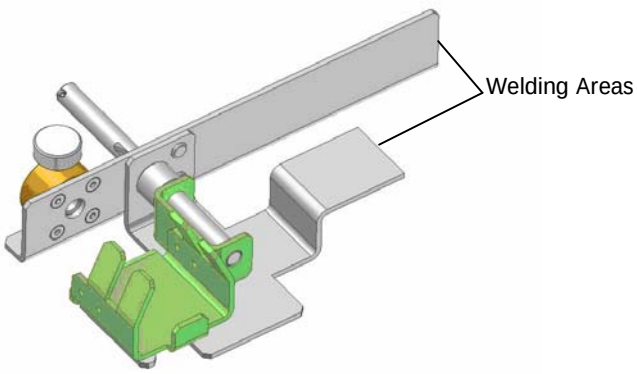

Figure 3-4. Draining Valve Locking Unit

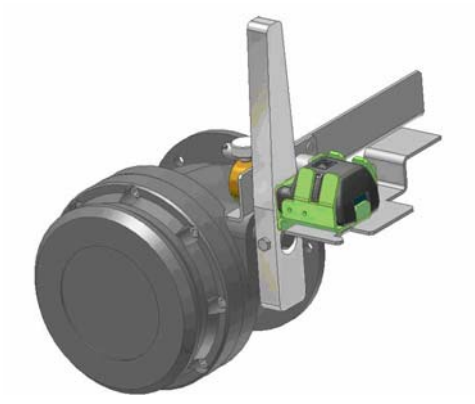

Figure 3-5. Valve and Locking Unit

3. Install the seal inside the seal-housing, fasten the screws, and secure the screw with appropriate thread locking adhesive (refer to Figure 3-6).

Figure 3-6. Installing the seal inside the housing

4. Paint the welded areas with appropriate paint.

3.3 Preface -Truck cabin Installation .

NOTE: Installation should be performed by a certified car electrician and according to all applicable standards.

3.3.1 Preparing the Cabin

Begin by unscrewing the dashboard covers on the passenger half and laying it bare in order to locate the place in the dashboard that contains the least number of wires and connections. This is usually on the side of the passenger, since on the driver's side, all the clocks and sensors are located.

3.3.2 Interconnecting the Units

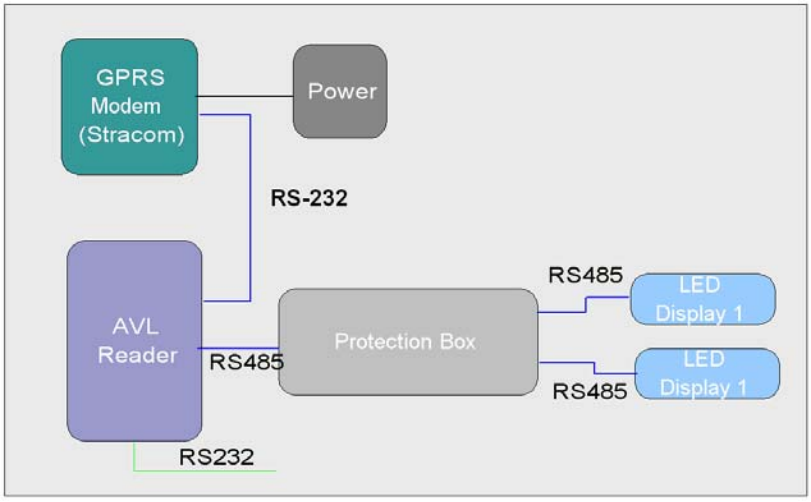

Figure 3-7. TTMS Architecture

3.4 Truck Cabin Installation

The installation procedure in the cabin consists installing the electronic units: AVL Reader, AVL Unit (GPRS Modem), and external antenna with a magnetic base (connected to the AVL Reader), GSM Antenna, Protection unit and LED Display unit.

1. Open the Dashboard.
2. Place and install AVL Reader and Protection unit in upper front storage compartment (dashboard).

NOTE: The AVL Reader unit are fed from the vehicle supply. The supply should be connected through a 2A fuse before the ignition switch**; Use only provided Fuse + Fuseholder** !

3. Power & Grounding connections:
   - Connect the power lines (J1) via the in-line fuse (2A) to the vehicle supply (24VDC).
   - Connect between AVL reader- J2/12pin and Protection Unit- J1
   - Ground the Protection unit (from its grounding wire only) to vehicle chassis.
   - Ground the AVL Reader (from its grounding stud only) to vehicle chassis.

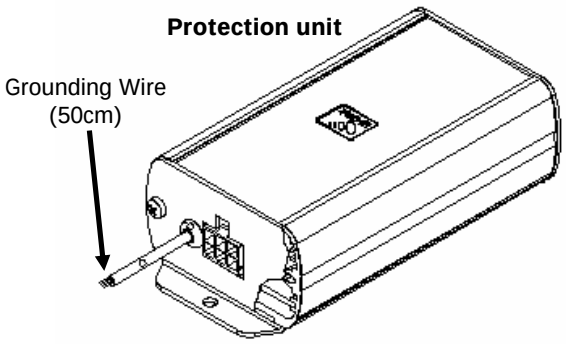

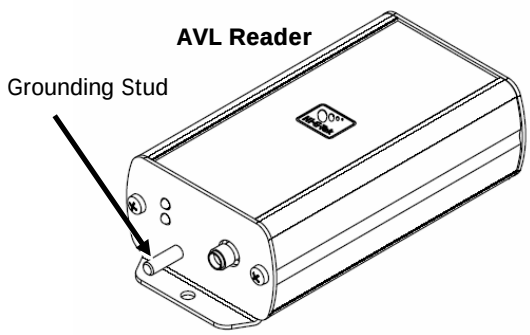

4. Install the GPS – Cellular Module (LCU500) on the dashboard next to the windshield.
   - Connect communication cable between AVL reader- J1/10pin and LCU500- RJ/middle connector(as shown below)
   - Connect the GSM antenna (either on the dashboard or on the side window)
   - Connect the cable power (J12) to vehicle supply (24VDC)

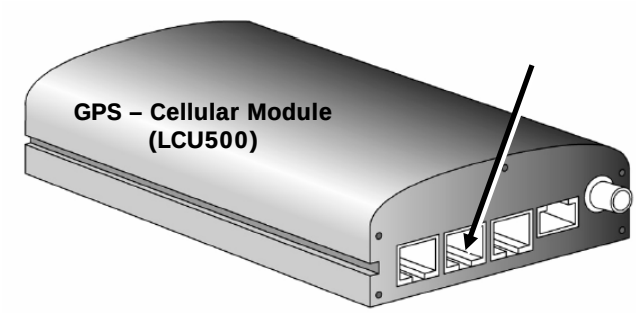

5. Position the AVL Reader external antenna as close as possible to the center of the cabin's roof and route the antenna cable toward AVL Reader.

6. Install the Seal Status Indicator at the side of the passenger's seat. Route the display cable from the Seal Status Indicator toward the protection unit –J2/6pin in dashboard .

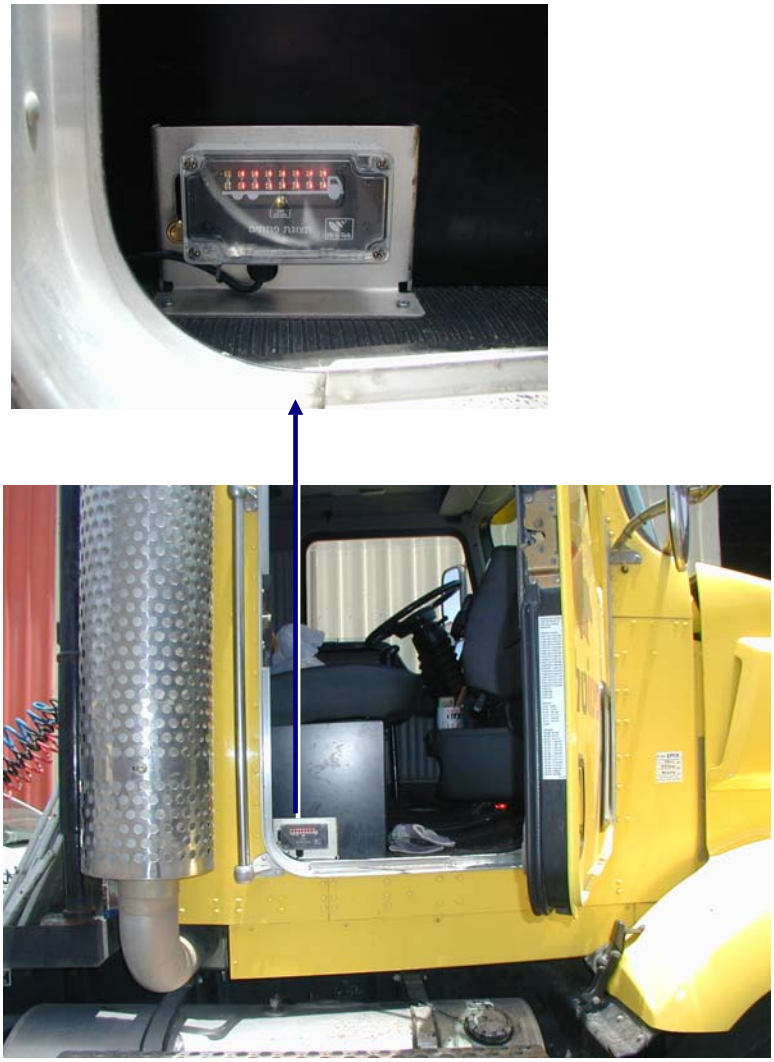

7. Setup + Testing (application)

4

Setup and Analysis

4.1 Overview

The Setup and Analysis SW tool is used for commissioning the TTMS system and verifying that the system units have been installed correctly. The Setup procedure includes the following steps:

1. Launch the application and connect the RS232 cable to the AVL Reader.
2. Defining the tank seal IDs of the truck
3. Configuring application parameters
4. Verifying that the LED Seal Status Indicators are operational
5. Interrogating the seals and verifying response
6. Configuring the Readers' site coordinates

The steps above complete the installation procedure.

4.1.1 Launching the Application

- Connect computer to AVL Reader through an RS232 cable.
- Launch the Setup application

4.1.2 Defining Seal Ids

The seals securing the tanker hatches and valves must be defined.

To define seal IDs

1. Click the Truck Configuration tab from the menu toolbar. The following window appears.

   LCU = identification of STARCOM ID No. label

ID 07324 = Tank ID (use Replace ID to change)

Enter each seal ID where TF: are the common first letters of all seals and the rest are the individual numbers. Seal Status Indicator serial number and version are read.

If changes are made, click Replace to update reader with new info.

Add tank – if

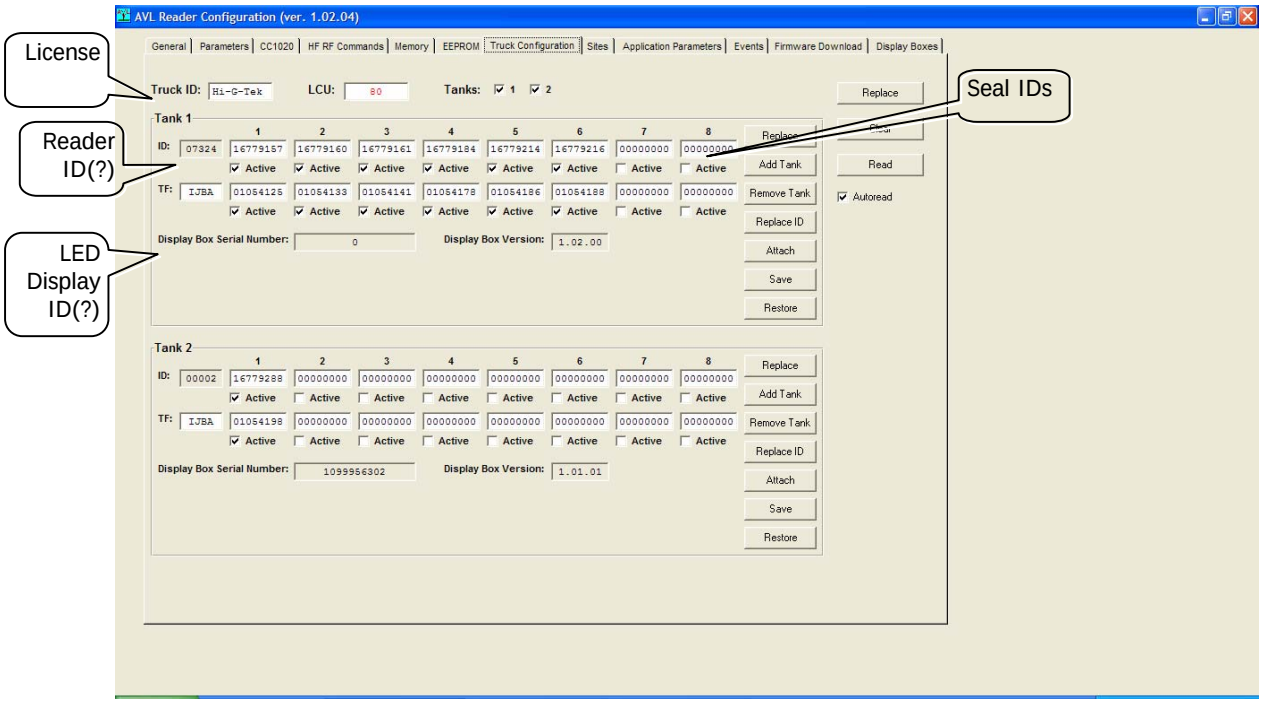

Figure 4-1. Truck Configuration Window

2. Verify that the **Autoread** checkbox is checked.
3. Click the **Read** button and the Reader ID and the Seal Status Indicator Serial Number will appear in their respective fields.
4. Enter the Truck ID and check the number of tanks in the configuration currently implemented (1/2).
5. In the Tank 1 and Tank 2 field areas, enter the seal ID numbers of all the hatch and valve departments.
6. Click the **Attach** button to transfer all setup information to Reader.

Taking truck (and trailer) out to an uncovered area where GPS access can be tested.

4.1.3 Configuring Application Parameters

1. Click **Application Parameters** tab in menu toolbar. The following window appears.

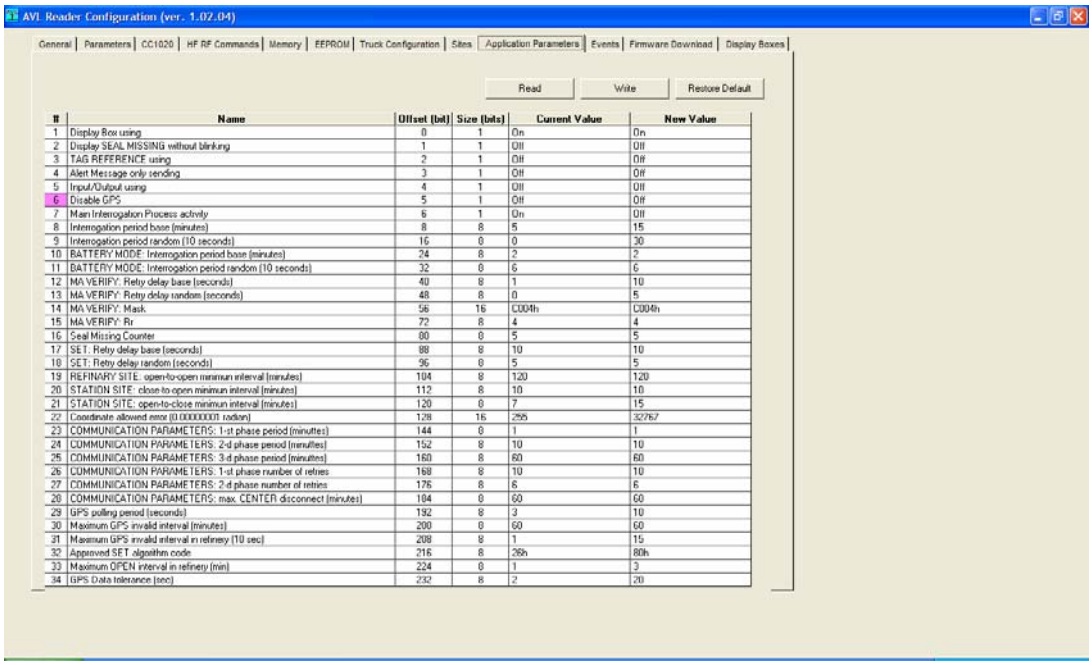

#	Name	Offset (bit)	Size (bits)	Current Value	New Value
1	Display Box using	0	1	On	On
2	Display SEAL MISSING without blinking	1	1	Off	Off
3	TAG REFERENCE using	2	1	Off	Off
4	Alert Message only sending	3	1	Off	Off
5	Input/Output using	4	1	Off	Off
6	Disable GPS	5	1	Off	Off
7	Main Interrogation Process activity	6	1	On	Off
8	Interrogation period base (minutes)	8	8	5	15
9	Interrogation period random (10 seconds)	16	8	0	30
10	BATTERY MODE: Interrogation period base (minutes)	24	8	2	2
11	BATTERY MODE: Interrogation period random (10 seconds)	32	8	6	6
12	MA VERIFY: Retry delay base (seconds)	40	8	1	10
13	MA VERIFY: Retry delay random (seconds)	48	8	0	5
14	MA VERIFY: Mask	56	16	C004h	C004h
15	MA VERIFY: Rr	72	8	4	4
16	Seal Missing Counter	80	8	5	5
17	SET: Retry delay base (seconds)	88	8	10	10
18	SET: Retry delay random (seconds)	96	8	5	5
19	REFINARY SITE: open-to-open minimun interval (minutes)	104	8	120	120
20	STATION SITE: close-to-open minimun interval (minutes)	112	8	10	10
21	STATION SITE: open-to-close minimun interval (minutes)	120	8	7	15
22	Coordinate allowed error (0.00000001 radian)	128	16	255	32767
23	COMMUNICATION PARAMETERS: 1-st phase period (minuttes)	144	8	1	1
24	COMMUNICATION PARAMETERS: 2-d phase period (minuttes)	152	8	10	10
25	COMMUNICATION PARAMETERS: 3-d phase period (minuttes)	160	8	60	60
26	COMMUNICATION PARAMETERS: 1-st phase number of retries	168	8	10	10
27	COMMUNICATION PARAMETERS: 2-d phase number of retrins	176	8	6	6
28	COMMUNICATION PARAMETERS: max. CENTER disconnect (minutes)	184	8	60	60
29	GPS polling period (seconds)	192	8	3	10
30	Maximum GPS invalid interval (minutes)	200	8	60	60
31	Maximum GPS invalid interval in refinery (10 sec)	208	8	1	15
32	Approved SET algorithm code	216	8	26h	80h
33	Maximum OPEN interval in refinery (min)	224	8	1	3
34	GPS Data tolerance (sec)	232	8	2	20

Figure 4-2. Application Parameters Tab

2. Adjust the application parameters.

Verify that the AVL unit ID numbers are recorded in the server.

4.1.4 Verifying LED Display

The LED Seal Status Indicators mirror the status of the seals, securing the tanker hatches and valves. The user must verify that the displays view the open/closed statuses of all the seals.

To verify Display operationability

1. Click the **Seal Status Indicators** tab in the menu toolbar. The following window appears.

Figure 4-3. Seal Status Indicators Tab

2. Verify that the display is operational: Green – Seal Closed; Red – Seal Open.
   - Click **All Green** and **Apply**
   - Click **All Red** and **Apply**
3. Verify that display responds accordingly
4. Wavel various commands to display and view responses.

4.1.5 Interrogating Seals

The Events tab of the Set GUI is used in order to verify the communication between the Reader and the seals and that the events are being transmitted to the Reader.

To interrogate the seals

1. Click the **Events** tab from the menu toolbar. The following window appears.

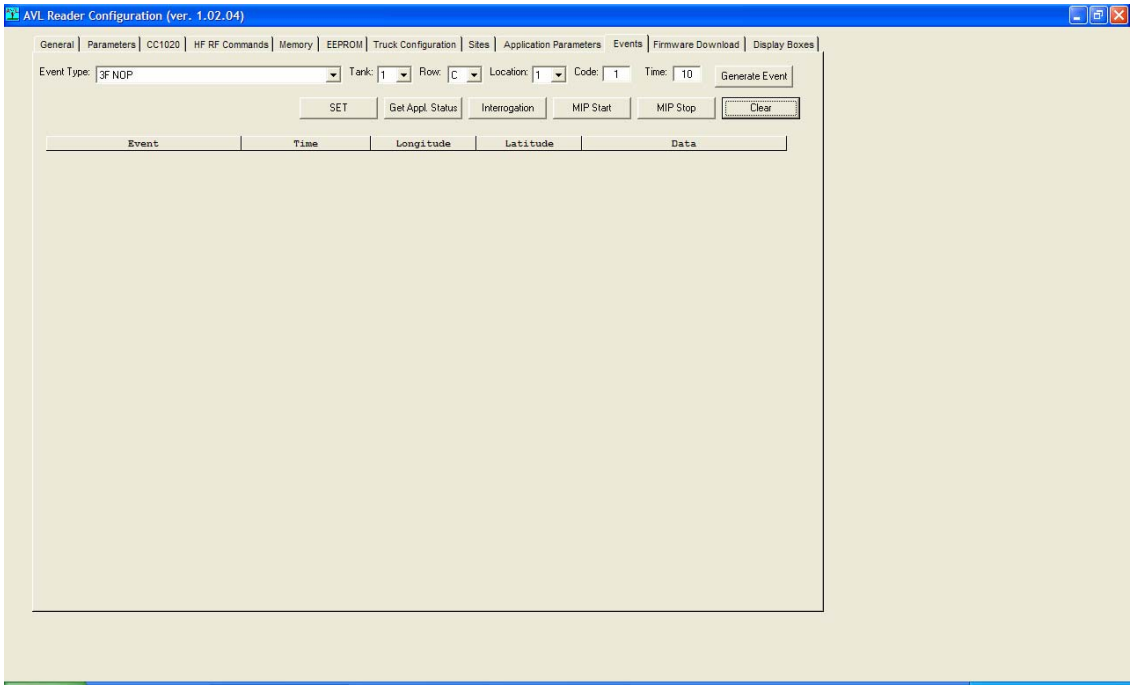

Figure 4-4. Events Tab

2. Click the **MIP Start** button. A list of allocated seals, identified by the Reader, is shown.
3. Click **Interrogation** button to execute command and verify that all 'attach' commands are OK.

NOTE: If there is no response, perform another interrogation.

4. Click **Get Application Status** and view response prompt – GPS OK, battery, etc.

4.1.6 Configuring Site Coordinates

The coordinates of the various locations that the Tanker Truck is to pass must be defined....

1. Click the **Sites** tab. The following window appears.

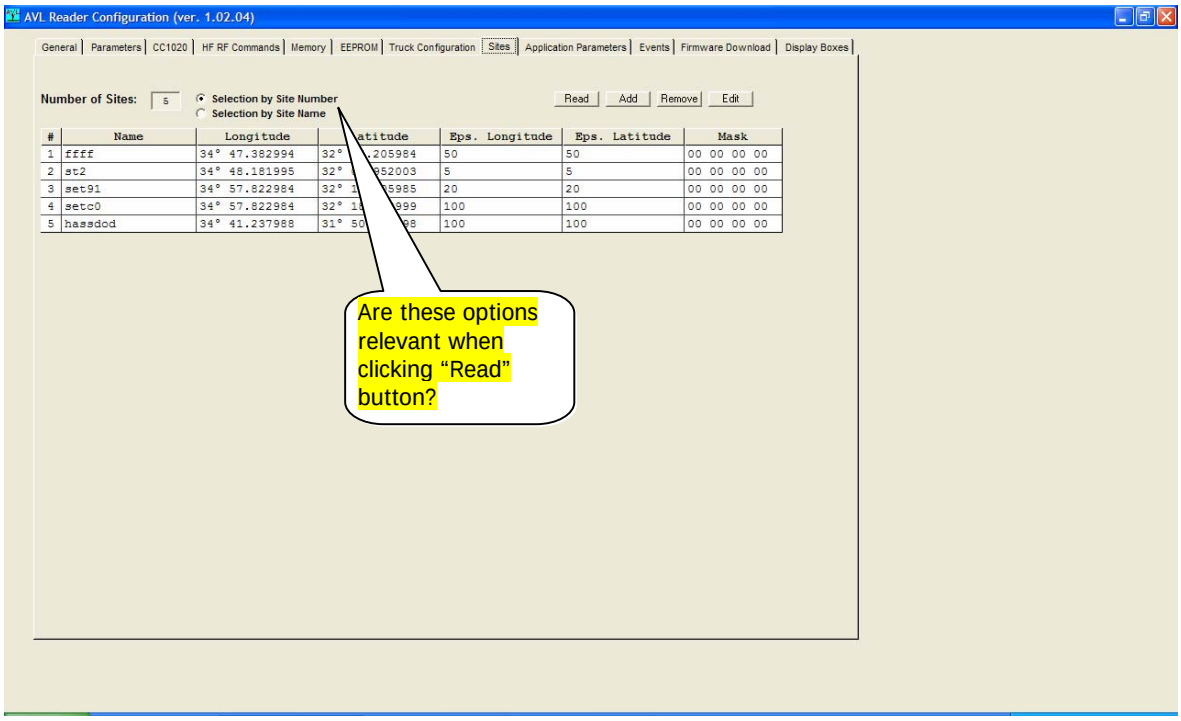

Figure 4-5. Sites Tab

2. Click **Add** and enter all the relevant refineries with coordination and geo-fence according to the following parameters:

Name	Name of site
Longitude	Longitude coordinates of site
Latitude	Latitude coordinates of site
Eps. Longitude	
Eps. Latitude	
Mask	

4.2 Fleet Management SW

- Verify (using the Fleet Management SW) that the command (**Get Status)** of the unit invokes the appropriate response. (i.e. location). If OK, means there is com with the server in both directions.
- Make sure all seals are closed. And then perform SET.
- Verify that all LEDs are green.
- Open each of the seals, hatches and valves. Verify that the correct status is received at the fleet application.

4.2.1 Seal Configuration and Management

- Defining seal parameter thresholds
- Writing and reading seal's electronic manifest such as cargo type, source, destination, etc.
- Viewing seal status
- Viewing events stored on seals
- Sending commands to seals – Set, Read Events, etc.

4.2.2 Reader Configuration and Management

- Configuring Readers to forward interrogation (Verify) responses and seal initiated events (Bursts) from specific seals in order to optimize operation
- Configuring Verify command (interrogation) parameters per Reader to optimize operation in specific zones

4.2.3 Monitoring Events

- Burst and Verify events
- Real-time display of seal events such as opening of locks, tampering, motion, etc.
- Each event is displayed with detailed information fields such as event source, generation time, Reader ID, etc.
- Filtering displayed information according to user defined criteria

4.2.4 Event Notification Options

Users can be notified of events through a variety of methods:

- SMS, E-mail and Voice messages to defined destinations
- Sound or visual on-screen alarms

4.2.5 Report Generation Options

Users can generate reports based on received events by filtering the received events according to various user defined criteria such as date, event type, source, Reader ID, etc.

The selected events can then be saved as a *.TXT file.

5.Technical Specifications

5.1 AVL Reader Technical Specifications

RF Characteristics:

916MHz Model

HF Tx/Rx Channel (Operating Frequency)	Channel : 916.5 MHz Modulation : FSK with 40KHz deviation Data rate : 16KHz
LF Tx/Rx	Channel : 125KHz channel Modulation : Amplitude Modulation Data rate : 4KHz data rate

433.92MHz Model

HF Tx/Rx Channel (Operating Frequency)	Channel : 916.5 MHz Modulation : FSK with 40KHz deviation Data rate : 16KHz
LF Tx/Rx	Channel : 125KHz channel Modulation : Amplitude Modulation Data rate : 4KHz data rate

Performance Characteristics

Range	Up to 30 meter radius (depending on obstructions and topology)
Back-up Battery	Provides a minimum of 3 hours in typical operation.

NOTE: Back-up Battery is **NOT** replaceable .Do not try to replace back-up battery with any kind of rechargeable battery inside the unit.

Interfaces:

RS232	For setup and configuration. For interface with the GPS/Cellular Modem
RS485	Protected. For communication with Seal Status Indicators.
SMA Reverse polarity	Used for connection to antenna

Power Requirements:

Power supply type	External
Voltage Input	Nominal 24VDC Minimum 9VDC Maximum 32VDC
Power Consumption	(Connected to two Display Units - via Protection Unit) 7W Max

Physical Characteristics:

Dimensions	56x98x34mm (not including antenna)
Weight	350gr
Environmental Conditions	As per SAEJ1455 cabin installation

Part Numbers:

Model	P/N	R.F Communication Channel
916 MHz	IG- AV1-43-916	HF Channel Only
916 MHz	IG- AV2-43-916	HF + LF (125KHz) Channel
433.92MHz	IG- AV1-43-433	HF Channel only
433.92MHz	IG- AV2-43-433	HF + LF (125KHz) Channel

Standards:

916 MHz Model	FCC compliance - pending
433 MHz Model	CE compliance - pending

5.2 Seal Status Indicator Specifications

Power and Communication interface:

Power	+12VDC regulated (via Protection Box)
Interface	RS485 -Towards AVL Reader (via Protection Box)

Physical Characteristics:

Dimensions	120 x 64 x 30 mm
Weight	400gr
Environmental Conditions	Operating Temperature : 0°C to +50°C Storage Temperature : 0°C to +70°C Humidity : 50% non-condensing

Part Numbers:

P/N	Description
IG- FLD-01	Hebrew caption
IG- FLD-02	English caption

Standards:

916 MHz Model	FCC compliance - pending
433 MHz Model	CE compliance - pending

5.3 Protection unit

Power Requirements:

Power supply type	External
Voltage Input	Nominal 24VDC Minimum 9VDC Maximum 32VDC
Voltage Output	12VDC
Power Consumption	(Connected to two Display Units - via Protection Unit) 7W Max

Interfaces:

RS485	Protected channel For communication with Seal Status Indicators.

Physical Characteristics:

Dimensions	56x98x34mm (not including antenna)
Weight	350gr
Environmental Conditions	As per SAEJ1455 cabin installation

Part Numbers:

P/N	
IG-PRT-01	Protected RS485 lines + 12VDC regulated

Standards:

916 MHz Model	FCC compliance - pending
433 MHz Model	CE compliance - pending