A240RC.sch-1 - Fri Mar 05 11:34:22 1999

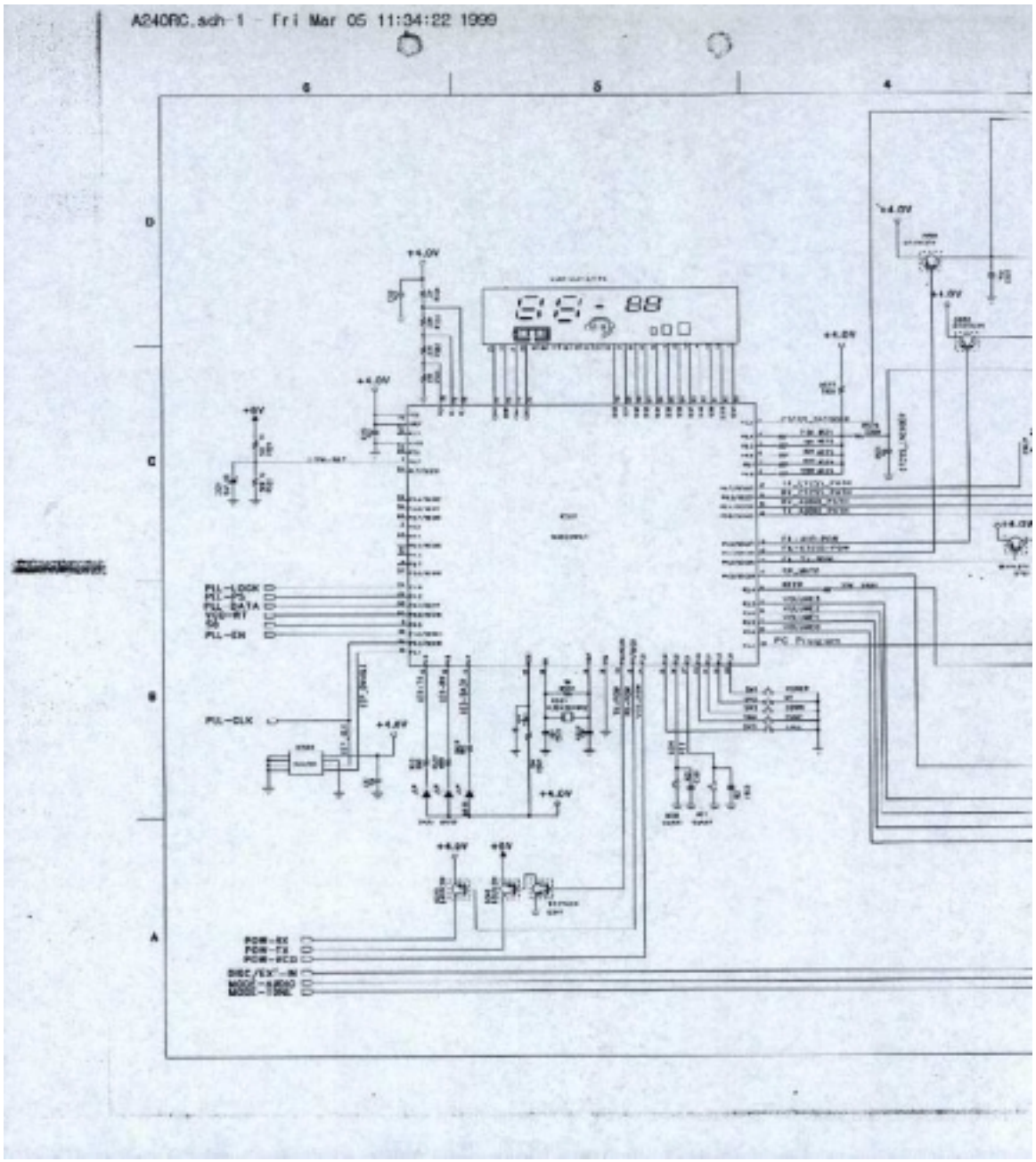

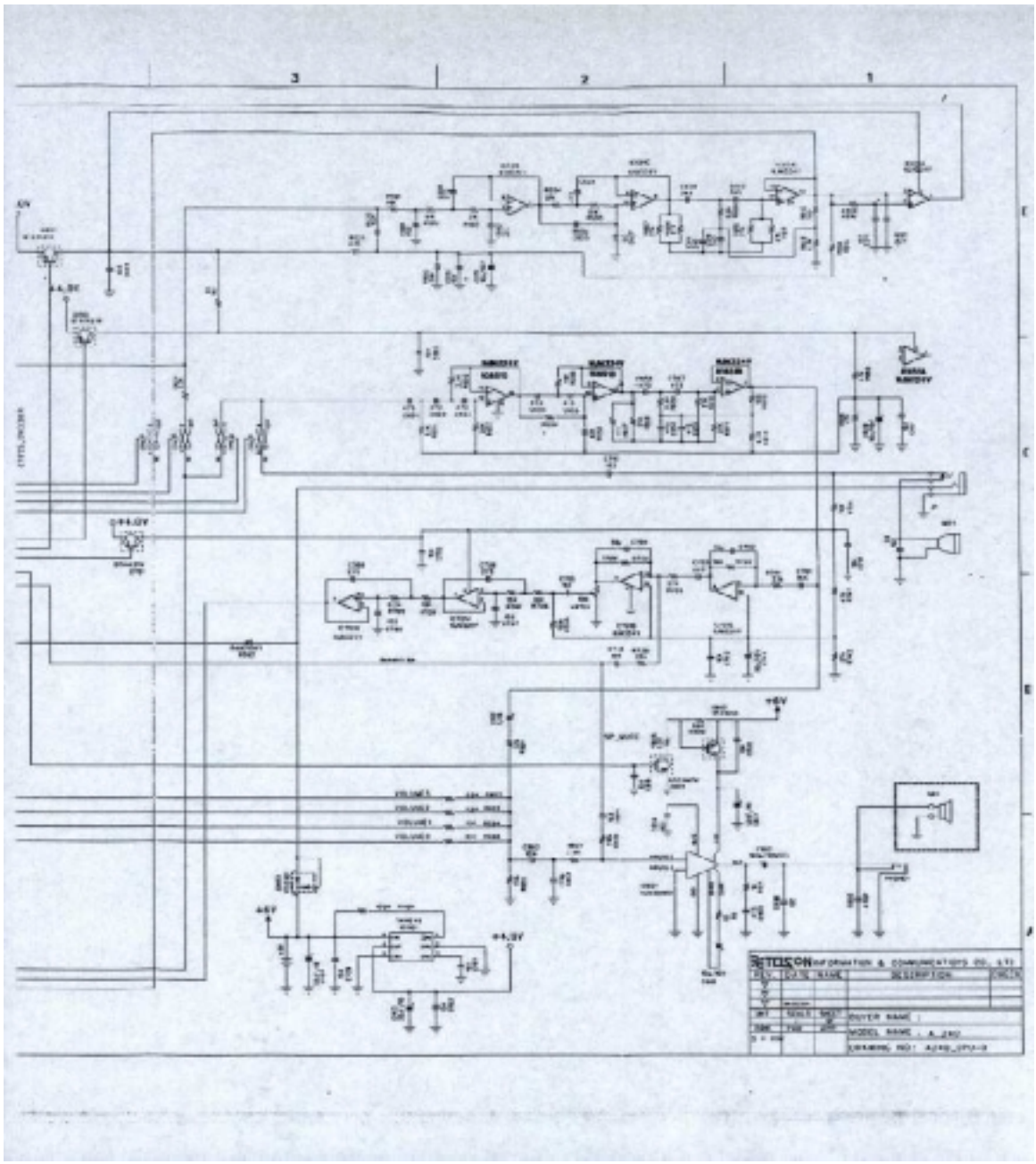

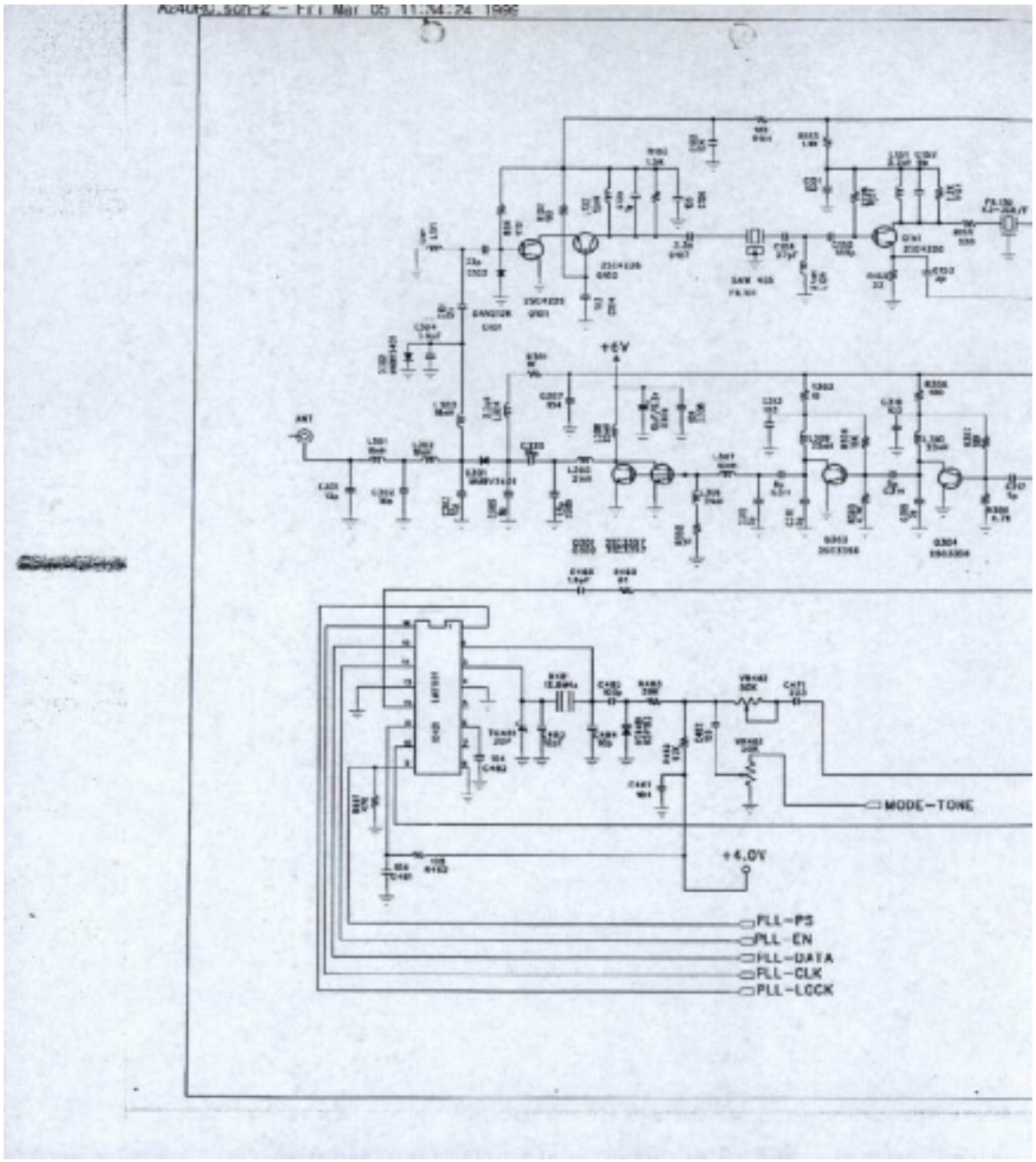
+6V
ANT
MODE-TONE
+4.0V
PLL-PS
PLL-EN
PLL-DATA
PLL-CLK
PLL-LOCK

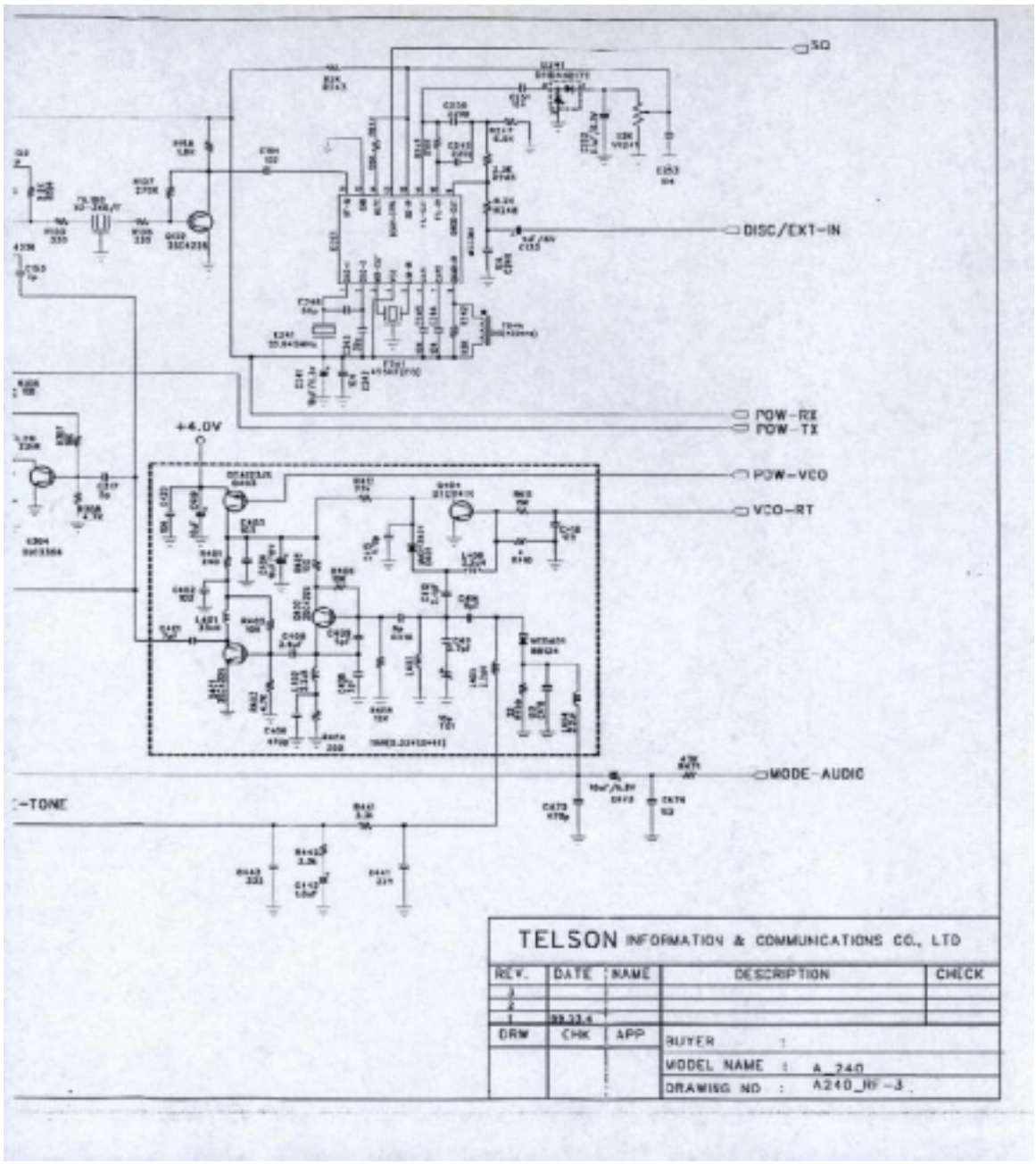

TELSON INFORMATION & COMMUNICATIONS CO., LTD

REV.	DATE	NAME	DESCRIPTION	CHECK
3				
2				
1	99.12.4			

DRW	CHK	APP	
			BUYER :
			MODEL NAME : A_240
			DRAWING NO : A240_RF-3