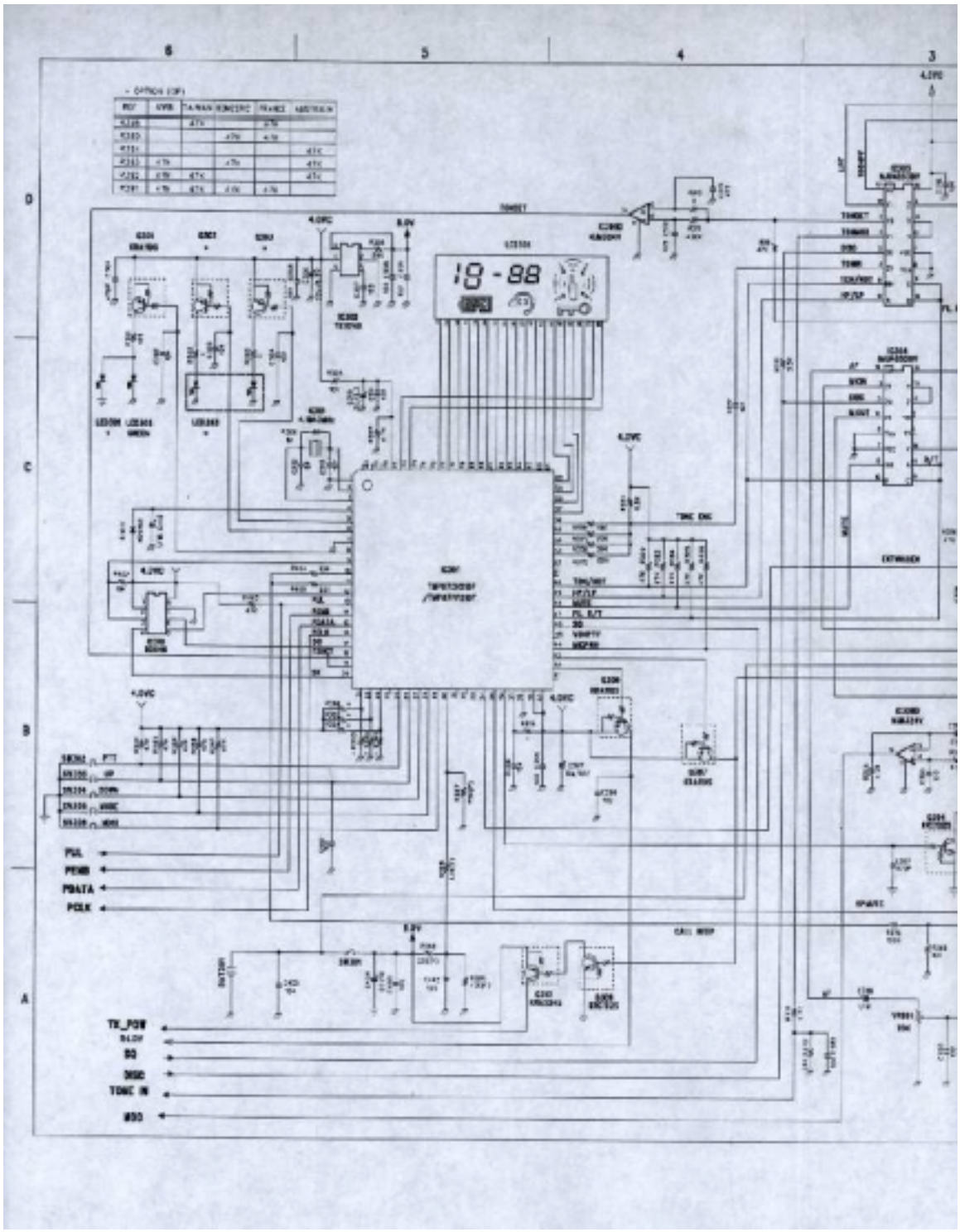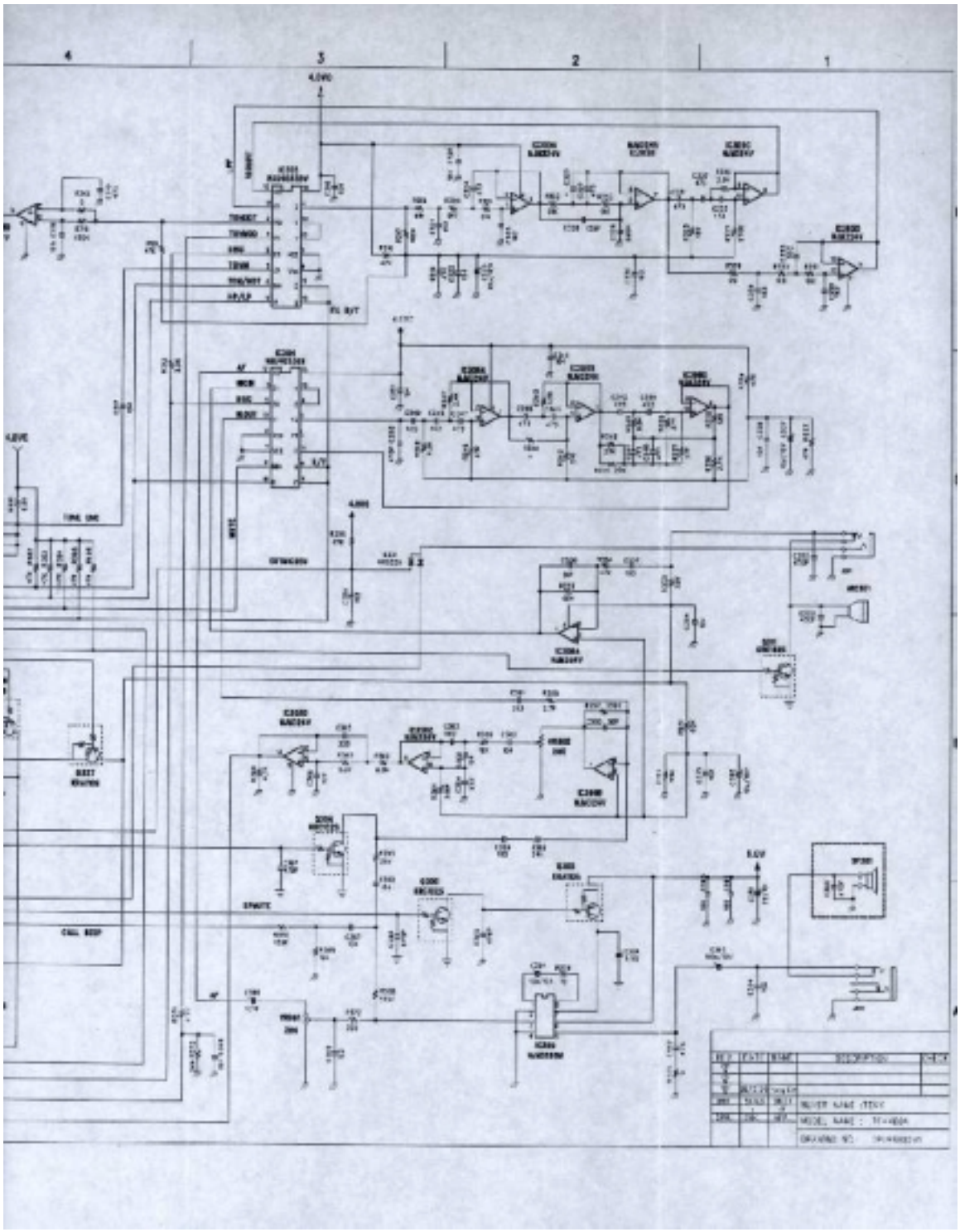
6
5
4
3
D
C
B
A
18-88
TONE DEC
EXPANDER
PSL
PSMB
PSDATA
PSCLK
TX_POW
SQ
MSC
TONE IN
MIC