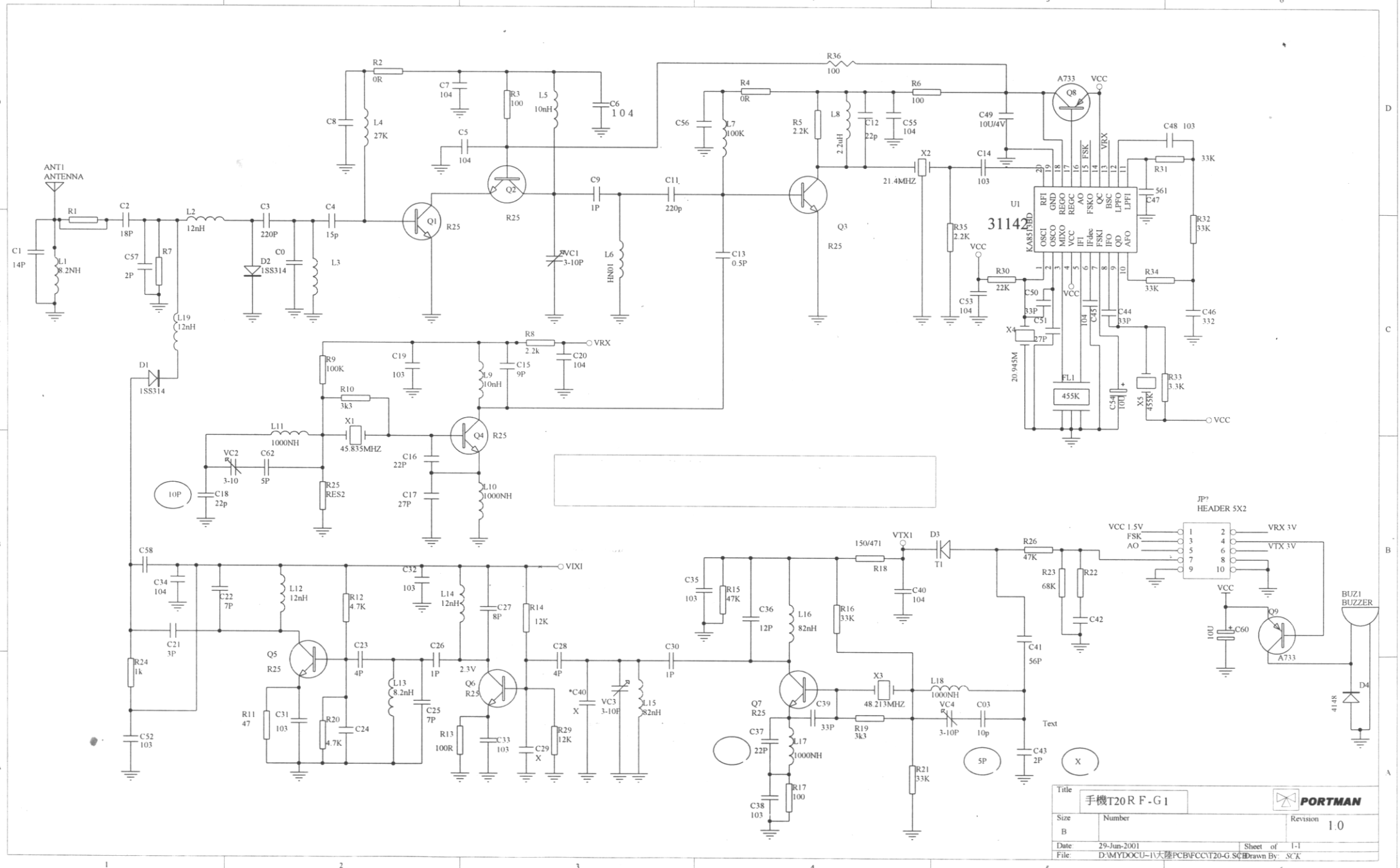
ANT1
ANTENNA
R1
C2
18P
L2
12nH
C3
220P
C4
15p
C1
14P
L1
8.2NH
C57
2P
R7
D2
1SS314
C0
L3
L19
12nH
D1
1SS314
R2
0R
C7
104
R3
100
L5
10nH
C6
104
C8
L4
27K
C5
104
Q1
R25
Q2
R25
C9
1P
C11
220p
VC1
3-10P
L6
HN01
R36
100
R4
0R
R6
100
C56
L7
100K
R5
2.2K
L8
2.2uH
C12
22p
C55
104
C49
10U/4V
A733
Q8
VCC
VRX
FSK
C48
103
R31
33K
X2
21.4MHZ
C14
103
U1
31142
KA8513BD
RFI
GND
REGO
REGC
AO
FSKO
QC
BSC
LPFO
LPFI
OSC1
OSCO
MIXO
VCC
IFI
IFdec
FSKI
IFO
QD
AFO
561
C47
R32
33K
Q3
R25
C13
0.5P
R35
2.2K
VCC
R30
22K
C53
104
C50
33P
C51
27P
X4
20.945M
R34
33K
C44
33P
C45
104
C46
332
FL1
455K
C54
10U
X5
455K
R33
3.3K
VCC
R8
2.2k
VRX
C20
104
C19
103
R9
100K
L9
10nH
C15
9P
R10
3k3
X1
45.835MHZ
L11
1000NH
VC2
3-10
C62
5P
C18
22p
10P
R25
RES2
Q4
R25
C16
22P
C17
27P
L10
1000NH
C58
C34
104
C22
7P
L12
12nH
R12
4.7K
C32
103
L14
12nH
C27
8P
R14
12K
VIXI
C21
3P
R24
1k
Q5
R25
C23
4P
C26
1P
2.3V
Q6
R25
C28
4P
C30
1P
R11
47
C31
103
R20
4.7K
C24
L13
8.2nH
C25
7P
R13
100R
C33
103
C29
X
R29
12K
*C40
X
VC3
3-10P
L15
82nH
C52
103
C35
103
R15
47K
C36
12P
L16
82nH
R16
33K
VTX1
D3
T1
150/471
R18
C40
104
R26
47K
R23
68K
R22
C42
JP?
HEADER 5X2
VCC 1.5V
FSK
AO
VRX 3V
VTX 3V
VCC
C60
10U
Q9
A733
BUZ1
BUZZER
D4
4148
C41
56P
Q7
R25
C39
33P
X3
48.213MHZ
L18
1000NH
VC4
3-10P
C03
10p
R19
3k3
C37
22P
L17
1000NH
R17
100
C38
103
R21
33K
5P
Text
C43
2P
X
Title
手機T20 R F-G 1
PORTMAN
Size
B
Number
Revision
1.0
Date:
29-Jun-2001
Sheet of 1-1
File:
D:\MYDOCU~1\大陸PCB\FCC\T20-G.SCH
Drawn By: SCK

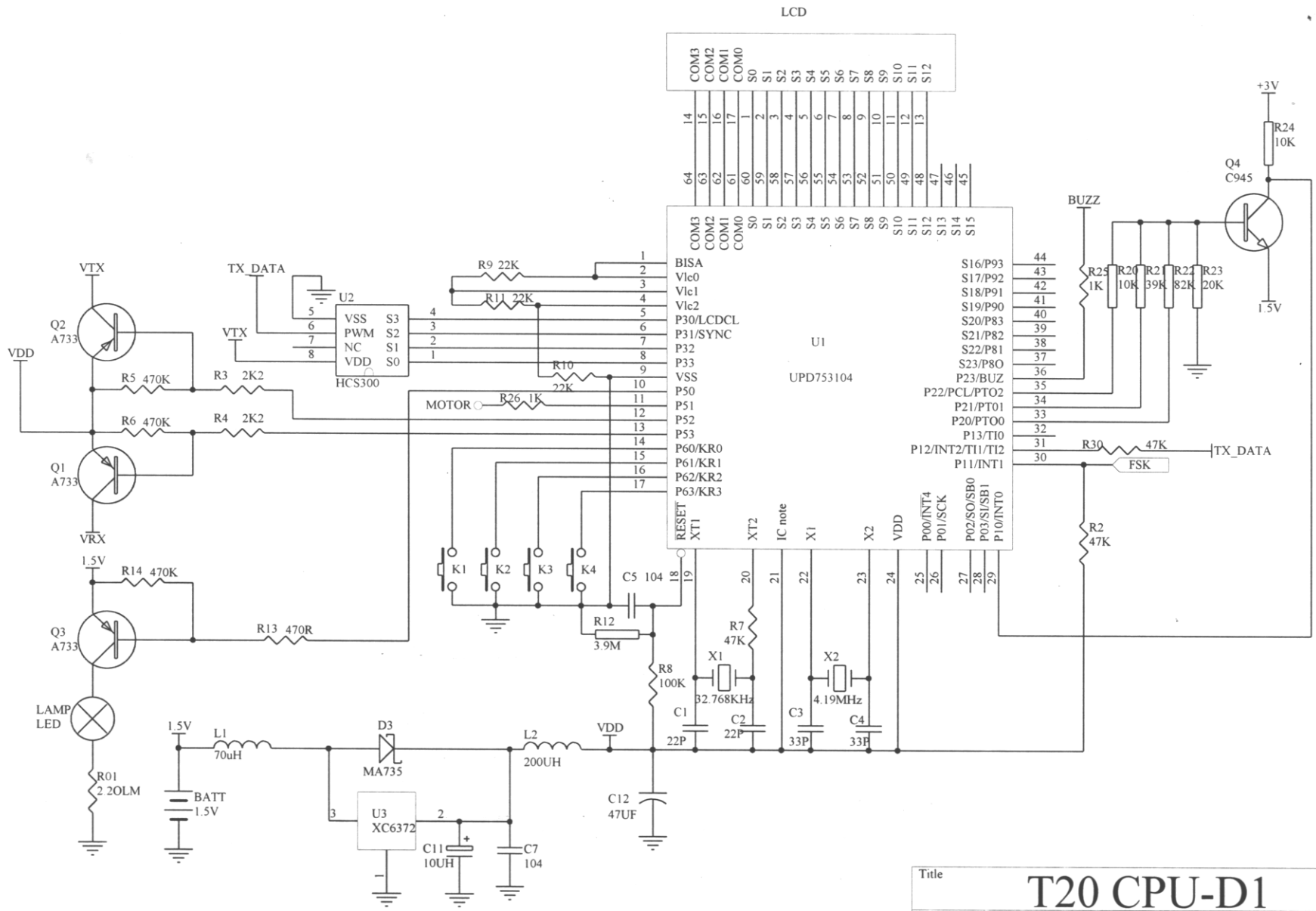

Title	T20 CPU-D1	
Size A4	Number	Revision D1
Date: 29-Jun-2001		Sheet of
File: D:\MYDOCU~1\大陸PCB\T20CPU\T20CPU.SCH	Drawn by: 施昌凱	