Appendix

Percussion Voice List

Note#	Note	Standard(0)	Room(8)	Power(16)	Electronic(24)	Synth(25)	Jazz(32)	Brush(40)	Classic(48)	Effects(56)
24	C	Seq Click H	←	←	←	←	←	←	←	
25	#C	Brush Tap	←	←	←	←	←	←	←	
26	D	Brush Swirl L	←	←	←	←	←	←	←	
27	#D	Brush Slap	←	←	←	←	←	←	←	
28	E	Brush Swirl H	←	←	Rever se Cymbal	Rever se Cymbal	←	←	←	
29	F	Snare Roll	←	←	←	←	←	←	←	
30	#F	Castanet	←	←	Hi-Q	Hi-Q	←	←	←	
31	G	Snare L	←	SD Elec M	Snare L	SD Elec H2	Snare Jazz	Brush Slap L	←	
32	#G	Sticks	←	←	←	←	←	←	←	
33	A	Bass Drum L	←	←	←	←	←	←	Bass Drun L3	
34	#A	Open Rim Shot	←	←	←	←	←	←	←	
35	B	Bass Drum M	←	←	BD Rock	BD Analog 1L	←	←	Gran Casa	
36	C	Bass Drum H	←	BD Rock	BD Rock 2	BD Analog 1H	BD Jazz	BD Jazz	Gran Casa Mute	
37	#C	Side Stick	←	←	←	Analog Side Stick	←	←	←	
38	D	Snare M	SD Room L	SD Rock	SD Elec M	SD Analog 1H	SD Jazz L	Brush Slap H	Marching SD M	
39	#D	Hand Clap	←	←	←	←	←	←	←	High-Q
40	E	Snare H	SD Room H	SD Rock Rim	SD Elec H	SD Analog 1L	SD Jazz H	Brush Tap	Marching SD H	Slap
41	F	Floor Tom L	Room Tom 1	Rock Tom 1	E Tom 1	Analog Tom 1	←	Brush Tom 1	←	Scratch Push
42	#F	Hi-Hat Closed	←	←	←	Analog HH Closed1	←	←	←	Scratch Pull
43	G	Floor Tom H	Room Tom 2	Rock Tom 2	E Tom 2	Analog Tom 2	←	Brush Tom 2	←	Sticks
44	#G	Hi-Hat Pedal	←	←	←	Analog HH Closed2	←	←	←	Square Click
45	A	Low Tom	Room Tom 3	Rock Tom 3	E Tom 3	Analog Tom 3	←	Brush Tom 3	←	Mtrnm .Click
46	#A	Hi-Hat Open	←	←	←	Analog HH 1Open	←	←	←	Mtrnm. Bell
47	B	Mid Tom L	Room Tom 4	Rock Tom 4	E Tom 4	Analog Tom 4	←	Brush Tom 4	←	Gt.FretNoiz
48	C	Mid Tom H	Room Tom 5	Rock Tom 5	E Tom 5	Analog Tom 5	←	Brush Tom 5	←	Gt.CutNoise
49	#C	Crash Cymbal 1	←	←	←	Analog Cymbal	←	←	Hand Cym.L Open	Gt.CutNoise
50	D	High Tom	Room Tom 6	Rock Tom 6	E Tom 6	Analog Tom 6	←	Brush Tom 6	←	String Slap
51	#D	Ride Cymbal 1	←	←	←	←	←	←	Hand Cym.L Closed	Fl.KeyClick
52	E	Chinese Cymbal	←	←	←	←	←	←	←	Laughing
53	F	Ride Cymbal Cup	←	←	←	←	←	←	←	Screaming
54	#F	Tambourine	←	←	←	←	←	←	←	Punch
55	G	Splash Cymbal	←	←	←	←	←	←	←	Heart Beat
56	#G	CowBell	←	←	←	Analog Cowbell	←	←	←	Footsteps 1
57	A	Crash Cymbal 2	←	←	←	←	←	←	Hand Cym.H Open	Footsteps 2
58	#A	Vibraslap	←	←	←	←	←	←	←	Applause
59	B	Ride Cymbal 2	←	←	←	←	←	←	Hand Cym.H Closed	Door Creaking
60	C	Bongo H	←	←	←	←	←	←	←	Door
61	#C	Bongo L	←	←	←	←	←	←	←	Scratch
62	D	Conga H Mute	←	←	←	Analog Conga H	←	←	←	Wind Chimes
63	#D	Conga H Open	←	←	←	Analog Conga M	←	←	←	Car-Engine
64	E	Conga L	←	←	←	Analog Conga L	←	←	←	Car-Stop
65	F	Timbale H	←	←	←	←	←	←	←	Car-Pass
66	#F	Timbale L	←	←	←	←	←	←	←	Car-Crash
67	G	Agogo H	←	←	←	←	←	←	←	Siren
68	#G	Agogo L	←	←	←	←	←	←	←	Train
69	A	Cabasa	←	←	←	←	←	←	←	Jetplane
70	#A	Maracas	←	←	←	Analog Maracas	←	←	←	Helicopter
71	B	Samba Whistle H	←	←	←	←	←	←	←	Starship
72	C	Samba Whistle L	←	←	←	←	←	←	←	Gun Shot
73	#C	Cuiro Short	←	←	←	←	←	←	←	Machine Gun
74	D	Cuiro Long	←	←	←	←	←	←	←	Lasergun
75	#D	Claves	←	←	←	Analog Claves	←	←	←	Explosion
76	E	Wood Block H	←	←	←	←	←	←	←	Dog
77	F	Wood Block L	←	←	←	←	←	←	←	HorseGallop
78	#F	Guica Mute	←	←	Scratch Push	Scratch Push	←	←	←	Bird
79	G	Guica Open	←	←	Scratch Pull	Scratch Pull	←	←	←	Rain
80	#G	Triangle Mute	←	←	←	←	←	←	←	Thunder
81	A	Triangle Open	←	←	←	←	←	←	←	Wind
82	#A	Shaker	←	←	←	←	←	←	←	Seashore
83	B	Jingle Bell	←	←	←	←	←	←	←	Stream
84	C	Bell Tree	←	←	←	←	←	←	←	BuBBle

Appendix

Voice List

NO.	PROGRAM CHANGE	BANK	VOICE NAME
Piano			
01	0	0	Acoustic Grand Piano
02	1	0	Brigh Acoustict Piano
03	2	0	Electric Grand Piano
04	3	0	Honky-Tonk Piano
05	4	0	Electric piano 1
06	5	0	Electric Piano 2
07	6	0	Harpsichord
08	7	0	Clavi
Chromatic Percussion			
09	8	0	Celesta
10	9	0	Glockenspiel
11	10	0	Music Box
12	11	0	Vibraphone
13	12	0	Marimba
14	13	0	Xylophone
15	14	0	Tubular Bells
16	15	0	Dulcimer
Organ			
17	16	0	Drawbar Organ
18	17	0	Percussive Organ
19	18	0	Rock Organ
20	19	0	Church Organ
21	20	0	Reed Organ
22	21	0	Accordion
23	22	0	Harmonica
24	23	0	Tango Accordion
Guitar			
25	24	0	Acoustic Guitar(Nylon)
26	25	0	Acoustic Guitar (Steel)
27	26	0	Electric Guitar (Jazz)
28	27	0	Electric Guitar (Clean)
29	28	0	Electric Guitar(Muted)
30	29	0	Overdriven Guitar
31	30	0	Distortion Guitar
32	31	0	Guitar Harmonics
Bass			
33	32	0	Acoustic Bass
34	33	0	Finger Bass
35	34	0	Pick Bass
36	35	0	Fretless Bass
37	36	0	Slap Bass 1
38	37	0	Slap Bass 2
39	38	0	Synth Bass 1
40	39	0	Synth Bass 2
Strings			
41	40	0	Violin
42	41	0	Viola
43	42	0	Cello
44	43	0	Contrabass
45	44	0	Tremolo Strings
46	45	0	Pizzicato Strings
47	46	0	Orchestral Harp
48	47	0	Timpani
Ensemble			
49	48	0	Strings Ensemble 1
50	49	0	Strings Ensemble 2

NO.	PROGRAM CHANGE	BANK	VOICE NAME
51	50	0	Synth Strings 1
52	51	0	Synth Strings 2
53	52	0	Choir Aahs
54	53	0	Voice Oohs
55	54	0	Synth Voice
56	55	0	Orchestra Hit
Brass			
57	56	0	Trumpet
58	57	0	Trombone
59	58	0	Tuba
60	59	0	Muted Trumpet
61	60	0	French Horn
62	61	0	Brass Section
63	62	0	Synth Brass 1
64	63	0	Synth Brass 2
Reed			
65	64	0	Soprano Sax
66	65	0	Alto Sax
67	66	0	Tenor Sax
68	67	0	Baritone Sax
69	68	0	Oboe
70	69	0	English Horn
71	70	0	Bassoon
72	71	0	Clarinet
Pipe			
73	72	0	Piccolo
74	73	0	Flute
75	74	0	Recorder
76	75	0	Pan Flute
77	76	0	Blown Bottle
78	77	0	Shakuhachi
79	78	0	Whistle
80	79	0	Ocarina
Synth Lead			
81	80	0	Lead 1 (Square)
82	81	0	Lead 2 (Sawtooth)
83	82	0	Lead 3 (Calliope)
84	83	0	Lead 4 (Chiff)
85	84	0	Lead 5 (Charang)
86	85	0	Lead 6 (Voice)
87	86	0	Lead 7 (Fifth)
88	87	0	Lead 8 (Bass+Lead)
Systh Pad			
89	88	0	Pad 1 (New Age)
90	89	0	Pad 2 (Warm)
91	90	0	Pad 3 (Polysynth)
92	91	0	Pad 4 (Choir)
93	92	0	Pad 5 (Bowed)
94	93	0	Pad 6 (Metallic)
95	94	0	Pad 7 (Halo)
96	95	0	Pad 8 (Sweep)
Synth Effects			
97	96	0	Fx 1 (Rain)
98	97	0	Fx 2 (Soundrack)
99	98	0	Fx 3 (Crystal)
100	99	0	Fx 4 (Atmosphere)
101	100	0	Fx 5 (Brightness)

NO.	PROGRAM CHANGE	BANK	VOICE NAME
102	101	0	Fx 6 (Goblins)
103	102	0	Fx 7 (Echoes)
104	103	0	Fx 8 (Sci-Fi)
Ethnic			
105	104	0	Sitar
106	105	0	Banjo
107	106	0	Shamisen
108	107	0	Koto
109	108	0	Kalimba
110	109	0	Bagpipe
111	110	0	Fiddle
112	111	0	Shanai
Percussive			
113	112	0	Tinkle Bell
114	113	0	Agogo
115	114	0	Steel Drums
116	115	0	Woodblock
117	116	0	Taiko Drum
118	117	0	Melodic Tom
119	118	0	Synth Drum
120	119	0	Reverse Cymbal
Sound Effects			
121	120	0	Guitar Fret Noise
122	121	0	Breath Noise
123	122	0	Seashore
124	123	0	Bird Tweet
125	124	0	Telephone Ring
126	125	0	Helicopter
127	126	0	Applause
128	127	0	Gunshot
Piano			
129	0	0	Grand Pno
130	0	90	Piano1
131	0	99	AcPiano1
132	0	91	AcPiano2
133	0	92	AcPiano3
134	1	0	BritePro
135	2	0	El Grand Piano 1
136	3	0	HonkyTonk Piano 1
137	3	99	HonkyTonk 2
138	4	0	Electric piano 1
139	5	0	Electric piano 2
140	4	99	ElecPiano3
141	5	99	ElecPiano4
142	4	91	ElecPiano5
143	5	91	ElecPiano6
144	4	98	DetunedEP1
145	5	98	DetunedEP2
146	6	0	Harpsichord
147	6	91	Harpsichord2
148	6	92	Harpsichord3
149	6	99	Harpsichord4
150	6	98	CoupledHarpsichord
151	7	0	Clavi1
152	7	91	Clavinet2
153	7	92	Clavinet3
154	7	99	Clavinet4

Appendix

NO.	PROGRAM CHANGE	BANK	VOICE NAME
Chromatic Percussion			
155	8	0	Celesta
156	8	92	Celesta 2
157	8	99	Celesta 3
158	9	0	Glocken1
159	9	99	Glocken2
160	10	0	Music Box
161	11	0	Vibraphone
162	11	92	Vibes 1
163	11	99	Vibes 2
164	12	0	Marimba 1
165	12	99	Marimba 2
166	13	0	Xylophone 1
167	13	99	Xylophone 2
168	14	0	Tubular Bells
169	14	98	ChurchBell
170	14	99	TubeBell
171	15	0	Dulcimer
Organ			
172	16	0	Drawbar Organ
173	16	98	DetunedOrgan 1
174	17	98	DetunedOrgan 2
175	17	0	Percussive Organ
176	18	0	Rock Organ
177	18	91	ElecOrgan1
178	18	92	ElecOrgan2
179	18	93	ElecOrgan3
180	18	99	ElecOrgan4
181	19	0	Church Organ 1
182	19	98	ChurchOrgan 2
183	19	91	PipeOrgan 1
184	19	92	PipeOrgan 2
185	19	99	PipeOrgan 3
186	20	0	Reed Organ
187	21	0	Accordion
188	21	98	ItalianAccordion
189	21	99	Accordion_MT
190	22	0	Harmonica1
191	22	91	Harmonica2
192	22	99	HarmoPan
193	23	0	Tango Accordion
Guitar			
194	24	0	Nylon Guitar
195	24	98	Ukulele
196	24	99	Guitar1
197	25	0	Steel Guitar 1
198	25	90	Mandolin
199	25	98	StringGuitar
200	25	99	Guitar2
201	26	0	Jazz Guitar
202	26	98	HawaiianGuitar
203	26	99	ElecGuitar1
204	27	99	ElecGuitar2
205	27	0	Clean Guitar
206	27	98	ChorusedGuitar
207	28	0	Muted Guitar
208	28	98	FunkGuitar

NO.	PROGRAM CHANGE	BANK	VOICE NAME
209	29	0	Overdriven Guitar
210	30	0	Distortion Guitar
211	30	98	FeedbackGuitar 1
212	31	0	Guitar Harmonics
213	31	98	GuitarFeedback 2
214	32	0	Acoustic Bass 1
215	32	91	Acou Bass 2
216	32	99	Acou Bass 3
217	33	0	Finger Bass
218	33	99	ElecBass 1
219	34	99	ElecBass 2
220	34	0	Pick Bass
221	35	0	Fretless Bass 1
222	35	91	Fretless 2
223	35	99	Fretless 3
Bass			
224	36	0	Slap Bass 1
225	37	0	Slap Bass 2
226	36	99	SlapBass 3
227	37	99	SlapBass 4
228	38	0	Synth Bass 1
229	39	0	Synth Bass 2
230	38	91	SynthBass 3
231	38	92	SynthBass 4
232	38	98	SynthBass 5
233	39	91	SynthBass 6
234	39	92	SynthBass 7
235	39	98	SynthBass 8
Strings			
236	40	0	Violin 1
237	40	91	Violin2
238	40	99	Violin3
239	40	98	SlowViolin
240	41	0	Viola
241	42	0	Cello 1
242	42	91	Cello 2
243	42	99	Cello 3
244	43	0	Contrabass 1
245	43	99	ContraBass_MT
246	44	0	Tremolo Strings
247	44	99	DoctorSolo
248	45	0	Pizzicato Strings1
249	45	99	Pizzicato 2
250	46	0	Orchestral Harp 1
251	46	91	Harp 1
252	46	99	Harp 2
253	47	0	Timpani 1
254	47	93	Timpani 2
Ensemble			
255	48	0	Strings Ensemble 1
256	49	0	Strings Ensemble 2
257	48	98	OrchestralPad
258	48	99	StringSection1
259	49	99	StringSection2
260	50	99	StringSection3
261	50	0	Synth Strings 1
262	51	0	Synth Strings 2

NO.	PROGRAM CHANGE	BANK	VOICE NAME
263	50	98	SynthStrings3
264	52	0	Choir Aahs
265	52	99	Chorale
266	53	0	Voice Oohs
267	53	99	SoundTrack
268	54	0	Synth Voice
269	54	99	FunnyVox
270	55	0	Orchestra Hit1
271	55	99	OrchestraHit 2
Brass			
272	56	0	Trumpet 1
273	56	91	Trumpet 2
274	56	99	Trumpet 3
275	57	0	Trombone 1
276	57	91	Trombone 2
277	57	99	Trombone 3
278	58	0	Tuba
279	58	90	Tuba 2
280	58	91	BrassSection1
281	58	99	BrassSection2
282	59	0	Muted Trumpet
283	60	0	French Horn 1
284	60	91	FrenchHorns 2
285	60	99	FrenchHorns 3
286	61	0	Brass Section
287	61	98	Brass2
288	62	0	Synth Brass 1
289	63	0	Synth Brass 2
290	62	91	SynthBrass 3
291	62	98	SynthBrass 4
292	62	99	SynthBrass 5
293	63	91	SynthBrass 6
294	63	98	SynthBrass 7
295	63	99	SynthBrass 8
Reed			
296	64	0	Soprano Sax
297	65	0	Alto Sax
298	66	0	Tenor Sax
299	67	0	Baritone Sax
300	64	99	Sax1
301	65	99	Sax2
302	66	99	Sax3
303	67	99	Sax4
304	68	0	Oboe 1
305	68	91	Oboe 2
306	68	99	Oboe2001
307	69	0	English Horn 1
308	69	99	English Horn 2
309	70	0	Bassoon 1
310	70	99	Bassoon 2
311	71	0	Clarinet 1
312	71	91	Clarinet 2
313	71	99	Clarinet 3
Pipe			
314	72	0	Piccolo 1
315	72	91	Piccolo 2
316	72	99	Piccolo 3

Appendix

NO.	PROGRAM CHANGE	BANK	VOICE NAME
317	73	0	Flute 1
318	73	91	Flute 2
319	73	99	Flute 3
320	73	92	BreathPipe
321	74	0	Recorder1
322	74	99	Recorder 2
323	75	0	Pan Flute
324	75	97	Sho
325	75	99	PanPipes
326	76	0	Blown Bottle
327	76	99	BottleBlow
328	77	0	Shakuhachi
329	77	99	Shakuhachi 2
330	78	0	Whistle 1
331	78	91	Whistle 2
332	78	99	Whistle 3
333	79	0	Ocarina
Synth Lead			
334	80	0	Lead 1 (Square)
335	80	98	SineWave
336	80	99	SquareWave
337	81	0	Lead 3 (Sawtooth)
338	81	99	DeepSnare
339	82	0	Lead 5 (Calliope)
340	83	0	Lead 7 (Chiff)
341	84	0	Lead 8 (Charang)
342	85	0	Lead 10(Voice)
343	86	0	Lead 12 (Fifth)
344	87	0	Lead 13 (Bass+Lead)
Systh Pad			
345	88	0	Pad 1 (New Age)
346	89	0	Pad 3 (Warm)
347	90	0	Pad 4 (Polysynth)
348	91	0	Pad 5 (Choir)
349	92	0	Pad 6 (Bowed)
350	93	0	Pad7(Metallic)
351	94	0	Pad 9 (Halo)
352	95	0	Pad 10 (Sweep)
Synth Effects			
353	96	0	Fx 1 (Rain)
354	96	99	IceRain_MT
355	97	0	Fx 2 (Soundrack)
356	98	0	Fx 3 (Crystal)
357	99	0	Fx 4 (Atmosphere)
358	100	0	Fx6(Brightness)
359	101	0	Fx 7 (Goblins)
360	102	0	Fx 8 (Echoes)
361	102	99	EchoPan
362	103	0	Fantasy 1
363	103	99	Fantasy 2
Ethnic			
364	104	0	Sitar
365	104	99	Sitar_MT
366	105	0	Banjo
367	106	0	Shamisen
368	107	0	Koto 1
369	107	98	Koto 2

NO.	PROGRAM CHANGE	BANK	VOICE NAME
370	107	99	Koto_MT
371	108	0	Kalimba
372	109	0	Bagpipe
373	110	0	Fiddle
374	111	0	Shanai
375	111	97	BreathPipe
Percussive			
376	112	0	Tinkle Bell
377	112	91	EchoBell
378	112	92	WindBell
379	112	93	WaterBell
380	112	94	JungleTune
381	112	97	BellSinger
382	112	99	WarmBell
383	113	0	Agogo
384	113	93	SynMallet
385	113	99	MelodicTom
386	114	0	Steel Drums
387	115	0	Woodblock
388	115	97	ElecPerc 1
389	115	99	ElecPerc 2
390	116	0	Taiko Drum
391	116	91	TaikoRim
392	116	98	ConcertBassDrum
393	116	99	Taiko_MT
394	117	0	Melodic Tom1
395	117	98	MeloTom2
396	118	0	Synth Drum
397	118	98	808Tom
398	119	0	Reverse Cymbal
399	119	99	Cymbal
Sound Effects			
400	120	0	GuitarNoise
401	120	92	StringSlap
402	120	99	GtrCutNoise
403	121	0	Breath Noise
404	121	91	FluteKeyClick
405	121	93	Glasses
406	121	99	Triangle
407	122	0	Seashore
408	122	91	Rain
409	122	92	Thunder
410	122	93	Wind
411	122	94	Stream
412	122	95	Bubble
413	122	96	Atmosphere
414	123	0	Bird Tweet
415	123	91	Dog
416	123	92	HorseGallop
417	123	93	Bird 2
418	123	99	BirdTweet
419	124	0	Telephone 1
420	124	91	Telephone 2
421	124	99	Telephone 3
422	124	92	DoorCreaking
423	124	93	DoorSlam
424	124	94	Scratch

NO.	PROGRAM CHANGE	BANK	VOICE NAME
425	124	95	WindChimes
426	125	0	Helicopter
427	125	90	BurstNoise
428	125	91	CarEngine
429	125	92	CarStop
430	125	93	CarPass
431	125	94	CarCrash
432	125	95	Siren
433	125	96	Train
434	125	97	JetPlane
435	125	98	Starship
436	125	99	OneNoteJam
437	126	0	Applause
438	126	91	Laughing
439	126	92	Screaming
440	126	93	Punch
441	126	94	HeartBeat
442	126	95	FootSteps
443	126	99	SchoolDaze
444	127	0	Gunshot1
445	127	91	MachineGun
446	127	92	LazerGun
447	127	93	Explosion
448	127	97	JungleTune
Percussive			
449	0	127	Standard
450	1	127	Standard 2
451	8	127	Room
452	16	127	Power
453	24	127	Eletroni
454	25	127	Synth
455	26	127	Dance
456	32	127	Jazz
457	40	127	Brush
458	48	127	Classic
459	56	127	Effect

Appendix

Style List

NO.	STYLE NAME
8 Beat	
1	8Bt_Mdrn
2	MrsyBeat
3	SurfPop
4	ShufRock
5	8Beat1
6	8Beat2
7	Ballrock
8	60sRock1
9	HardRock
10	8Beat3
11	80sRock
12	Slrock1
13	Slrock2
16 Beat	
14	16Beat1
15	16Beat2
16	16Beat3
17	16Beat4
18	16Beat5
19	PopShuf
20	GuitrPop
21	JazzRock
22	SwngFunk
23	PopRock
24	60Rock2
25	70Ties
26	Surfrock
Ballad	
27	PnoBalad
28	LoveSong
29	68Modern
30	68SlowRk
31	ShowBld
32	PopBalad
33	16BtBld
34	Ballad1
35	Ballad2
36	Ballad3
Dance	
37	Rap
38	DancePop
39	House
40	SwingHse
41	ClubDnce
42	ClubLatn
43	Garage
44	TechnoPop
45	Dance8Bt
46	HipHop
47	ChillOut
48	Cumbia
49	Dancepop
50	Techno1
51	Techno2
Disco	
52	70sDisco

NO.	STYLE NAME
53	LatnDsco
54	DiscoPop
55	DscParty
56	DscFever
57	NYDisco
58	Disco1
59	Disco2
60	Disco3
61	Disco4
Swing&Jazz	
62	BBFast
63	BBMid
64	BBBallad
65	JazzClub
66	Swing
67	JzBallad
68	Dixie
69	Ratime
70	Stride
71	MdrnJazz
72	DixiePop
73	Jazzwals
74	RagtimeP
75	Swing
76	Ulligull
R&B	
77	Soul
78	DtrtPop
79	Rhtmblus
80	68soul
81	Twist
82	RockRolPl
83	BgieWgie
84	68Blues
85	34Gospel
86	GsplShuf
87	Germwalz
88	Gospel
89	Gypsi
90	Rocknrol
91	Rockrol2
92	R_B
93	TwistPop
Country	
94	Ctry8Bt
95	CtryPop
96	CtrySwng
97	Ctry2Bt2
98	CtryBld
99	Bluegras
100	CtryWltzP
101	Cntryrok
102	Cntrywlz
103	Country1
104	Country2
105	Country3
Latin	

NO.	STYLE NAME
106	Merengue
107	Bosanova
108	PopBossa
109	MamboPop
110	Salsa
111	Beguine1
112	Beguine2
113	Reggae
114	SwngRega
115	Baroque
116	Bigband
117	Boogie1
118	Boogie2
119	Latin
120	Macarena
121	Mambo
122	Sacrific
123	Salsa
Ballroom	
124	DancBand
125	EglshWlz
126	Foxtrot1
127	Foxtrot2
128	Slowfox
129	QvkFxtrt
130	QvkStep
131	Tango1
132	Tango2
133	Tango3
134	Tango4
135	TangoHb
136	Pasodobl
137	Samba1
138	Samba2
139	Samba3
140	Sambarok
141	Dscsamba
142	ChaCha1
143	Chacha2
144	Chacha3
145	Chacha4
146	Jive
147	Rhumba1
148	Rhumba2
149	VnsWaltz
150	Carib1
151	Charlstn
152	Cingen98
153	Fastbos1
154	Rave1
155	Rave2
156	Reggea
Traditional	
157	24-Mar
158	March2
159	68March
160	March68

Appendix

NO.	STYLE NAME
161	24Polka
162	68Polka
163	Polka1
164	Polka2
165	Tarntela
166	Sirtaki
167	SctsReel
168	Hawai1
169	Hawai2
170	Mariachi
171	Hollywd
172	Merenque
173	Motown1
174	Mus58
175	Oriental
176	Pasodobl
177	Schlager
178	Sirtaki1
Waltz	
179	SwngWltz
180	JazzWltz
181	Waltz
182	FrnchWlz
183	MordnWlz
184	Slwaltz
185	Trawltz1
186	Trawltz2
187	Vienwltz

NO.	STYLE NAME

NO.	STYLE NAME

MIDI Implementation Chart

Function	Transmitted	Recognized	Remarks
Basic Default	(*1)	1-16CH	
Channel Changed	(*1)	1-16CH	
Mode Default	Mode 3	Mode 3	
Messages	X	X	
Altered	********	X	
Note	0~127	0~127	
Number :True voice	********	0~127	
Velocity Note ON	O 9nH,v=1~127	O 9nH,v=1~127	
Note OFF	O 9nH,v=0 or 8nh	O 9nH,v=0 or 8nh	
Affter Key's	X	X	
Pitch Bender	X	O	
Control Change 0,32	O	O	Bank Select
1	X	O	Modulation
5	X	O	Portamento time
6	O	O	Data Entry
7	O	O	Volume
10	O	O	Pan
11	X	O	Expression
64	O	O	Sustain
65	O	O	Portamento
66	X	O	Sostenuto
67	O	O	Soft pedal
80,81	O	O	DSP TYPE
91,93	O	O	DSP DEPTH
100,101	O	O(*2)	RPN LSB,MSB
120	O	O	All sound off
121	X	O	Reset all Controllers
122	O	O	Local control
Programe	O 0-127	O 0-127	
Change : True	0-127	0-127	
System Exclusive	X	O	
System : Song Position	X	X	
: Song Select	X	X	
Common : Tune	X	X	
Aux : Local on/off	O	O	
: All Notes Off	O	O	
Messages : Active Sense	X	O	
: Reset	X	O	

Mode1:OMNI ON,POLY Mode2:OMNI ON,MONO O: Yes
Mode3:OMNI OFF,POLY Mode4:OMNI OFF,MONO X: NO

*1: Main voice track (01-16).Default: 01
Split voice track (01-16).Default: 02
Dual voice track (01-16).Default: 03
Percussion track (01-16).Default: 10

*2: Registered parameter number:
#0: Pitch sensivity
#1: Fine tuning cents
#2: Coarse tuning in half-tones

Appendix

Specifications

Keyboard:	88Keys with Touch Sensitivity
Display:	LCD Display
Polyphony:	64
Voices:	459
Voice Control:	Sustain, Octave, Touch, Trans, Split, Twin, Tune
Effect:	Reverb, Chorus
Styles:	187
Style Features:	Synchro, Start/Stop, Intro/Ending, Fill In 1, Fill In 2, Acc.Vol, Metronome, Tempo
Keyboard Control:	Normal, Split, Chord, Harmony
Demo:	10
Song Recording:	Multi-track (1 accompaniment + 2 melody track) record and playback
Registration Memory:	4 x 3
Interface:	DC 12V power socket, Pedal socket, Line in/out jack, Phones jack, MIDI in/out jack, USB to Host jack
Speakers:	YD158-7/(4Ω*15W) x 2 YDG50-2-4N12P-R x 2
Dimensions (W x D x H):	1400mm*515mm*880mm
Weight:	54.3Kg

Assembly Instructions

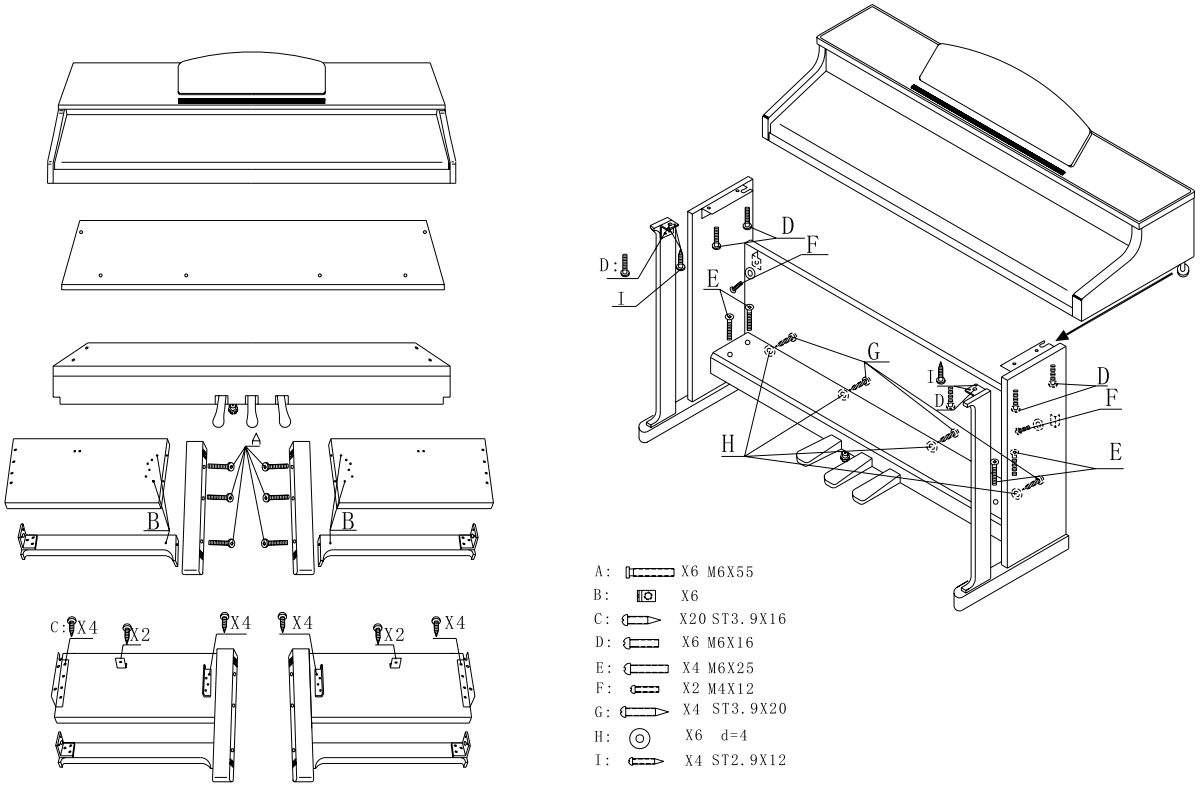

Turn the adjustable Pedal Board support, until it is in firm contact with the floor.

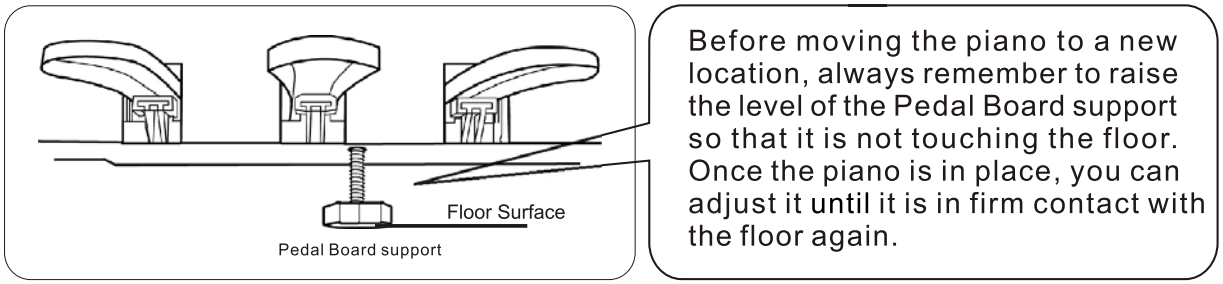

10505798V4.0

FCC STATEMENT

1. This device complies with Part 15 of the FCC Rules. Operation is subject to the following two conditions:

(1) This device may not cause harmful interference.

(2) This device must accept any interference received, including interference that may cause undesired operation.

2. Changes or modifications not expressly approved by the party responsible for compliance could void the user's authority to operate the equipment.

NOTE: This equipment has been tested and found to comply with the limits for a Class B digital device, pursuant to Part 15 of the FCC Rules. These limits are designed to provide reasonable protection against harmful interference in a residential installation.

This equipment generates uses and can radiate radio frequency energy and, if not installed and used in accordance with the instructions, may cause harmful interference to radio communications. However, there is no guarantee that interference will not occur in a particular installation. If this equipment does cause harmful interference to radio or television reception, which can be determined by turning the equipment off and on, the user is encouraged to try to correct the interference by one or more of the following measures:

Reorient or relocate the receiving antenna.

Increase the separation between the equipment and receiver.

Connect the equipment into an outlet on a circuit different from that to which the receiver is connected.

Consult the dealer or an experienced radio/TV technician for help.