SIMMONS

SD600

ELECTRONIC DRUM KIT WITH MESH HEADS

OWNER'S MANUAL

SimmonsDrums.net

SAFETY INSTRUCTIONS

CAUTION
RISK OF ELECTRIC SHOCK
DO NOT OPEN

CAUTION: TO REDUCE THE RISK OF ELECTRIC SHOCK, DO NOT REMOVE CHASSIS. NO USER-SERVICEABLE PARTS INSIDE. REFER SERVICING TO QUALIFIED SERVICE PERSONNEL.

AVIS: RISQUE DE CHOC ELECTRIQUE-NE PAS OUVRIR.

THE LIGHTNING FLASH WITH ARROWHEAD SYMBOL WITHIN AN EQUILATERAL TRIANGLE IS INTENDED TO ALERT THE USER TO THE PRESENCE OF UNINSULATED DANGEROUS VOLTAGE WITHIN THE PRODUCT'S ENCLOSURE THAT MAY BE OF SUFFICIENT MAGNITUDE TO CONSTITUTE A RISK OF ELECTRIC SHOCK TO PERSONS.

THE EXCLAMATION POINT WITHIN AN EQUILATERAL TRIANGLE IS INTENDED TO ALERT THE USER TO THE PRESENCE OF IMPORTANT OPERATING AND MAINTENANCE(SERVICING) INSTRUCTIONS IN THE LITERATURE ACCOMPANYING THE PRODUCT.

APPARATUS SHALL NOT BE EXPOSED TO DRIPPING OR SPLASHING AND THAT NO OBJECTS FILLED WITH LIQUIDS, SUCH AS VASES, SHALL BE PLACED ON THE APPARATUS.

1. Read these instructions.
2. Keep these instructions.
3. Heed all warnings.
4. Follow all instructions.
5. Do not use this apparatus near water.
6. Clean only with dry cloth.
7. Do not block any ventilation openings. Install in accordance with the manufacturer's instructions.
8. Do not install near the heat sources such as radiators, heat registers, stoves, or other apparatus (including amplifiers) that produce heat.
9. Do not defeat the safety purpose of the polarized or grounding-type plug. A polarized plug has two blades with one wider than the other. A grounding type plug has two blades and a third grounding prong. The wide blade or the third prong are provided for your safety, if the provided plug does not fit into your outlet, consult an electrician for replacement of the obsolete outlet.
10. Protect the power cord from being walked on or pinched particularly at plugs convenience receptacles, and the point where they exit from the apparatus.
11. Only use attachments/accessories specified by the manufacturer.
12. Use only with the cart, stand, tripod, bracket, or table specified by the manufacturer, or sold with the apparatus. When a cart is used, use caution when moving the cart/apparatus combination to avoid injury from tip-over (Figure1).

Figure 1

13. Unplug this apparatus during lightning storms or when unused for a long periods of time.
14. Refer all servicing to qualified service personnel. Servicing is required when the apparatus has been damaged in any way, such as power-supply cord or plug is damaged, liquid has been spilled or objects have fallen into the apparatus, the apparatus has been exposed to rain or moisture, does not operate normally, or has been dropped.

WARNING: To reduce the risk of fire or electric shock, do not expose this apparatus to rain or moisture.
CAUTION: Apparatus shall not be exposed to dripping or splashing and no objects filled with liquids, such as vases, shall be placed on the apparatus.
CAUTION: Apparatus shall not be exposed to dripping or splashing and no objects filled with liquids, such as vases, shall be placed on the apparatus.

18274587 Simmons SD600 Manual.indd 2 12/19/18 8:51 AM

CONGRATULATIONS!

...on your purchase of this Simmons SD600 Electronic Drum Kit. To get the most enjoyment from this kit, we recommend that you skim through this manual at least once, then refer back to it to learn more about specific functions.

CARING FOR YOUR SD600 ELECTRONIC DRUM SET

LOCATION

- Keep the drum kit away from direct sunlight, high temperature sources, and excessive humidity to prevent deformation, discoloration, or more serious damage

POWER SUPPLY

- Turn the power switch OFF when the SD600 is not in use.
- The AC adapter should be unplugged from the AC outlet if the SD600 is not to be used for an extended period of time.
- Avoid plugging the AC adapter into an AC outlet that is also powering high-consumption appliances such as electric heaters or televisions. Also avoid using multi-plug adapters, since these can reduce sound quality, cause operation errors, and result in possible damage.
- To avoid damaging the unit, turn the SD600 and all related devices OFF prior to connecting or disconnecting cables.

HANDLING AND TRANSPORT

- Never apply excessive force to controls, connectors, and other parts.
- Unplug cables by gripping the plug firmly. Do not pull on the cable.
- Disconnect all cables before moving the module.
- Physical shocks caused by dropping, bumping, or placing heavy objects on the module can result in scratches and more serious damage.

CLEANING

- Clean the module with a dry, soft cloth.
- A slightly damp cloth may be used to remove stubborn grime and dirt.
- Never use cleaners such as alcohol or thinner.
- To avoid discoloration, do not place vinyl objects on top of module.

ELECTRICAL INTERFERENCE

- The module contains digital circuitry and may cause interference if placed too close to radio or television receivers. If this occurs, move the SD600 further away from the affected equipment.

SERVICE AND MODIFICATION

- There are no user serviceable parts in the drum module.
- Do not attempt to open the sound module or make any change in the circuits or parts of the unit. This would void the warranty.

18274587 Simmons SD600 Manual.indd 3 12/19/18 8:51 AM

TABLE OF CONTENTS

SAFETY INSTRUCTIONS 2
CONGRATULATIONS 3
ASSEMBLED KIT 5
FEATURES 6
ASSEMBLING YOUR KIT 7
CONNECTIONS
- Connecting the Module and Pads 11
- AC Adapter 12
- Connecting Audio Equipment 13
- Connecting MIDI Devices and Computers 14

SD600 DRUM MODULE OPERATION
- Top Panel 15
- Bottom Panel 16
- Back Panel 16
- Side Panel 16

QUICK START OPERATIONS
- Turning the Power On 17
- Basic Operations 17
- Listening to the Demo Songs 18
- Selecting a Kit 18
- Playing a Song 18
- Muting the Drum Part 18

KIT MODE - ADVANCED
- Editing a Kit 19
- Rename a Kit 20
- Saving a Kit 20
- Kit Reset 20

SONG MODE
- Playing a Song 21
- Muting the Drum Part 21
- Editing a Song 21

RECORDING A SONG
- Recording Settings 22
- Clicking Settings 22

UTILITY MODE
- Utility Mode Settings 23
- Trigger Settings 23
- MIDI Note Settings 23
- Pad MIDI Note Assignments 23
- MIDI Local Settings 24
- Auto Power Mode 25
- Factory Reset 25
- Tempo 25

APPENDIX
- Voice List 26
- Kit List 31
- Song List 31
- MIDI Implementation Charts 32
- Warranty 36
- Customer Service 36

18274587 Simmons SD600 Manual.indd 4 12/19/18 8:51 AM

FINAL ASSEMBLED KIT

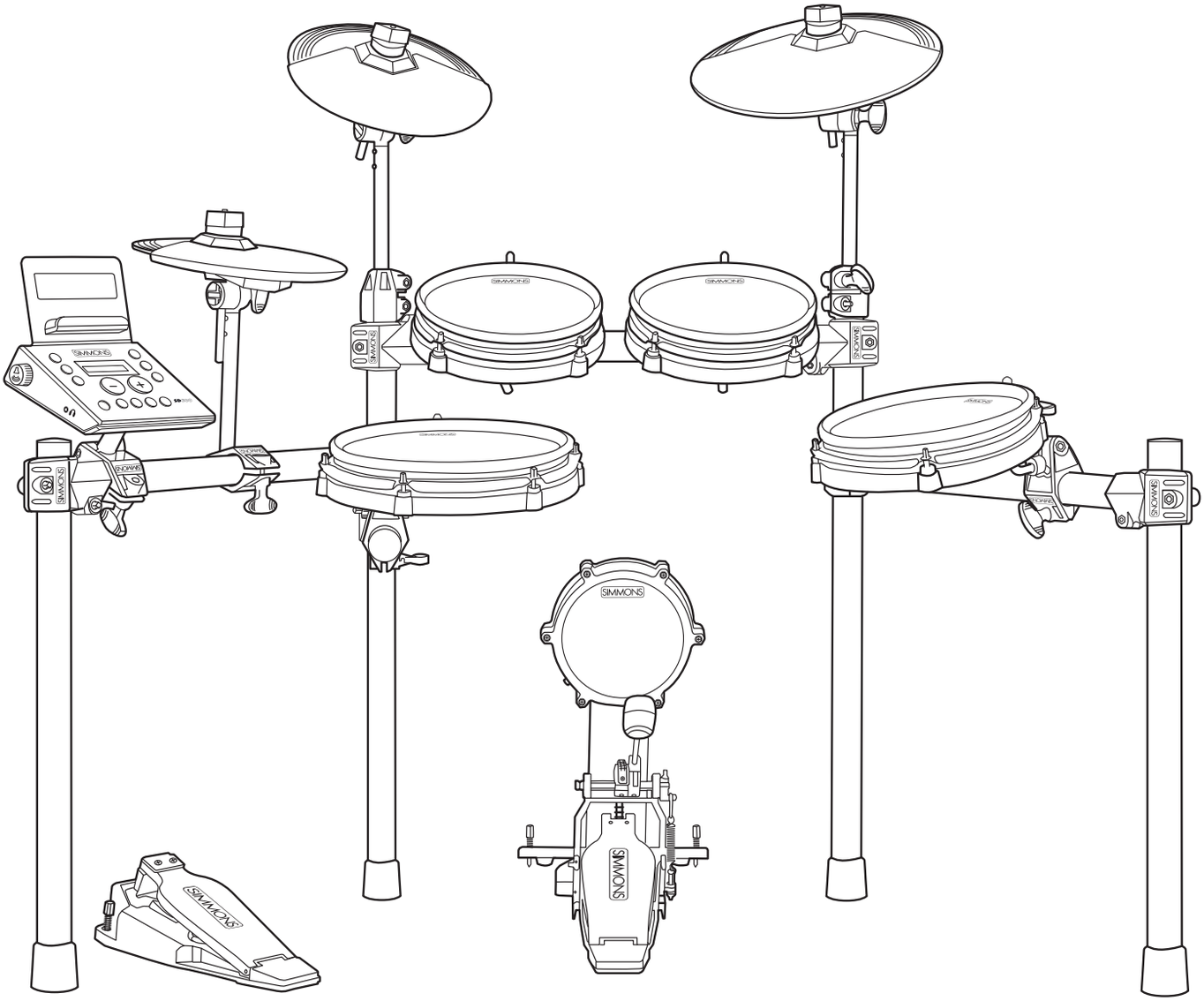

18274587 Simmons SD600 Manual.indd 5 12/19/18 8:51 AM

FEATURES

SD600 SOUND MODULE GENERAL FEATURES

POLYPHONY
- Voices - 64

SOUND
- Drum Voices - 336
- Drum Kits - 35 Preset / 10 User
- Songs - 3 Preset / 10 User

EFFECTS
- Reverb - Hall1, Hall2, Room1, Room2, Room3, Stage1, Stage2, Plate, Delay, Echo, Off.
- Chorus - Chorus1, Chorus2, Chorus3, Chorus4, Feedback, Flanger, Short Delay, Flanger2, Flanger3, Celeste1, Celeste2, Celeste3, Off.

TRIGGER INPUTS
- 25-Pin Multi Trigger Input
- ¼" Tom 4 Input
- ¼" Crash 2 Input

HARDWARE
- Drum Rack and mounts
- Kick Drum pad
- 10" Dual zone Snare mesh drum
- 8" Dual zone Tom mesh drums (x3)
- 10" Single zone Hi Hat pad
- 10" Single zone Crash Cymbal pad with Choke
- 12" Single zone Ride Cymbal pad
- Hi-Hat pedal (x1)
- Kick Beater pedal (x1)

EXTERNAL CONNECTIONS
- 1/8" Headphone Output
- ¼" Master Outputs (x2)
- ¼" Pad Inputs (x2)
- 1/8" TRS Aux Input
- USB Connection for MIDI via computer
- Bluetooth Wireless MIDI

SEQUENCER
- Preset Songs - 3
- User Songs - 10
- Tempo- 20-280 BPM
- Click/Metronome- Click voice, Time Signature, Tempo, Interval, Volume

POWER
- 9v, 600ma

18274587 Simmons SD600 Manual.indd 6 12/19/18 8:51 AM

ASSEMBLING YOUR KIT

INSIDE THIS PACKAGE
Before assembly, please make sure that all the items listed below are present.

Cymbals

Single Zone
12” Ride Cymbal Pad

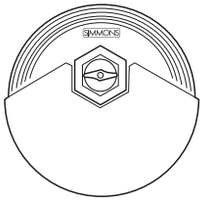

SD600CYM12S

Single Zone with Choke
10” Crash Cymbal Pad

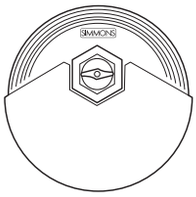

SD600CYM10SC

Single Zone
10” Hi-Hat Cymbal Pad

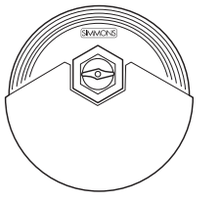

SD600CYM10S

Drum Pads

Dual Zone 10” Snare
Mesh Drum

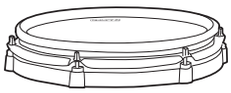

SD600SN10

Dual Zone 8” Tom Mesh Drums

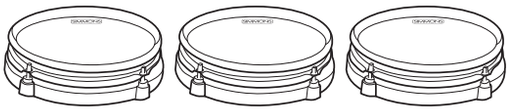

SD600PAD8

Accessories

AC Adaptor

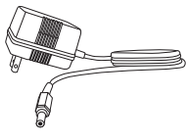

Multi-pin Cable Harness

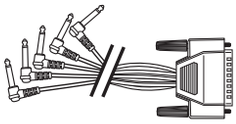

Drum Key

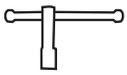

4 L–Rods for Pads

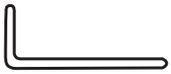

1 Pair
Drumsticks

Hi-Hat Arm (Short)

10–Velcro
Cable Strips

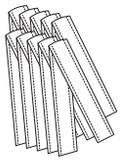

2 Cymbal Arms (Long)

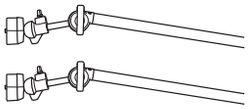

Kick Pad

Bass Drum Pedal / Trigger
module

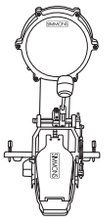

SD600KICK /
SD600BEATER

Hi-Hat Pedal

Foot Controller

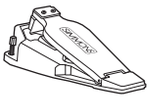

SD600HHC

Drum Rack

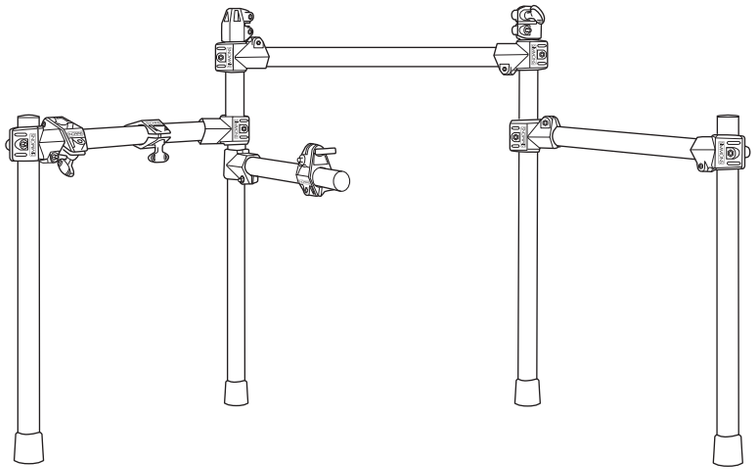

SD600RK

Drum Module

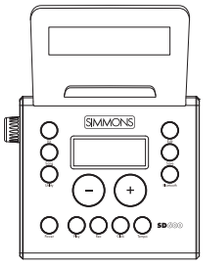

SD600M

18274587 Simmons SD600 Manual.indd 7 12/19/18 8:51 AM

ASSEMBLING YOUR KIT

THE SD600 DRUM RACK COMES PREASSEMBLED WITH ALL CLAMPS ALREADY IN PLACE.

1. Pull rack out of box.
2. Loosen nuts on side arms and snare clamps so you can rotate bars.
3. Pull the side arms and snare arm out into their playing positions.
4. Tighten nuts on side arm clamps.
5. Loosen L-rod wing nuts on tom clamps. Insert textured plastic of L-rod into tom clamps and tighten wing nuts.
6. Loosen wing nuts on pads.
7. Attach pads to L-rods and tighten wing nut on Tom Pads.

NOTE: We recommend putting the SD600 on a drum rug to keep the components together.

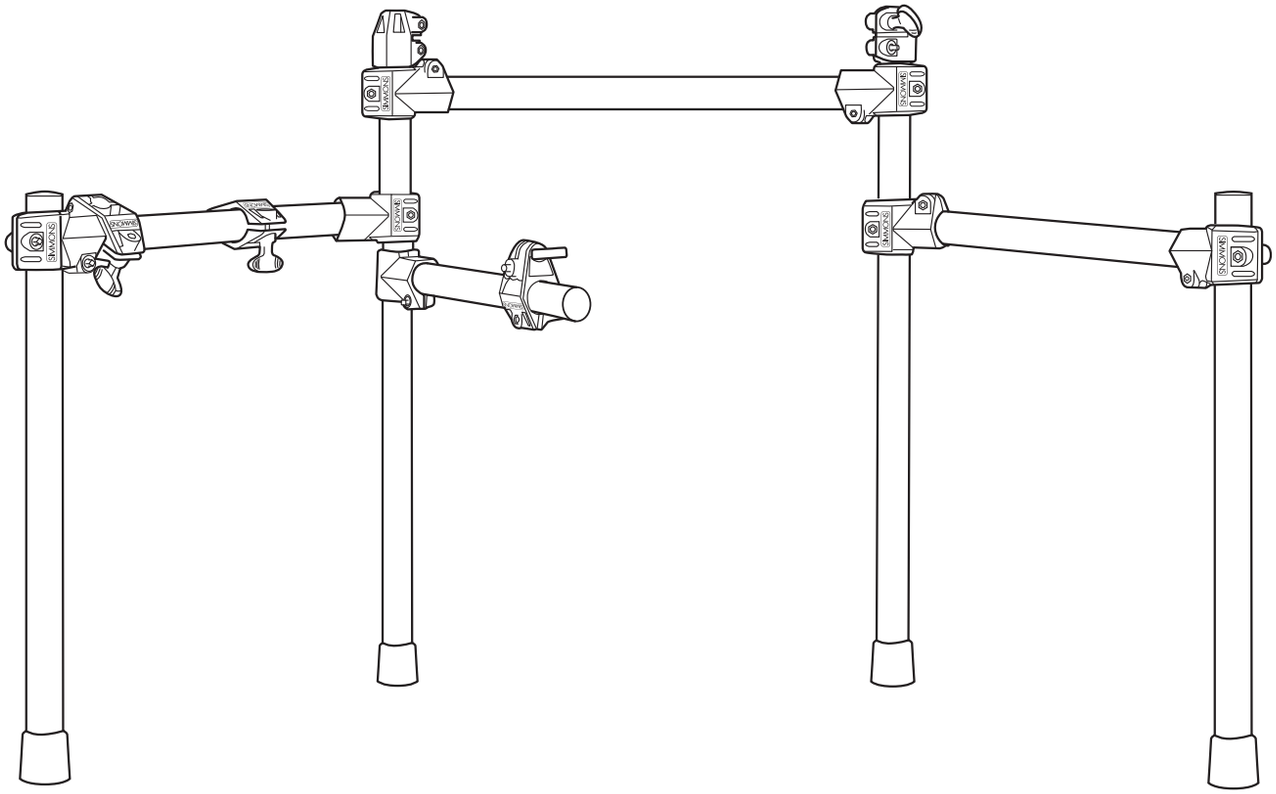

18274587 Simmons SD600 Manual.indd 8 12/19/18 8:51 AM

ASSEMBLING YOUR KIT

ATTACHING THE CYMBAL PADS

1. Insert each cymbal arm into the rack clamp.
2. Insert short hi-hat arm on the left-side arm's cymbal clamp.
3. Remove wing nut from cymbal tilter. Place cymbal pad on tilter assembly.
4. Re-attach washer and wing nut. Tighten wing nut.

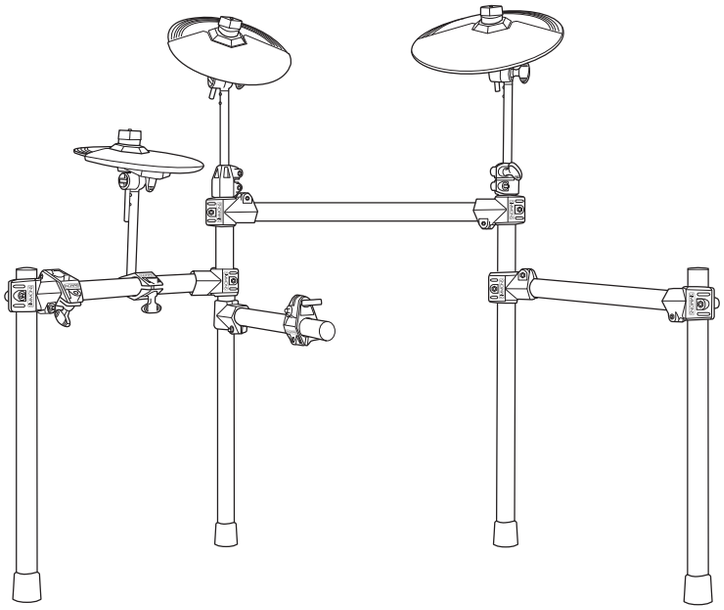

ATTACHING THE DRUM MODULE AND DRUMS

1. Loosen wing screws on drum rack.
2. Place drum module into drum clamp.
3. Tighten wing screw to secure module.
4. Place drums into mounting rods and tighten with wing screws.

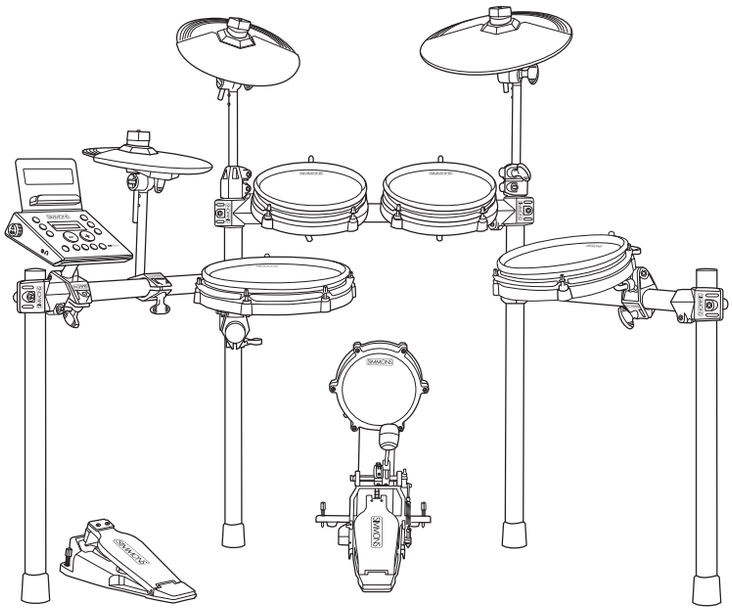

18274587 Simmons SD600 Manual.indd 9 12/19/18 8:51 AM

ASSEMBLING YOUR KIT

BASS DRUM AND HI-HAT PEDAL

1. Place the hi-hat pedal on the floor and to the left, as illustrated below.
2. Connect the kick drum beater pedal to the front of the kick drum pad.
3. Place the bass pad and beater pedal on the floor in the center of the rack as illustrated.

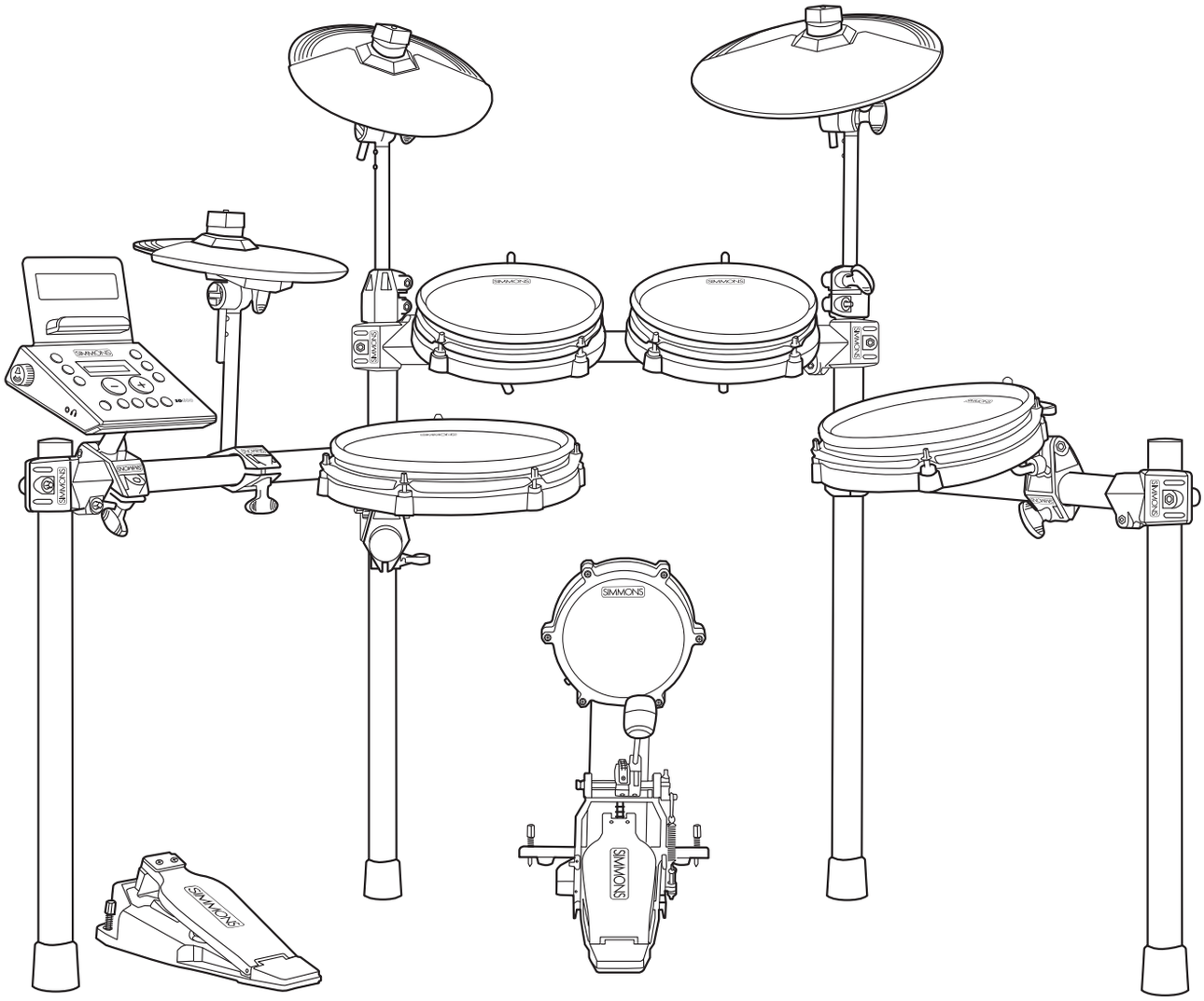

18274587 Simmons SD600 Manual.indd 10 12/19/18 8:51 AM

CONNECTIONS

CONNECTING THE SOUND MODULE AND PADS

CAUTION!
To prevent electric shock and damage to the device, make sure the power is switched OFF on the sound module and all related devices before making any connection.

Using the provided cables, connect the 1/4" jacks to the corresponding drum pads, cymbal pads and kick pad. The pin connection will attach to the multi-pin connector serial port on the bottom of the sound module. *(See illustration below.)*

The voice of the hi-hat pad is controlled by the hi-hat pedal. Plug into the Hi-Hat pedal the plug that is labelled "HHC". Similar to a real drum kit, the hi-hat pad functions as an 'open hi-hat' when the pedal is released. When the pedal is pressed down, it functions as a 'closed hi-hat'.

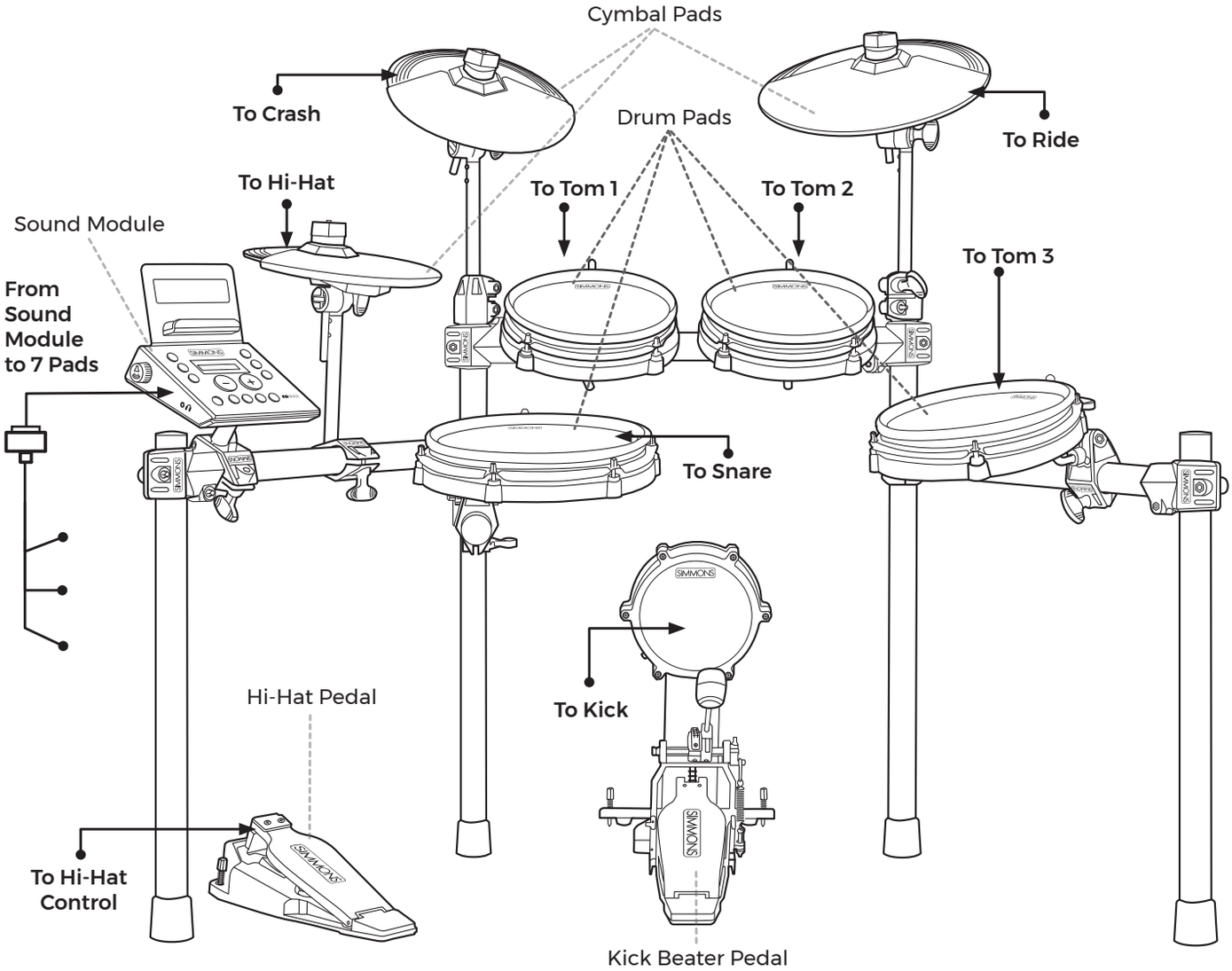

**See Appendix for Pad, Triggers, Name and MIDI chart.*

18274587 Simmons SD600 Manual.indd 11 12/19/18 8:51 AM

CONNECTIONS

CONNECTING THE MODULE AND PADS

Using the provided cables, connect the 1/4" jacks to the corresponding drum pads, cymbal pads and kick pad. The pin connection will attach to the serial port of the sound module. (See illustration.)

NOTE: *The voice of the hi-hat pad is controlled by the hi-hat pedal. Similar to a real drum kit, the hi-hat pad functions as an 'open hi-hat' when the pedal is released. When the pedal is pressed down, it functions as a 'closed hi-hat'. When it is in-between, it is "semi-open hi-hat." Use the included hook-and-loop strips to retain cable to rack.*

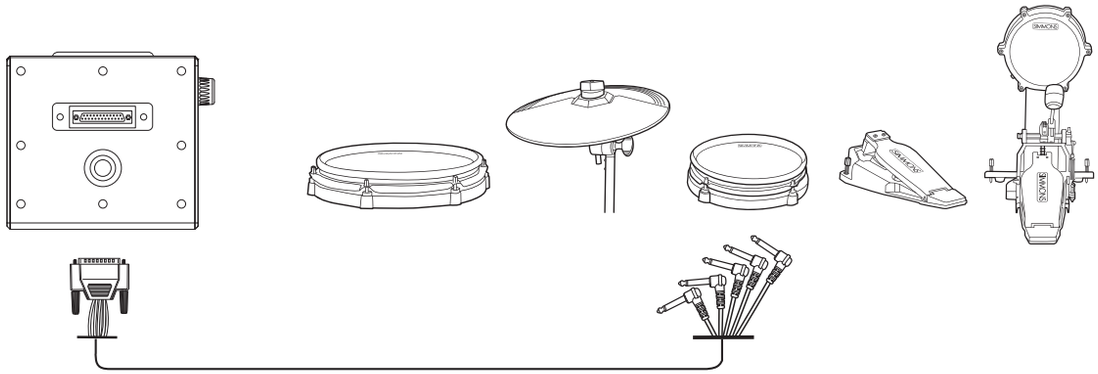

AC ADAPTER

The SD600 module uses an external power supply called an AC Adapter. This plugs into the back of the module.

Make sure the power is switched OFF on the module and connect the power adaptor with the DC IN jack on the rear panel.

NOTE: *To protect the speakers, amplifier and the drum module from damage, lower the volume to the minimum level before switching the power ON.*

Make sure the power is switched OFF when connecting the drum module with external devices.

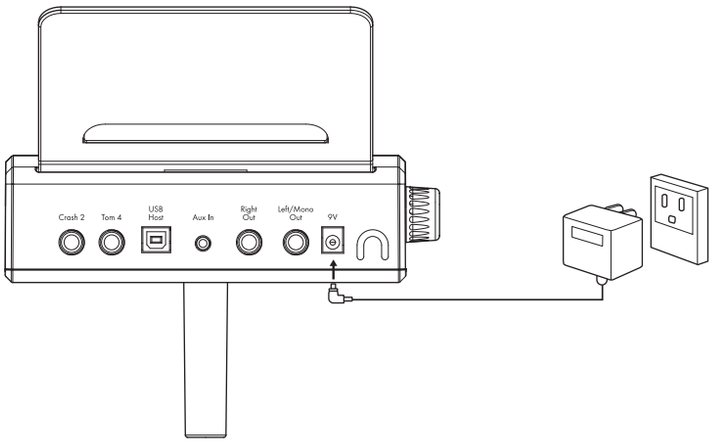

18274587 Simmons SD600 Manual.indd 12 12/19/18 8:51 AM

CONNECTIONS

CONNECTING AUDIO EQUIPMENT

Mixers and Amplifiers

1. To listen to the module, send the outputs to a mixer or amplifier. Connect the Output L/MONO and R jacks on the rear panel to your amp. (For monaural playback, use the L/MONO jack; for stereo playback, connect both L/MONO and R jacks.)

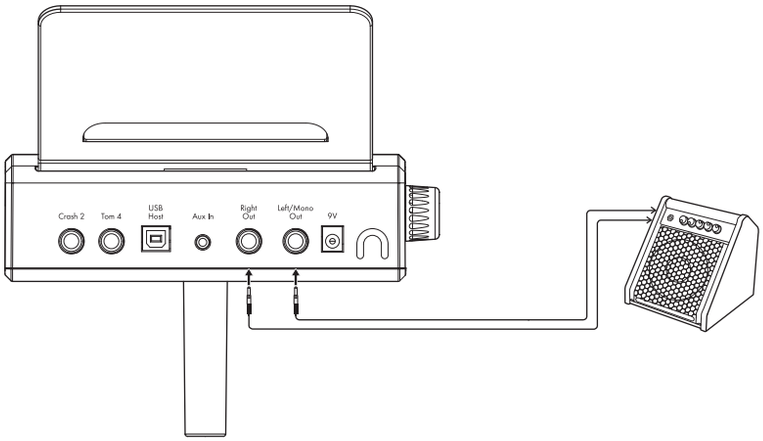

2. The volume from the module is adjusted with the VOLUME knob.

3. You can connect a standard pair of headphones the SD600 module to listen to your electronic drum set without disturbing others. Connect the headphones to the 1/8" headphone jack located on the side panel of the drum module. Adjust the volume to a comfortable level to avoid damaging your hearing..

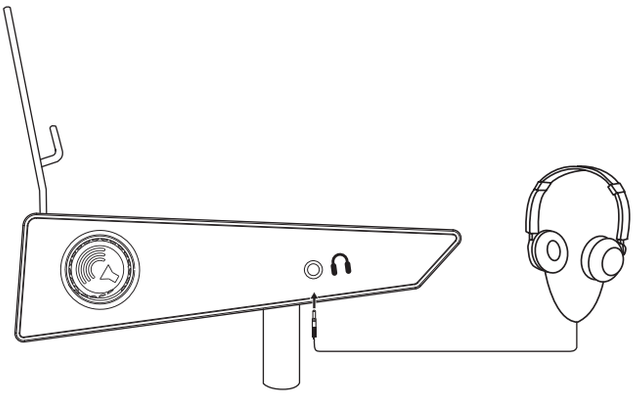

18274587 Simmons SD600 Manual.indd 13 12/19/18 8:51 AM

CONNECTIONS

AUX INPUT
This input allows you to mix the input from external audio sources with the SD600 module's internal sounds.

1. Plug the audio output of your smartphone, MP3 player, or other audio source into the AUX IN jack on the back panel.

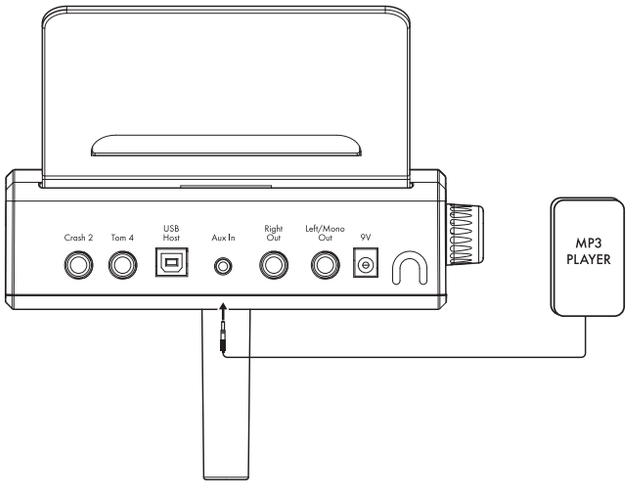

CONNECTING MIDI DEVICES AND COMPUTERS
MIDI stands for Musical Instrument Digital Interface, which is a world-wide standard communication interface that enables electronic musical instruments and computers (of all brands) to communicate with each other. MIDI sends note and other communication between devices. This exchange of information makes it possible to create a system of MIDI instruments and devices that offer greater versatility and control than is available with isolated instruments. Whether you interface with computers, sequencers, expanders or other controllers, your musical horizons will be greatly enhanced.

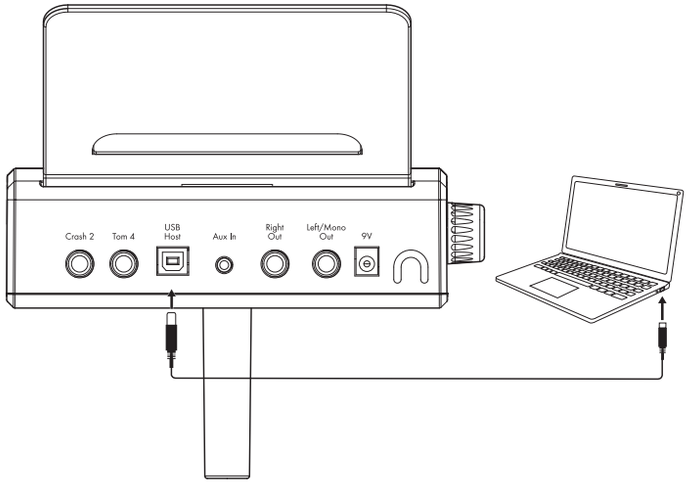

BLUETOOTH WIRELESS MIDI
The SD600 includes Bluetooth wireless MIDI for connection to apps like the Simmons Drums App for iOS. See page 25 for connection instructions.

USB MIDI CONNECTION
The USB connector allows you to connect the module directly to your computer. It can be connected without driver installation under the Windows & macOS environment. The module will be recognized to receive and transmit MIDI messages through a single USB cable, USB is used only for MIDI messages (MIDI via USB). The SD600 module will appear as "SD600" in the USB device options of your software.

NOTE: *When the USB is connected to a computer, all MIDI messages will be received and transmitted via USB.*

18274587 Simmons SD600 Manual.indd 14 12/19/18 8:51 AM

SD600 DRUM MODULE OPERATION

TOP PANEL

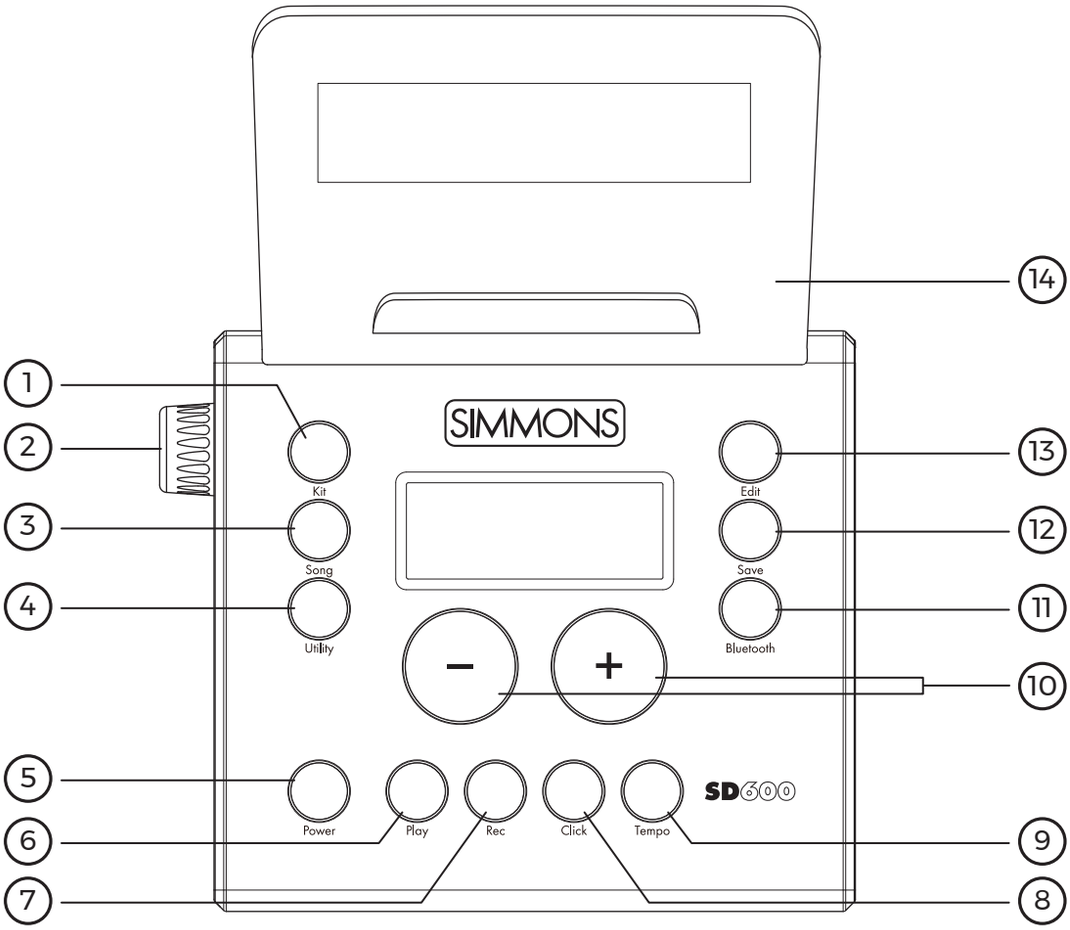

① **Kit Button**

② **Volume Knob**

③ **Song Button**
Access Song Mode

④ **Utility Button**
Access Utility Functions

⑤ **Power**
This is a soft switch. To turn on or off, press and hold the button for 5 secs.

⑥ **Play Button**
Starts or stops the playback of a song

⑦ **Record Button**
Used to enter the Record mode

⑧ **Click Button**
Turns the Click/Metronome function on/off

⑨ **Tempo Button**
Adjusts tempo

⑩ **+/- Buttons**
Changes the kit or adjusts the current parameter on the screen

⑪ **Bluetooth**
Enables Bluetooth MIDI pairing

⑫ **Save Button**
Enters the Save menu when it is available

⑬ **Edit Button**
Enters Edit Mode on kits and Songs. When in Edit or Utility mode, pages through the available settings.

⑭ **Accessory Shelf**
Attach the shelf to the top of the module to hold tablet, smartphone, drumsticks, or other accessories. Make sure your devices are secure before playing the kit.

18274587 Simmons SD600 Manual.indd 15 12/19/18 8:51 AM

SD600 DRUM MODULE OPERATION

BOTTOM PANEL

1. **Serial Connection Jack for the pad trigger cables**

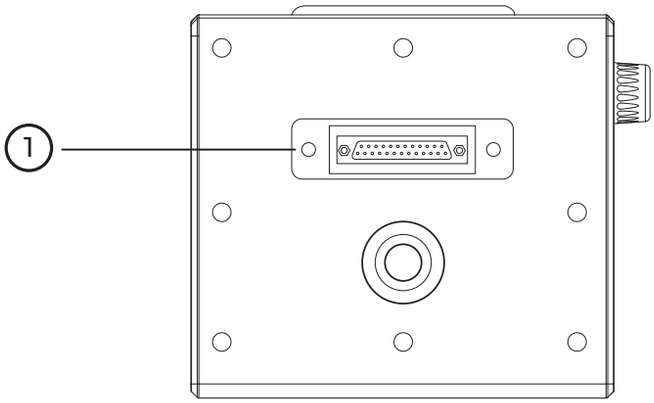

BACK PANEL

1. **Crash 2 / Tom 4**
   ¼" pad inputs for expanding your kits by connecting extra pads or triggers

2. **USB Port**
   Used for connecting the SD600 module to a computer

3. **AUX Input**
   Stereo 1/8" jack to connect CD or MP3 players to the module.

4. **Output**
   Mono or stereo audio outputs to connect to external audio sources

5. **AC Adapter Input**
   Connection for the 9V DC power adapter

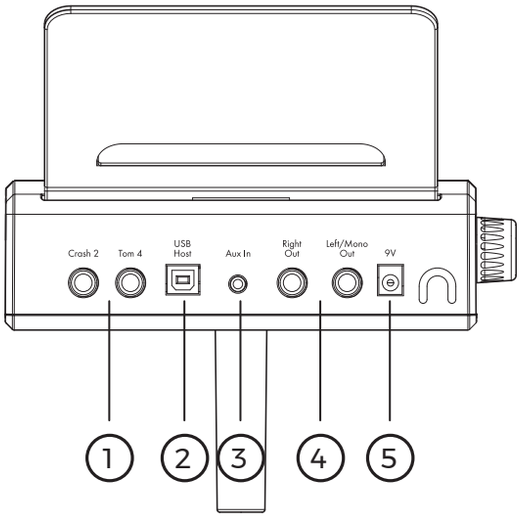

SIDE PANEL

1. **Volume Knob**
2. **1/8" TRS headphone jack**

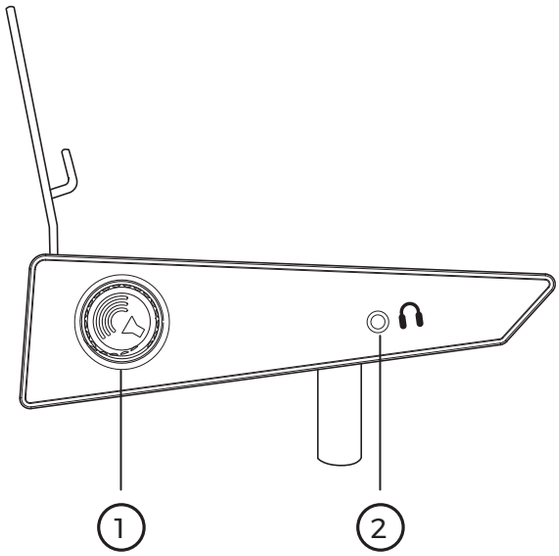

18274587 Simmons SD600 Manual.indd 16 12/19/18 8:51 AM

QUICK START OPERATIONS

TURNING THE POWER ON THE MODULE

1. Connect the AC Adapter to the drum module.
2. Press the power switch on the top panel to turn on the module.

NOTE: *There is an automatic power off function that turns off the module when the kit is not being used for a certain period of time. The default setting is off. If this gets changed you can reset this in the Utility mode.*

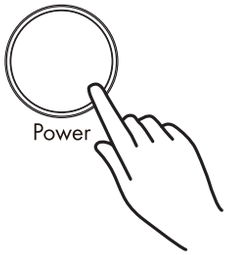


```
Kit 01:
Modern Maple
```

BASIC OPERATION AND NAVIGATION

There are 3 main modes for the module: KIT, SONG and UTILITY. To enter these modes press the corresponding buttons on the top panel of the module.

ADJUSTING VALUES

1. Select the parameter to be adjusted.
2. Adjust the value using + / - buttons.

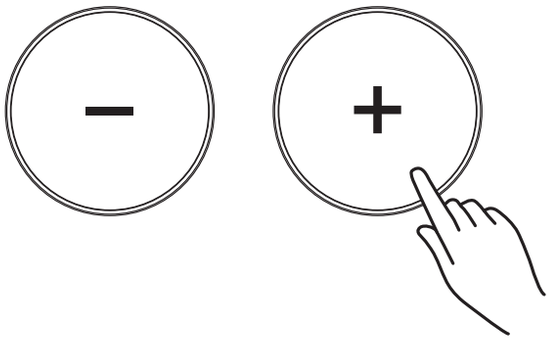

18274587 Simmons SD600 Manual.indd 17 12/19/18 8:51 AM

QUICK START OPERATIONS

LISTENING TO THE DEMO SONGS

The demo songs help to show you the capabilities and sounds of the SD600 module. There are three demos in the module. You can also access these by pressing the SONG button and selecting one of the first three songs.

1. Press KIT and SONG button simultaneously to enter Demo Mode. The first song demo will start playing.
2. Press the PLAY button to stop the demo.
3. Press the + or - buttons to select a Demo to play; use the PLAY button to play the demos
4. After pressing PLAY, press any of the Mode buttons (KIT, SONG or UTILITY) to exit the Demo Mode

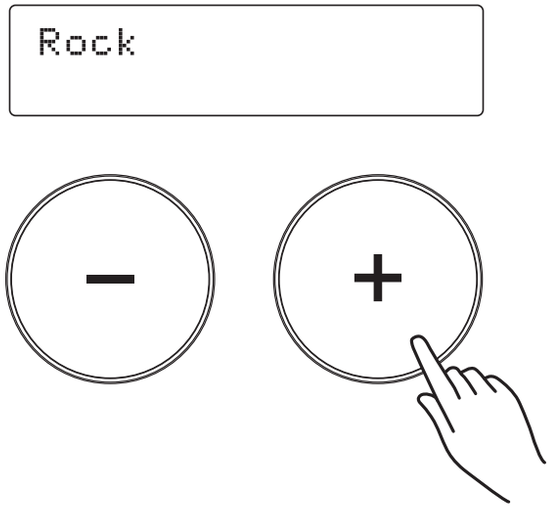

SELECTING A KIT

1. Press the KIT button. The LCD displays the current Kit number and Kit name.
2. Press the – /+ buttons (Preset or User Kits).

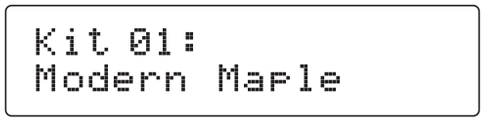

PLAYING A SONG

1. Press the SONG button and the SONG screen appears with the Song Number and Name.
2. Press the –/+ buttons to select the song you want to play.

NOTE: *You can temporarily change the tempo of a song while playback is in progress. The song returns to its preset tempo when a different song is selected.*

MUTING THE DRUM PART

1. While a Song is playing press the PLAY and CLICK Button at the same time. This will mute the drum sound. The screen will show the mute status "Mute On" or "Mute Off"
2. To unmute the Drums press the PLAY and CLICK Buttons at the same time again.

18274587 Simmons SD600 Manual.indd 18 12/19/18 8:51 AM

KIT MODE - ADVANCED

EDITING A KIT

1. Press the KIT button.
2. Press the EDIT button to see the screen for the current sound
3. Strike a drum pad to view the Voice currently assigned
4. Press the EDIT button to move to the first parameter to be changed on the current sound. Press the EDIT button repeatedly to step through all the available parameters that can be changed on the voice.
5. Press the -/+ buttons to change the parameter
6. Press the SAVE button to save the assignment to a User Kit. (See Saving a kit)

Parameter	Definition	Notes
EditSnd	Drum assignment	Press +/- to select a bank of sounds, then press EDIT again to cursor to the sound list.
Volume	Drum volume	Range is 0-32
Pitch	Drum Pitch	Range is -8 to +8
V-Pitch	Velocity to pitch	Range is 0, 0.25, 0.5, 0.75, 1 to 12. Fractional amounts can reduce a machine-gunning effect.
Decay	Drum Decay time	Range is 0 to -5. Reducing the decay time makes the drum ring out for a shorter time.
Pan	Drum Pan	Pan each drum from Left8 to Center to Right8.
R.LVL	Reverb Level	The reverb send for each drum. Range is 0 to 32.
C.LVL	Chorus Level	The chorus amount for each drum. Range is 0 to 32.
Reverb	Reverb Type	The reverb type for this kit. Options are: Hall 1/2, Room 1/2/3, Stage 1/2, Plate, Delay, Echo, Off
Chorus	Chorus Type	The chorus type for this kit. Options are: Chorus 1/2/3/4, Feedback Echo, Flanger 1/2/3, Short Delay, Delay Feedback, Celeste 1/2/3
Factory Reset	Factory Reset	Resets this kit to the default settings. See page 20, “Kit Reset”

18274587 Simmons SD600 Manual.indd 19 12/19/18 8:51 AM

KIT MODE - ADVANCED

RENAMING A KIT

1. Select a User Kit.(Preset Kits cannot not be renamed)
2. Press the -/+ buttons to choose the User kit for save.
3. Press the SAVE button to rename the User Kit.
4. Press the EDIT button to move the cursor
5. Press [+/-] to change the character
6. Press the SAVE confirmation

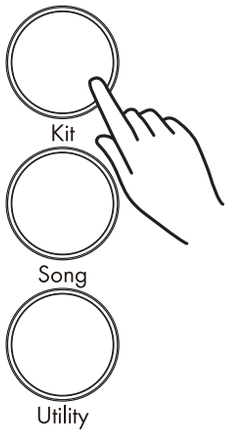

SAVING A KIT

1. Press the SAVE button to save the assignment to a User Kit.
2. Press the -/+ buttons to choose the User kit for save.
3. Press the SAVE button to rename the User Kit.
4. Press the EDIT button to move the cursor to name your Kit.
5. Press [+/-] to change the character
6. Press the SAVE/ENTER confirmation

Sav:User Kit 01

KIT RESET

1. Select a Kit
2. Press the EDIT Button until you see Factory Reset.
3. Press the Save Button. The screen will show "Current Kit"
4. Press Save to reset just the one kit. If you want to reset all the kits go to the next step.
5. Press the + button. The screen will show "All Kits".
6. Press Save.

Factory Reset

18274587 Simmons SD600 Manual.indd 20 12/19/18 8:51 AM

SONG MODE

PLAYING A SONG

1. Press SONG, select a song number, then PLAY to play a song.
2. Press the PLAY button to stop playback of the song.

NOTE: *You can temporarily change the tempo of a song while playback is in progress. The song returns to its preset tempo when a different song is selected.*

Song 01

MUTING THE DRUM PART

1. While a Song is playing press the PLAY and CLICK Button at the same time. This will mute the drum sound. The screen will show the mute status “Mute On” or “Mute Off”
2. To unmute the Drums press the PLAY and CLICK Buttons at the same time again.
3. The default setting is to mute the drum sound. It also mutes the accompaniments track. See P.21 “Mute Select”

EDITING A SONG

1. Press the SONG Button. The current song will be displayed.
2. If you wish to change to another song press the -/+ buttons until you get to the Song you want to edit.
3. From the Song you have selected press the EDIT button. The first selection is the song’s Tempo.
4. Press the -/+ buttons to set the value for the tempo. To move to the next parameter press the EDIT button. Each time you press the EDIT button you will come to the next parameter. See the list below of the parameters for Songs.

- Tempo
- Loop
- Pre Count
- Balance
- Time Sig

Song 01

COPY SONG

You can copy a Preset song to a user song, then erase the Drums or Accompaniment track.

1. Select a Song.
2. Press the SAVE button to save the to a User song
3. Press the -/+ buttons to choose the User song to save to
4. Press the SAVE button to rename the User song.
5. Press the EDIT button to move the cursor
6. Press [+/-] to change the character
7. Press the SAVE button one more time to save the song to a user location.

If you want to rename a user song, save the song to the same position, then use the rename instructions.

Sav:User Sng 01

18274587 Simmons SD600 Manual.indd 21 12/19/18 8:51 AM

RECORDING A SONG

TO RECORD

1. Press the Song Button
2. Select a User Song
3. Press the Record button. You will hear the Click metronome sound count in. Begin playing the song after the count off.
4. After you record your song you can also rename the song, Press SAVE button to save and rename.

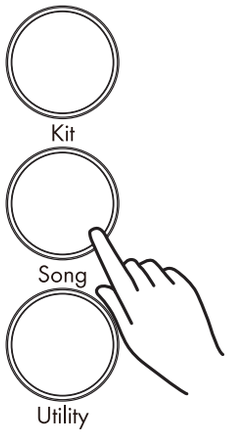

CLICK SETTINGS

The CLICK is the metronome sound that is played when you are listening to beat to play along with.
Press CLICK button on/off metronome.

1. To edit the Click settings press and hold the CLICK button for 2 seconds, then press the EDIT button.
2. The first parameter is the time signature- "Time Sig".
3. Press the -/+ buttons to select the time signature that you want.
4. To get to the next parameter press the EDIT button. See the list below of the parameters for the Click.

```
EditSong:
Time Sig: 4/4
```

Definitions

Time Signature Time Signature - For the preset songs, this parameter shows the current song's default value. For the user songs that have material already recording on them the default value is 4/4
Interval This refers to the note value interval for the click. Ex. quarter note, eighth note etc.
Click Voice This refers to the sound for the Click. There are three options.
Click Vol Click Volume from 0 to 32.
Reset Resets the Click to the factory setup. Press Save to reset the click settings.

18274587 Simmons SD600 Manual.indd 22 12/19/18 8:51 AM

UTILITY MODE

The Utility mode is for the main functions of the module such as trigger setup for the pads, MIDI setup, and saving global settings.

```
Util:Sensitive
Snare:  15
```

Trigger Settings
You can set the parameters of each drum and cymbals pad in the Trigger menu. While editing the settings, you can select each trigger by hitting the corresponding trigger pad.

1. Press the UTILITY button.
2. The display will show the setting for the current trigger pad. The default is the Snare pad center Sensitivity.
3. Strike the drum pad you want to edit to view the setting currently assigned
4. Press the -/+ buttons to change the parameter setting.
5. To get to the next parameter press the EDIT button. See the list below for the other parameters and explanations.

Parameter Definitions:

Sensitivity This adjusts the sensitivity of the pad response. Higher settings result in higher sensitivity, so that the pad will produce a loud volume even when struck softly. Having the sensitivity set too high can affect the dynamics of the pad.
Retrig-C (Retrigger cancel) Retrigger Cancel prevents retriggering from occurring. Although setting this to a high value prevents retriggering, it then becomes easy for sounds to be omitted when the drums played fast (roll etc.). Set this to the lowest value possible while still ensuring that there is no retriggering.
Threshold This setting allows a trigger signal to be received only when the pad is struck harder than a specified force. This can be used to prevent a pad from sounding in response to peripheral vibrations from another pad.
Curve (Trigger curve) This setting allows you to control the relation between the velocity (striking force) and changes in volume (the dynamic curve.) Adjust this curve until the response feels as natural as possible.
X- Talk (Pad Crosstalk) When two pads are mounted on the same stand, the vibration produced by hitting one pad may trigger the sound from another pad unintentionally (This is called crosstalk.) You can avoid this problem by adjusting Crosstalk Cancel on the pad that is sounding inadvertently. If the value is set too high, then when two pads are played simultaneously, the one that is struck less forcefully will not sound. Be careful when setting this parameter to the minimum value required to prevent crosstalk.

18274587 Simmons SD600 Manual.indd 23 12/19/18 8:51 AM

UTILITY MODE

MIDI NOTE

The SD600 module can send pad strikes as MIDI notes to your computer or tablet. This screen allows you to customize the MIDI note number sent when each pad is struck.

1. Press the UTILITY button. The first parameter is for the trigger settings.
2. Press the EDIT button until you see the screen for MIDI Note
3. Hit the pad that you want to change
4. Press the -/+ buttons to change the note number setting

Consult your software documentation for a list of MIDI note numbers for each drum. The SD600 defaults are shown below:

MIDI Note	Pad
36	Kick
38	Snare – Center
40	Snare – Rim
48	Tom 1
50	Tom 1 Rim
45	Tom 2
47	Tom 2 Rim
43	Tom 3
58	Tom 3 Rim
41	Tom 4
39	Tom 4 Rim
46	Hi Hat- Open
42	Hi Hat – Closed
44	Hi Hat - Pedal
85	Hi Hat - Splash
49	Crash
57	Crash 2
51	Ride

MIDI LOCAL SETTINGS

The SD600 module is a USB MIDI compatible device. There are no special drivers required to use the module with your computer.

MIDI Local Control allows the module to only produce sounds coming from the USB MIDI In. The pads will only send MIDI note commands, which can be useful when connected to a Computer DAW. In this case set the Local to Off. The default setting is set to ON.

To change the Local On/Off.

1. Press the UTILITY button.
2. Press the EDIT button until you see the screen for MIDI "Local Sw"
3. Press the -/+ buttons to change the parameter setting.

```
Util:Local Sw
      On
```


18274587 Simmons SD600 Manual.indd 24 12/19/18 8:51 AM

UTILITY MODE

AUTO POWER MODE
Enable: If you don't use the SD600 for 30 min, the module will automatically shut down.
Disable: The module will not shut down automatically. (Default setting)

FACTORY RESET
There may be occasions where you want the module to return to the factory settings. This function will return the module back to factory setup.

1. Press the UTILITY button.
2. Press the EDIT button until you see the screen for "Util Reset"*
3. Press the SAVE button to reset the module. The module will go through the reset procedure and afterwards return to the Kit mode screen.

* There are two types of resets. Utility reset just resets the module settings. Reset All will reset all the sounds as well as the module settings. (Press EDIT button again to Reset All.)
* You can also reset the module to factory settings by holding + and – while turning the power on.

```
Util Reset
```

TEMPO
To adjust tempo press the TEMPO button. The current tempo will be displayed.

You can adjust the tempo with the -/+ buttons. You can also change the tempo by tapping on the drum pads. To do this press the SAVE/ENTER button. The screen will show "Tap..." to indicate the module can accept your tempo input from the drum pads.

```
EditSong:Tempo
      80
```

BLUETOOTH WIRELESS MIDI
The SD600 includes Bluetooth wireless MIDI for connection to apps like the Simmons Drums App for iOS. To connect the drum module to your tablet, smartphone, or computer:

1. Press the Bluetooth button. If you have not yet paired a device, the LED will flash.
2. Open the Bluetooth MIDI settings in your app and select the SD600.

NOTE: *The SD600 will not show up in the "Bluetooth" device list on your phone. Your app needs to support Bluetooth MIDI to work with the SD600. If the app doesn't support Bluetooth MIDI, you can still use it with a USB adapter*

3. The Bluetooth button LED should stop flashing once it is paired with a device. To disable Bluetooth, press the button again so that the LED switches off. Bluetooth MIDI allows you to connect with drum sound apps on a variety of devices.

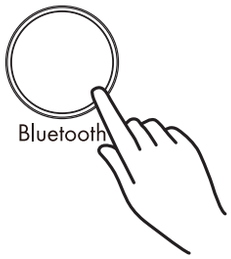

18274587 Simmons SD600 Manual.indd 25 12/19/18 8:51 AM

APPENDIX

Voice List

Bank	Screen Name
Kick	22x18 Map
Kick	20x14 Vntg
Kick	20x14 VnLo
Kick	24x16 '60s
Kick	26x14Acylc
Kick	20x20Bubga
Kick	24x16 KT
Kick	24x16 Nash
Kick	22x18LAFnk
Kick	Hip Hop
Kick	22x14Gated

Snare	14x5 Maple
Snare	13x7 Maple
Snare	14x5 VntMp
Snare	14x5 LAL
Snare	14x5 AlMt
Snare	14x6 Maple
Snare	14x6 Metal
Snare	14x6.5 BB
Snare	14x6.5 BBD
Snare	14x6.5 BM
Snare	PiccUrban
Snare	14x5 Gated
Snare	14x5 GtdHi
Snare	14x5 Mp RS
Snare	13x7 Mp RS
Snare	14x5 VM RS
Snare	14.6 BB RS
Snare	14x5 AM RS
Snare	14x5 AL RS
Snare	14x6 Mp RS
Snare	14x8 AM RS
Snare	14x6 BM RS
Snare	PiccUrb RS

Voice List

Bank	Screen Name
Snare	14x5 GtdRS
Snare	14x5GtRSHi
Snare	14x5 AL CS
Snare	PiccUrb CS

Toms	10" Maple
Toms	10" Bubnga
Toms	10" BubDmp
Toms	10" BubHi
Toms	10" Gated
Toms	10" SnglHd
Toms	12"Acrylic
Toms	12" Maple
Toms	12" Bubnga
Toms	12" BubDmp
Toms	12" SnglHd
Toms	12" Gated
Toms	13" LMplHi
Toms	13" NashHi
Toms	13" VntMpH
Toms	TomRimHi
Toms	13" Nash
Toms	13" Vnt Mp
Toms	13" L Mapl
Toms	TomRimLo
Toms	14" 90sRk H
Toms	14"Acrylic
Toms	14" 90sRk L
Toms	14" Maple
Toms	14" Bubnga
Toms	14" BubDmp
Toms	14" MplLo
Toms	16" VntMpl
Toms	16" L Mpl
Toms	16" Acrylic

18274587 Simmons SD600 Manual.indd 26 12/19/18 8:51 AM

APPENDIX

Voice List

Bank	Screen Name
Toms	16" Gated
Toms	16" VnMpLo
Toms	16" Bubgna
Toms	16" BubDmp
Toms	18" Bubnga
Toms	16" SnglHd
Toms	16" Nash
Toms	18" 90sRk H
Toms	18" 90sRk L
Toms	18"Acrylic
Toms	18" L Mapl
Toms	18" Gated
Toms	18" Nash
Toms	18" SnglHd

Crash	16" P Bow
Crash	16" P Edge
Crash	18" P Chna
Crash	16" P Chna
Crash	16" S Edge
Crash	18" S Bow
Crash	18" S Edge
Crash	18" Z Bow
Crash	18" Z Edge
Crash	10" Z Splh
Crash	8" S Splsh
Crash	16" P MltB
Crash	16" PDk B
Crash	16" PDk E
Crash	16" ZDkE

HiHat	14" S Spls
HiHat	14" M Ped+
HiHat	14" P Clsd
HiHat	14" P Ped

Voice List

Bank	Screen Name
HiHat	14" P Opn
HiHat	14" P sOpn
HiHat	14" S Clsd
HiHat	14" S Ped
HiHat	14" S Opn
HiHat	14" S S Opn
HiHat	14" S spls
HiHat	14" Z Clsd
HiHat	14" Z Ped
HiHat	14" Z sOpn
HiHat	14" Z Opn
HiHat	14" Z spls

Ride	20" SzBrBell
Ride	24" P Bell
Ride	24" P Bow
Ride	20" P Bow
Ride	20" S Bell
Ride	20" S Bow
Ride	20" Z Bell
Ride	20" Z Bow

Perc	Cajon BD
Perc	Cajon DgSl
Perc	Cajon DgSl
Perc	Conga Opn
Perc	Conga Slp
Perc	MaracaShk
Perc	MetalShk
Perc	Cowbell
Perc	Shaker
Perc	Tmbl Hi RS
Perc	TimbaleHi
Perc	Tmbl LoSd
Perc	TimbaleLo

18274587 Simmons SD600 Manual.indd 27 12/19/18 8:51 AM

APPENDIX

Voice List

Bank	Screen Name
Perc	TmbLo Dyn
Perc	Tumba Dyn
Perc	Clave
Perc	Afr Shkr 1
Perc	Bata Ly Lo
Perc	Bata LyDum
Perc	Djembe Dn
Perc	Djembe OS
Perc	Gana Drum
Perc	TDrm Boom
Perc	TDrm SlpBM
Perc	Tdrum Tap
Perc	Udu DumSO
Perc	Udu Dum
Perc	Udu Fngers
Perc	Usu Top
Perc	Apa Kalai 1
Perc	Apa Kalai 2
Perc	IndiaCnt 1
Perc	IndiaCnt 2
Perc	Gadasing 1
Perc	CadasingDb
Perc	India Loop
Perc	Tabla DGC
Perc	Tabla_DGEE
Perc	Tabla_DGMK
Perc	Tabla_DINM
Perc	Tabla_NAH
Perc	Tabla_NAL
Perc	Tabla_THMM
Perc	Finger Cym
Perc	ABS Pipe1
Perc	ABS Pipe 2
Perc	CymbalStak
Perc	Beer Can 1

Voice List

Bank	Screen Name
Perc	Beer Can 2
Perc	Boat Horn
Perc	Chainlink
Perc	Chair 1
Perc	Chair 2
Perc	Group Clap
Perc	Clown Horn
Perc	Dumpster 1
Perc	Dumpster 2
Perc	Dumpster 3
Perc	Bottle 1
Perc	Bottle 2
Perc	Bottle 3
Perc	Metal 1
Perc	Bucket 1
Perc	Bucket 2
Perc	Bucket 3
Perc	Pipes 1
Perc	Pipes 2
Perc	Pipes 3
Perc	Bench 1
Perc	Bench 2
Perc	TrashCan 1
Perc	P Bucket 1
Perc	P Bucket 2
Perc	P Bucket 3
Perc	ShppingCrt
Perc	Dumpster
Perc	DrumSticks
Perc	Go Bell
Perc	Gong
Perc	Tamb Slap
Perc	Timpani
Perc	WoodBlock
Perc	LongZhouGu

18274587 Simmons SD600 Manual.indd 28 12/19/18 8:51 AM

APPENDIX

Voice List

Bank	Screen Name
Perc	BangZi
Perc	MuYu-1
Perc	MuYu-2
Perc	BangZi2
Perc	XiangBan1
Perc	PaiGu-Low
Perc	PaiGu-Med
Perc	PaiGu-Hi
Perc	XiaoGu2
Perc	XiaoGu3
Perc	PaiGu1
Perc	PaiGu2
Perc	PaiGu3
Perc	PaiGu4
Perc	XiangJiao1
Perc	XiangJiao2
Perc	XiaoTangGu
Perc	Daluo-Med
Perc	ZG DaBo-Lo
Perc	ZG DaBo-Hi
Perc	ZG XiaoBo
Perc	KaiCha2
Perc	DaBo
Perc	DaLuo2
Perc	XiaoCha1
Perc	XiaoCha2
Perc	JingJuDaLu
Perc	Bo2
Perc	MeiLanFang
Perc	JingJuM
Perc	Huh_Group
E Kick	SDSV Kick
E Kick	SDS7 Kick
E Kick	909 Kick

Voice List

Bank	Screen Name
E Kick	808 Kick 1
E Kick	808 Kick 2
E Kick	Tekno Kick
E Kick	Fuzzy Bass
E Snare	SDS7Snare1
E Snare	SDS7Snare2
E Snare	808 Snare
E Snare	SDSVSnare1
E Snare	SDSVSnare2
E Snare	SDSVSnare3
E Snare	SDSVSnare4
E Snare	78 Snare
E Snare	Tek Snare
E Snare	909 Snare
E Snare	UniVox Sn
E Snare	Hip Hop 1
E Snare	Hip Hop 2
E Snare	909 Sn RS
E Tom	78 Tom Hi
E Tom	78 Tom Mid
E Tom	78 Tom Lo-
E Tom	78 Tom Lo
E Tom	SDS7 Tom 1
E Tom	SDS7 Tom 2
E Tom	SDS7 Tom 3
E Tom	SDS7 Tom 4
E Tom	SDS7 Tom 5
E Tom	SDS7 Tom 6
E Tom	SDS7 Tom 7
E Tom	SDSV Tom 1
E Tom	SDSV Tom 2
E Tom	SDSV Tom 3
E Tom	SDSV Tom 4

18274587 Simmons SD600 Manual.indd 29 12/19/18 8:51 AM

APPENDIX

Voice List

Bank	Screen Name
E Tom	SDSV Tom 5
E Tom	SDSV Tom 6
E Tom	SDSV Tom 7
E Tom	SDSV Tom 8
E Tom	SDSV Tom 9
E Tom	SDSV Tom 10
E Tom	SDSV Tom 11
E Tom	Tekno Tom1
E Tom	Tekno Tom2
E Tom	Tekno Tom3
E Tom	808 Tom Hi
E Tom	808 Tom Mid
E Tom	808 Tom Lo
E Tom	909 Tom Mid
E Tom	909 Tom Hi
E Tom	909 Tom Lo
E Tom	Tek Tom Hi

E Perc	808 HHCld
E Perc	808 HHOpn
E Perc	SDSV HHPed
E Perc	SDSV HHOpn
E Perc	SDSV HHCld
E Perc	HipHop Cl
E Perc	HipHop Op
E Perc	R'nB Clsd
E Perc	E Hi Hat
E Perc	SDS7 HHCld
E Perc	SDS7 HHOpn
E Perc	SDS7 HHPd1
E Perc	SDS7 HHPd2
E Perc	Tek HH Cld
E Perc	Tek HH Opn
E Perc	SDS7 Crash
E Perc	78 Crash

Voice List

Bank	Screen Name
E Perc	808 Crash
E Perc	SDS7 Cymb
E Perc	SDSV Cym 1
E Perc	SDSV Cym 2
E Perc	SDSV Cym 3
E Perc	E Cymbal 1
E Perc	E Cymbal 2
E Perc	909 Ride
E Perc	808 Cymb
E Perc	909 Crash
E Perc	SDSV Clap
E Perc	78 Tamb
E Perc	909 Clap
E Perc	HumanGltz
E Perc	SteelPkr
E Perc	SteelSwarm
E Perc	TerrorStke
E Perc	NastyKick
E Perc	EatBrain
E Perc	GravelBub
E Perc	Pic Animal
E Perc	HH Bubb
E Perc	DstortRngr
E Perc	BassRatle
E Perc	BassRatMid
E Perc	BassRatLo
E Perc	SSRattle
E Perc	Club Stab
E Perc	KnarlBass
E Perc	Trumble
E Perc	MatrixGens

18274587 Simmons SD600 Manual.indd 30 12/19/18 8:51 AM

APPENDIX

Kit List

#	Kit Name
1	Modern Maple
2	Acrylic
3	Fusion
4	Classic Rock
5	Funk Rock
6	70's Rock
7	Gated Dreams
8	Jazz
9	Grunge Kit
10	Bubinga
11	SDSV
12	Bubinga Africa
13	Nashville
14	West Africa
15	Nails
16	India
17	Blues
18	Tekno
19	Junkyard
20	Modern Pop
21	SDS7 Analog
22	Salsa
23	Heavy Rock
24	Rock Fusion
25	Hip Hop
26	Street Beat
27	80s Rocker
28	Funk City
29	Tribal
30	Punk Kit
31	Dance Kit
32	Chinese Dawn
33	Alternative Rock
34	Heart of China

Kit List

#	Kit Name
35	Pop Life
36	User Kit 1
37	User Kit 2
38	User Kit 3
39	User Kit 4
40	User Kit 5
41	User Kit 6
42	User Kit 7
43	User Kit 8
44	User Kit 9
45	User Kit 10

Songs

	Display Name
Song 01	Rock
Song 02	Funk
Song 03	Fusion
Song 04	User Sng 1
Song 05	User Sng 2
Song 06	User Sng 3
Song 07	User Sng 4
Song 08	User Sng 5
Song 09	User Sng 6
Song 10	User Sng 7
Song 11	User Sng 8
Song 12	User Sng 9
Song 13	User Sng 10

18274587 Simmons SD600 Manual.indd 31 12/19/18 8:51 AM

APPENDIX

MIDI Implementation Chart

Function	Transmitted	Recognized	Remarks
Basic Default	10 CH Only	1-16 CH	
Channel Changed	X	1-16 CH	
Mode Default	Mode 3	Mode 3	
Messages	X	X	
Altered	**********	X	
Note	0~127	0~127	
Number: True voice	**********	0~127	
Velocity Note ON	O 9nH,v=1-127	O 9nH,v=1-127	
Note OFF	O 8nH,v=0	O 9nH,v=0 or 8nh	
Affter Key's	X	X	
Pitch Bender	X	O	
Control Change 0, 32	X	O	Bank Select
1	X	O	Modulation
6	X	O	Data Entry
7	X	O	Volume
10	X	O	Pan
11	X	O	Expression
64	X	O	Sustain
66	X	O	Sostenuto
67	X	O	Soft pedal
80, 81	X	O	DSP TYPE
84	X	O	Portamento
91, 93	X	O	DSP DEPTH
100, 101	X	O (*1)	RPN LSB,MSB
121	X	O	Reset all Controllers
Program Change: True	O 0-127	O 0-127	
	0-127	0-127	
System Exclusive	X	O	
System: Song Position	X	X	
Song Select	X	X	
Common: Tune	X	X	
Aux: Local on/off	X	O	
All Notes Off	X	O	
Messages: Active Sense	X	X	
Reset	X	X	

Mode 1: OMNI ON, POLY
Mode 2: OMNI ON, MONO
Mode 3: OMNI OFF, POLY
Mode 4: OMNI OFF, MONO

*1: Registered parameter number:
#0: Pitch sensivity
#1: Fine tuning in cents
#2: Coarse tuning in half-tones

O: Yes
X: NO

18274587 Simmons SD600 Manual.indd 32 12/19/18 8:51 AM

18274587 Simmons SD600 Manual.indd 33 12/19/18 8:51 AM

18274587 Simmons SD600 Manual.indd 34 12/19/18 8:51 AM

18274587 Simmons SD600 Manual.indd 35 12/19/18 8:51 AM

WARRANTY

Two (2) Years limited warranty
Subject to the limitations set forth below, Simmons® hereby represents and warrants that the components of this product shall be free from defects in workmanship and materials, including implied warranties of merchantability or fitness for a particular purpose, subject to normal use and service, for two (2) years to the original owner from the date of purchase.

Retailer and manufacturer shall not be liable for damages based upon inconvenience, loss of use of product, loss of time, interrupted operation or commercial loss or any other incidental or consequential damages including but not limited to lost profits, downtime, goodwill, damage to or replacement of equipment and property, and any costs of recovering, reprogramming, or reproducing any program or data stored in equipment that is used with Simmons® products. This guarantee gives you specific legal rights. You may have other legal rights which vary from state to state. Some states do not allow limitations on how long an implied warranty lasts, so the above limitation may not apply to you.

Simmons
P.O. Box 5111 Thousand Oaks, CA 91359-5111

All trademarks and registered trademarks mentioned herein are recognized as the property of their respective holders.

FCC STATEMENT

1. Caution: Changes or modifications to this unit not expressly approved by the party responsible for compliance could void the user's authority to operate the equipment.
2. Note: This equipment has been tested and found to comply with the limits for a Class B digital device, pursuant to Part 15 of the FCC Rules. These limits are designed to provide reasonable protection against harmful interference in a residential installation. This equipment generates, uses, and can radiate radio frequency energy and, if not installed and used in accordance with the instructions, may cause harmful interference to radio communications. However, there is no guarantee that interference will not occur in a particular installation. If this equipment does cause harmful interference to radio or television reception, which can be determined by turning the equipment off and on, the user is encouraged to try to correct the interference by one or more of the following measures:

- Reorient or relocate the receiving antenna.
- Increase the separation between the equipment and receiver.
- Connect the equipment into an outlet on a circuit different from that to which the receiver is connected.
- Consult the dealer or an experienced radio/TV technician for help.

This equipment complies with FCCradiation exposure limits set forth for an uncontrolled environment. This equipment should be installed and operated with minimum distance 20cm between the radiator and your body.

18274587 Simmons SD600 Manual.indd 36 12/19/18 8:51 AM