I·D·X

CAM～WAVE HD

CW-F25

Instruction Manual

for United States

IDX Company, Ltd.

IDX thanks you for choosing the CW-F25 and is sure that you will benefit from its unique features.
Please read this instruction manual to safely operate and to maximize performance.

- The material contained in this manual consists of information that is the property of IDX Company, Ltd. and is intended solely for the use by the purchasers of the equipment described in this manual.
- IDX Company, Ltd. prohibits the duplication of any portion of this manual or the use herein for any application other that the operation or maintenance of the equipment described in this manual without the expressed written permission of IDX Company, Ltd.

■ FCC notice

FCC conditions

This device complies with part 15 of the FCC Rules. Operation is subject to the following two conditions:

1. This device may not cause harmful interference.
2. This device must accept any interference received, including interference that may cause undesired operation.
3. This equipment must be installed and operated in accordance with provided instructions and the antenna(s) used for this transmitter must be installed to provide a separation distance of at least 20 cm from all persons.

■ EU Conformity Statement

This product and the supplied accessories (if applicable) are marked with "CE" and comply therefore with the applicable harmonized European standards listed under the R&TTE Directive 1999/5/EC and the Low Voltage Directive 2006/95/EC.

Responsible for CE-marking:

IDX Technology Europe, Ltd.
Unit9, Langley Park, Waterside Drive, Langley,
Berkshire SL3 6AD England
Tel: +44 1753 547692

Manufacture:

IDX Company, Ltd.
6-28-11 Shukugawara, Tama-ku, Kawasaki-shi, Kanagawa-ken
214-0021 Japan

Contents

I. Introduction 4
1. Product overview 4
2. Safety Notes 6
3. Notes of the radio waves 9
4. Packing list 11
5. Names of parts 12
6. Optional accessories 16
II. Preparation 17
1. Installation of optional plates 17
2. Installation of antenna 20
3. Preparing for power supply 23
4. Menu setting 25
III. Operation of CW-F25 30
1. Basics 30
2. Return video 32
3. IP camera setup - wireless LAN bridge - 34
4. Intercom operation 36
5. GPI connection - as tally 38
6. RS-422 remote 41
IV. Useful information 43
1. Troubleshooting 43
2. Revert to default settings 49
3. Firmware update 49
V. References 51
1. List of setup menus - Rule 51
2. Setup menus - Transmitter 52
3. Setup menus - Receiver 60
4. Status LED 68
5. Specification 69
6. Connector and pin assignment 75
7. Index 76
VI. Warranty & Service 81
1. Product warranty 81
2. About exemptions 81
3. Support & Service contact 82

I. Introduction

1. Product overview

CW-F25 is a wireless video transmission system which enable to transmit the downlink and uplink[1] video, audio and various data. Based on IEEE 802.11n Wireless LAN technology with newly developed 4x4 MIMO and beam-forming technology, CW-F25 enable to transmit H.264 high profile signal up to 25Mbps.

- High-quality video
  CW-F25 supports HD-SDI&3G-SDI and full HD video - up to 1920x1080 resolution. A system utilized H.264 high profile compression and supports up to 25Mbps.

- Adaptive variable-bit rate control
  CW-F25 has an adaptive variable-bit rate control function to prevent sudden disconnection of video and audio link due to the distance between the transmitter and receiver and/or the deterioration of radio waves caused by the obstacles, weather condition and so on. To minimize an unexpected shout down of the link, CW-F25 has a function to reduce the transmission video bit rate automatically. Operator can be selected a sufficient bit rate from auto or manual by menu setting.

- Optional 18dBi High-Gain 4x4 MIMO antenna array (A-4XANT)
  When set the antenna array on both transmitter and the receiver, a transmission distance can be extended up to 2Km/1.2miles LOS.

- Bidirectional signal and data transmission
  CW-F25 is not a ordinal downlink video transmission system but supports variety of bidirectional signal and data such as return video, intercom, tally and RS-422 remote.

---

[1] In this manual, the video that transmitted from a transmitter to a receiver referred as "downlink video" and the video that transmitted from receiver to transmitter referred as "return video".

- Wireless LAN bridge

  CW-F25 has Ethernet I/O equipped. This performs as a wireless LAN bridge therefore it is possible to connect the IP camera, remote controller, etc.. Also this Ethernet can simultaneously operate together with SDI video.

- DFS - Dynamic Frequency Selection

  CW-F25 has a DFS function built-in which detect the weather radar and avoid a confliction with such an official radio waves. With DFS functionality, CW-F25 can be freely used in indoor and/or outdoor without violating local law.

2. Safety Notes

Prior to using this product, please study and follow the instruction carefully and advice outlined in this manual in order to use this product safely and correctly. After reading, please keep it in a convenient place for future reference. Incorrect usage may lead to injury, fire, electric shock and product failure.

■ Explanation of displays

	This display shows "mishandling may cause death or serious injury[*1].
	This display shows "mishandling may cause injury[*2], or physical-loss-or-damage[*3] is possible."

Warning

Cautions

*1 A serious injury means the loss of sight and an injury, a burn (high temperature and low temperature), electric shock, fracture, poisoning, etc. requiring medical treatment, hospitalization for treatment.

*2 An Injury means a burn (high temperature and low temperature), an electric shock, etc. in medical treatment but excludes hospitalization and regular hospital attendance for treatment.

*3 Physical loss or damage means damage in connection with a property, household effects, livestock, pets, etc..

■ Explanation of signs

	This display means **prohibited** action (must not be carried out).
	This display shows **instructions** (must be carried out).

Prohibited

Instruction

Warning

If you notice smoke, strange smells, strange noises, or excessive heat coming from this product, stop using it, turn off the power, and unplug the power cable.
Continued use under these conditions may cause a fire, electric shock, or injury.

Be careful not to touch the power supply plug if your hands are wet, and do not pour liquid over it.
It may cause a fire, an electric shock, an injury, or failure.

Do not pour liquid or wet over this product. Do not wet this product.
It may cause a fire, an electric shock, an injury, or failure.

If liquid gets into the interior of this product, turn off the power immediately and pull the power supply plug out of the electrical receptacle.
Continued use may cause a fire, an electric shock, an injury, or failure.

Do not insert or drop foreign substances, such as metal or any combustible material inside this product. If a foreign substance enters, turn the power off immediately and pull the power supply plug out of the electrical receptacle.
Continued use may cause a fire, an electric shock, an injury, or failure.

Do not dismantle or modify this product.
It may cause a fire, an electric shock, an injury, or failure.

Do not damage the power cable by bending it forcefully, using it to carry a heavy item or exposing it to heat.
If the power cord is damaged it may cause a fire, an electric shock, an injury, or failure.

Do not use this product if the power cable is damaged.
It may cause a fire, an electric shock, an injury, or failure.

Insert the plug and connector of the power cable completely.
Failure to insert them completely may cause a fire, electric shock, or injury.

Before using an external power supply, always check that the voltage is within the specified range.
Input voltage out of specification can cause a fire, an electric shock, an injury, or failure.

Before using an external power supply, always check that the polarity of the connector is correct.
Reverse polarity connection can cause a fire, an electric shock, an injury, or failure

Caution

Keep this product away from direct sunlight, high temperatures and high humidity.
It may cause a fire or failure.

Do not use this product in extremely low temperatures or in a place subject to extreme changes in temperature. Keep this product away from places where condensation is likely to occur, and do not use it with condensation forming on it.
It may cause a failure. Use it within the ambient temperature limits 0℃ - 50℃ (32℉ - 138℉), and 20% - 80% humidity.

Keep this product away from dusty conditions and places where the magnetic field is strong.
It may cause a fire or failure.

Do not place this product on an unstable surface, such as a unstable tabletop or uneven surface.
It may collapse and fall, or become unbalanced and fall and cause an injury or failure.

Do not cover the ventilation hole of this product.
If the ventilation hole is plugged, the interior temperature of this product will rise and it may cause a fire or failure.

Do not drop, collision with other hardware or apply a strong shock to this product.
It may cause failure.

Do not place anything on this product.
It may cause failure.

Keep packing materials such as plastic bags out of the reach of children.
Children may choke if they put them in their mouths or over their heads.

Do not use this product if the fan stops.
Doing so may cause a fire or failure. Order a replace service from your retailer.

Keep all cables organized.
People tripping on cables may cause the product to fall or topple over and injure someone. Be careful when connecting and positioning cables.

3. Notes of the radio waves

FCC Statement

This equipment has been tested and found to comply with the limits for a Class B digital device, pursuant to part 15 of the FCC rules. These limits are designed to provide reasonable protection against harmful interference in a residential installation. This equipment generates, uses and can radiate radio frequency energy and, if not installed and used in accordance with the instructions, may cause harmful interference to radio communications. However, there is no guarantee that interference will not occur in a particular installation. If this equipment does cause harmful interference

to radio or television reception, which can be determined by turning the equipment off and on, the user is encouraged to try to correct the interference by one or more of the following measures:

-Reorient or relocate the receiving antenna.

-Increase the separation between the equipment and receiver.

-Connect the equipment into an outlet on a circuit different from that to which the receiver is connected.

-Consult the dealer or an experienced radio/TV technician for help.

To assure continued compliance, any changes or modifications not expressly approved by the party responsible for compliance could void the user's authority to operate this equipment. (Example- use only shielded interface cables when connecting to computer or peripheral devices).

FCC Radiation Exposure Statement

This equipment complies with FCC RF radiation exposure limits set forth for an

uncontrolled environment. This transmitter must not be co-located or operating in conjunction with any other antenna or transmitter.

This equipment complies with Part 15 of the FCC Rules. Operation is subject to the following two conditions:

(1) This device may not cause harmful interference, and

(2) This device must accept any interference received, including interference that may cause undesired operation.

Caution!

The manufacturer is not responsible for any radio or TV interference caused by unauthorized modifications to this equipment. Such modifications could void the user authority to operate the equipment.

4. Packing list

Check the components in the package.

- CW-F25 TX - Transmitter

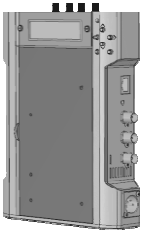

- CW-F25 RX - Receiver

Supplied accessories

- Readme First····· x1

- Standard antenna ····· x8

- Headset ····· x2

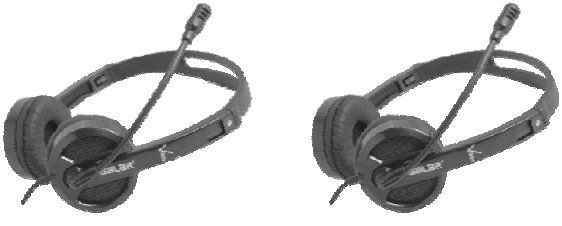

5. Names of parts

1) TX - Transmitter

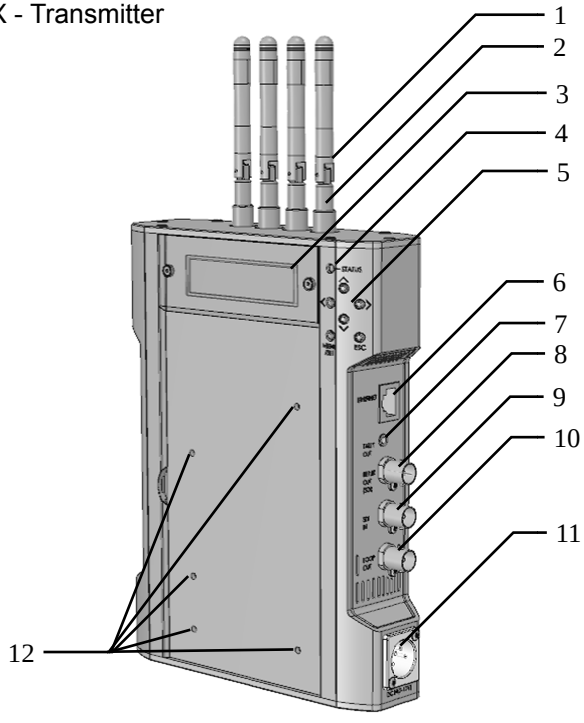

1. Antennas
2. Antenna connector
   RP-SMA x4
3. LCD
   Display the setup menu and status.
4. Status LED
5. Menu setting buttons
   Move cursor: Up, Down, Left, Right
   ENTER, ESC
6. Ethernet connector
7. GPI OUT
   Contact closure output
8. SDI IN
9. SDI THROUGH OUT
10. SDI OUT
11. DC power connector
    XLR-4 male
12. Screw holes for V-Plate

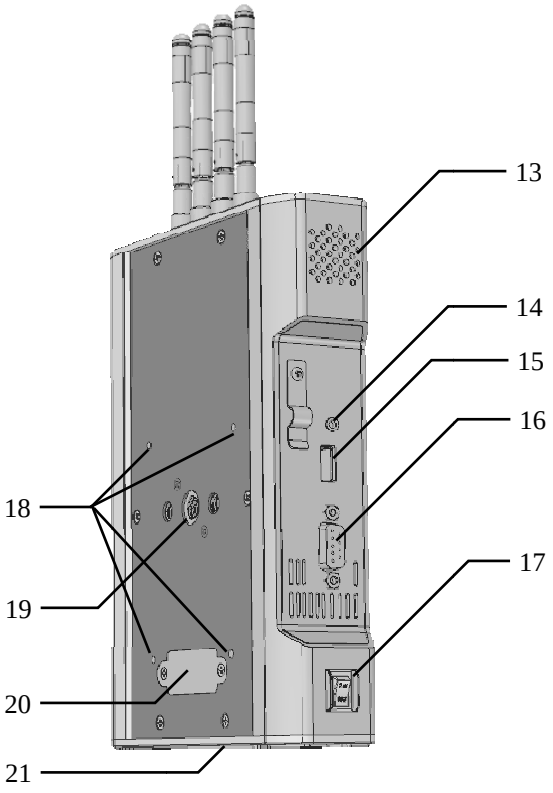

13. Ventilation holes
14. Intercom connector
15. USB connector
16. RS-422 connector
    D-Sub 9pin female
17. Power ON/OFF switch
18. Screw hole for V-Mount adopter plate
19. 3/8 inch screw hole for tripod
20. Power supply terminal in inside for V-Mount adopter plate.
21. 3/8 inch screw hole for tripod (On the bottom)

2) RX - Receiver

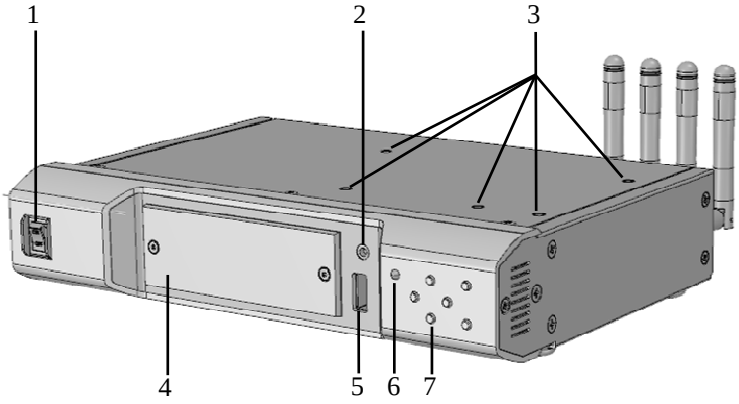

1. Power ON/OFF switch
2. Intercom connector
3. Screw holes for V-Plate.
   mounting screw holes
4. LCD
   Display the setup menu and status.
5. USB connector
6. Status LED
7. Menu setting buttons
   Move cursor: Up, Down, Left, Right
   ENTER, ESC

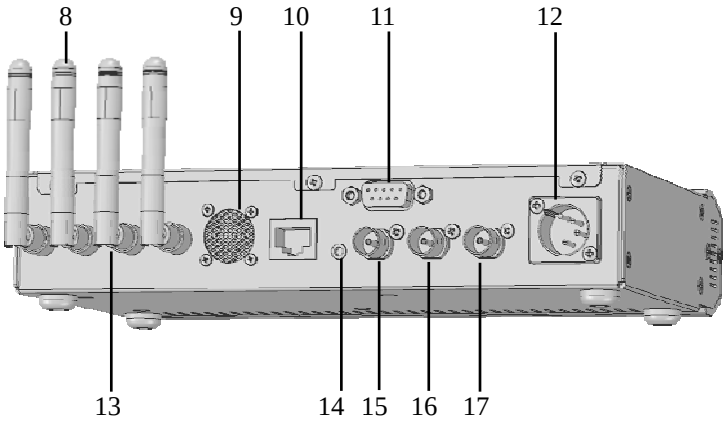

8. Antennas
9. Ventilation holes
10. Ethernet connector
11. RS-422 connector
    D-Sub 9pin female
12. DC power connector
    XLR-4 male
13. Antenna connector
    RP-SMA x4
14. GPI IN
    Contact closure input
15. SDI IN
16. SDI THROUGH OUT
17. SDI OUT

6. Optional accessories

- V-Plate Model# P-V2CL

  This plate can be mount on both TX and RX then supply +14VDC by attaching IDX Endura series Lithium Ion batteries.

- V-Mount Adopter Plate Model# A-MT2V

  This adapter plate is for mounting on the back of the TX then the TX can easily attach onto the back of the camera. By using this plate, the battery or EXT DC power can be supplied to the camera through the multi pin connector on the plate. The power will continue supply to the camera even if the power OFF on TX

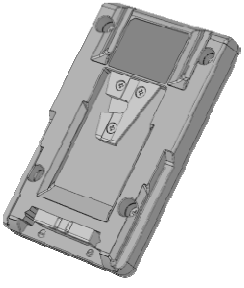

- High-gain 4x4 MIMO Antenna array Model# A-4XANT

  A-4XANT is high-gain (18dBi) directional antenna array.
  Pole mounting bracket and antenna cable (3m x4) included.
  * Please prepare the antenna pole separately.

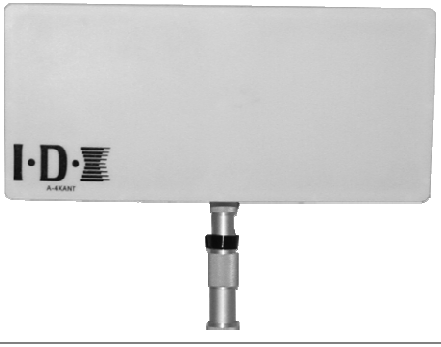

II. Preparation

1. Installation of optional plates

This section describes how to install the V-Plate and V-Mount adopter plate.

1.1. How to install the P-V2CL onto transmitter

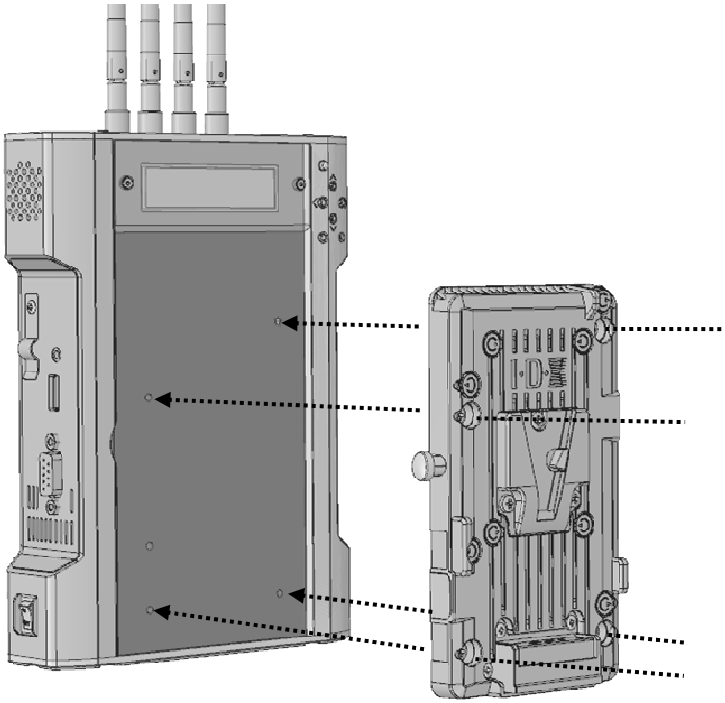

Mount the P-V2CL onto TX by using supplied screws as shown in figure above.

1.1. How to install the A-MT2V onto transmitter

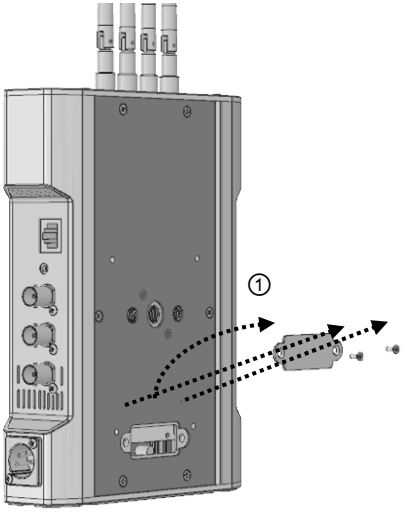

① Unscrew on the back of transmitter then remove the metal cover.

② Pull out the power connector from inside of transmitter and then firmly connect with connector from A-MT2V.

③ Carefully restore the cable and connector to inside of transmitter.

④ After restore the cable and connector, mount the A-MT2V onto transmitter by using supplied screws, To inside of body.

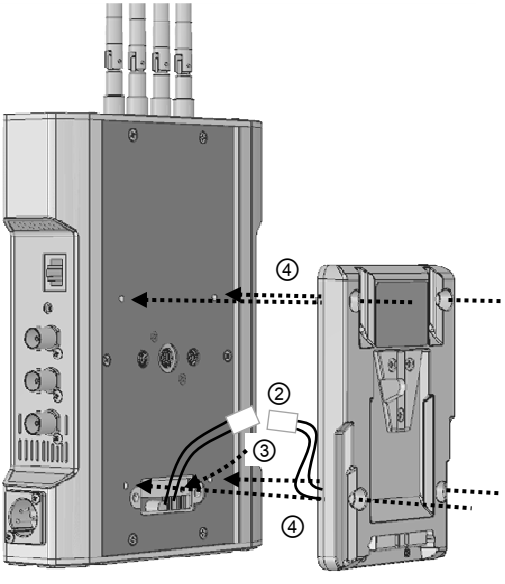

1.2. How to install the P-V2CL onto receiver

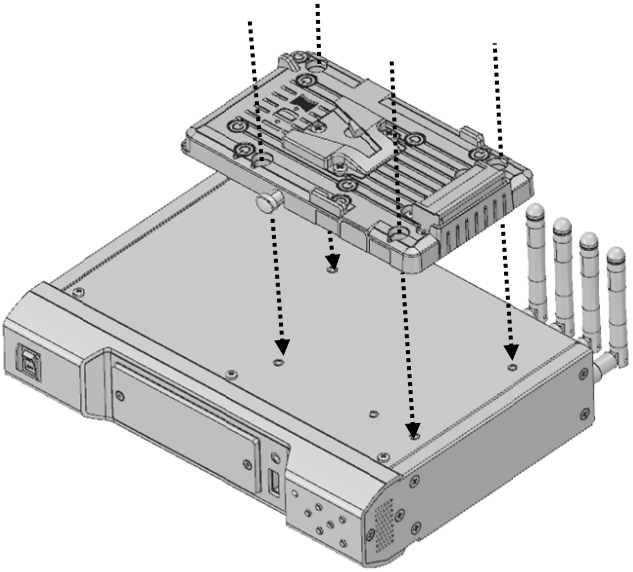

Mount the P-V2CL onto receiver by using supplied screws as shown in figure above.

2. Installation of antenna

2.1. Install the antenna

Transmitter

Attach all four antennas tightly mount in a clockwise direction.

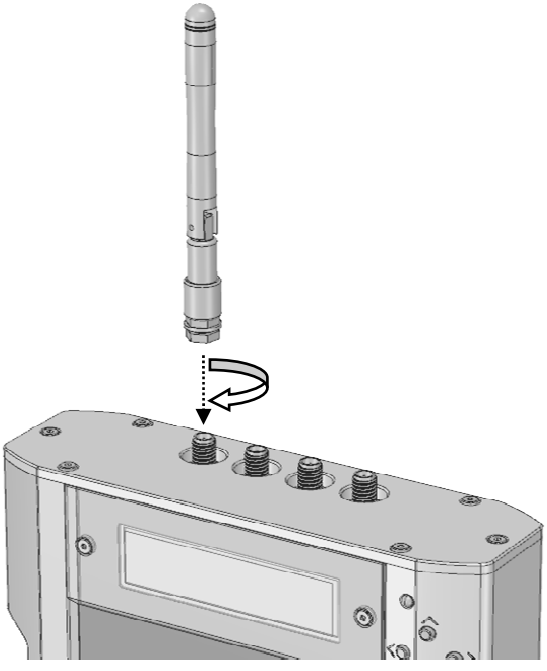

Receiver

Attach all four antennas tightly mount in a clockwise direction.

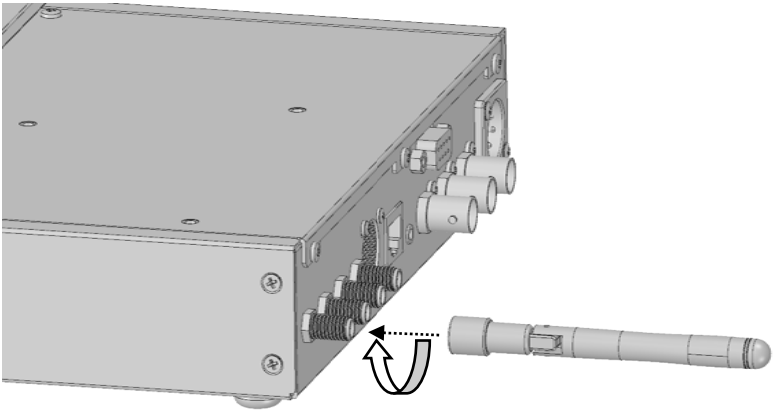

Stand up all the antenna at 90 degree when in operation.

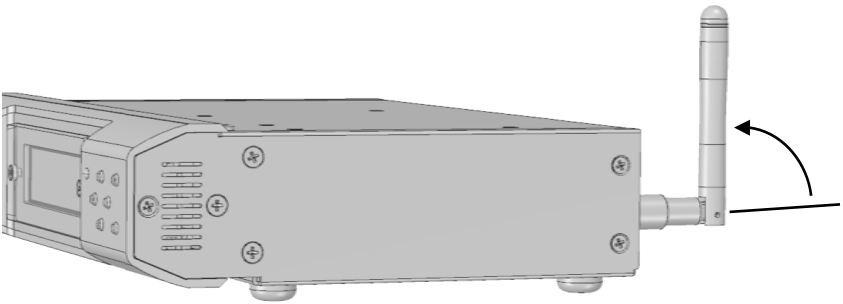

2.2. Install the optional antenna

A-4XANT Packing list

- ✓ Antenna x1
- ✓ Coaxial cable 3m/10 feet x4 (N-plug / RP-SMA plug)
- ✓ Pole mounting bracket x1

Installation

1. Attach the bracket firmly onto the antenna.
2. Mount the antenna to the pole.
3. Connect four N-type connectors to the antenna and another side connect to CW-F25.

Note

- Length of coaxial cable is 3m/10 feet.
  Coaxial cable longer than 3m is not recommended due to attenuation of the signal.

- A-4XANT is a directional antenna.
  Signal strength falls if direction of the antenna surface is displaced,
  then transmission may not be performed properly.
  Directivity of the antenna is as follows

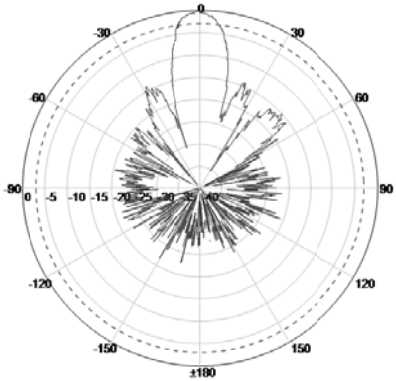

Vertical surface

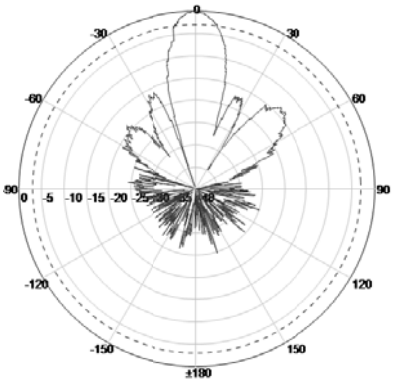

Horizontal surface

3. Preparing for power supply

AC adapter is not included to the package. Recommended power supply for the CW-F25 shown in below.

3.1. Recommended products

- AC adapter IDX IA-60a IA-200a IA-300a AC-100
- Power base station IDX EB-2 EB-4 EB-424L
- Batteries IDX Endura series battery with optional P-V2CL.

3.2. Note

- P-V2CL is an adopter for V-Mount batteries.
- Input voltage range is DC 7V to 17V.
- Power input connecter is Cannon 4-pin male.
- Pin assignment #1: minus (-)
  #4: plus (+)

Caution

✓ Please make sure the input voltage range.
✓ Please be careful not to reverse connection of power supply.
✓ Useable battery is 7.4V lithium-ion battery or 14V lithium-ion battery. 24V battery cannot be used.

3.3. Power on and Power off

1) Connecting the power supply
   Plug the Canon connector to the DC input on TX and RX.
   * Insert tightly until it clicks.

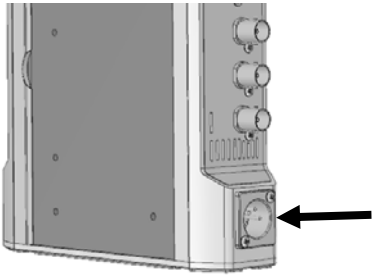

Transmitter right side

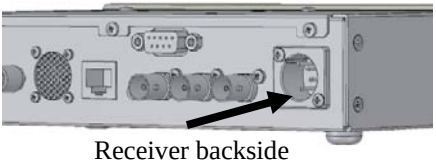

Receiver backside

2) Turn on the power switch

Transmitter left side

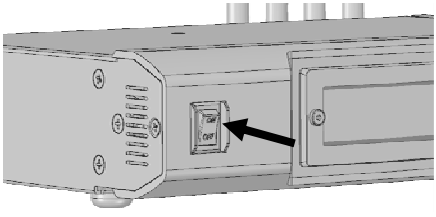

Receiver front

3) LCD backlight will turn on then status LED lights RED.
   LCD will start to display information about 15 seconds later then the status LED will starts flashing GREEN.

4) Turn off the power:
   Turn OFF the power switch then remove the power cable.

4. Menu setting

CW-F25 equipped operation button and LCD for displays current status and for menu setting. This section describes how to operate the button and information that displays on LCD .

4.1. LCD and the push button

LCD displays setup menus and current status.
By pressing ENTER button, display can be changed from current status to menu setting mode. Setup menu is hierarchical thus the role of the ENTER button is to use for item selection and move down to the lower level.
Role of ESC button is moved back to the upper level and it can be returned to the status display on the top. See below.

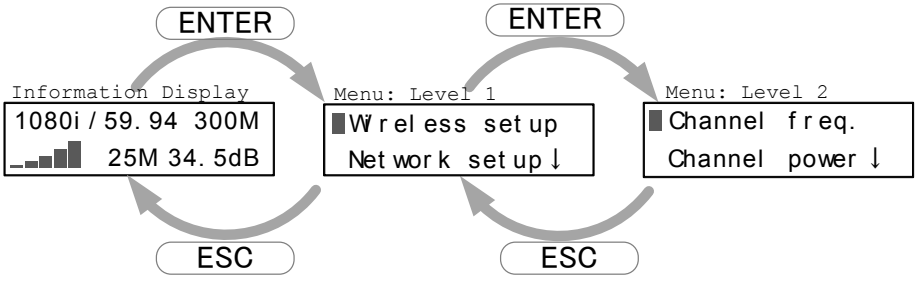

Cursor appears in the menu and move up or down the cursor by using Up or Down button.
(See the right)

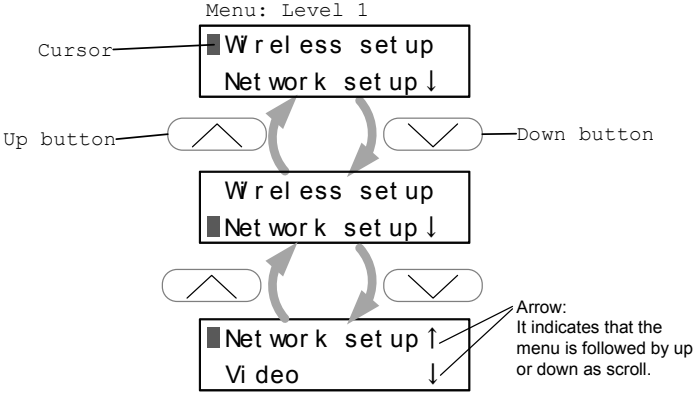

Select the menu by using ENTER button and then move to the lower level. Select the menu by scrolling cursor then move to the setting item by pressing ENTER button. Menu will indicate possible selection in the setup items Move the item by left or right button, then press ENTER for selecting desired item.

ESC means the cancel. If pressed ESC button, it will return to upper level with keeping previously selected item.

Example;
For changing video bit rate, move down the menu hierarchy Video > Video bit rate, then it been changed to 20Mbps from AUTO.

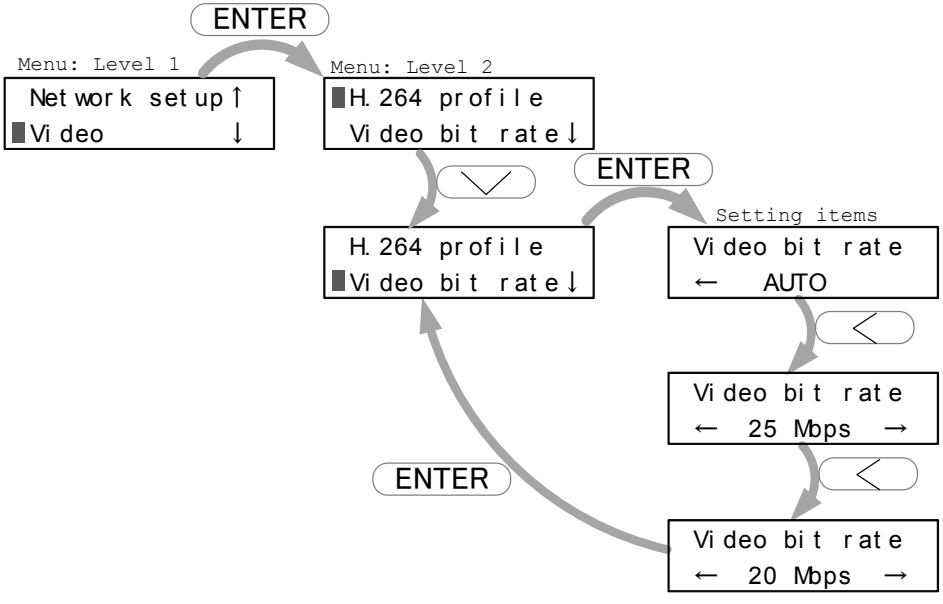

Some of the setting items need to enter a numerical number or alphabet.

To move the cursor to digit by left or right button and then select alphabet by up or down button.
Continue to move the cursor to another digit by left or right button, then please enter all the necessary character. Press ENTER when all the input has been completed.
Press the ESC if you want to cancel the input.

Example;
For changing Network IP address. Network setup > IP address.

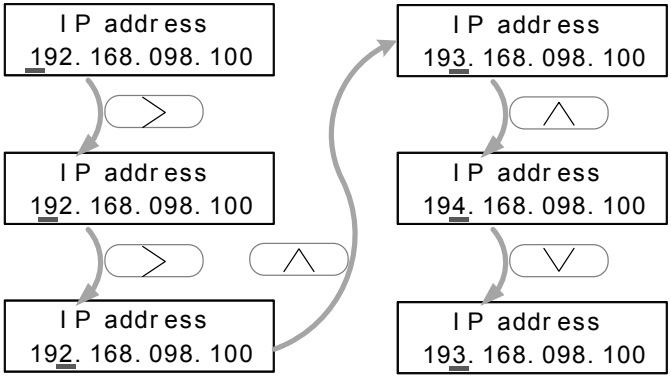

Summarizes the role of the operation button in the table below.

Button	Behavior in the menus	Behavior in the setup items
ENTER	Display the menu. Select menu items down to next level.	Commit for changes.
ESC	Go back to upper level.	Cancel
Up	Move cursor.	Select character.
Down		
Left	-	Move between setting items. Move cursor.
Right		

4.2. Information display

LCD displays a status of the video transmission as shown in below.

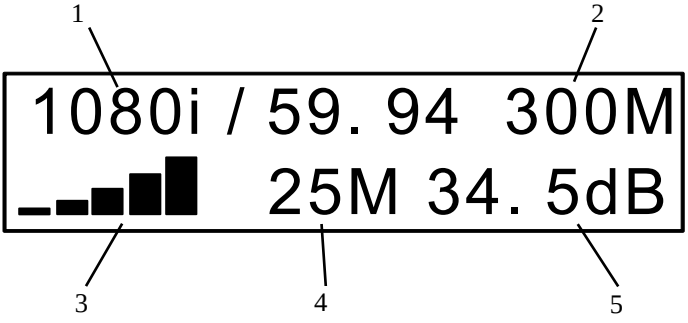

1. Video format
   Display the resolution and frame/field rate of input video.
   Display the "NO_VIDEO_IN" if there is no input signal of SDI.

2. Wireless link speed
   Display the wireless link speed of current connection.
   "300M" indicates that the link speed is 300Mbps and this is a maximum speed of the 802.11n.

3. Received signal strength
   Display in five steps bar the strength of the received signal. The strength of the received signal will display by five steps bar.
   When the number of the bar is greater, it indicate that is in good receiving condition.

4. Video bit rate
   Display a current H.264 video bit rate.
   When the bit rate set to "AUTO" mode, '*' mark will appear in front of the number.. Video bit rate indication will updated accordingly due to the transmission state.

5. SNR (Signal Noise Ratio)
   Display the S/N ratio of receiving radio waves.
   It indicate a good receiving condition if value is greater.

4.3. Default settings

CW-F25 has shipped with default setting that enable for immediate use, however, please be sure to check the frequency every time prior to use.

- Transmitter only - setting the radio frequency
  Please select and set at desired frequency.
  Menu: Wireless setup > Channel freq.

- Other settings may be set as required.

For more information about settings, please refer to P.51 "References".

III. Operation of CW-F25

1. Basics

In this section, it is explained about basic video transmission. Let's transmit downlink video.
For more information about setting, refer to ☞ mark.

1. Install the antennas to transmitter and receiver.
   ☞ P.20 "Installation of antenna"
2. Connection of power supply to transmitter and receiver.
   ☞ P.23 "Preparing for power supply"
3. Connect between camera and transmitter.
   Connect between monitor and receiver.

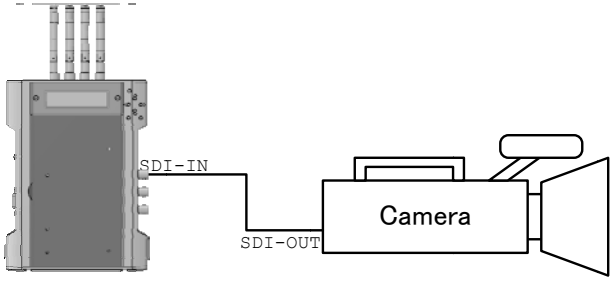

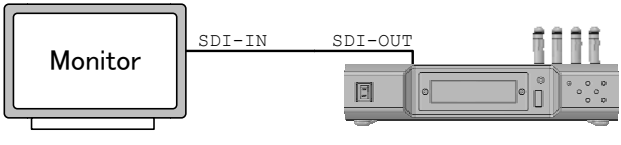

4. Turn the power ON of transmitter and receiver.
   P.24 "Power on and Power off"

5. Set the frequency in a setup menu of transmitter.
   P.52 "Setup menus - Transmitter"

6. If the connection successful, the transmitted video will be displayed on the monitor.

   Note:
   If you select the radio frequency of DFS, signal will link after about one minute of waiting time. One minute of waiting time is strict rule of DFS frequency use.

2. Return video

CW-F25 is capable to transmit the return video as well.

7. Install the antennas to the transmitter and receiver.
   P. 20 "Installation of antenna"
1. Connection of power supply to transmitter and receiver.
   P.23 "Preparing for power supply"
2. Camera and monitor setup shown in below.

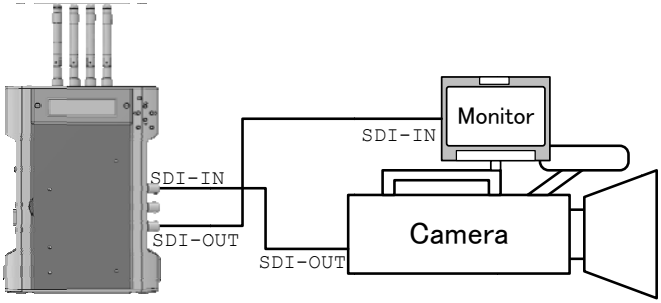

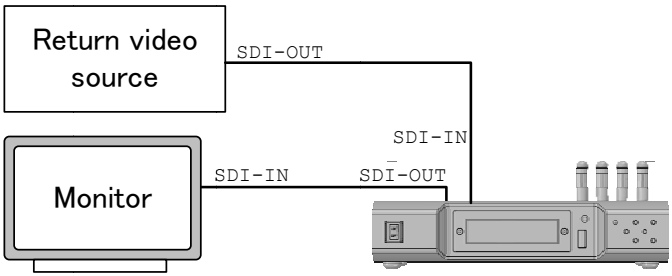

3. Turn the power ON of transmitter and receiver.
   P.24 "Power on and Power off"
4. Set the frequency in a setup menu of transmitter.
   P.52 "Setup menus - Transmitter"

5. Enable the return video in a setup menu of receiver.
   Video > Return Video > ON
   Video > Embedded Audio > ON Please select OFF If audio in the return video is not required.
   * Factory default setting is both ON.
   ☞P.60 "Setup menus - Receiver"
   The last setting is memorized even after power turned OFF.

6. If the connection successful, the downlink video will display on the monitor and the return video will display on the monitor of camera side.

3. IP camera setup - wireless LAN bridge -

Ethernet on the CW-F25 works as a wireless LAN bridge. All the devices connected to the Ethernet terminal on the CW-F25 will function as connected directly to the LAN. An example of IP camera setup.

1. Install the antennas to the transmitter and receiver.
   P. 20 "Installation of antenna"

2. Connection of power supply to transmitter and receiver.
   P.23 "Preparing for power supply"

3. IP camera connect to the Ethernet terminal on the transmitter, and the Ethernet terminal on the receiver connect to PC. For example below.

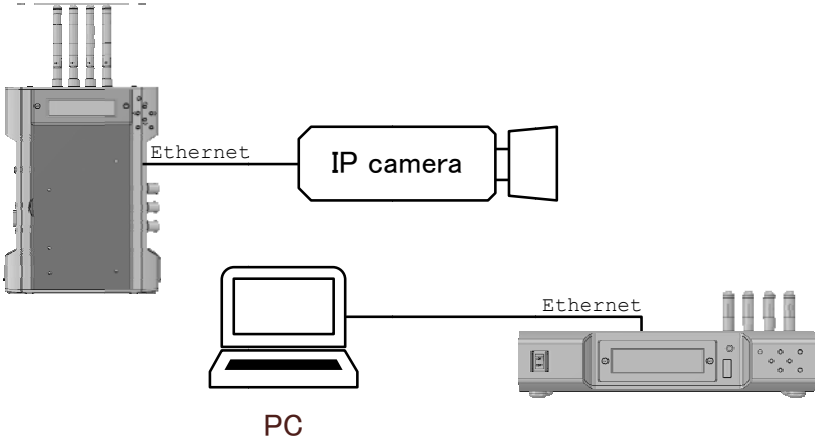

4. Turn the power ON of transmitter and receiver.
   P.24 "Power on and Power off"

5. Set the radio frequency in a setup menu of transmitter.
   P.52 "Setup menus - Transmitter"

6. When the wireless link is established firmly, video transmission will start by controlling IP camera from PC.

Wireless LAN bridge function can be used at same time as transmission of downlink video and return video.

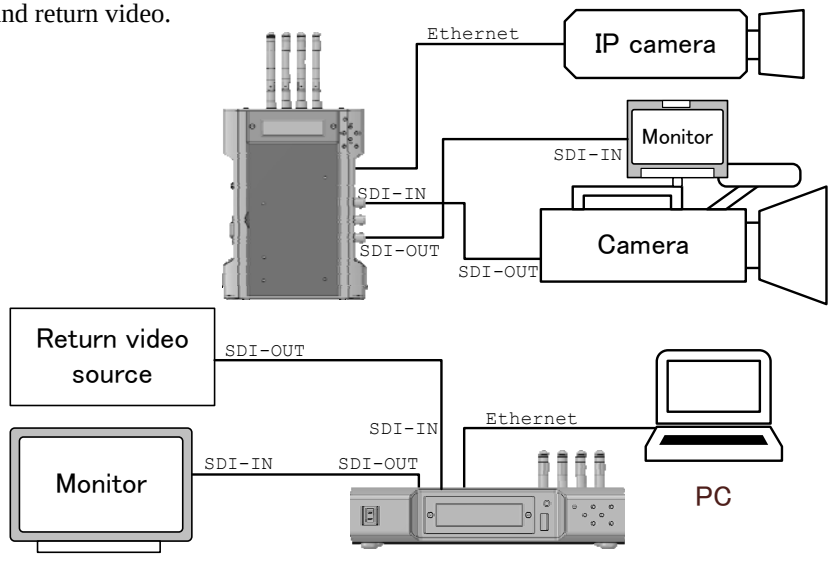

Note:

- Downlink and return video has a priority in the wireless transmission while Ethernet data communication has low priority. Therefore it is recommended to apply lower frame rate and lower video resolution on IP camera when operate both SDI and Ethernet. Specific value is depending on a transmission distance and operational environment, therefore, it is recommended for performance test prior to use.
- Ethernet interface is not supported PoE (Power Over Ethernet). Please prepare a separate power for IP camera and other Ethernet device.
- CW-F25 has no DNS and DHCP server. Therefore please assign a static IP address to IP camera and other Ethernet device or prepare a separate DNS and DHCP server.
- Please do not connect the Ethernet terminal of transmitter and receiver to existing LAN network. CW-F25 may be act as wireless LAN bridge. Ethernet topology loop occurs when the transmitter and receiver connected to the same LAN. Ethernet topology loop will cause the fault such as degradation of performance and network down, etc..

4. Intercom operation

By using a headset, voice communication is possible in between transmitter and receiver.

1. Install the antennas to the transmitter and receiver.
   P. 20 "Installation of antenna"

2. Connect of power supply to transmitter and receiver.
   P.23 "Preparing for power supply"

3. Camera and monitor setup, etc..
   P.30 "Basics", P.32 "Return video"

4. Connect the headset to transmitter and receiver.

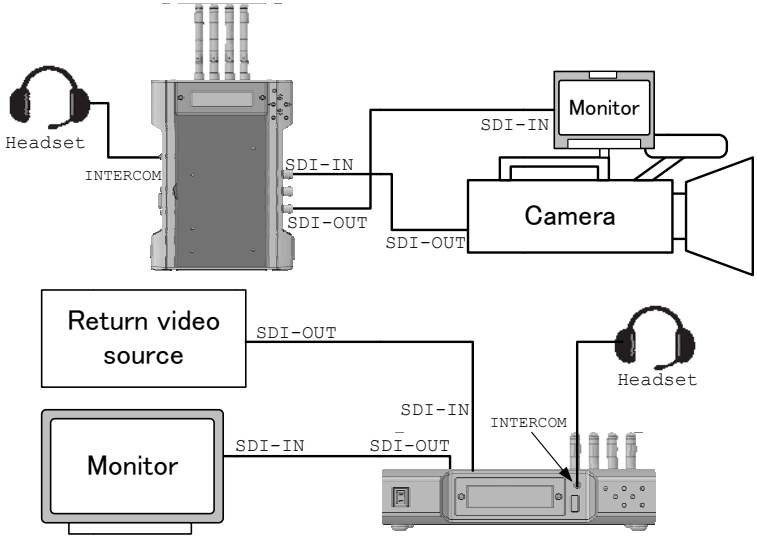

5. Turn the power ON of transmitter and receiver.
   P.24 "Power on and Power off"

6. Set the radio frequency in a setup menu of a transmitter.
   P.52 "Setup menus - Transmitter"

7. Enable an intercom in the setup menu of transmitter and receiver.
   Intercom > Intercom > ON
   * Default setting is ON..
   Last setting is memorized even after power is turned OFF.

8. CW-F25 is able to talk through the headsets on both transmitter and receiver.

Volume control

Sound and microphone volume can be set in the menu.

- Sound volume
  Intercom > Phone level > 0 to 10 , 0 is minimum. 10 is maximum.

- Microphone volume
  Intercom > Mic Level > 0 to 10, 0 is minimum. 10 is maximum.

Using another headset

Intercom jack is CTIA compliant 4-pole mini jack. Please check the pin assignment prior to use the headset on the market.

Please refer to P.75 "Connector and pin assignment" for pin assignment.

5. GPI connection - as tally

GPI input is located on the receiver and GPI output is located on the transmitter. The GPI signal feed to the receiver, will transmit to the transmitter, then outputs from GPI output.
GPI output, also, can be used as wireless connection status output by setting menu.

1. Install the antennas to transmitter and receiver.
   P. 20 "Installation of antenna"

2. Connect the power supply to transmitter and receiver.
   P.23 "Preparing for power supply"

3. Camera and monitor setup, etc..
   P.30 "Basics", P.32 "Return video"

4. Connect a contact closure output from the switcher to receiver.
   For example below.

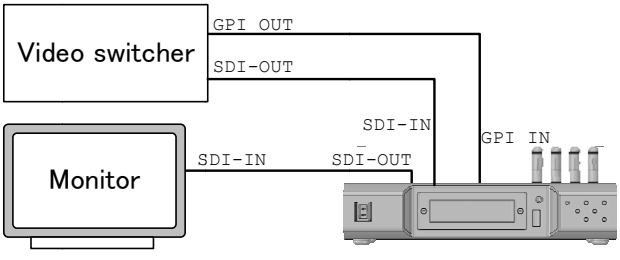

5. Connect the transmitter and tally LED unit or a monitor which has tally input.
   For example bellow.

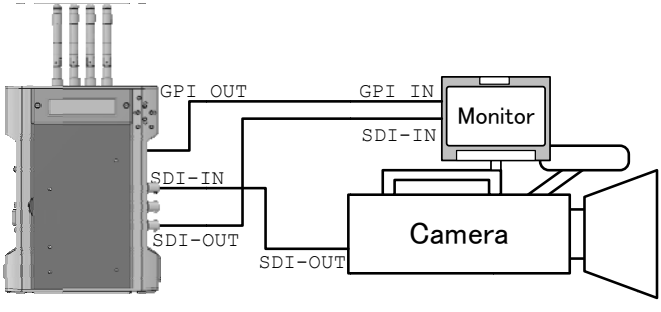

6. Turn the power ON of transmitter and receiver.
P.24 "Power on and Power off"

7. Set the radio frequency in the setup menu of transmitter.
P.52 "Setup menus - Transmitter"

8. Setting the GPI function in the setup menu of transmitter.
Tally > Tally mode > Remote or Link Status Select one.

Each function described as follows.

Remote	Contact signal input to the receiver will be transmitted and output from transmitter. Contact signal means; open=off / short=on.
Link Status	Output the state of the wireless connection. • Disconnect: open, • Waiting: open/short alternately (flashing), • Connect: short.

* Default setting is Remote.
Last setting is memorized even after power is turned OFF.

9. Setting GPI function in the settings menu of receiver.
Tally > Remote Tally > ON or OFF Select one.
ON means a GPI input is enable. OFF is disabled.
* Default setting is ON.
Last setting is memorized even after power is turned OFF.

Cable and connector

GPI connector is two-pole mini jack.
Please refer P. 75 "Connector and pin assignment".
Please prepare GPI cable, locally.

Equivalent circuit of the GPI input of receiver

GPI input is a non-voltage contact.

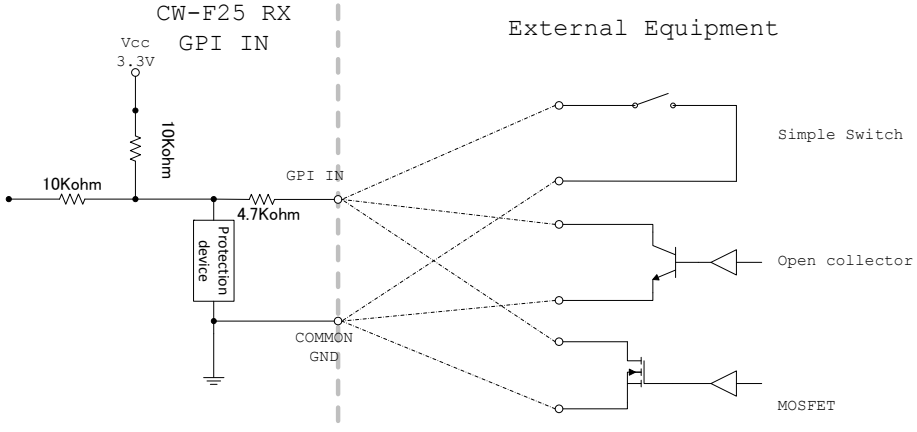

Equivalent circuit of the GPI output of transmitter.

GPI output is an open collector.

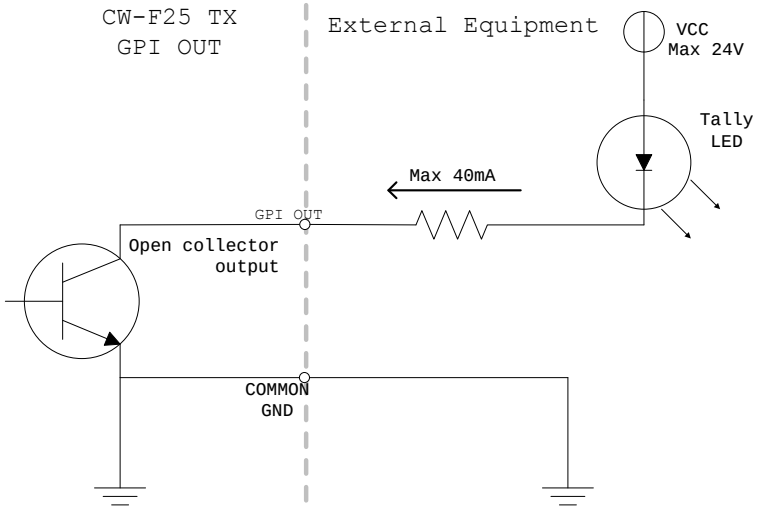

6. RS-422 remote

CW-F25 works as a media converter for between RS-422 and wireless LAN.
It made possible the wirelessly connections of between RS-422 devices.

1. Install the antennas to transmitter and receiver.
   P. 20 "Installation of antenna"

2. Connect the power supply to transmitter and receiver.
   P.23 "Preparing for power supply"

3. Camera and monitor setup, etc..
   P.30 "Basics", P.32 "Return video"

4. Connect the RS-422 device to transmitter and receiver.

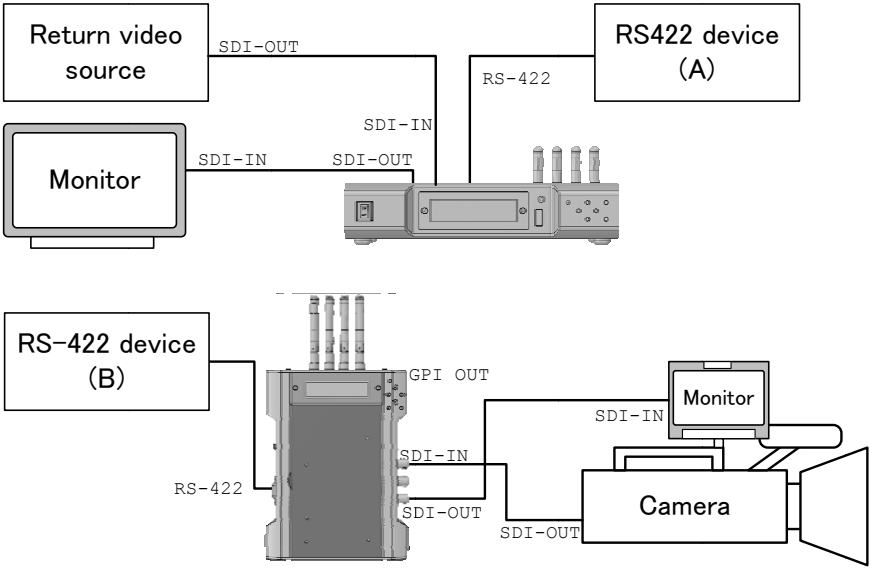

5. Turn the power ON of transmitter and receiver.
   P.24 "Power on and Power off"

6. Set the radio frequency in the settings menu of transmitter.
☞ P.52 "Setup menus - Transmitter"

7. Enable the RS-422 interface in the setup menu of receiver.
Remote > Interface > RS-422
* Default setting is OFF.
Last setting is memorized even after power is turned OFF.

8. Set a communication parameters of RS-422 in the setting menu of receiver.
Remote > Baud rate > Select baud rate. * Default is 562500 bps.
Remote > Data bit > Select data bit length. * Default is 8 bit.
Remote > Parity > Select parity. * Default is "none".
Remote > Stop bit > Select stop bit length. * Default is 1 bit.
Last setting is memorized even after power is turned OFF.

9. CW-F25 setup successful then the two-way transmission of RS-422 is started.

RS-422 cable and connector

RS-422 connector is a D-Sub 9 pin female.
Please refer P. 75 "Connector and pin assignment".
Please prepare RS-422 cable, locally.

Note
There is a transmission delay occurs because of in radio transmission. Amount of delay is depending on environment and transmission distance therefore recommend to test prior to use the system.

IV. Useful information

1. Troubleshooting

Check the following before asking for a repair. If the problem is not resolved then please contact to the dealer or our support & service. Please refer to P.82 "Support & Service contact".

1) Power does not turn on

- Check the lighting of the status LED. If it is lit or flashing means that the power it turned ON. There is a possibility of a failure if the LCD backlight is not lit when the LED is flashing or lit.
- Please be make sure whether input correct voltage.
  Voltage range of CW-F25 is DC7-17V.
- Is power supply or AC adapter turned ON?
  Is AC adapter connected to a commercial power source correctly
- Has the battery remained enough capacity and nominal output voltage?
- Is A Battery mounted onto P-V2CL correctly? A battery must mount straightly from the upper side of the V-plate. Insufficient handling of battery will be causing serious damage to the pin of V-plate.
- Isn't connection of Cannon pin reverse?
  Pin assignment of Cannon XLR-4 is: #1 = minus, #4 = plus.
- Is Cannon connecter inserted until it's firmly locked?
- When installing the A-MT2V, make sure the connection of both connectors are firmly plugged in. And, then, carefully mount and screw by confirming not to pinch the wires in between the A-MT2V and CW-F25.

2) Status LED does not lit

- Please check the power supply. Refer P.43 "Power does not turn on".
- Status LED starts to lit about 15 second later after the power turned ON. This time delay caused by the circuit initialization time, and this is not a malfunction.

3) LCD backlight does not lit

- Please check the power supply. See the P. 43 "Power does not turn on".
- LCD backlight will lit immediately after power turned ON and it is always lit during operation. It is a failure if the LCD backlight is not lit.

4) Does not connect the wireless

- Please check LED status.. Red LED lit during initialization of the system, Green LED flashing indicates state of waiting, and Green LED lit when the system has connected successfully. If the video signal is not transmitted even when the Green LED lit. Please refer P.45 "No video out".
- Please reboot the power once if a status LED is not changed to Green for more than one minute. It is a system failure if this situation has not recovered after reboot of power.
- If selected Indoor DFS or Outdoor DFS, in the setup menu, the system automatically goes into standby state for about 1 minute for searching an official radio waves. During DFS searching state, status LED is flashing green.
- Please check if antennas are firmly connected. It may be loosen while in use.
- Isn’t a distance between transmitter and receiver too close?
  In case of standard antenna operation, recommend the distance more than 3m.
  In case of directional antenna array operation, recommend the distance more than 5m.
- Is the directional antenna array setting confront correctly? Antenna cannot transmit or receive the radio waves on the back or the widthwise.
- Isn't distance too far in between the antennas? Please re-try by reducing the distance.
- Isn't there any radio wave shielding object in between the antennas? Obstacles which were made by concrete, metal and glass with electromagnetic shielding will be causing disturbance or blocking of radio waves.
- Transmission path will be affected by the surrounding buildings, obstacles and environment, therefore there are places where radio waves is weak in spite of short distance.
- Isn't 5GHz wireless LAN used by neighborhood? Wireless LAN can be co-exist even if there is another wireless been used, but may not be able to connect if the frequency is overlapped. Please try with other frequency.

- Isn't there a source of powerful electric wave nearby? Wireless connection in the area where close to the powerful radio sources is difficult. This is because the receiving sensitivity of the receiver is reduced, even if using a different frequency band. Please use away from these area.
- Is SSID setting on transmitter and receiver same? It is not possible to connect if the SSID setting were different. *Same SSID is set at factory.
- Is password setting on transmitter and receiver same? It is not possible to connect if the password setting were different. *Same password is set at factory.
- Please check the following item when IP address has changed.
  ・Subnet must be same. Please check the Netmask.
  ・IP address must not conflicts.
  Please Check the IP Address and the Codec Local IP.
  ・Codec Local IP of transmitter and Codec Remote IP of receiver must be the same. Receiver attempts to connect to an address set in Codec Remote IP. Please check when change the IP address.
  For details, please refer P.52 "Setup menus - Transmitter" & P.60 "Setup menus - Receiver".

5) No video out

- Please check the SDI connection.
  Transmitter:
  •Output of return video is 'SDI OUT' connector.
  •Output of loop-out is 'SDI THRU OUT' connector.
  Receiver:
  •Output of downlink video is SDI OUT connector.
  •Output of loop-out is 'SDI THRU OUT' connector.
  •Input of return video is 'SDI IN' connector.
- Please confirm the video format whether it is supported by the system. It is not possible to transmit if it was an unsupported video format.
  Please refer P.69 "Specification".
- Video input and output are SDI only. This product does not support an analog signal.
- Please check the camera settings. Is SDI output enabled?
- Please check the settings of monitor. Is input selection correct?
- Please check coaxial cable. Isn’t cable broken? Isn’t cable length too long? Is the video output if changed cable?

6) No audio out

- If the embedded audio of downlink video is not output, please check Embedded Audio setting of transmitter. Is it turned ON?
- If the embedded audio of the return video is not output, please check Embedded Audio setting of receiver. Is it turned ON?
- The SDI embedded audio is supported 4CH in the downlink. (Group 1)
- The SDI embedded audio in the return video is supported 2CH. (Group 1)
- CW-F25 supports only SDI embedded audio. It does not supports an analog audio and AES/EBU.

7) Video interruption & disturbance

- Please check the video rate setting. It is required more channel capacity when set at high bit rate. Reduce the setting of bit rate or set it to AUTO bit rate.
  Video block noise and/or drop frame will occur if there is no sufficient channel capacity available that causing by the interference and distance.
- Video distortion or blackout occur if the input video format is changed during transmission.
- Video will freeze temporarily if the H.264 profile is changed during transmission.
- Isn't there any radio wave shielding object in between? Obstacles which were made by concrete, metal and glass with electromagnetic shielding will be causing disturbance or blocking of radio waves.
- Transmission path will be affected by the surrounding buildings, obstacles and environment, therefore there are places where radio waves is weak in spite of short distance.
- Isn't 5GHz wireless LAN used by neighborhood? Wireless LAN can be co-exist even if there is another wireless been used, but may not be able to connect if the frequency is overlapped. Please try with other frequency.
- Isn't there a source of powerful electric wave nearby? Wireless connection in the area where close to the powerful radio sources is difficult. This is because the receiving sensitivity of the receiver is reduced, even if using a different frequency band. Please use away from these area.

8) Intercom trouble

- Please check the settings. Is Intercom setting turned ON?
- Re-adjust the microphone and phone level in the setup menu.
- Is plug correctly inserted? Please insert the plug all the way and firmly. Poor contact will occur if the plug is loose.
- When using a third-party's headset, please check a pin assignment of the plug. CW-F25 is a CTIA compliance but the third-party's headset might have a different pin arrangement
- There is a headset that has volume control. Please check volume.

9) GPI trouble

- Please check Tally setting of transmitter and receiver.
- If required remote tally, please select Remote Tally at transmitter side, and set Tally > ON at receiver side.
- Check pin assignment of e GPI cable.
- Please check the specifications of the equipment to be connected to the GPI output. Vcc of the external device must be 24V or less and current should be less than 40mA.
- GPI input is a non-voltage contact. This output cannot be connected with the equipment that represents the on/off depending on the voltage level.

10) RS-422 trouble

- Please check Remote settings. Default value is OFF. Set ON for use.
- It will not communicate if baud rate, data bits, parity, stop bits, were not matched.
- Please check the pin assignment of RS-422 cable.
- If using long cable, please replace with shorter one.
- CW-F25 does not support RS-232C.

11) Ethernet trouble

- Please check an IP address setting. Must not be assigned a duplicate IP address with other devices.

- If connecting to an existing LAN network, please check the network address or IP address of CW-F25. It is recommended to set an IP address of CW-F25 not to conflict with the subnet of existing LAN network.
- Please set an IP address in full attention to avoid duplication if the CW-F25 will be participated in existing LAN subnet.
- When connecting to an existing LAN network, please do not connect a transmitter and receiver at same time. Otherwise the network will establish wireless bridge and failure loop occurs in the LAN network. Path loop in the wireless bridge will cause of performance degradation , then the LAN network will down.

2. Revert to default settings

If the CW-F25 does not operate properly, it can be recovered by restoring the factory default setting. Factory settings is in following procedure.

1) In the setup menu, select System > Default set.
2) Default set? Yes/No will display.
3) Select Yes, then push ENTER.
4) Take a power cycle.

3. Firmware update

Updated firmware will distribute for improvement and enhancement and bug fixes. When update the firmware, complete the following steps:

It requires a USB memory. Please prepare a USB memory.

Update procedure

1) Please download an updated file from IDX webpage. It is packed in ZIP format.
2) Unzip the files.
3) If the "README" file exist in the extracted file, then read well and follow instruction.
4) Following two files are included in the update.
   Each file is a firmware for transmitter and receiver.
   ti810x_update_tx.tar.gz for the transmitter.
   ti810x_update_rx.tar.gz for the receiver.

5) Copy the "ti810x_update_tx.tar.gz" to USB memory.
6) Turn the power ON for transmitter, then insert USB memory to USB port.
7) Select System > Firmware update > Yes in the menu, and press ENTER.
8) Firmware update starts. Please do not turn the power off while updating.
9) LCD screen will return to Firmware update from YES / NO selection screen when update is complete.
10) Select System > System reboot > Yes in the menu, and press ENTER.
    Transmitter will automatically restart within a short period of time.

11) Next, Copy the "ti810x_update_rx.tar.gz" to USB memory.
12) Turn the power ON for receiver, then insert USB memory to USB port.
13) Select System > Firmware update > Yes in the menu, and press ENTER.
14) Firmware update starts. Please do not turn the power off while updating.
15) LCD screen will return to Firmware update from YES / NO selection screen when update is complete.
16) Select System > System reboot > Yes in the menu, and press ENTER. Receiver will automatically restart within a short period of time.

17) Firmware update is complete.

V. References

1. List of setup menus - Rule

In this section describes a list of setup menus and detailed description of each item.

Rule

- Menu list from the left, Menu Level 1 > Level 2 > (level 3) > represent the display content or settings item.
- Choice of settings item was separated by a slash (/).
- Default value is the item that is indicated by the _ (underscore).
- Supplemental explanation is indicated by the * (asterisk).

2. Setup menus - Transmitter

Wireless setup	Channel freq.	5190 / 5230 / 5755 / 5795 / DFS	
	SSID		*SSID set at the factory
	Password		*Password set at the factory
	WDS	ON / OFF	
	WDS MAC		*Default is blank
Network setup	IP address set	Manual / DHCP Client	
	IP address	192.168.98.100	
	Netmask	255.255.255.0	
	Gateway	192.168.98.1	
	Codec Local IP	192.168.98.112	
Video	H.264 profile	Baseline / Main / High	
	Video bit rate	3 / 5 /10 /20 / 25 / AUTO	
	Embedded audio	ON / OFF	
Tally	Tally mode	Remote / Link status	
Intercom	Intercom	ON / OFF	
	Mic level	0 - 10	*Default value is 8
	Phone Level	0 - 10	*Default value is 8
Status	About		*Display model name and firmware version
	Wireless info	Link Status	* Display link status
		Channel freq.	*Display frequency
		SSID	*Display SSID
	Networking	IP address	*Display IP address
		Netmask	*Display Netmask
		MAC address	*Display MAC address
	WDS		*Display WDS setting status
System	Default set	Yes / No	
	Firmware update	Yes / No	
	System reboot	Yes / No	
	Codec reboot	Yes / No	

Details of the setup menus - transmitter

Wireless setup > Channel freq. — Setting frequency

Items	5190MHz/ 5230MHz/ 5755MHz / 5795MHz / DFS

If selected DFS, it automatically selects from five frequencies of following.

5270, 5310, 5510, 5550, 5670MHz

If DFS is selected, system will wait the transmission about one minute for scanning available frequencies which is specified in the standard. After scanning been done, then starts communication with selecting frequency automatically.

Wireless setup > SSID — Setting SSID

Items	Enter the SSID. 1-16 characters. Characters are alphabet, numbers, and other symbols.

Set the SSID for wireless LAN.
Default SSID is set at factory.
Default SSID has been set not to overlap with other CW-F25. Therefore it is no need to re-set the SSID in normal use.
If entered a space between the characters, the system will be recognized as valid SSID just until before the space. String must be exactly the same on both transmitter and receiver
An interruption of transmission will occur when the SSID setting is changed during transmission. However it will re-connect soon.

Wireless setup > Password — Setting password

Items	Enter the Password for Wireless LAN. 8 - 16 characters. Characters are alphabet, numbers, and other symbols.

Set password for wireless LAN.
Default password is set at factory.
If entered a space between the characters, the system will be recognized as valid password just until before the space
String must be exactly the same on both transmitter and receiver.
An interruption of transmission will occur when the password setting is changed during transmission. However it will re-connect soon.

Wireless setup > WDS — Setting WDS

Items	ON / OFF

Setting up WDS configuration of wireless LAN.
WDS stands for Wireless Distribution System and that is used as other wireless access point as a repeater, and this enables to extend the range of wireless transmission.
Set to ON when using WDS function. Then register the MAC address of wireless LAN repeater to the item of WDS MAC.
In the WDS mode, please use non-DFS frequencies. WDS does not work if DFS is selected.

Note:

- Transmission delay will be increased when using wireless LAN repeater. An amount of delay is depending on wireless environment and the performance of repeater.
- Wireless access point must have a WDS function, to be used as a repeater for CW-F25.

Wireless setup > WDS MAC — Register WDS MAC address

Items	Enter the WDS MAC address. 12-digit. Available characters are0-9, A-F.

Register a MAC address of the wireless LAN repeater for use with WDS.

Network setup > IP address set — Setting an IP address acquisition method

Items	Manual / DHCP Client

Select how to get the IP address.
Manual: Set an IP address in the setup menu in IP address.
DHCP Client: Get an IP address from the DHCP server which exists on the same LAN.

Network setup > IP address — Setting IP address (1)

Items	Enter IP address.

Set IP address.
Default IP address of transmitter is 192.168.98.100. Please change if overlapped with existing equipment on the LAN.

Network setup > Netmask — Setting IP Netmask

Items	Enter IP Netmask.

Enter IP Netmask.
Default value is 255.255.255.0

Network setup → Gateway — Setting IP gateway

Items	Enter IP gateway address.

Enter IP address of gateway.
Default value is 192.168.98.1.
Not required to change the setting, in case of not use router or no IP gateway exist.

Network setup > Codec Local IP — Setting IP address (2)

Items	Enter IP address.

Enter the codec module IP address which built in an the unit.
Default IP address of transmitter is 192.168.98.112. Please change if overlapped with existing equipment on the LAN.
Note:
Must be the same subnet as "Setting the IP address (1)".
For example.

Setting of the IP address (1): 192.168.111.10 Netmask 255.255.255.0
Setting of the IP address (2): 192.168.111.11

Video > H.264 profile — Setting H.264 profile

Items	Baseline / Main / High

Set the H.264 profile of downlink video transmission.

Baseline	Baseline profile
Main	Main profile
High	High profile

Default setting is the High profile.
If change the profile during transmission, may occur blackout and video distortion.

Note:
Baseline Profile supports progressive video, but not supported interlaced video and PsF.

Video > Video bit rate — Setting H.264 bit rate

Items	3Mbps / 5Mbps / 10Mbps / 20Mbps / 25Mbps / AUTO

Set H.264 bit rate of downlink video transmission.
Default setting is "AUTO".
"AUTO" enables an adaptive variable rate control function. In accordance with fluctuation of wireless channel capacity, and vary a video bit rate automatically.
If selected an individual bit rate, enables to transmit with constant bit rate.

Video > Embedded audio — Setting embedded audio

Items	ON / OFF

Set ON/OFF of SDI embedded audio on downlink video transmission.
ON: SDI embedded audio channel 1-4 of group1 will be transmitted.
OFF: SDI embedded audio will not be transmitted.

Tally > Tally mode — Setting GPI output

Items	Remote / Link status

Set GPI output.
Default setting is "Remote"

Remote:	Contact state is either open or short. Input for GPI terminal of receiver is output from GPI output terminal of transmitter.
Link status:	Becomes independent from the GPI status of receiver. Following are the status of wireless LAN connection which is output from GPI terminal on transmitter.

Not linked:	Open
Waiting for link:	Alternating short and open (flashing)
Linked:	Short

Intercom > Intercom — Setting intercom

Items	ON / OFF

Set the intercom enable or disable.
Default is ON.

Intercom > Mic level — Setting microphone gain

Items	0(min) - 10(max)

Set the audio input gain of intercom.
Gain can be adjusted in between 0 ~ 10. Default value is 8.

Intercom > Phone level — Setting headphone volume

Items	0(min) - 10(max)

Set the intercom audio output volume.
Gain can be adjusted in between 0 ~ 10. Default value is 8.

Status > About — Display info.

Items	Display model name and firmware version.

Display model name and firmware version.

Status > Wireless info > Link Status — Display connection status

Items	Display connection status.

Display connection status of the wireless LAN. "Connect" or "Disconnect".

Status > Wireless info > Channel freq. — Display frequency

Items	Display radio frequency.

Display radio frequency currently in use.
Frequency will be selected automatically if DFS is enabled. Can be confirmed the frequency currently in use by this display.

Status > Wireless info > SSID — Display SSID

Items	Display SSID

Display SSID.

Status > Networking > IP address — Display IP address

Items	Display IP address

Display IP address currently in use. If enabled DHCP, can be confirmed an assigned IP address in this menu.

Status > Networking > Netmask — Display Netmask

Items	Display Netmask

Display IP Netmask currently in use. If enabled DHCP, can be confirmed an assigned the IP Netmask in this menu.

Status > Networking > MAC address — Display MAC address

Items	Display MAC address

Display MAC address of the unit.

Status > WDS — Display WDS status

Items	Display WDS status

Display WDS status whether it is enabled or disabled.

System > Default set — Revert to default

Items	Yes / No

Clear the settings and revert to the factory defaults.

System > Firmware update — Firmware update

Items	Yes / No

Update firmware.
See the P.49 "Firmware update".

System > System reboot — Restart (1)

Items	Yes / No

Restart the unit.

System > Codec reboot — Restart (2)

Items	Yes / No

Restart the codec module only.

3. Setup menus - Receiver

Wireless setup	SSID		*SSID set at the factor
	Password		*Password set at the factor
Network setup	IP address set	Manual / DHCP Client	
	IP address	192.168.98.200	
	Netmask	255.255.255.0	
	Gateway		*Default is blan
	Codec Local IP	192.168.98.111	
	Codec Remote IP	192.168.98.112	
Video	Video bit rate	2 / 3 / AUTO	
	Return video	ON / OFF	
	Embedded audio	ON / OFF	
Tally	Remote Tally	ON / OFF	
Remote	Interface	RS-422 / OFF	
	Baud rate	9600/19200/38400/56200/115200/ 230400/460800/562500 bps	
	Data bit	8 / 7	
	Parity	none / odd /even	
	Stop bit	1 / 2	
Intercom	Intercom	ON / OFF	
	Mic level	0 - 10	*Default value is
	Phone Level	0 - 10	*Default value is
Status	About		*Display model name and firmware versio
	Wireless info	Link Status	*Display link status
		Channel freq.	*Display frequency
		SSID	*Display SSID
	Networking	IP address	*Display IP address
		Netmask	*Display Netmask
		MAC address	*Display MAC address
System	Default set	Yes / No	
	Firmware update	Yes / No	
	System reboot	Yes / No	
	Codec reboot	Yes / No	

Details of the setup menus - receiver

Wireless setup > SSID — Setting SSID

Items	Enter the SSID. 1-16 characters. Characters are alphabet, numbers, and other symbols.

Set the SSID for wireless LAN.
Default SSID is set at factory.
Default SSID has been set not to overlap with other CW-F25. Therefore it is no need to re-set the SSID in normal use.
If entered a space between the characters, the system will be recognized as valid SSID just until before the space. String must be exactly the same on both transmitter and receiver.
Do the power cycle after changing SSID.

Wireless setup > Password — Setting password

Items	Enter the Password for Wireless LAN. 8 - 16 characters. Characters are alphabet, numbers, and other symbols.

Set password for wireless LAN.
Default password is set at factory.
If entered a space between the characters, the system will be recognized as valid password just until before the space.
String must be exactly the same on both transmitter and receiver.
An interruption of transmission will occur when the password setting is changed during transmission. However it will re-connect soon.

Network setup > IP address set — Setting an IP address acquisition method

Items	Manual / DHCP Client

Select how to get the IP address.
Manual: Set an IP address in the setup menu in IP address.
DHCP Client: t Get an IP address from the DHCP server which exists on the same LAN.

Network setup > IP address — Setting IP address (1)

Items	Enter IP address

Set IP address.
Default IP address of receiver is 192.168.98.200. Please change if overlapped with existing equipment on the LAN.

Network setup > Netmask — Setting IP Netmask

Items	Enter IP Netmask

Enter IP Netmask.
The default value is 255.255.255.0

Network setup > Gateway — Setting IP gateway

Items	Enter IP gateway address.

Enter IP address of gateway.
Default value is 192.168.98.1.
Not required to change the setting, in case of not use router or no IP gateway exist.

Network setup > Codec Local IP — Setting IP address (2)

Items	Enter IP address.

Enter the codec module IP address which built in an the unit.
Default IP address of the receiver is 192.168.98.112. Please change if overlapped with existing equipment on the LAN.
Note:
Must be the same subnet as "Setting the IP address (1)".
For example.

Setting of the IP address (1): 192.168.111.20 Netmask 255.255.255.0
Setting of the IP address (2): 192.168.111.21

Network setup > Codec Remote IP — Setting IP address (2)

Items	Enter IP address.

Enter the codec module IP address which build in an the transmitter.
Default IP address of the transmitter is 192.168.98.112. Please change if overlap with existing equipment on the LAN.

Important:

Please set same address as Codec Local IP of transmitter side always.
If settings to different IP address, not be able to connect .

Video > Video bit rate — Setting H.264 bit rate

Items	2Mbps / 3Mbps / AUTO

Set H.264 bit rate for return video transmission.
Default setting is "AUTO".
"AUTO" enables an adaptive variable rate control function. In accordance with fluctuation of wireless channel capacity, and vary a video bit rate automatically.
If selected an individual bit rate, enables to transmit with constant bit rate..

Video > Return video — Setting return video

Items	ON / OFF

Set ON/OFF of return video transmission.
ON: Return video transmission is enabled.
OFF: Return video transmission is disabled.

Video > Embedded audio — Setting embedded audio

Items	ON / OFF

Set ON/OFF of SDI embedded audio on return video transmission.
ON: SDI embedded audio channel 1-2 of group1 will be transmitted.
OFF: SDI embedded audio will not be transmitted.

Tally > Remote Tally — Setting GPI input

Items	ON / OFF

Set GPI input.
Default is ON.

ON: Contact state is either open or short. Input for GPI terminal of receiver is output from GPI output terminal of transmitter
OFF:GPI input of receiver is disabled.

Remote > Interface — Setting RS-422

Items	RS-422 / OFF

Settings of remote RS-422.
Default setting is OFF.
If select the "RS-422", remote transmission of RS-422 is enabled.

Remote > Baud rate — Setting baud rate

Items	9600 / 19200 / 38400 / 56200 / 115200 / 230400 / 460800 / 562500 (bps)

Set baud rate of RS-422.
Default value is 562500bps (562.5Kbps).
Must be matched the baud rate with RS-422 equipment.

Remote > Data bit — Setting data bit length

Items	8 / 7 (bit)

Set the data bit length of the RS-422.
Default value is 8bit.
Must be matched the baud rate with RS-422 equipment.

Remote > Parity — Set parity

Items	none / odd / even

Set parity of RS-422.

none	no parity
odd	odd parity
even	even parity

Default value is "none".
Must be matched the baud rate with RS-422 equipment.

Remote > Stop bit — Setting stop bit length

Items	1 / 2 (bit)

Set stop bit length of RS-422.
Default is 1 bit.
Must be matched the baud rate with RS-422 equipment.

Intercom > Intercom — Setting intercom

Items	ON / OFF

Set the intercom enable or disable.
Default is ON.

Intercom > Mic level — Setting microphone gain

Items	0(min) - 10(max)

Set the audio input gain of intercom.
Gain can be adjusted in between 0 ~ 10. Default value is 8.

Intercom > Phone level — Setting headphone volume

Items	0(min) - 10(max)

Set the intercom audio output volume.
Volume can be adjusted in between 0~10. Default value is 8.

Status > About — Display info.

Items	Display model name and firmware version.

Display model name and firmware version.

Status > Wireless info > Link Status — Display connection status

Items	Display connection status.

Display connection status of the wireless LAN. "Connect" or "Disconnect".

Status > Wireless info > Channel freq. — Display frequency

Items	Display radio frequency.

Display radio frequency currently in use.
Frequency will be selected automatically if DFS is enabled. Can be confirmed the frequency currently in use by this display.

Status > Wireless info > SSID — Display SSID

Items	Display SSID

Displays SSID that is currently connected.
If not connected, cannot display SSID.

Status > Networking > IP address — Display IP address

Items	Display IP address

Display IP address currently in use. If enabled DHCP, can be confirmed an assigned IP address in this menu.

Status > Networking > Netmask — Display Netmask

Items	Display Netmask

Display IP Netmask currently in use. If enabled DHCP, can be confirmed an assigned the IP Netmask in this menu.

Status > Networking > MAC address — Display MAC address

Items	Display MAC address

Display MAC address of the unit.

System > Default set — Revert to default

Items	Yes / No

Clear the settings and revert to the factory defaults.

System > Firmware update — Firmware update

Items	Yes / No

Update firmware.
See P.49 "Firmware update".

System > System reboot — Restart (1)

Items	Yes / No

Restart the unit.

System > Codec reboot — Restart (2)

Items	Yes / No

Restart the codec module only.

4. Status LED

Status LED will display an operating state simply.
Meaning of the LED display is shown as below.

Color	State	Meanings
-	Off	Hardware initialization will take a place immediately after power ON.
RED	On	Software initialization will take a place after hardware initialization done
GREEN	Flashing	Waiting for connection. This is including the waiting time for DFS connection
GREEN	On	Connected.
RED	Flashing	Error occurred.

5. Specification

1) Transmitter

Video & Audio	
Video signal	3G-SDI(SMPTE 424M Level A) / HD-SDI(SMPTE 292M)
Audio signal	SDI Embedded Audio
Video format	3G: 4:2:2 YCbCr 10bit 1080i/60, 1080i/59.94, 1080i/50 HD: 4:2:2 YCbCr 10bit 1080i/60, 1080i/59.94, 1080i/50, 1080p/30, 1080p/29.97, 1080p/25, 1080p/24, 1080p/23.98, 1080PsF/30, 1080PsF/29.97, 1080PsF/25, 1080PsF/24, 1080PsF/23.98, 720p/59.94, 720p/50
Audio format	PCM 24bit 48kHz
Timecode	ATC-VITC (For downlink video only)
Wireless transmission	
Frequencies	5GHz Wi-Fi band 5150-5250MHz(2CH) 5250-5350MHz(2CH, with DFS) 5470-5725MHz(3CH, with DFS) 5725-5850MHz(2CH) only USA
Channel bandwidth	40MHz
Transmission power	17dbm max.
Wi-Fi standard	IEEE 802.11n
DFS function	The transmitter works as a DFS master.
Wi-Fi security	WPA2-PSK (AES)
Antenna connector	R-SMA Jack x 4
Antenna	Standard 2dBi Omni-directional dipole x4 Option 18dBi Directional panel antenna. Enclosed the 4 antenna in 1 package.
Function	4x4 MIMO (Multi-Input / Multi-Output) DFS
H.264 codec	
Video bit rate	3, 5, 10, 20, 25Mbps (Downlink video) 2, 3 Mbps (Return video)

H.264 profile	Baseline profile / Main profile / High profile	
Audio channels	4ch for downlink / 2ch for return video	
Adaptive Variable Rate Control	Vary the video rate automatically. Select of constant or variable on the setting.	
Transmission delay	About 250msec one-way. Include wireless transmission delay & codec delay.	
Transmission mode		
Transmission mode	Unicast (1 TX to 1 RX)	
GPI		
Electrical spec.	Open collector output.	
Function	Remote / Link status, selectable	
Remote signal		
Interface	RS-422	
Baud rate	9600/19200/38400/56200/115200/230400/460800/562500 bps. Maximum 562.5Kbps	
Intercom		
Input	Unbalanced, monaural	Impedance 2.2K ohm
Output	Unbalanced, stereo	Impedance 32 ohm
Connector	CTIA compliant 4-pole mini jack	
Ethernet		
Interface	GbE (1000BASE-T)	
Function	Acts as a LAN terminal of the wireless bridge.	
Indication and operation		
Power switch	Power ON/OFF	
Status LED	System status LED, Green/Red 2 colors.	
LCD	16col x 2 rows with backlight	
Push buttons	Enter, ESC, Up, Down, Left, Right	
Input and Output terminal		
Video input	BNC x1 (SDI)	
Video output	BNC x2 (SDI Buffered out / SDI return video out)	
GPI	3.5Φ 2p mini jack x1	
Remote	D-Sub 9pin x1 (RS-422)	
Intercom	3.5Φ 4p mini jack x1	
Ethernet	RJ-45 x1 (GbE)	
Power supply terminal	ITT Cannon XLR-4 male (#1－ / #4＋)	
USB	USB type A x1	

General	
Dimensions	201.5mm x 154mm x 44mm
Mass	1150g (approx.)
Power input	DC 7-17V
Power consumption	15W MAX
Temperature	0～50 deg C (operational)
Regulation / Certification	FCC Part 15.407
	RoHS

2) Receiver

Video & Audio	
Video signal	3G-SDI(SMPTE 424M Level A) / HD-SDI(SMPTE 292M)
Audio signal	SDI Embedded Audio
Video format	3G: 4:2:2 YCbCr 10bit 1080i/60, 1080i/59.94, 1080i/50 HD: 4:2:2 YCbCr 10bit 1080i/60, 1080i/59.94, 1080i/50, 1080p/30, 1080p/29.97, 1080p/25, 1080p/24, 1080p/23.98, 1080PsF/30, 1080PsF/29.97, 1080PsF/25, 1080PsF/24, 1080PsF/23.98, 720p/59.94, 720p/50
Audio format	PCM 24bit 48kHz
Timecode	ATC-VITC (For downlink video only)
Wireless transmission	
Frequencies	5GHz Wi-Fi band 5150-5250MHz(2CH) 5250-5350MHz(2CH, with DFS) 5470-5725MHz(3CH, with DFS,) 5725-5850MHz(2CH) only USA
Channel bandwidth	40MHz
Transmission power	17dbm max.
Wi-Fi standard	IEEE 802.11n
DFS function	The receiver works as a DFS slave.
Wi-Fi security	WPA2-PSK (AES)
Antenna connector	R-SMA Jack x 4
Antenna	Standard 2dBi Omni-directional dipole x4 Option 18dBi Directional panel antenna. Enclosed the 4 antenna in 1 package.
Function	4x4 MIMO (Multi-Input / Multi-Output) DFS
H.264 codec	
Video bit rate	3, 5, 10, 20, 25Mbps (Downlink video) 2, 3 Mbps (Return video)
H.264 profile	Baseline profile / Main profile / High profile
Audio channels	4ch for downlink / 2ch for return video
Adaptive Variable Rate Control	Vary the video rate automatically. Select of constant or variable on the setting.

Transmission delay	About 250msec one-way. Include wireless transmission delay & codec delay.	
Transmission mode		
Transmission mode	Unicast (1 TX to 1 RX)	
GPI		
Electrical spec.	Non-voltage contact input	
Works	transmit the contact signal from an external device.	
Remote signal		
Interface	RS-422	
Baud rate	9600/19200/38400/56200/115200/230400/460800/562500 bps. Maximum 562.5Kbps	
Intercom		
Input	Unbalanced, monaural	Impedance 2.2K ohm
Output	Unbalanced, stereo	Impedance 32 ohm
Connector	CTIA compliant 4-pole mini jack	
Ethernet		
Interface	GbE (1000BASE-T)	
Function	Acts as a LAN terminal of the wireless bridge.	
Indication and operation		
Power switch	Power ON/OFF	
Status LED	System status LED, Green/Red 2 colors.	
LCD	16col x 2 rows with backlight	
Push buttons	Enter, ESC, Up, Down, Left, Right	
Input and Output terminal		
Video input	BNC x1 (SDI)	
Video output	BNC x2 (SDI Buffered out / SDI downlink video out)	
GPI	3.5Φ 2p mini jack x1	
Remote	D-Sub 9pin x1 (RS-422)	
Intercom	3.5Φ 4p mini jack x1	
Ethernet	RJ-45 x1 (GbE)	
電源端子	ITT Cannon XLR-4 male (#1－ / #4＋)	
USB	USB type A x1	
General		
Dimensions	213mm x 157mm x 49mm	
Mass	1100g (approx.)	
Power input	DC 7-17V	
Power consumption	15W MAX	
Temperature	0～50 deg C (operational)	

Regulation / Certification	FCC Part 15.407
	RoHS

6. Connector and pin assignment

1) RS-422 D-Sub 9pin

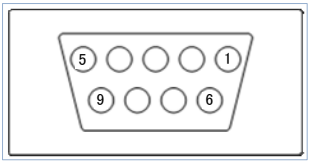

Pin#	RS-422
1	TXD-
2	TXD+
3	RTS-
4	RTS+
5	GND
6	RXD-
7	RXD+
8	CTS-
9	CTS+

2) GPI IN/OUT 3.5φ 2P mini plug/jack

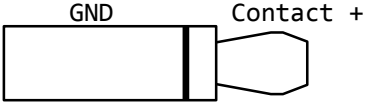

3) Intercom 3.5φ 4P mini plug/jack (CTIA compliance)

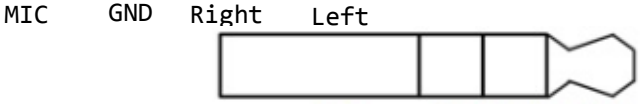

4) DC Power Input ITT-Cannon XLR-4

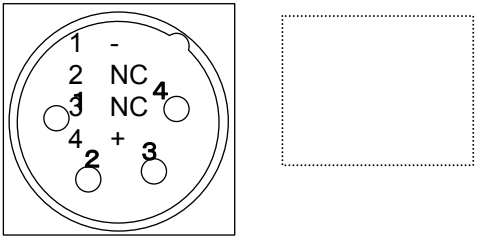

7. Index

3

3G-SDI 68, 71

5

5GHz 9, 68, 71

8

802.11n 68, 71

A

A-4XANT 15, 21
Adaptive variable-rate control 4
Adopter Plate 15
A-MT2V 15
antenna 10, 15, 19, 20, 21, 43, 68, 71
audio 45, 55, 56, 62, 64
AUTO 51, 55, 59, 62

B

backlight 43, 69, 72
battery 22
bit rate 27, 51, 55, 59, 62, 69, 71
bps 41, 63, 69, 72
button 26

C

cable 7, 15, 21, 23, 38, 41, 44, 46
camera 35, 37
Cannon 42, 69, 72, 74
CE 2
certification 9
channel 55, 62
Channel 28, 51, 52, 57, 59, 65, 68, 71

channel capacity 55, 62
coaxial 44
codec 44, 51, 54, 58, 59, 61, 62, 66
connect 35, 37, 40, 56, 65
Connector 36, 38, 41, 69, 72, 74
contact signal 38, 72
CTIA 69, 72, 74
cursor 11, 13, 26
CW-F25 ..... 1, 10, 21, 29, 40, 46, 47, 49, 52, 82

D

DC 11, 14, 22, 70, 72, 74
default 32, 36, 48, 50, 54, 56, 58, 61, 62, 64, 66
DFS 5, 30, 43, 51, 52, 53, 57, 65, 67, 68, 71
DHCP 51, 53, 57, 59, 60, 65
Directional 15, 68, 71
disconnect 56, 65
display 6, 27, 48, 50, 57, 65, 67
downlink video 4, 31, 44, 45, 55, 68, 71, 72
D-Sub 12, 14, 41, 69, 72, 74
Dynamic Frequency Selection 5

E

embedded audio 51, 55, 59, 62
ENTER 11, 13, 25, 26, 48, 49
ESC 11, 13, 26, 69, 72
Ethernet 11, 14, 46, 69, 72

F

FCC 2
firmware 48, 49, 51, 58, 59, 66
frequency 28, 30, 33, 35, 38, 41, 51, 52, 57, 59, 65

G

gain 15, 56, 64
gateway 51, 54, 59, 61
GPI 11, 14, 37, 38, 39, 46, 55, 62, 63, 69, 72, 74

H

H.264 ..... 45, 51, 54, 55, 62, 68, 69, 71
HD-SDI 68, 71
Headset 10

I

IDX 1, 2, 22, 80, 81, 82, 1
IEEE 68, 71
indoor 9
intercom 12, 13, 35, 36, 46, 51, 56, 59, 64, 69, 72, 74
interference 2
IP 26, 33, 46, 47, 51, 53, 54, 57, 59, 60, 61, 62, 65
IP address 26, 46, 47, 51, 53, 54, 57, 59, 60, 61, 62, 65
IP camera 33

J

jack 38, 69, 72, 74

L

LAN 33, 40, 47, 52, 53, 54, 56, 60, 61, 62, 65, 69, 72
LCD 11, 13, 24, 43, 48, 49, 69, 72
LED 67, 69, 72
license 9
link 27, 51, 59
lithium-ion 22

M

MAC 51, 53, 57, 59, 65
menu 11, 13, 24, 26, 30, 32, 33, 35, 36, 38, 41, 46, 48, 49, 53, 57, 60, 65
mic 36, 51, 56, 59, 64
MIMO 15, 68, 71
monitor 30, 35, 37, 44

N

netmask 44, 51, 54, 57, 59, 61, 65
network 26, 51, 53, 54, 59, 60, 61

O

outdoor 9

P

password 51, 52, 59, 60
phone 36, 51, 56, 59, 64
plug 7, 21, 74
Power base station 22
power supply 7, 22, 23, 35, 37, 40, 42, 43
profile 45, 51, 54, 55, 69, 71
push button 24
P-V2CL 15, 16, 18

R

reboot 43, 48, 49, 51, 58, 59, 66
regulations 9
remote 38, 41, 44, 46, 51, 55, 59, 61, 62, 63, 64, 69, 72
Remote 38, 41, 44, 46, 51, 55, 59, 61, 62, 63, 64, 69, 72
return video 4, 31, 32, 34, 35, 37, 40, 44, 45, 59, 62, 69, 71
RP-SMA 11, 14, 21
RS-422 ..... 12, 14, 40, 41, 46, 59, 63, 64, 69, 72, 74

S

S/N ratio 27
screw hole 12, 13
SDI 11, 14, 27, 44, 55, 62, 68, 69, 71, 72
setup 11, 13, 26, 28, 32, 38, 41, 46, 48, 50, 51, 52, 53, 54, 59, 60, 61
signal strength 27
SMA 68, 71
SNR 27
SSID 51, 52, 57, 59, 60, 65
status 11, 13, 38, 42, 51, 56, 57, 59, 64, 65, 67, 69, 72
Status LED 11, 13, 42, 43, 67, 69, 72
switch 12, 13, 23, 69, 72
system 48, 49, 51, 58, 59, 66, 69, 72, 1

T

tally 37, 46
Tally 38, 46, 51, 55, 59, 62
transmission 4, 5, 45, 55, 62, 63, 68, 69, 71, 72

U

USB 12, 13, 48, 49, 69, 72

V

Vcc 46
V-Mount 15, 16
V-Plate 13, 15, 16

W

WDS 51, 53, 57
wireless 5, 27, 28, 51, 52, 53, 56, 57, 59, 60, 64, 65, 68, 71
Wireless LAN 5, 52, 60

X

XLR-4 ..... 11, 14, 42, 69, 72, 74

VI. Warranty & Service

1. Product warranty

- Warranty period of this product is 1 years after purchase.
- Warranty covers manufacturing defects caused by poor workmanship or materials.
- Warranty may be voided even within the warranty period when IDX noticed followings: Improper use of this product / Malfunction due to excess or deficiency of power / Malfunction due to power short circuit / Physical damages caused by dropping or vibration / Malfunction due to water / Unauthorized used and/or modification done by customer
- Original serial numbers removed or tampered with voids any warranty.

2. About exemptions

IDX does not take responsibility for failure generated by or as a result of any of the following items.

- Damage caused by natural disasters, such as earthquakes, thunder storms, flood damage and fire or acts by third parties outside the responsibility of our company other accidents, and intentional negligence and misuse by the user, or use under unusual conditions.
- Consequential damage through misuse of this product, or malfunction (change, disappearance of the information contents, loss of profits, enterprise failure, etc.)
- Damage produced by non-compliance with the items mentioned in the operating manual.
- Damage produced from using non-compatible hardware and software does not approved, tested by IDX .

3. Support & Service contact

When any assistance is needed, please contact your local IDX dealer or appropriate IDX office below.

- WEB
  http://idxtek.com/idx_contact/form

- Contact us
  IDX System Technology, Inc.
  19001 Harborgate Way, Suite 105
  Torrance, CA 90501 USA
  Tel: +1-310-328-2850
  Fax: +1-310-328-8202
  E-mail: idx.usa@idx.tv

CW-F25 Instruction manual, US version.
XXWK140187
1st DRAFT Edition, 1 Jun. 2014

IDX Company, Ltd.
6-28-11 Shukugawara,
Tama-ku, Kawasaki-shi, Kanagawa-ken,
214-0021 JAPAN

http://www.idx.tv/

FOR SALES AND SERVICE CONTACT

In Japan / Asia

IDX Company, Ltd.
6-28-11 Shukugawara,
Tama-Ku,
Kawasaki-Shi, Kanagawa-Ken
214-0021,
JAPAN
TEL: 81-44-850-8801
FAX: 81-44-850-8838
E-mail: idx.japan@idx.tv

In the United States

IDX System Technology, Inc.
19001 Harborgate Way,
Suite 105 Torrance
CA 90501
USA

TEL: 1-310-328-2850
FAX: 1-310-328-8202
E-mail: idx.usa@idx.tv

In Europe / Middle East.

IDX Technology Europe Ltd.
Unit 9, Langley Park,
Waterside Drive, Langley,
Berkshire SL3 6AD
ENGLAND

TEL: 44-1753-547692
FAX: 44-1753-546660
E-mail: idx.europe@idx.tv