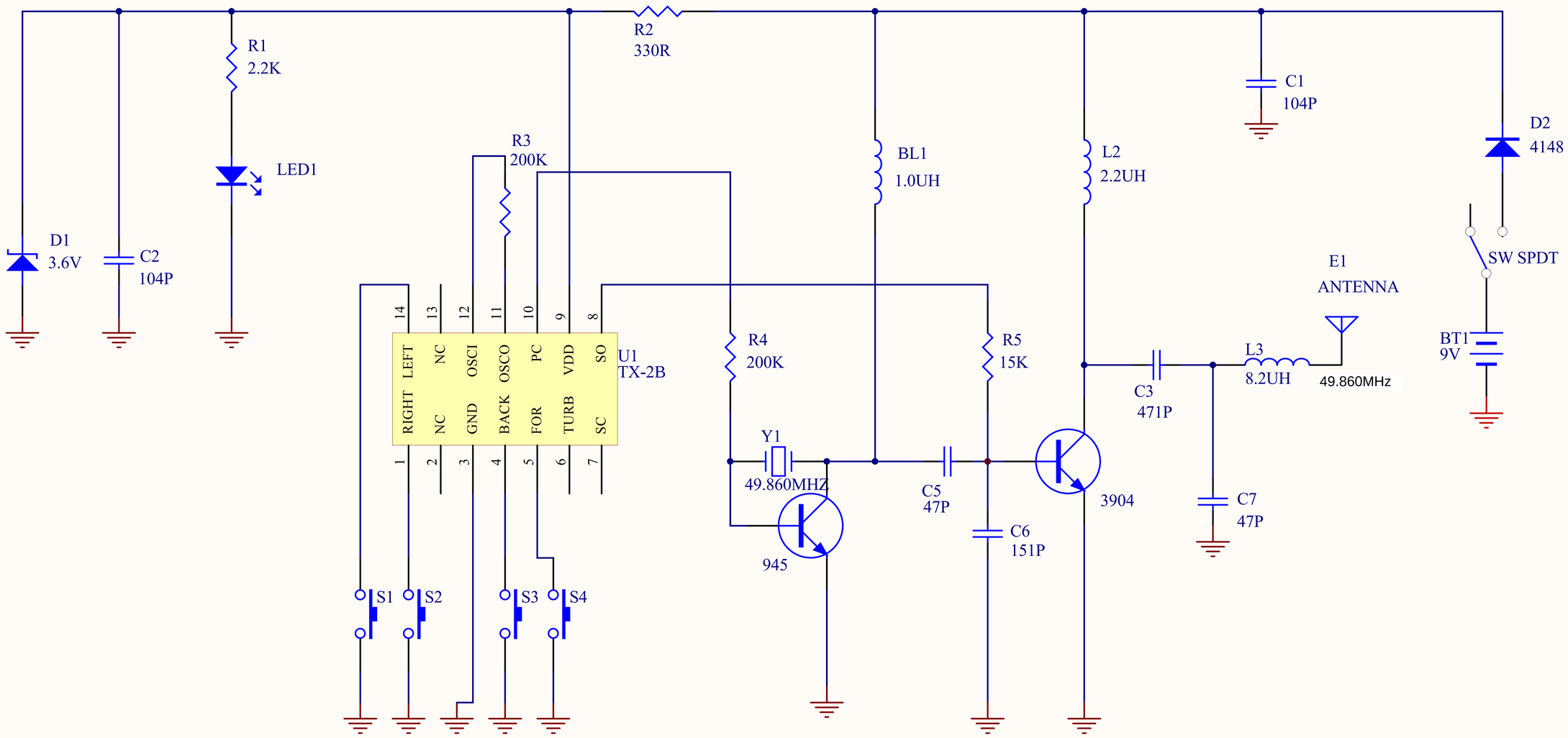

Title		
Size A4	Number	Revision
Date: 2014-4-9		Sheet of
File: F:\2012 \..\(49M)WB-607T.sch		Drawn By: