THIS DRAWING CONTAINS DESIGNS AND OTHER INFORMATION WHICH ARE THE PROPERTY OF THE MEDICAL RESEARCH GROUP, INC. THIS DRAWING, AND THE DESIGNS AND OTHER INFORMATION CONTAINED HEREIN, MAY NOT, IN WHOLE OR IN PART, BE DUPLICATED OR DISCLOSED OR USED FOR THE MANUFACTURE OF THE PART DISCLOSED HEREIN OR FOR ANY OTHER PURPOSE WITHOUT THE PRIOR WRITTEN PERMISSION OF THE MEDICAL RESEARCH GROUP, INC.

REV	DESCRIPTION	DATE	DRAWN	CHECKED	APPROVED
A	SEE DAR # 02079-08	03/21/02	J. S.		

QUALITY REQUIREMENTS (FOR MRG USE ONLY)

1. ASSOCIATED DOCUMENTS
   1.1. OP10-01-02

2. FIRST ARTICLE INSPECTION
   2.1. AS INDICATED ON PURCHASE ORDER OR IF NO APPROVED FIRST ARTICLE EXIST IN R.I. FILES.

3. INSPECTION (SAMPLE SIZE- TAKE THREE (3) SAMPLES 1 PC. FROM TOP, 1 PC. FROM MIDDLE, AND 1 PC. FROM BOTTOM OF PACKAGE.)
   3.1. VERIFY SHIPPING BOXES AND PACKAGING ARE UNDAMAGED
   3.2. VERIFY NOTES 4 AND 7.

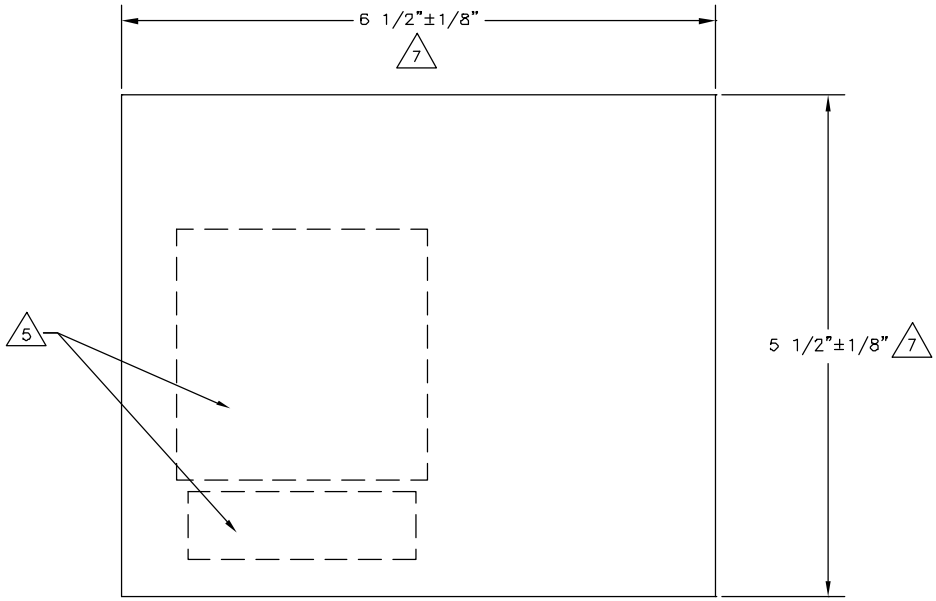

7 IF LABELS ARE PRECUT, INSPECT TO THESE DIMENSIONS. FOR EASE IN MANUFACTURING, LABELS MAY BE PRINTED SEVERAL TO A SHEET AND CUT TO THESE DIMENSIONS AFTER TYPING.

6. TITLE TO BE WHITE ON BLACK.

5 ENTER THE FOLLOWING INFORMATION. METHOD OPTIONAL.
- SERIAL NO.
- DATE OF MANUFACTURE
- LOT NO.
- EXPIRATION DATE
- STROKE VOLUME

4 DRAWING SHOWN FOR EXAMPLE ONLY. FABRICATE PER CF6021077REVA INSPECT PER 6021077 REV A. FOR SPECIFIC ARTWORK NO. SEE TABLE 1.

3. COPY TO BE CENTERED AND SQUARED WITH ARTWORK.

2. ALL COPY TO BE BLACK ON WHITE.

1. MATERIAL: KANZAKI SPECIALTY PAPER PART NO 6518 FASSON CRACK AND PEEL SATIN LITHO OR EQUIVALENT.

NOTES: UNLESS OTHERWISE SPECIFIED

TABULATION 1 4

PART NO.	ARTWORK PART NO.	MODEL NO.
6021077-001	CF6021077-001REVA	MMT-2007C WITH INVESTIGATIONAL USE NOTE

MATERIAL:	
SEE NOTE 1	
	7091029-001
NONE	7091016-001
NEXT ASSY	USED ON

UNLESS OTHERWISE SPECIFIED
ALL DIMS ARE IN INCHES
ALL DIMS APPLY AFTER FINISH
TOLERANCES ARE:
DECIMAL .X ±.015
.XX ±.010
.XXX ±.005
ANGLES ±1°
FRACTIONS ±1/64
SURFACE FINISH PER ANSI-B46-1 32
BREAK ALL EDGES .005 MAX
FILLET RADII .005 MAX

DRAWN	DATE
J. SHALLEN	03/21/02
CHECKED	DATE
APPROVED	DATE

MEDICAL RESEARCH GROUP
12744 San Fernando Rd., Sylmar, CA. 91342
Tel. (818) 362-8084 • Fax (818) 364-2647

TITLE: LABEL, BOX, MMT-2007

DO NOT SCALE DRAWING
SCALE 1/1 SHEET 1 OF 2 SIZE C DWG NO. 6021077 REV A

9191031-001 REV: B