FCC SAR Test Report

Equipment	:	**Rugged Tablet Computer**
Brand Name	:	**AAEON**
Model No.	:	**xRTC-700Mx (x - Where x may be any combination of alphanumeric characters or "-"or blank.)**
FCC ID	:	**OHBRTC700MWBGH**
Standard	:	**FCC 47 CFR Part 2 (2.1093) ANSI/IEEE C95.1-1992 IEEE 1528-2013**
Applicant Manufacturer	:	**AAEON Technology Inc. 5F, No. 135, Lane 235, Pao Chiao Rd.,Taipei, Taiwan**

The product sample received on May 16, 2016 and completely tested on July 01, 2016. We, SPORTON INTERNATIONAL INC., would like to declare that the tested sample has been evaluated in accordance with the procedures and shown the compliance with the applicable technical standards.

The test results in this report apply exclusively to the tested model / sample. Without written approval of SPORTON INTERNATIONAL INC., the test report shall not be reproduced except in full.

Reviewed by:

Kevin Liang / Assistant Manager

Testing Laboratory
1190

Table of Contents

1 STATEMENT OF COMPLIANCE 5

1.1 Guidance Standard 5
1.2 Testing Location Information 6
1.3 Device Category and SAR Limits 7

2 EQUIPMENT UNDER TEST (EUT) INFORMATION 8

2.1 General Information 8

3 RF EXPOSURE LIMITS 9

3.1 Uncontrolled Environment 9
3.2 Controlled Environment 9

4 SPECIFIC ABSORPTION RATE (SAR) 10

4.1 Introduction 10
4.2 SAR Definition 10

5 SYSTEM DESCRIPTION AND SETUP 11

5.1 E-Field Probe 12
5.2 E-Field Probe Specification 12
5.3 E-Field Probe Calibration 13
5.4 Data Acquisition Electronics (DAE) 13
5.5 Robot 14
5.6 Measurement Server 15
5.7 Phantom 16
5.8 Device Holder 17

6 MEASUREMENT PROCEDURES 18

6.1 Spatial Peak SAR Evaluation 19
6.2 Power Reference Measurement 20
6.3 Area Scan 20
6.4 Zoom Scan 21
6.5 Volume Scan Procedures 22
6.6 Power Drift Monitoring 22

7 TEST EQUIPMENT LIST 23

8 SYSTEM VERIFICATION 24

8.1 Tissue Simulating Liquids 24
8.2 Tissue Verification 26
8.3 System Performance Check Results 27

9 WWAN CONDUCTED POWER (UNIT: DBM) 28

10 WLAN CONDUCTED POWER (UNIT: DBM) 29

11 ANTENNA LOCATION 31

12 SAR EXCLUSION CALCULATIONS 32

13 SAR TEST RESULTS 34

14 BODY SAR 35

15 UNCERTAINTY ASSESSMENT 37

16 REFERENCES 40

APPENDIX A. PLOTS OF SYSTEM PERFORMANCE CHECK

APPENDIX B. PLOTS OF SAR MEASUREMENT

APPENDIX C. DASY CALIBRATION CERTIFICATE

APPENDIX D. TEST SETUP PHOTOS

Revision History

Report No.	Version	Description	Issued Date
FA650627	Rev. 01	Initial issue of report	**July 01, 2016**

1 Statement of Compliance

The maximum results of Specific Absorption Rate (SAR) found during testing as follows.

Exposure Position	Frequency Band	Reported 1g SAR (W/kg)	Equipment Class
Body-worn	WCDMA Band V	0.29	PCE
	WCDMA Band II	1.38	
	WLAN2.4GHz Band	0.64	DTS

This device is in compliance with Specific Absorption Rate (SAR) for general population/uncontrolled exposure limits (1.6 W/kg) specified in FCC 47 CFR part 2 (2.1093) and ANSI/IEEE C95.1-1992, and had been tested in accordance with the measurement methods and procedures specified in IEEE 1528-2013.

1.1 Guidance Standard

The Specific Absorption Rate (SAR) testing specification, method, and procedure for this device is in accordance with the following standards:

- FCC 47 CFR Part 2 (2.1093)
- ANSI/IEEE C95.1-1992
- IEEE 1528-2013
- FCC KDB 865664 D01 SAR Measurement 100 MHz to 6 GHz v01r04
- FCC KDB 865664 D02 SAR Reporting v01r02
- FCC KDB 447498 D01 General RF Exposure Guidance v06
- FCC KDB 616217 D04 SAR for laptop and tablets v01r02
- FCC KDB 248227 D01 For IEEE802.11(Wi-Fi)Transmitters v02r02
- FCC KDB 941225 D01 3G SAR Procedures v03r01

1.2 Testing Location Information

Testing Laboratory	
Test Site	SPORTON INTERNATIONAL INC.
Test site Location	WEN SAN
Address	No 14-1,Lane 19,Wen San 3rd St. Kwei-Shan Hsiang, Tao Yuan City, Taiwan, R.O.C.
Contact Information	TEL : +886-3-318-0787 FAX : +886-3-318-0287

Customer Information		
Applicant	Company Name	AAEON Technology Inc.
	Company Address	5F, No. 135, Lane 235, Pao Chiao Rd.,Taipei, Taiwan

Customer Information		
Manufacturer	Company Name	AAEON Technology Inc.
	Company Address	5F, No. 135, Lane 235, Pao Chiao Rd.,Taipei, Taiwan

1.3 Device Category and SAR Limits

This device belongs to portable device category because its radiating structure is allowed to be used within 20 centimeters of the body of the user. Limit for General Population/Uncontrolled exposure should be applied for this device, it is 1.6W/kg as averaged over any 1 gram of tissue.

1.3.1 Test Conditions

Ambient Temperature	20 to 24 ℃
Humidity	< 60%

1.3.2 Test Configuration

During WLAN SAR testing EUT is configured with the WLAN continuous TX tool, and the transmission duty factor was monitored on the spectrum analyzer with zero-span setting Duty factor observed as below:

- 802.11b, 1Mbps : 100%
- 802.11g, 6Mbps : 100%
- 802.11n, MCS0 : 100%

For WLAN SAR testing, WLAN engineering testing software installed on the Support Notebook can provide continuous transmitting RF signal.

2 Equipment Under Test (EUT) Information

2.1 General Information

Product Feature & Specification				
Equipment Name	Rugged Tablet Computer			
Brand Name	AAEON			
Model Name	xRTC-700Mx (x - Where x may be any combination of alphanumeric characters or "-"or blank.)			
FCC ID	OHBRTC700MWBGH			
Antenna Type	WWAN Antenna:	PIFA Antenna	WLAN Antenna:	Dipole Antenna
Antenna Gain(dBi)	WWAN Antenna :	WCDMA II : -5.4 , WCDMA V : -3.39		
	WLAN Antenna	2.4G: -3.58		
Wireless Technology and Frequency Range	WCDMA Band II : 1852.4 MHz ~ 1907.6 MHz WCDMA Band V : 826.4 MHz ~ 846.6 MHz WLAN 2.4GHz Band : 2412 MHz ~ 2462 MHz Bluetooth : 2402 MHZ ~ 2480 MHZ			
Uplink Modulations	WCDMA : QPSK 802.11b : DSSS 802.11g/n : OFDM Bluetooth : GFSK			
EUT Stage	Production Unit			

	Specification of Accessory				
Accessories or 2nd Source or Key Part	AC Adapter 1	Brand Name	FSP	Model Name	FSP036-RBBN2
		Power Rating	I/P:100 - 240 Vac, 1.2A, O/P:12Vdc, 3 A		
		Power Cord	meter, non-shielded cable, with w/o ferrite core		
	Battery 1	Brand Name	Getac	Model Name	RTC600S
		Power Rating	7.4Vdc,1530 mAh	Type	Li-ion, 2S1P
	Battery 2	Brand Name	Getac	Model Name	RTC600H
		Power Rating	7.4Vdc,1530 mAh	Type	Li-ion, 2S1P
	LCD Panel	Brand Name	INNOLUX	Model Name	.N070ICG-LD1

3 RF Exposure Limits

3.1 Uncontrolled Environment

Uncontrolled Environments are defined as locations where there is the exposure of individuals who have no knowledge or control of their exposure. The general population/uncontrolled exposure limits are applicable to situations in which the general public may be exposed or in which persons who are exposed as a consequence of their employment may not be made fully aware of the potential for exposure or cannot exercise control over their exposure. Members of the general public would come under this category when exposure is not employment-related; for example, in the case of a wireless transmitter that exposes persons in its vicinity.

3.2 Controlled Environment

Controlled Environments are defined as locations where there is exposure that may be incurred by persons who are aware of the potential for exposure, (i.e. as a result of employment or occupation). In general, occupational/controlled exposure limits are applicable to situations in which persons are exposed as a consequence of their employment, who have been made fully aware of the potential for exposure and can exercise control over their exposure. The exposure category is also applicable when the exposure is of a transient nature due to incidental passage through a location where the exposure levels may be higher than the general population/uncontrolled limits, but the exposed person is fully aware of the potential for exposure and can exercise control over his or her exposure by leaving the area or by some other appropriate means.

Limits for Occupational/Controlled Exposure (W/kg)

Whole-Body	Partial-Body	Hands, Wrists, Feet and Ankles
0.4	8.0	20.0

Limits for General Population/Uncontrolled Exposure (W/kg)

Whole-Body	Partial-Body	Hands, Wrists, Feet and Ankles
0.08	1.6	4.0

Whole-Body SAR is averaged over the entire body, partial-body SAR is averaged over any 1gram of tissue defined as a tissue volume in the shape of a cube. SAR for hands, wrists, feet and ankles is averaged over any 10 grams of tissue defined as a tissue volume in the shape of a cube.

4 Specific Absorption Rate (SAR)

4.1 Introduction

SAR is related to the rate at which energy is absorbed per unit mass in an object exposed to a radio field. The SAR distribution in a biological body is complicated and is usually carried out by experimental techniques or numerical modeling. The standard recommends limits for two tiers of groups, occupational/controlled and general population/uncontrolled, based on a person's awareness and ability to exercise control over his or her exposure. In general, occupational/controlled exposure limits are higher than the limits for general population/uncontrolled.

4.2 SAR Definition

The SAR definition is the time derivative (rate) of the incremental energy (dW) absorbed by (dissipated in) an incremental mass (dm) contained in a volume element (dv) of a given density (ρ). The equation description is as below:

$$\mathbf{SAR} = \frac{\mathbf{d}}{\mathbf{dt}}\left(\frac{\mathbf{dW}}{\mathbf{dm}}\right) = \frac{\mathbf{d}}{\mathbf{dt}}\left(\frac{\mathbf{dW}}{\boldsymbol{\rho}\mathbf{dv}}\right)$$

SAR is expressed in units of Watts per kilogram (W/kg)

$$\mathbf{SAR} = \frac{\boldsymbol{\sigma}|\mathbf{E}|^2}{\boldsymbol{\rho}}$$

Where: σ is the conductivity of the tissue, ρ is the mass density of the tissue and E is the RMS electrical field strength.

5 System Description and Setup

The DASY system used for performing compliance tests consists of the following items:

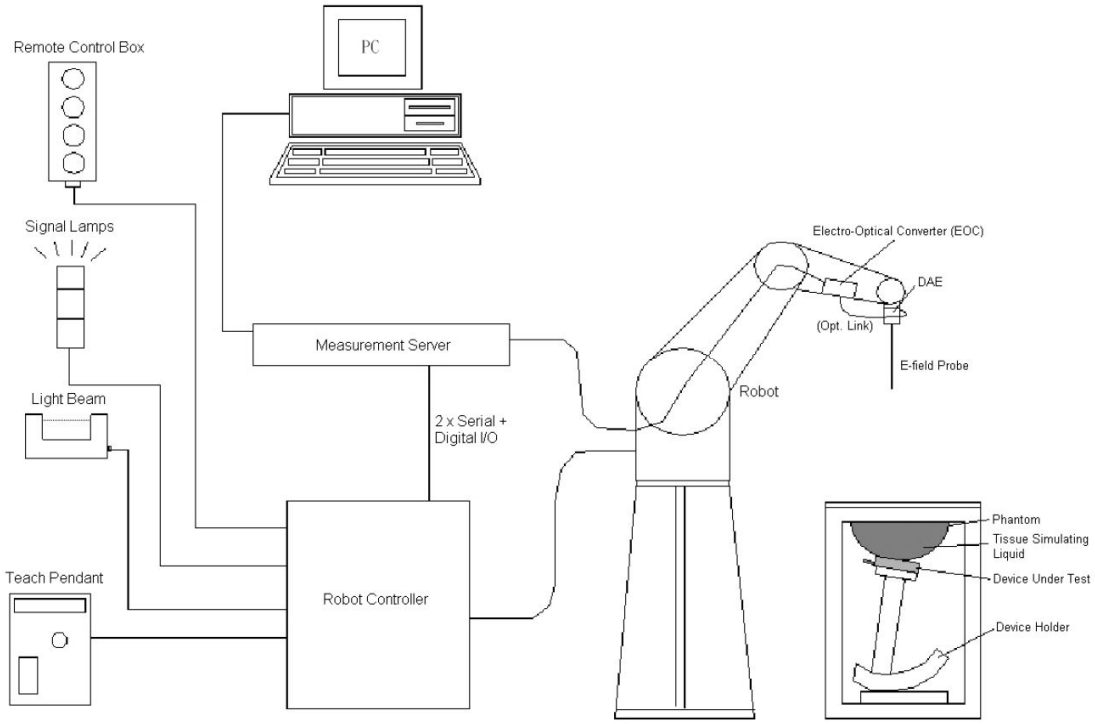

- A standard high precision 6-axis robot with controller, teach pendant and software. An arm extension for accommodating the data acquisition electronics (DAE).
- An isotropic Field probe optimized and calibrated for the targeted measurement.
- A data acquisition electronics (DAE) which performs the signal amplification, signal multiplexing, AD-conversion, offset measurements, mechanical surface detection, collision detection, etc. The unit is battery powered with standard or rechargeable batteries. The signal is optically transmitted to the EOC.
- The Electro-optical converter (EOC) performs the conversion from optical to electrical signals for the digital communication to the DAE. To use optical surface detection, a special version of the EOC is required. The EOC signal is transmitted to the measurement server.
- The function of the measurement server is to perform the time critical tasks such as signal filtering, control of the robot operation and fast movement interrupts.
- The Light Beam used is for probe alignment. This improves the (absolute) accuracy of the probe positioning.
- A computer running WinXP or Win7 and the DASY5 software.
- Remote control and teach pendant as well as additional circuitry for robot safety such as warning lamps, etc.
- The phantom, the device holder and other accessories according to the targeted measurement.

5.1 E-Field Probe

The SAR measurement is conducted with the dosimetric probe (manufactured by SPEAG).The probe is specially designed and calibrated for use in liquid with high permittivity. The dosimetric probe has special calibration in liquid at different frequency. This probe has a built in optical surface detection system to prevent from collision with phantom.

5.2 E-Field Probe Specification

<EX3DV4 Probe>

Construction	Symmetrical design with triangular core Built-in shielding against static charges PEEK enclosure material (resistant to organic solvents, e.g., DGBE)
Frequency	10 MHz to 6 GHz; Linearity: ± 0.2 dB
Directivity	± 0.3 dB in HSL (rotation around probe axis) ± 0.5 dB in tissue material (rotation normal to probe axis)
Dynamic Range	10 µW/g to 100 mW/g; Linearity: ± 0.2 dB (noise: typically < 1 µW/g)
Dimensions	Overall length: 330 mm (Tip: 20 mm) Tip diameter: 2.5 mm (Body: 12 mm) Typical distance from probe tip to dipole centers: 1 mm

5.3 E-Field Probe Calibration

Each probe needs to be calibrated according to a dosimetric assessment procedure with accuracy better than ± 10%. The spherical isotropy shall be evaluated and within ± 0.25dB. The sensitivity parameters (NormX, NormY, and NormZ), the diode compression parameter (DCP) and the conversion factor (ConvF) of the probe are tested. The calibration data can be referred to appendix C of this report.

5.4 Data Acquisition Electronics (DAE)

The data acquisition electronics (DAE) consists of a highly sensitive electrometer-grade preamplifier with auto-zeroing, a channel and gain-switching multiplexer, a fast 16 bit AD-converter and a command decoder and control logic unit. Transmission to the measurement server is accomplished through an optical downlink for data and status information as well as an optical uplink for commands and the clock. The input impedance of the DAE is 200 MOhm; the inputs are symmetrical and floating. Common mode rejection is above 80 dB.

5.5 Robot

The SPEAG DASY system uses the high precision robots (DASY4: RX90BL; DASY5: TX90XL) type from Stäubli SA (France). The Stäubli robot series have many features that are important for our application:

- High precision (repeatability ±0.035 mm)
- High reliability (industrial design)
- Jerk-free straight movements
- Low ELF interference (the closed metallic construction shields against motor control fields)

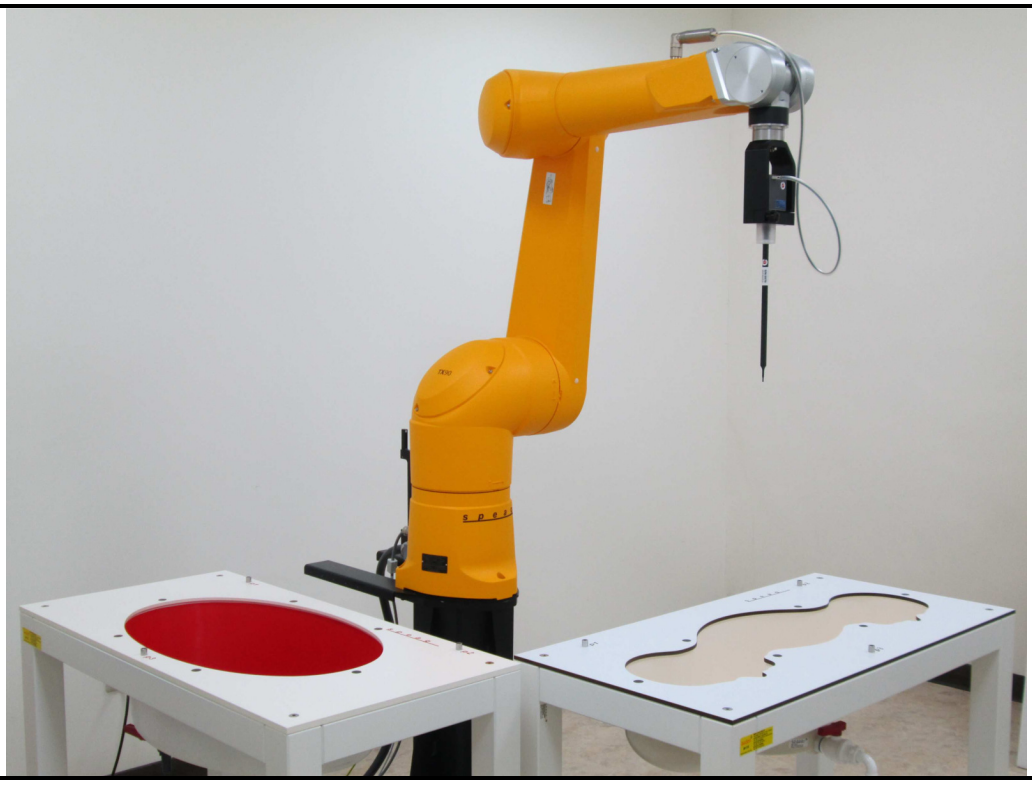

5.6 Measurement Server

The measurement server is based on a PC/104 CPU board with CPU (DASY5: 400 MHz, Intel Celeron), chipdisk (DASY5: 128 MB), RAM (DASY5: 128 MB). The necessary circuits for communication with the DAE electronic box, as well as the 16 bit AD converter system for optical detection and digital I/O interface are contained on the DASY I/O board, which is directly connected to the PC/104 bus of the CPU board. The measurement server performs all the real-time data evaluation for field measurements and surface detection, controls robot movements and handles safety operations.

5.7 Phantom

Shell Thickness	2 ± 0.2 mm (6 ± 0.2 mm at ear point)
Filling Volume	Approx. 25 liters
Dimensions	Major ellipse axis: 1000 mm Minor axis: 500 mm

The bottom plate contains three pair of bolts of locking the device holder. The device holder positions are adjusted to the standard measurement positions in the three sections. A white cover is provided to tap the phantom during off-periods to prevent water evaporation and changes in the liquid parameters. On the phantom top, three reference makers are provided to identify the phantom position with respect to the robot.

Shell Thickness	2 ± 0.2 mm (bottom plate)
Filling Volume	Approx. 30 liters
Dimensions	Major ellipse axis: 600 mm Minor axis: 400 mm

The ELI phantom is intended for compliance testing of handheld and body-mounted wireless devices in the frequency range of 30 MHz to 6 GHz. ELI is fully compatible with standard and all known tissue simulating liquids.

5.8 Device Holder

<Mounting Device for Hand-Held Transmitter>

In combination with the Twin SAM V5.0/V5.0c or ELI phantoms, the Mounting Device for Hand-Held Transmitters enables rotation of the mounted transmitter device to specified spherical coordinates.
At the heads, the rotation axis is at the ear opening. Transmitter devices can be easily and accurately positioned according to IEC 62209-1, IEEE 1528, FCC, or other specifications. The device holder can be locked for positioning at different phantom sections (left head, right head, flat). And upgrade kit to Mounting Device to enable easy mounting of wider devices like big smart-phones, e-books, small tablets, etc. It holds devices with width up to 140 mm.

Mounting Device for Hand-Held Transmitter

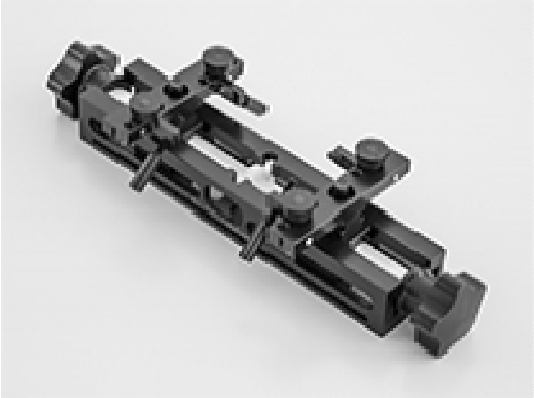

Mounting Device Adaptor for Wide-Phones

<Mounting Device for Laptop and Body-Worn Transmitter>

The extension is lightweight and made of POM, acrylic glass and foam. It fits easily on the upper part of the Mounting device in place of the phone positioned. The extension is fully compatible with the SAM Twin and ELI Phantoms.

6 Measurement Procedures

The measurement procedures are as follows:

<Conducted power measurement>

(a) For WWAN power measurement, use base station simulator to configure EUT WWAN transmission in conducted connection with RF cable, at maximum power in each supported wireless interface and frequency band.
(b) Read the WWAN RF power level from the base station simulator.
(c) For WLAN/BT power measurement, use engineering software to configure EUT WLAN/BT continuously transmission, at maximum RF power in each supported wireless interface and frequency band.
(d) Connect EUT RF port through RF cable to the power meter, and measure WLAN/BT output power.

<SAR measurement>

(a) Use base station simulator to configure EUT WWAN transmission in radiated connection, and engineering software to configure EUT WLAN/BT continuously transmission, at maximum RF power, in the highest power channel.
(b) Place the EUT in the positions as Appendix D demonstrates.
(c) Set scan area, grid size and other setting on the DASY software.
(d) Measure SAR results for the highest power channel on each testing position.
(e) Find out the largest SAR result on these testing positions of each band.
(f) Measure SAR results for other channels in worst SAR testing position if the reported SAR of highest power channel is larger than 0.8 W/kg.

According to the test standard, the recommended procedure for assessing the peak spatial-average SAR value consists of the following steps:

(a) Area scan
(b) Power reference measurement
(c) Zoom scan
(d) Power drift measurement

6.1 Spatial Peak SAR Evaluation

The procedure for spatial peak SAR evaluation has been implemented according to the test standard. It can be conducted for 1g and 10g, as well as for user-specific masses. The DASY software includes all numerical procedures necessary to evaluate the spatial peak SAR value.

The base for the evaluation is a "cube" measurement. The measured volume must include the 1g and 10g cubes with the highest averaged SAR values. For that purpose, the center of the measured volume is aligned to the interpolated peak SAR value of a previously performed area scan.

The entire evaluation of the spatial peak values is performed within the post-processing engine (SEMCAD). The system always gives the maximum values for the 1g and 10g cubes. The algorithm to find the cube with highest averaged SAR is divided into the following stages:

(a) Extraction of the measured data (grid and values) from the Zoom Scan
(g) Calculation of the SAR value at every measurement point based on all stored data (A/D values and measurement parameters)
(b) Generation of a high-resolution mesh within the measured volume
(c) Interpolation of all measured values form the measurement grid to the high-resolution grid
(d) Extrapolation of the entire 3-D field distribution to the phantom surface over the distance from sensor to surface
(e) Calculation of the averaged SAR within masses of 1g and 10g

6.2 Power Reference Measurement

The Power Reference Measurement and Power Drift Measurements are for monitoring the power drift of the device under test in the batch process. The minimum distance of probe sensors to surface determines the closest measurement point to phantom surface. This distance cannot be smaller than the distance of sensor calibration points to probe tip as defined in the probe properties.

6.3 Area Scan

The area scan is used as a fast scan in two dimensions to find the area of high field values, before doing a fine measurement around the hot spot. The sophisticated interpolation routines implemented in DASY software can find the maximum found in the scanned area, within a range of the global maximum. The range (in dB0 is specified in the standards for compliance testing. For example, a 2 dB range is required in IEEE standard 1528 and IEC 62209 standards, whereby 3 dB is a requirement when compliance is assessed in accordance with the ARIB standard (Japan), if only one zoom scan follows the area scan, then only the absolute maximum will be taken as reference. For cases where multiple maximums are detected, the number of zoom scans has to be increased accordingly.

Area scan parameters extracted from FCC KDB 865664 SAR measurement 100 MHz to 6 GHz

	≤ 3 GHz	> 3 GHz
Maximum distance from closest measurement point (geometric center of probe sensors) to phantom surface	5 ± 1 mm	½·δ·ln(2) ± 0.5 mm
Maximum probe angle from probe axis to phantom surface normal at the measurement location	30° ± 1°	20° ± 1°
Maximum area scan spatial resolution: Δx_{Area}, Δy_{Area}	≤ 2 GHz: ≤ 15 mm 2 – 3 GHz: ≤ 12 mm	3 – 4 GHz: ≤ 12 mm 4 – 6 GHz: ≤ 10 mm
	When the x or y dimension of the test device, in the measurement plane orientation, is smaller than the above, the measurement resolution must be ≤ the corresponding x or y dimension of the test device with at least one measurement point on the test device.	

6.4 Zoom Scan

Zoom scans are used assess the peak spatial SAR values within a cubic averaging volume containing 1 gram and 10 gram of simulated tissue. The zoom scan measures points (refer to table below) within a cube shoes base faces are centered on the maxima found in a preceding area scan job within the same procedure. When the measurement is done, the zoom scan evaluates the averaged SAR for 1 gram and 10 gram and displays these values next to the job's label.

Zoom scan parameters extracted from FCC KDB 865664 SAR measurement 100 MHz to 6 GHz.

			≤ 3 GHz	> 3 GHz
Maximum zoom scan spatial resolution: Δx_{Zoom}, Δy_{Zoom}			≤ 2 GHz: ≤ 8 mm 2 – 3 GHz: ≤ 5 mm*	3 – 4 GHz: ≤ 5 mm* 4 – 6 GHz: ≤ 4 mm*
Maximum zoom scan spatial resolution, normal to phantom surface	uniform grid: $\Delta z_{Zoom}(n)$		≤ 5 mm	3 – 4 GHz: ≤ 4 mm 4 – 5 GHz: ≤ 3 mm 5 – 6 GHz: ≤ 2 mm
	graded grid	$\Delta z_{Zoom}(1)$: between 1st two points closest to phantom surface	≤ 4 mm	3 – 4 GHz: ≤ 3 mm 4 – 5 GHz: ≤ 2.5 mm 5 – 6 GHz: ≤ 2 mm
		$\Delta z_{Zoom}(n>1)$: between subsequent points	$\leq 1.5 \cdot \Delta z_{Zoom}(n-1)$	
Minimum zoom scan volume	x, y, z		≥ 30 mm	3 – 4 GHz: ≥ 28 mm 4 – 5 GHz: ≥ 25 mm 5 – 6 GHz: ≥ 22 mm

Note: δ is the penetration depth of a plane-wave at normal incidence to the tissue medium; see draft standard IEEE P1528-2011 for details.

* When zoom scan is required and the *reported* SAR from the *area scan based 1-g SAR estimation* procedures of KDB 447498 is ≤ 1.4 W/kg, ≤ 8 mm, ≤ 7 mm and ≤ 5 mm zoom scan resolution may be applied, respectively, for 2 GHz to 3 GHz, 3 GHz to 4 GHz and 4 GHz to 6 GHz.

6.5 Volume Scan Procedures

The volume scan is used for assess overlapping SAR distributions for antennas transmitting in different frequency bands. It is equivalent to an oversized zoom scan used in standalone measurements. The measurement volume will be used to enclose all the simultaneous transmitting antennas. For antennas transmitting simultaneously in different frequency bands, the volume scan is measured separately in each frequency band. In order to sum correctly to compute the 1g aggregate SAR, the EUT remain in the same test position for all measurements and all volume scan use the same spatial resolution and grid spacing. When all volume scan were completed, the software, SEMCAD postprocessor can combine and subsequently superpose these measurement data to calculating the multiband SAR.

6.6 Power Drift Monitoring

All SAR testing is under the EUT install full charged battery and transmit maximum output power. In DASY measurement software, the power reference measurement and power drift measurement procedures are used for monitoring the power drift of EUT during SAR test. Both these procedures measure the field at a specified reference position before and after the SAR testing. The software will calculate the field difference in dB. If the power drifts more than 5%, the SAR will be retested.

7 Test Equipment List

Manufacturer	Name of Equipment	Type/Model	Serial Number	Calibration	
				Last Cal.	Due Date
SPEAG	Data Acquisition Electronics	DAE4	1424	2016/2/16	2017/2/15
SPEAG	Dosimetric E-Field Probe	EX3DV4	3976	2016/2/22	2017/2/21
SPEAG	835MHz System Validation Kit	D835V2	4d167	2016/2/16	2017/2/15
SPEAG	1900MHz System Validation Kit	D1900V2	5d185	2016/2/15	2017/2/14
SPEAG	2450MHz System Validation Kit	D2450V2	929	2016/2/9	2017/2/8
SPEAG	Device Holder	N/A	N/A	NCR	NCR
Mini-Circuits	Power Amplifier	ZHL-42W+	15542	NCR	NCR
Mini-Circuits	Power Amplifier	ZVE-8G+	605601404	NCR	NCR
Agilent	ENA Series Network Analyzer	E5071C	MY46419201	2016/1/21	2017/1/20
Agilent	EXA Signal Analyzer	N9010A	MY54200432	2015/8/12	2016/8/11
Agilent	Wireless communication test Set	8960	MY53202225	2015/7/6	2016/7/5
Keysight	MXG-B RF Vector Signal Generator	N5182B	MY53051912	2015/10/13	2016/10/12
SPEAG	Dielectric Probe Kit	SM DAK 040CA	1146	NCR	NCR
Anritsu	Power Meter	ML2495A	1124009	2016/2/22	2017/2/21
Anritsu	Power sensor	MA2411B	1027452	2016/2/22	2017/2/21
Anritsu	Power Meter	ML2495A	0949003	2016/2/4	2017/2/3
Anritsu	Power sensor	MA2411B	0917017	2016/2/4	2017/2/3
SPEAG	Flat Phantom ELI5.0	QD OVA 002 AA	1238	NCR	NCR
Wisewind	Themometer	HTC1	HTC1	2015/12/24	2016/12/23
Wisewind	Themometer	YF-160A	130504609	2015/12/24	2016/12/23

General Note:

1. The calibration certificate of DASY can be referred to appendix C of this report.
2. The Insertion Loss calibration of Dual Directional Coupler and Attenuator were characterized via the network analyzer and compensated during system check.
3. In system check we need to monitor the level on the power meter, and adjust the power amplifier level to have precise power level to the dipole; the measured SAR will be normalized to 1W input power according to the ratio of 1W to the input power to the dipole. For system check, the calibration of the power amplifier is deemed not critically required for correct measurement; the power meter is critical and we do have calibration for it
4. Attenuator 1 insertion loss is calibrated by the network Analyzer, which the calibration is valid, before system check.
5. NCR: No calibration request.

8 System Verification

8.1 Tissue Simulating Liquids

For the measurement of the field distribution inside the phantom with DASY, the phantom must be filled with around 25 liters of homogeneous body tissue simulating liquid. For body SAR testing, the liquid height from the center of the flat phantom to the liquid top surface is larger than 15 cm and 10 cm, which is shown in Fig. 8.1. & 8.2.& 8.3.

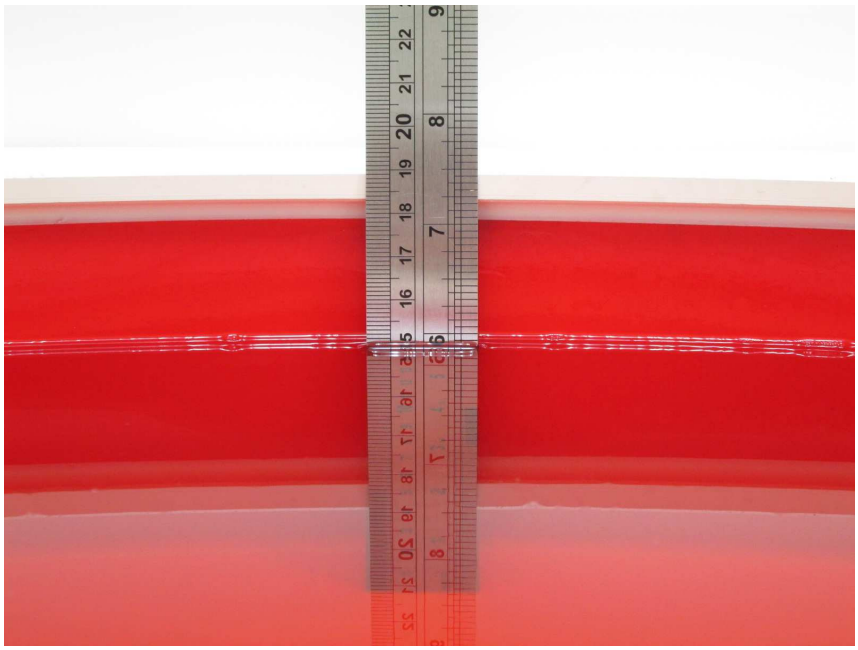

Fig 8.1 Photo of Liquid Height for Body Frequency 850MHz

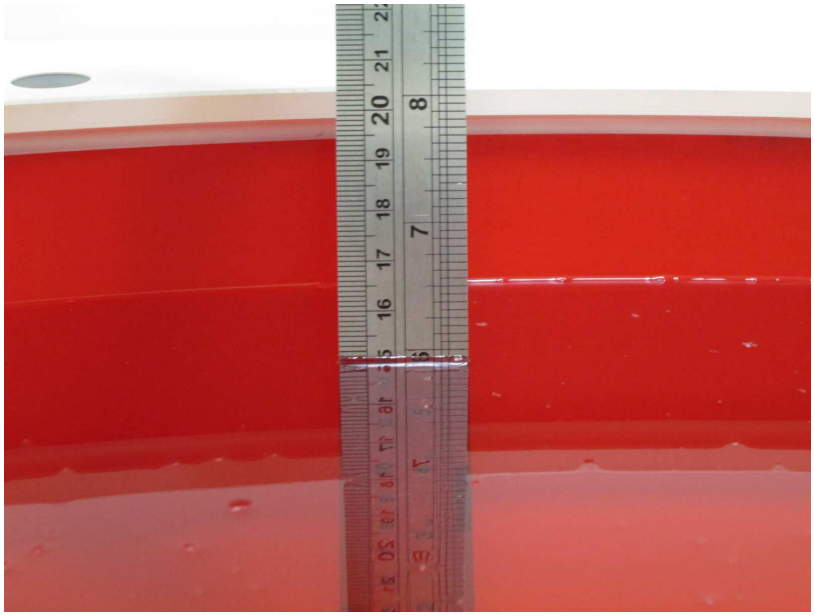

Fig 8.2 Photo of Liquid Height for Body Frequency 1900MHz

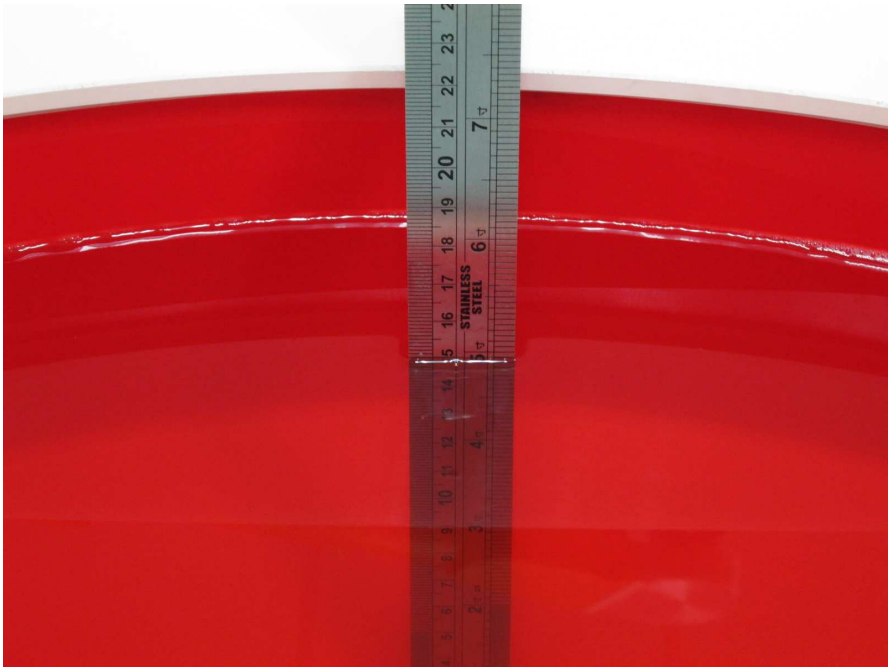

Fig 8.3 Photo of Liquid Height for Body Frequency 2450MHz

8.2 Tissue Verification

The following tissue formulations are provided for reference only as some of the parameters have not been thoroughly verified. The composition of ingredients may be modified accordingly to achieve the desired target tissue parameters required for routine SAR evaluation.

Frequency (MHz)	Water (%)	Sugar (%)	Cellulose (%)	Salt (%)	Preventol (%)	DGBE (%)	Conductivity (σ)	Permittivity (εr)
For Body								
750	51.7	47.2	0	0.9	0.1	0	0.96	55.5
835	50.8	48.2	0	0.9	0.1	0	0.97	55.2
900	50.8	48.2	0	0.9	0.1	0	1.05	55.0
1750	70.2	0	0	0.4	0	29.4	1.52	53.3
1900	70.2	0	0	0.4	0	29.4	1.52	53.3
2000	70.2	0	0	0.4	0	29.4	1.52	53.3
2450	68.6	0	0	0	0	31.4	1.95	52.7
2600	68.1	0	0	0.1	0	31.8	2.16	52.5

Simulating Liquid for 5GHz, Manufactured by SPEAG

Ingredients	(% by weight)
Water	64~78%
Mineral oil	11~18%
Emulsifiers	9~15%
Additives and Salt	2~3%

<Tissue Dielectric Parameter Check Results>

Frequency (MHz)	Liquid Temp. (℃)	Conductivity (σ)	Permittivity (εr)	Conductivity Target (σ)	Permittivity Target (εr)	Delta (σ) (%)	Delta (εr) (%)	Limit (%)	Date
835	22.5	0.996	56.534	0.97	55.2	2.68	2.42	±5	2016/6/7
1900	22.3	1.533	54.1	1.52	53.3	0.86	1.50	±5	2016/6/3
2450	22.5	1.934	52.846	1.95	52.7	-0.82	0.28	±5	2016/6/7

1. The dielctric properties of the tissue is within ±5% of the target values.
2. Liquid temperature during dielectric property measurement by more than ±2 °C
3. The dielectric properties of the tissue-equivalent liquids shall be measured within 24 h before the SAR measurements.

8.3 System Performance Check Results

Comparing to the original SAR value provided by SPEAG, the verification data should be within its specification of 10 %. Below table shows the target SAR and measured SAR after normalized to 1W input power. The table below indicates the system performance check can meet the variation criterion and the plots can be referred to Appendix A of this report.

Frequency (MHz)	Input Power (mW)	Targeted SAR 1g (W/kg)	Measured SAR 1g (W/kg)	Normalized SAR 1g (W/kg)	Deviation (%)	Probe S/N	DAE S/N	Dipole S/N	Phantom	Date
835	250mW	9.57	2.21	8.84	-7.628	3976	1424	4d167	1238	2016/6/7
1900	250mW	39.9	9.84	39.36	-1.353	3976	1424	5d185	1238	2016/6/3
2450	250mW	49.8	11.9	47.60	-4.418	3976	1424	929	1238	2016/6/7

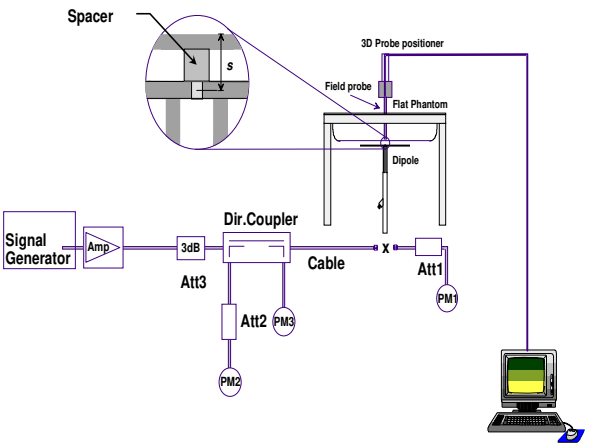

System Performance Check Setup

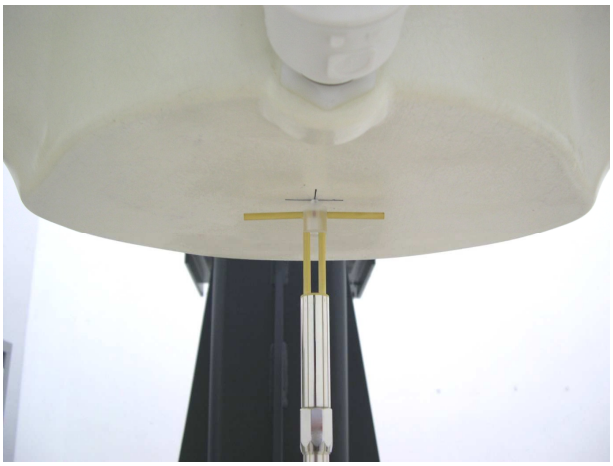

Setup Photo

.

9 WWAN Conducted Power (Unit: dBm)

<WCDMA Conducted Power>

General Note:

1. The test conducted according to the test in 3GPP TS 34.121 Specification.

2. The procedures in KDB 941225 D01v03r01 are applied for 3GPP Rel.6 HSPA to configure the device in the required sub-test mode(s) to determine SAR test exclusion.

3. For DC-HSDPA, the device was configured according to the H-Set 12, Fixed Reference Channel(FRC) configuration in Table C.8.1.12 of 3GPP TS 34.121-1, With the primary and the secondary serving HS-DSCH cell enabled during the power measurement.

4. Per KDB 941225 D01v03r01, SAR for body-worn exposure is measured using a 12.2kbps RMC with TPC bits configured to all “1’s”.

5. Per KDB 941225 D01V03r01,RMC12.2kbps setting is used to evaluate SAR. If the maximum output power and tune-up tolerance specified for production units in HSDPA / HSUPA / DC-HSDPA is ≤¼ dB higher than RMC 12.2Kbps or when the highest reported SAR of the RMC12.2Kbps is scaled by the ratio of specified maximum output power and tune-up tolerance of HSDPA / HSUPA / DC-HSDPA to RMC12.2Kbps and the adjusted SAR is 1.2 W/Kg,SAR measurement is not required for HSDPA / HSUPA / DC-HSDPA.

Band			WCDMA V			Tune up Limit (dBm)	WCDMA II			Tune up Limit (dBm)
TX Channel			4132	4182	4233		9262	9400	9538	
Frequency (MHz)			826.4	836.4	846.6		1852.4	1800	1907.6	
MPR (dB)	3GPP Rel 99	RMC12.2K	23.01	22.44	23.17	23.50	23.40	22.44	22.24	23.50
0	3GPP Rel 6	HSDPA Subtest-1	21.51	22.35	22.89	23.00	21.95	21.35	20.78	22.00
0	3GPP Rel 6	HSDPA Subtest-2	22.96	22.33	22.91	23.00	21.97	21.31	20.99	22.00
0.5	3GPP Rel 6	HSDPA Subtest-3	22.48	21.78	22.56	23.00	21.50	20.83	20.30	21.50
0.5	3GPP Rel 6	HSDPA Subtest-4	22.50	21.79	22.57	23.00	21.48	20.89	20.53	21.50
0	3GPP Rel 6	HSUPA Subtest-1	22.04	21.94	21.25	22.50	21.16	20.78	20.63	21.50
2	3GPP Rel 6	HSUPA Subtest-2	21.57	21.51	21.62	22.00	20.96	20.41	20.35	21.00
1	3GPP Rel 6	HSUPA Subtest-3	21.56	21.53	21.43	22.00	20.73	20.61	20.22	21.00
2	3GPP Rel 6	HSUPA Subtest-4	22.00	21.47	21.64	22.00	21.34	21.49	20.74	21.50
0	3GPP Rel 6	HSUPA Subtest-5	21.61	21.54	21.34	22.00	20.85	20.72	20.49	21.00

10 WLAN Conducted Power (Unit: dBm)

General Note:

1. Per KDB 242287 D01 SAR test reduction is determined according to 802.11 transmission mode configurations and certain exposure conditions with multiple test positions. In the 2.4 GHz band, separate SAR procedures are applied to DSSS and OFDM configurations to simplify DSSS test requirements. For OFDM, in both 2.4 and 5 GHz bands, an initial test configuration must be determined for each standalone and aggregated frequency band, according to the transmission mode configuration with the highest maximum output power specified for production units to perform SAR measurements. If the same highest maximum output power applies to different combinations of channel bandwidths, modulations and data rates, additional procedures (see 5.3.2) are applied to determine which test configurations require SAR measurement. When applicable, an initial test position may be applied to reduce the number of SAR measurements required for next to the ear, UMPC mini-tablet or hotspot mode configurations with multiple test positions.

2. For 2.4 GHz 802.11b DSSS, either the initial test position procedure for multiple exposure test positions or the DSSS procedure for fixed exposure position is applied; these are mutually exclusive. For 2.4 GHz and 5 GHz OFDM configurations, the initial test configuration is applied to measure SAR using either the initial test position procedure for multiple exposure test position configurations or the initial test configuration procedures for fixed exposure test conditions. Based on the *reported* SAR of the measured configurations and maximum output power of the transmission mode configurations that are not included in the initial test configuration, the subsequent test configuration and initial test position procedures are applied to determine if SAR measurements are required for the remaining OFDM transmission configurations. In general, the number of test channels that require SAR measurement is minimized based on maximum output power measured for the test sample(s).

3. For OFDM transmission configurations in the 2.4 GHz and 5 GHz bands, When the same maximum power is specified for multiple transmission modes in a frequency band, the largest channel bandwidth, lowest order modulation, lowest data rate and lowest order 802.11a/g/n/ac mode is used for SAR measurement, on the highest measured output power channel for each frequency band.

<Bluetooth>

	Mode	Channel	Frequency (MHz)	Data Rate	Average Power (dBm)	Tune up Limit (dBm)
BT	v2.1 with BR	CH 0	2402	1Mbps	6.74	8.00
		CH 39	2440		7.44	
		CH 78	2480		7.92	
	v2.1 with EDR	CH 0	2402	2Mbps	3.92	5.50
		CH 39	2440		4.62	
		CH 78	2480		5.21	
	v2.1 with EDR	CH 0	2402	3Mbps	3.94	5.50
		CH 39	2440		4.65	
		CH 78	2480		5.09	

Note:

For V2.1 With BR 2.4GHz Bluetooth SAR testing selected 1Mbps, due to its highest average power.

<2.4G>

Antenna A

	Mode	Channel	Frequency (MHz)	Data Rate	Ant A Average Power (dBm)	Tune up Limit (dBm)
2.4GHz	802.11b	CH 1	2412	1Mbps	14.06	14.50
		CH 6	2437		18.68	19.00
		CH 11	2462		18.97	19.00
	802.11g	CH 1	2412	6Mbps	16.92	17.00
		CH 6	2437		17.41	17.50
		CH 11	2462		17.44	17.50
	802.11n_HT20	CH 1	2412	MCS0	15.92	16.00
		CH 6	2437		16.32	16.50
		CH 11	2462		16.42	16.50

11 Antenna Location

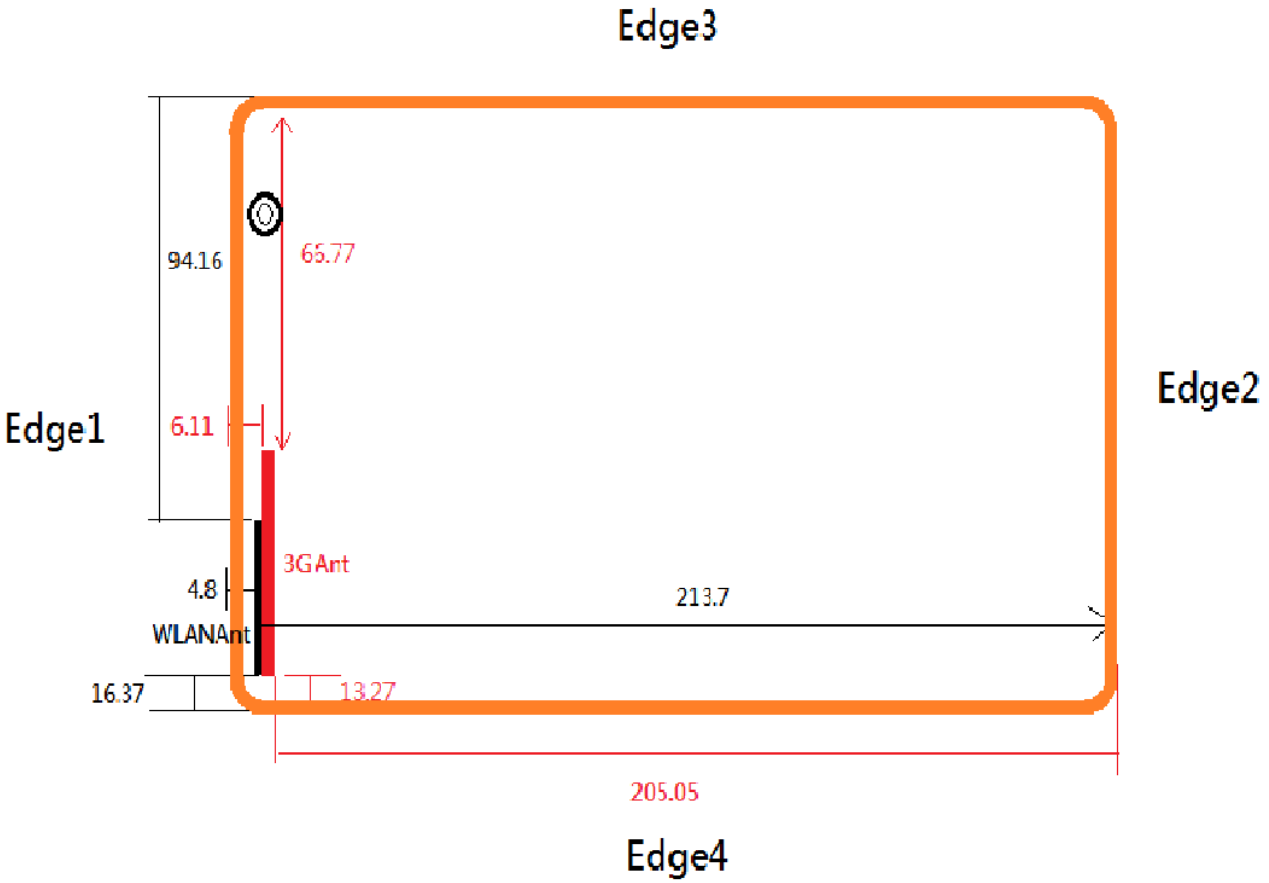

<EUT Front View>

Antenna	Edge1(mm)	Edge2(mm)	Edge3(mm)	Edge4(mm)
WLAN & BT Ant	4.8	213.7	94.16	16.37
WWAN Ant	6.11	205.05	65.77	13.27

12 SAR Exclusion Calculations

The 1-g SAR test exclusion thresholds for 100 MHz to 6 GHz at test separation distances ≤ 50 mm
[(max. pwr. of channel including tune-up tolerance, mW)/(min. test separation distance, mm)]
[√f(GHz)] ≤ 3.0 for 1-g SAR,

Where

- f(GHz) is the RF channel transmit frequency in GHz
- Power and distance are rounded to the nearest mW and mm before calculation
- The result is rounded to one decimal place for comparison

12.1 Standalone SAR Test Exclusion Considerations

The standalone SAR test exclusion procedure in KDB 447498) 4.3.1) is applied to determine the minimum test separation distance:

- The separation distance from the antenna to adjacent edge is ≦ 5mm, distance of 5mm is applied to determine SAR test exclusion.
- The Separation distance from the antenna to adjacent edge is > 5mm, the actual antenna to edge separation distance is applied to determine SAR test exclusion.
-
- For 100 MHz to 6 GHz and *test separation distances* > 50 mm, the 1-g and 10-g *SAR test exclusion thresholds* are determined by the following (also illustrated in Appendix B):32
- 1) {[Power allowed at *numeric threshold* for 50 mm in step a)] + [(test separation distance – 50 mm)·(f(MHz)/150)]} mW, for 100 MHz to 1500 MHz
- 2) {[Power allowed at *numeric threshold* for 50 mm in step a)] + [(test separation distance – 50 mm)·10]} mW, for > 1500 MHz and ≤ 6 GHz
-

12.2 SAR Test Exclusion Calculations for WWAN & WLAN

Antennas ≦ 50mm to edges (100M-6G)

Radio	Frq. (MHz)	Tune-up Power		Separation distances (mm)					Calculated Threshold(mW)				
		dBm	mW	Rear	Edge 1	Edge 2	Edge 3	Edge 4	Rear	Edge 1	Edge 2	Edge 3	Edge 4
WCDMA II	1852.4	23.40	219	5	4.8	213.7	94.16	16.37	11	11	>50 mm	>50 mm	36
WCDMA V	846.6	23.17	207	5	4.8	213.7	94.16	16.37	16	16	>50 mm	>50 mm	53
802.11b	2462	18.97	79	5	6.11	205.05	65.77	13.27	10	12	>50 mm	>50 mm	25

Antennas > 50mm to edges (100M-1500M)

Radio	Frq. (MHz)	Tune-up Power		Separation distances (mm)					Calculated Threshold(mW)				
		dBm	mW	Rear	Edge 1	Edge 2	Edge 3	Edge 4	Rear	Edge 1	Edge 2	Edge 3	Edge 4
WCDMA V	846.6	23.17	207	5	4.8	213.7	94.2	16.37	≦50 mm	≦50 mm	1087	412	≦50 mm

Antennas > 50mm to edges (1500M-6G)

Radio	Frq. (MHz)	Tune-up Power		Separation distances (mm)					Calculated Threshold(mW)				
		dBm	mW	Rear	Edge 1	Edge 2	Edge 3	Edge 4	Rear	Edge 1	Edge 2	Edge 3	Edge 4
WCDMA II	1852	23.40	219	5	4.80	213.70	94.2	16.37	≦50 mm	≦50 mm	1747	552	≦50 mm
802.11b	2462	18.97	79	5	6.11	205.05	65.8	13.27	≦50 mm	≦50 mm	1646	253	≦50 mm

12.3 SAR Test Exclusion Calculations for WWAN & WLAN

Test Configurations	Rear Face	Edge1	Edge2	Edge3	Edge4
WCDMA II	YES	YES	NO	NO	YES
WCDMA V	YES	YES	NO	NO	YES
802.11b	YES	YES	NO	NO	YES

Note:
1. Yes= SAR is required.
2. No= SAR is not required.

13 SAR Test Results

General Note:

1. Per KDB 447498, the reported SAR is the measured SAR value adjusted for maximum tune-up tolerance.
   a. Tune-up scaling Factor = tune-up limit power (mW) / EUT RF power (mW), where tune-up limit is the maximum rated power among all production units.
   b. For SAR testing of WLAN signal with non-100% duty cycle, the measured SAR is scaled-up by the duty cycle scaling factor which is equal to "1/(duty cycle)"
   c. Reported SAR(W/kg)= Measured SAR(W/kg)*Tune-up Scaling Factor

2. Per KDB 447498 for each exposure position, testing of other required channels within the operating mode of a frequency band is not required when the *reported* 1-g or 10-g SAR for the mid-band or highest output power channel is:
   - ≤ 0.8 W/kg or 2.0 W/kg, for 1-g or 10-g respectively, when the transmission band is ≤ 100 MHz
   - ≤ 0.6 W/kg or 1.5 W/kg, for 1-g or 10-g respectively, when the transmission band is between 100 MHz and 200 MHz
   - ≤ 0.4 W/kg or 1.0 W/kg, for 1-g or 10-g respectively, when the transmission band is ≥ 200 MHz

3. Per KDB 616217, the additional separation introduced by the contour against a flat phantom is < 5 mm and reported SAR is < 1.2 W/kg, a curved or contoured back surface or edge SAR is not required, more detail information please refer to the setup photo.

4. Per KDB 248227D01 v02, the Wi-Fi transmission modes include all channel bandwidth, modulation and data rate combinations for the 802.11a/g/n/ac OFDM configurations in a standalone or aggregated frequency band. For 2.4 GHz, 802.11b DSSS and 802.11g/n OFDM configurations are considered separately.

5. Per KDB 248227D01 v02 r02 ,5.1.1 Initial Test Position SAR Test Reduction Procedure.

6. When the WLAN transmission was verified using a spectrum analyzer.

14 Body SAR

<WCDMA SAR>

Plot No.	Band	Mode	Test Position	Gap (cm)	Ch.	Freq. (MHz)	Average Power (dBm)	Tune-up Limit (dBm)	Tune-up Scaling Factor	Power Drift (dB)	Measured 1g SAR (W/kg)	Reported 1g SAR (W/kg)	Note
1	WCDAM II	RMC12.2k	Rear Face	0	9262	1852.4	23.50	23.40	1.02	-0.08	0.18	0.184	
2	WCDAM II	RMC12.2k	Edge1	0	9262	1852.4	23.50	23.40	1.02	0.15	1.03	1.05	
5	WCDAM II	RMC12.2k	Edge4	0	9262	1852.4	23.50	23.40	1.02	-0.02	1.06	1.08	
6	WCDAM II	RMC12.2k	Edge4	0	9400	1880	23.50	22.44	1.28	-0.07	0.988	1.26	
7	WCDAM II	RMC12.2k	Edge4	0	9538	1907.6	23.50	22.24	1.34	-0.02	1.03	1.38	
8	WCDAM II	RMC12.2k	Edge4	0	9262	1852.4	23.50	23.40	1.02	0.04	1.05	1.07	**Repeated**
9	WCDAM V	RMC12.2k	Rear Face	0	4233	846.6	23.50	23.17	1.08	-0.06	0.051	0.06	
10	WCDAM V	RMC12.2k	Edge1	0	4233	846.6	23.50	23.17	1.08	0.05	0.273	0.29	
13	WCDAM V	RMC12.2k	Edge4	0	4233	846.6	23.50	23.17	1.08	-0.06	0.089	0.10	

Note:

SAR is performed on the highest power channel. When the reported SAR value of highest power Channel ≥ 0.8 W/kg, SAR testing for optional channel is required.

<WLAN SAR>

Plot No.	Band	Mode	Test Position	Gap (cm)	Ch.	Freq. (MHz)	Data Rate	Average Power (dBm)	Tune-up Limit (dBm)	Tune-up Scaling Factor	Power Drift (dB)	Measured 1g SAR (W/kg)	Reported 1g SAR (W/kg)
14	802.11b	-	Rear Face	0	11	2462	1M	18.97	19.00	1.01	0.15	0.02	0.02
15	802.11b	-	Edge1	0	11	2462	1M	18.97	19.00	1.01	0.06	0.633	0.64
18	802.11b	-	Edge4	0	11	2462	1M	18.97	19.00	1.01	0.07	0.041	0.0413

Note:

SAR is performed on the highest power channel. When the reported SAR value of highest power Channel ≤ 0.8 W/kg, SAR testing for optional channel is not required.

15 Uncertainty Assessment

The component of uncertainly may generally be categorized according to the methods used to evaluate them. The evaluation of uncertainly by the statistical analysis of a series of observations is termed a Type An evaluation of uncertainty. The evaluation of uncertainty by means other than the statistical analysis of a series of observation is termed a Type B evaluation of uncertainty. Each component of uncertainty, however evaluated, is represented by an estimated standard deviation, termed standard uncertainty, which is determined by the positive square root of the estimated variance.

A Type A evaluation of standard uncertainty may be based on any valid statistical method for treating data. This includes calculating the standard deviation of the mean of a series of independent observations; using the method of least squares to fit a curve to the data in order to estimate the parameter of the curve and their standard deviations; or carrying out an analysis of variance in order to identify and quantify random effects in certain kinds of measurement.

A type B evaluation of standard uncertainty is typically based on scientific judgment using all of the relevant information available. These may include previous measurement data, experience, and knowledge of the behavior and properties of relevant materials and instruments, manufacture's specification, data provided in calibration reports and uncertainties assigned to reference data taken from handbooks. Broadly speaking, the uncertainty is either obtained from an outdoor source or obtained from an assumed distribution, such as the normal distribution, rectangular or triangular distributions indicated in Table 14.1

Uncertainty Distributions	Normal	Rectangular	Triangular	U-Shape
Multi-plying Factor[(a)]	1/k[(b)]	$1/\sqrt{3}$	$1/\sqrt{6}$	$1/\sqrt{2}$

(a) standard uncertainty is determined as the product of the multiplying factor and the estimated range of variations in the measured quantity

(b) κ is the coverage factor

Standard Uncertainty for Assumed Distribution

The combined standard uncertainty of the measurement result represents the estimated standard deviation of the result. It is obtained by combining the individual standard uncertainties of both Type A and Type B evaluation using the usual "root-sum-squares" (RSS) methods of combining standard deviations by taking the positive square root of the estimated variances.

Expanded uncertainty is a measure of uncertainty that defines an interval about the measurement result within which the measured value is confidently believed to lie. It is obtained by multiplying the combined standard uncertainty by a coverage factor. Typically, the coverage factor ranges from 2 to 3. Using a coverage factor allows the true value of a measured quantity to be specified with a defined probability within the specified uncertainty range. For purpose of this document, a coverage factor two is used, which corresponds to confidence interval of about 95 %. The DASY uncertainty Budget is shown in the following tables.

Error Description	Uncertainty Value (±%)	Probability Distribution	Divisor	Ci (1g)	Standard Uncertainty (±%) (1g)
Measurement System					
Probe Calibration	6.0	Normal	1.0	1.0	6.0
Axial Isotropy	4.7	Rectangular	√3	0.7	1.9
Hemispherical Isotropy	9.6	Rectangular	√3	0.7	3.9
Boundary effects	1.0	Rectangular	√3	1.0	0.6
Linearity	4.7	Rectangular	√3	1.0	2.7
System Detection Limits	1.0	Rectangular	√3	1.0	0.6
Modulation Response	2.4	Rectangular	√3	1.0	1.4
Readout Electronics	0.3	Normal	1.0	1.0	0.3
Response Time	0.8	Rectangular	√3	1.0	0.5
Integration Time	2.6	Rectangular	√3	1.0	1.5
RF Ambient Noise	3.0	Rectangular	√3	1.0	1.7
RF Ambient Reflections	3.0	Rectangular	√3	1.0	1.7
Probe Positioner	0.4	Rectangular	√3	1.0	0.2
Probe Positioning	2.9	Rectangular	√3	1.0	1.7
Max. SAR Eval.	2.0	Rectangular	√3	1.0	1.2
Dipole Related					
Device Positioning	2.9	Normal	1.0	1.0	2.9
Device Holder	3.6	Normal	1.0	1.0	3.6
Power Drift	5.0	Rectangular	√3	1.0	2.9
Power Scaling	0.0	Rectangular	√3	1.0	0.0
Phantom and Tissue parameters					
Phantom Uncertainty	6.1	Rectangular	√3	1.0	3.5
SAR correction	1.9	Normal	1.0	1.0	1.9
Liquid Conductivity (measurement)	2.0	Normal	1.0	0.8	1.6
Liquid Permittivity (measurement)	2.1	Normal	1.0	0.3	0.5
Temp. unc. - Conduct	3.4	Rectangular	√3	0.8	1.5
Temp. unc. - Permittivity	0.4	Rectangular	√3	0.2	0.1
Combined Standard Uncertainty					11.2
Coverage Factor for 95 %					Kp=2
Expanded Uncertainty					22.4

Uncertainty Budget for frequency range 30 MHz to 3 GHz

Error Description	Uncertainty Value (±%)	Probability Distribution	Divisor	Ci (1g)	Standard Uncertainty (±%) (1g)
Measurement System					
Probe Calibration	6.0	Normal	1.0	1.0	6.6
Axial Isotropy	4.7	Rectangular	√3	0.7	1.9
Hemispherical Isotropy	9.6	Rectangular	√3	0.7	3.9
Boundary effects	1.0	Rectangular	√3	1.0	0.6
Linearity	4.7	Rectangular	√3	1.0	2.7
System Detection Limits	1.0	Rectangular	√3	1.0	0.6
Modulation Response	0.0	Rectangular	√3	1.0	0.0
Readout Electronics	0.3	Normal	1.0	1.0	0.3
Response Time	0.0	Rectangular	√3	1.0	0.0
Integration Time	2.6	Rectangular	√3	1.0	1.5
RF Ambient Noise	3.0	Rectangular	√3	1.0	1.7
RF Ambient Reflections	3.0	Rectangular	√3	1.0	1.7
Probe Positioner	0.4	Rectangular	√3	1.0	0.2
Probe Positioning	2.9	Rectangular	√3	1.0	1.7
Max. SAR Eval.	2.0	Rectangular	√3	1.0	1.2
Dipole Related					
Device Of experimental dipole	5.5	Normal	1.0	1.0	5.5
Dipole Axis to Liquid Distance	2.0	Rectangular	√3	1.0	1.2
Input Power & SAR Drift	3.4	Rectangular	√3	1.0	2.0
Phantom and Tissue parameters					
Phantom Uncertainty	6.1	Rectangular	√3	1.0	3.5
SAR correction	1.9	Normal	√3	1.0	1.1
Liquid Conductivity (measurement)	2.0	Normal	1.0	0.8	1.6
Liquid Permittivity (measurement)	2.1	Normal	1.0	0.2	0.5
Temp. unc. - Conduct	3.4	Rectangular	√3	0.8	1.5
Temp. unc. - Permittivity	0.4	Rectangular	√3	0.2	0.1
Combined Standard Uncertainty					9.2
Coverage Factor for 95 %					Kp=2
Expanded Uncertainty					18.4

Uncertainty Budget for System Validation for the 0.3-6 GHz range

16 References

[1] Federal Communications Commission, \Report and order: Guidelines for evaluating the environ-mental effects of radiofrequency radiation", Tech. Rep. FCC 96-326, FCC, Washington, D.C. 20554, 1996.

[2] David L. Means Kwok Chan, Robert F. Cleveland, \Evaluating compliance with FCC guidelines for human exposure to radiofrequency electromagnetic fields", Tech. Rep., Federal Communication Commision, O_ce of Engineering & Technology, Washington, DC, 1997.

[3] Thomas Schmid, Oliver Egger, and Niels Kuster, \Automated E-_eld scanning system for dosimetric assessments", IEEE Transactions on Microwave Theory and Techniques, vol. 44, pp. 105{113, Jan. 1996.

[4] Niels Kuster, Ralph K.astle, and Thomas Schmid, \Dosimetric evaluation of mobile communications equipment with known precision", IEICE Transactions on communications, vol. E80-B, no. 5, pp. 645{652, May 1997.

[5] CENELEC, \Considerations for evaluating of human exposure to electromagnetic fields (EMFs) from mobile telecommunication equipment (MTE) in the frequency range 30MHz - 6GHz", Tech. Rep., CENELEC, European Committee for Electro technical Standardization, Brussels, 1997.

[6] ANSI, ANSI/IEEE C95.1-1992: IEEE Standard for Safety Levels with Respect to Human Exposure to Radio Frequency Electromagnetic Fields, 3 kHz to 300 GHz, The Institute of Electrical and Electronics Engineers, Inc., New York, NY 10017, 1992.

[7] Katja Pokovic, Thomas Schmid, and Niels Kuster, \Robust setup for precise calibration of E-_eld probes in tissue simulating liquids at mobile communications frequencies", in ICECOM _ 97, Dubrovnik, October 15{17, 1997, pp. 120{124.

[8] Katja Pokovic, Thomas Schmid, and Niels Kuster, \E-_eld probe with improved isotropy in brain simulating liquids", in Proceedings of the ELMAR, Zadar, Croatia, 23{25 June, 1996, pp. 172{175.

[9] Volker Hombach, Klaus Meier, Michael Burkhardt, Eberhard K. uhn, and Niels Kuster, \The dependence of EM energy absorption upon human head modeling at 900 MHz", IEEE Transactions on Microwave Theory and Techniques, vol. 44, no. 10, pp. 1865{1873, Oct. 1996.

[10] Klaus Meier, Ralf Kastle, Volker Hombach, Roger Tay, and Niels Kuster, \The dependence of EM energy absorption upon human head modeling at 1800 MHz", IEEE Transactions on Microwave Theory and Techniques, Oct. 1997, in press.

[11] W. Gander, Computermathematik, Birkhaeuser, Basel, 1992.

[12] W. H. Press, S. A. Teukolsky,W. T. Vetterling, and B. P. Flannery, Numerical Recepies in C, The Art of Scientific Computing, Second Edition, Cambridge University Press, 1992..Dosimetric Evaluation of Sample device, month 1998 9.