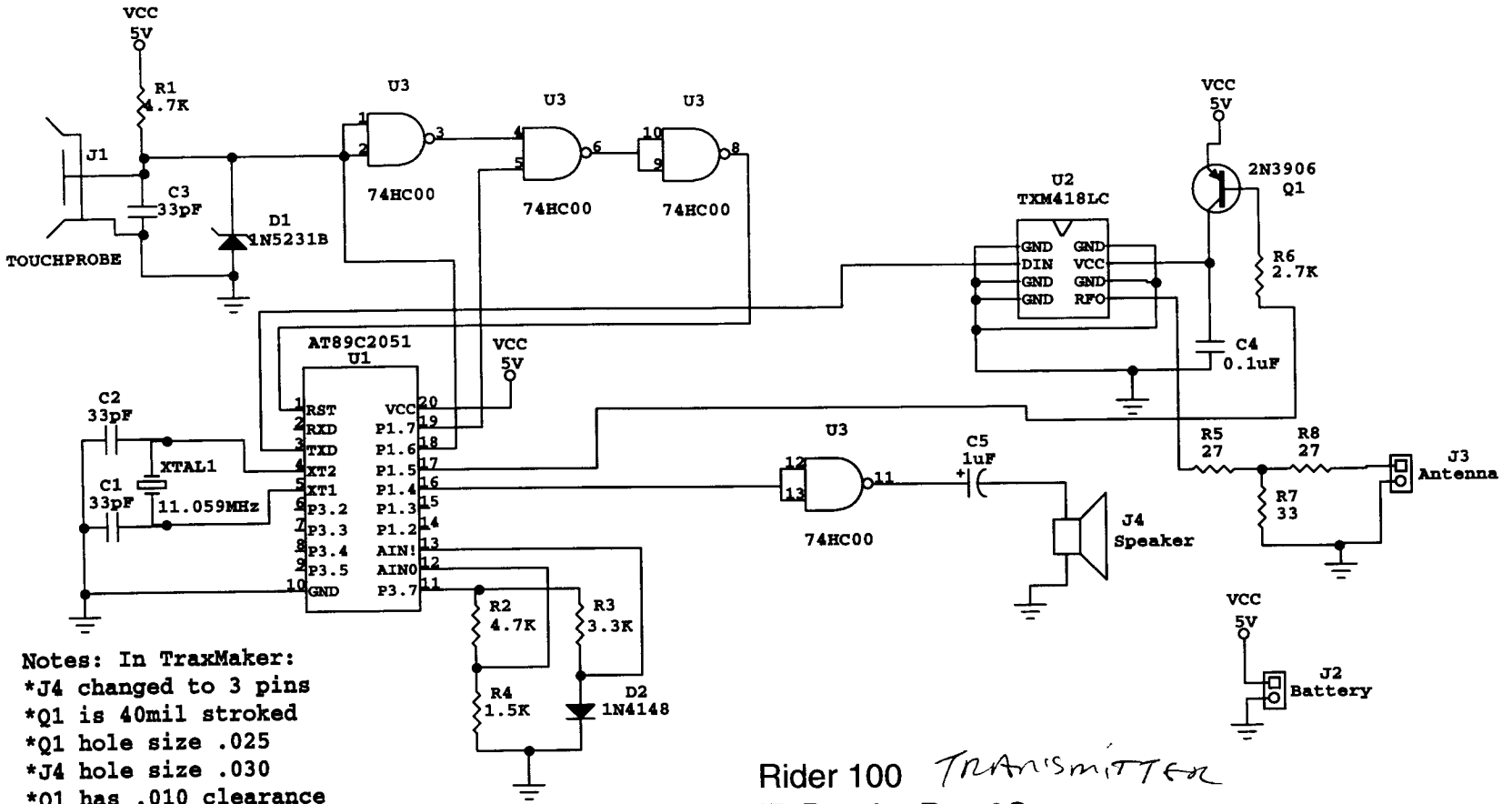

Notes: In TraxMaker:
*J4 changed to 3 pins
*Q1 is 40mil stroked
*Q1 hole size .025
*J4 hole size .030
*Q1 has .010 clearance
*hole sizes to .028 &
.035 for AP circuits

Rider 100 TRANSMITTER
ID Reader Rev 6C
Honor Design, Inc
Feb 3, 1998
updated 2/24/1999