| | |
|---|---|
| **KTL Test Report:** | 8R01147 |
| **Applicant:** | Millennium Enterprises Limited<br>2402 Bank of America Tower, Suite 3625<br>12 Harcourt Road, Central<br>Hong Kong |
| **Equipment Under Test: (E.U.T.)** | RFRM Receiver |
| **FCC ID:** | OHYRFRM |
| **In Accordance With:** | **FCC Part 15, Subpart B**<br>Radio Receivers |
| **Tested By:** | KTL Ottawa Inc.<br>3325 River Road, R.R. 5<br>Ottawa, Ontario K1V 1H2 |
| **Authorized By:** | |
| | T. Tidwell, Laboratory Manager |
| **Date:** | |
| **Total Number of Pages:** | 28 |

## TABLE OF CONTENTS

**Section 1. Summary of Test Results**
General
Summary of Tests

**Section 2. Equipment Under Test (E.U.T.)**
Equipment Details
Description of E.U.T.
Modifications Incorporated in E.U.T.
Theory of Operation
Justification
Exercise Program

**Section 3. Equipment Configuration**
Equipment Configuration List
Inter-connection Cables
Configuration of the Equipment Under Test (E.U.T.) Block Diagram

**Section 4. Receiver Antenna Conducted Emissions**
Test Conditions
Test Results
Receiver Antenna Conducted Plots

**Section 5. Radiated Emissions**
Test Conditions
Test Results
Test Data-Radiated Emissions
Radiated Photographs
Radiated Emissions Plots

**Section 6. Powerline Conducted Emissions**
Test Conditions
Test Results
Powerline Conducted Photographs
Powerline Conducted Plots

**TABLE OF CONTENTS, continued**

**Section 7. Sample Calculations**
Conducted Emissions
Radiated Emissions

**Section 8. Block Diagrams**
Conducted Emissions
Radiated Emissions

**Section 9. Test Equipment List**
Equipment List - Powerline Conducted Emissions
Equipment List - Radiated Emissions

## Section 1. Summary of Test Results

### General:

**All measurements are traceable to national standards.**

These tests were conducted on a sample of the equipment for the purpose of demonstrating compliance with FCC Part 15, Subpart B. Measurement procedure ANSI C63.4-1992 was used for all tests. Radiated Emissions were measured on an open area test site.

| | | | |
|---|---|---|---|
| ☒ | New Submission | ☐ | Production Unit |
| ☐ | Class II Permissive Change | ☒ | Pre-Production Unit |
| C R R | Equipment Code | | |

THIS TEST REPORT RELATES ONLY TO THE ITEM(S) TESTED.

THE FOLLOWING DEVIATIONS FROM, ADDITIONS TO, OR EXCLUSIONS FROM THE TEST SPECIFICATIONS HAVE BEEN MADE.
See " Summary of Test Data".

**NVLAP LAB CODE: 100351-0**

TESTED BY: _____ DATE: _____
Kevin Carr, Technologist

KTL Ottawa Inc. authorizes the above named company to reproduce this report provided it is reproduced in its entirety and for use by the company's employees only.

Any use which a third party makes of this report, or any reliance on or decisions to be made based on it, are the responsibility of such third parties. KTL Ottawa Inc. accepts no responsibility for damages, if any, suffered by any third party as a result of decisions made or actions based on this report.

This report applies only to the items tested.

## Summary Of Test Data

| Name Of Test | Para. No. | Results |
|---|---|---|
| Antenna Conducted Emissions | 15.111 | Not Applicable |
| Radiated Emissions | 15.109 | Complies |
| Powerline Conducted Emissions | 15.107 | Not Applicable |

**Footnotes For N/A's:**

**Test Conditions:**

**Indoor** Temperature: 21 °C
Humidity: 20 %

**Outdoor** Temperature: 0 °C
Humidity: 20 %

## Section 2. Equipment Under Test (E.U.T.)

Manufacturer: Headwaters Research

Model No.: RFRM

Serial No.: None

### Equipment Details

| | |
|---|---|
| Frequency Range: | 315 MHz (Fixed) |
| Number of Channels: | 1 |
| Operating Frequency(ies) of Sample: | 315 MHz |
| Crystal Frequency(ies): | 32.768 kHz, 608 kHz |
| Primary Power Requirement: | 4 x AA Batteries |
| Bandwidth and Emission Designator: | Not Applicable |
| Intermediate Frequency(ies): | Not Applicable |

## Description of E.U.T.

The E.U.T. is a super-generative type receiver for use with Tx model RFTM.

## Modifications Incorporated in E.U.T.

The EUT has not been modified from what is described by the brand name and unique type identification stated above.

## Theory of Operation

The E.U.T. is comprised of three main modules:

1. Radio Receiver PCB
2. Logic / Control PCB
3. Keypad PCB

The receiver antenna is a 2 inch loaded vertical whip with a protective coating.

## Justification

The E.U.T. was configured for testing as per typical installation. Position and bundling of cables were investigated to establish maximum amplitude of emissions.

The following combinations were investigated to establish worst case configuration:

(1) Positioned as per installation instructions.

## Exercise Program

The E.U.T. exercise program used during radiated and conducted testing was designed to exercise the various system components in a manner similar to typical use.

**Exercise Mode:**

(1) Font end of receiver cohered using a CW signal generator feeding a dipole antenna.

# Section 3. Equipment Configuration

## Equipment Configuration List:

| Item | Description | Model No. | Serial. | Rev. |
|---|---|---|---|---|
| (A) | Receiver | RFRM | None | |

## Inter-connection Cables:

Not Applicable

**Configuration of the Equipment Under Test (E.U.T)**

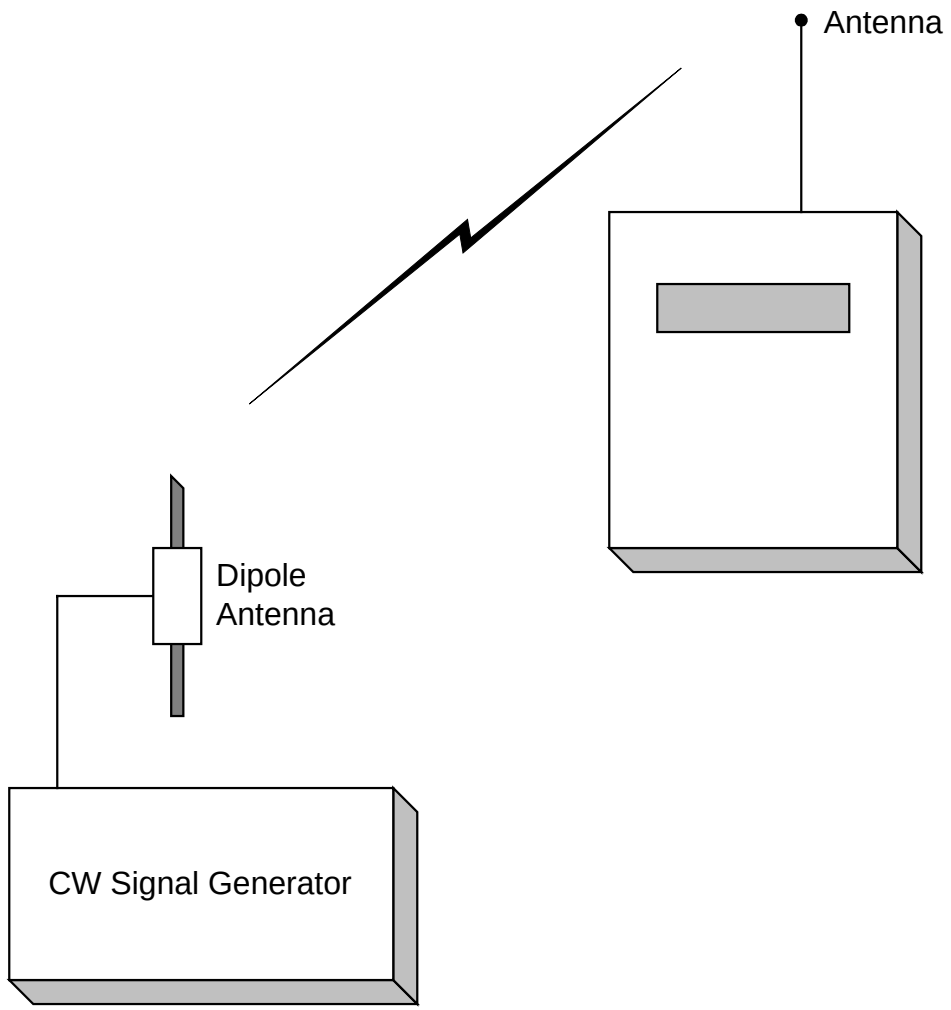

## Section 4. Receiver Antenna Conducted Emissions

| | |
|---|---|
| NAME OF TEST: Receiver Antenna Conducted Emissions | PARA. NO.: 15.111 |
| TESTED BY: | DATE: |

**Test Results:** Complies/Does Not Comply. See attached graphs and table.

**Measurement Data:** See attached graphs and table.

NOT APPLICABLE

## Section 5(A). Radiated Emissions

| | |
|---|---|
| NAME OF TEST: Radiated Emissions | PARA. NO.: 15.109(a) |
| TESTED BY: Kevin Carr | DATE: January 3, 1999 |

**Minimum Standard:**

| Frequency(MHz) | Field Strength (dBμV/m @ 3m) |
|---|---|
| 30 - 88 | 40.0 |
| 88 - 216 | 43.5 |
| 216 - 960 | 46.0 |
| Above 960 | 54.0 |

**Test Results:** Complies. The worst-case emission level is 35.0 dBμV/m @ 3m at 315.78 MHz. This is 11.0 dB below the specification limit.

**Measurement Data:** See attached table.

For super-regenerative receivers the receiver is cohered using a signal generator and dipole antenna.

Handheld equipment and equipment not designed to be mounted in any fixed orientation, the E.U.T. is tested in three orthogonal axis to obtain worst case results.

## Test Data - Radiated Emissions

| Test Distance (meters) : 3 | | Range: A Tower | | Receiver: ESVP | | RBW(kHz): 120 | | Detector: Q-Peak | | | |
|---|---|---|---|---|---|---|---|---|---|---|---|
| **Freq. (MHz)** | **Ant. *** | **Pol. (V/H)** | **Ant. HGT. (m)** | **Table (deg.)** | **RCVD Signal (dBµV/m)** | **Ant. Factor (dB)**** | **Amp. Gain (dB)***** | **Dist. Corr. (dB)** | **Field Strength (dBµV/m)** | **Limit (dBµV/m)** | **Margin (dB)** |
| 315.78 | E/D3 | V | | | 12.0 | 23.0 | | | 35.0 | 46.0 | 11.0 |
| 315.78 | E/D3 | H | | | 3.5 | 23.0 | | | 26.5 | 46.0 | 19.5 |

Notes:
B/C = Biconical, B/L = Biconilog, L/P = Log-Periodic, H = Horn, D/P = Dipole
* Re-measured using dipole antenna. ( ) Denotes failing emission level.
(1) 120 kHz, Q-Peak, (2) 10 kHz, Peak, (3) 100 kHz RGW, 300 kHz VBW, Peak,
(4) 300 kHz RBW, 1 MHz VBW, Peak, (5) 1 MHz RBW, 3 MHz VBW, Peak, (6) 1 MHz RBW, 10 Hz VBW, Peak

## Radiated Photographs (Worst Case Configuration)

**Front View**

**Rear View**

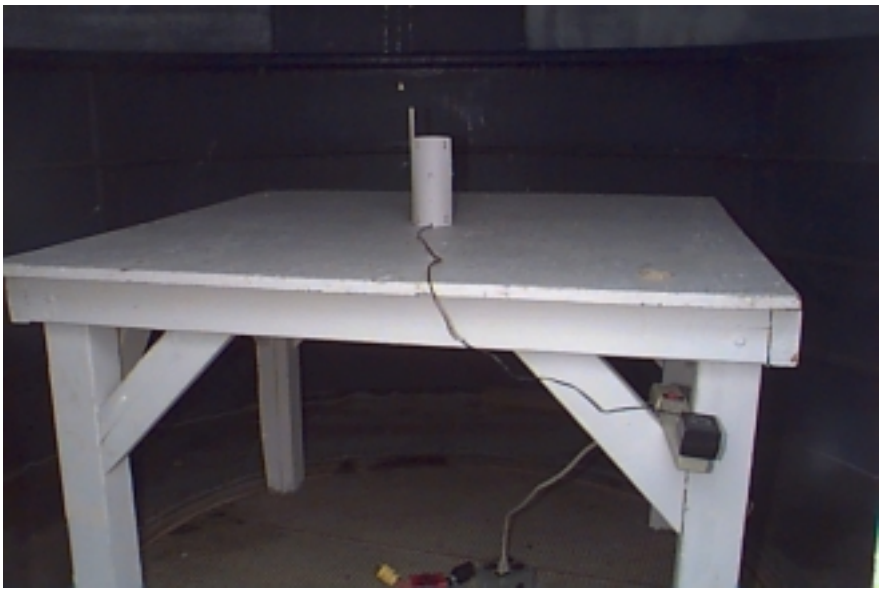

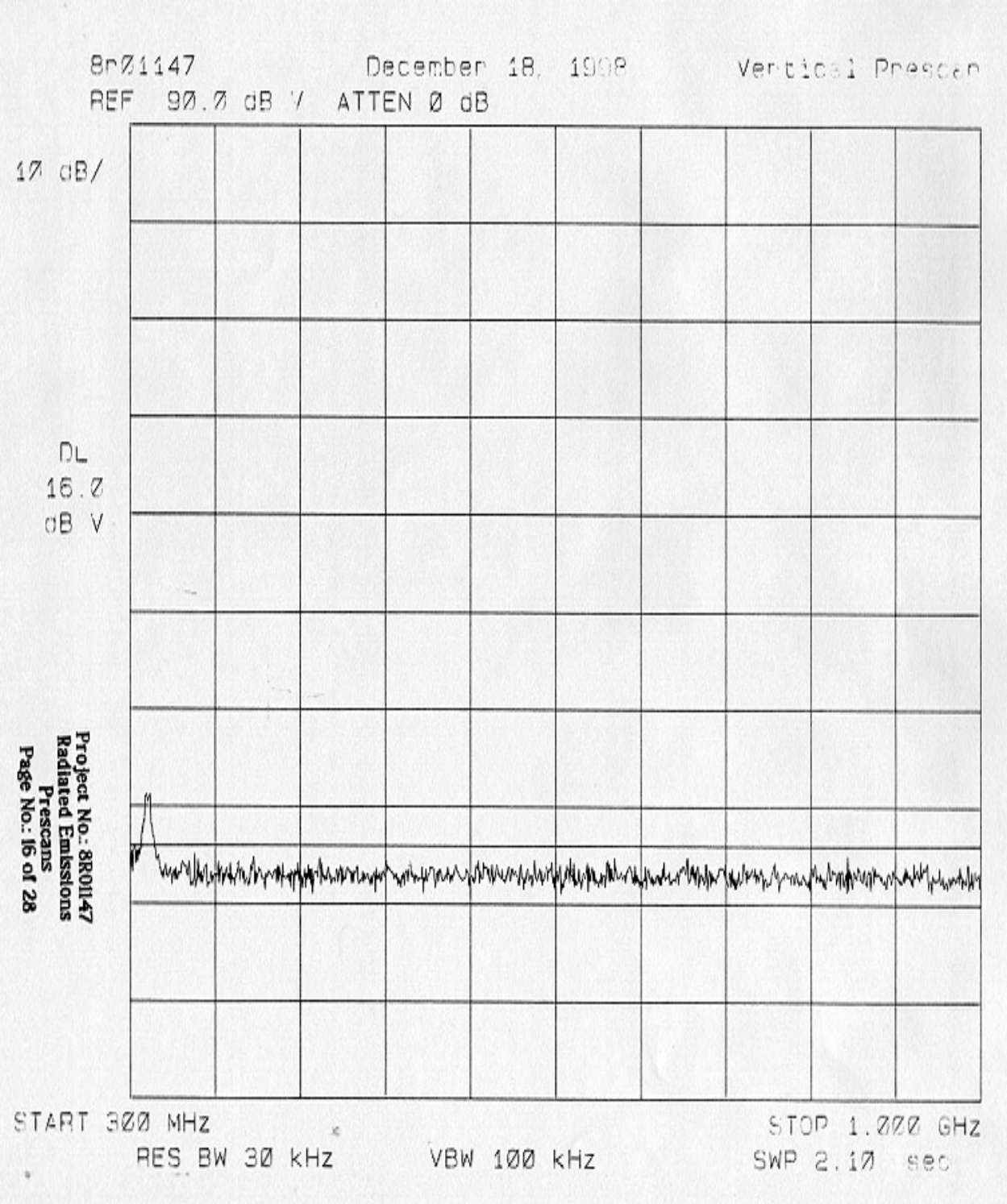
8r01147
December 18, 1998
Vertical Prescan
REF 90.0 dB V ATTEN 0 dB
10 dB/
DL
16.0
dB V
START 300 MHz
STOP 1.000 GHz
RES BW 30 kHz
VBW 100 kHz
SWP 2.10 sec
Project No.: 8R01147
Radiated Emissions
Prescans
Page No.: 16 of 28

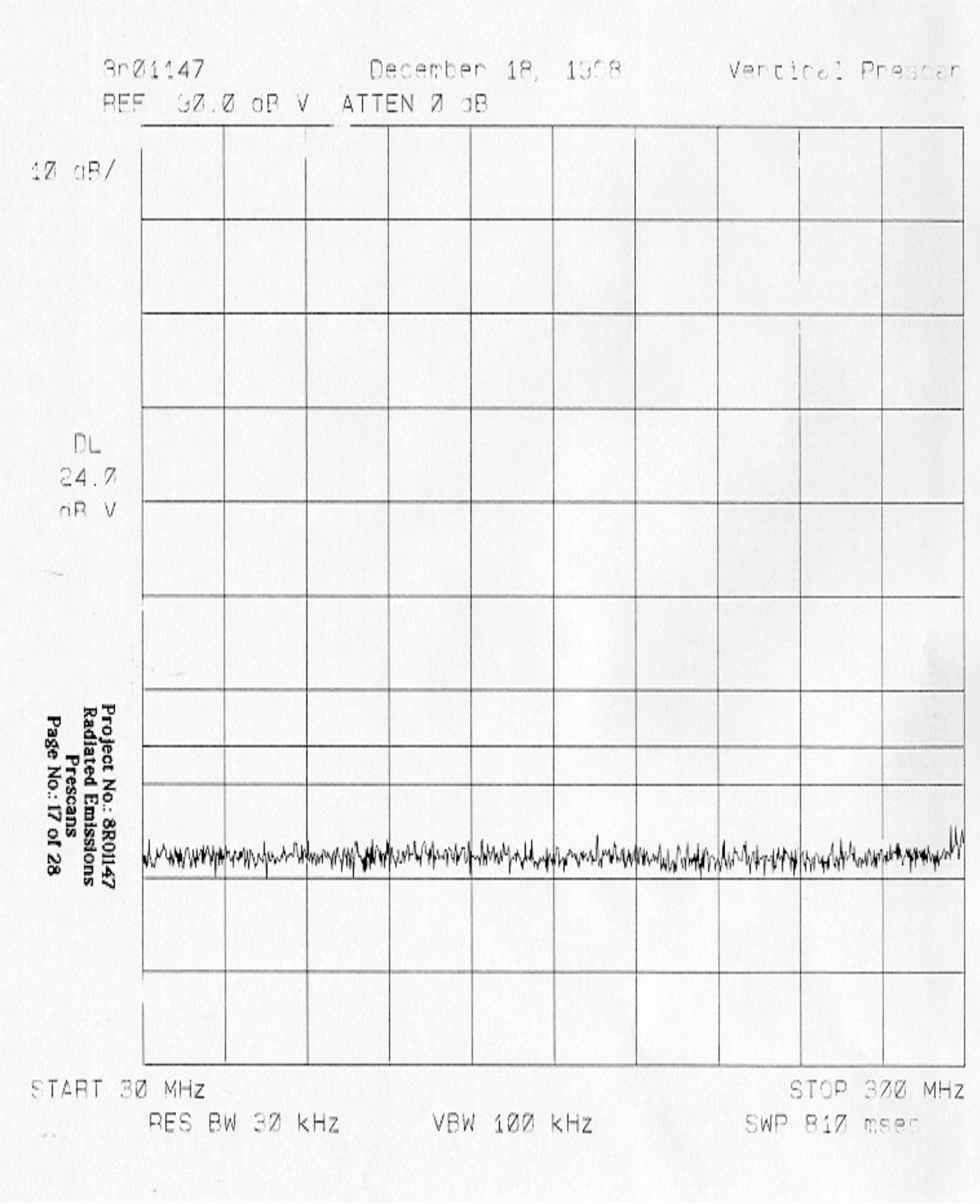
8r01147
December 18, 1998
Vertical Prescan
REF 30.0 dB V ATTEN 0 dB
10 dB/
DL
24.0
dB V
Project No.: 8R01147
Radiated Emissions
Prescans
Page No.: 17 of 28
START 30 MHz
STOP 300 MHz
RES BW 30 kHz
VBW 100 kHz
SWP 810 msec

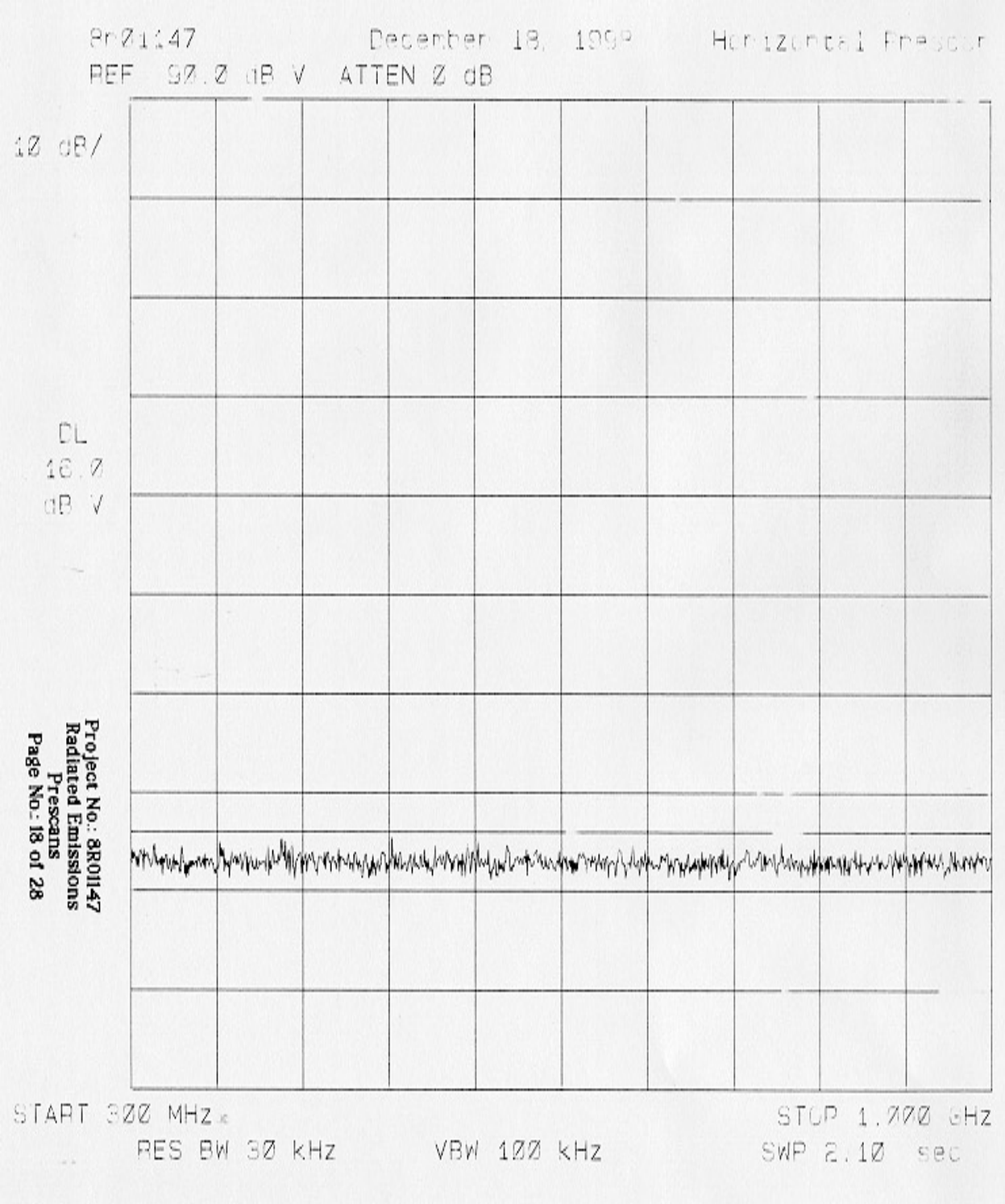
8R01147
December 18, 1998
Horizontal Prescan
REF 90.0 dB V
ATTEN 0 dB
10 dB/
DL
16.0
dB V
Project No.: 8R01147
Radiated Emissions
Prescans
Page No.: 18 of 28
START 300 MHz
STOP 1.000 GHz
RES BW 30 kHz
VBW 100 kHz
SWP 2.10 sec

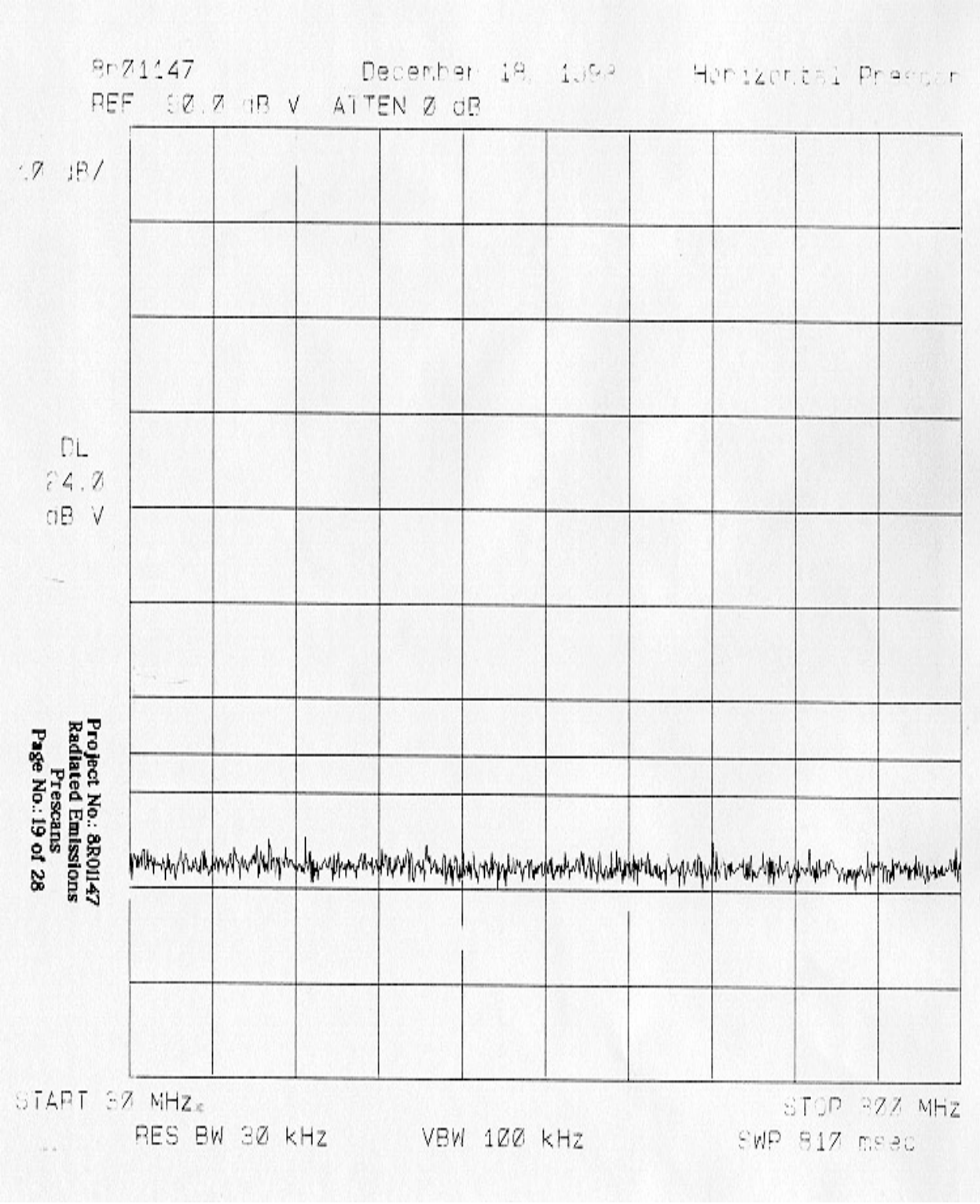
8R01147
REF 50.0 dB V ATTEN 0 dB
10 dB/
DL
24.0
dB V
START 30 MHz
RES BW 30 kHz
VBW 100 kHz
STOP 800 MHz
SWP 817 msec
Project No.: 8R01147
Radiated Emissions
Prescans
Page No.: 19 of 28

## Section 5(B). Radiated Emissions

| | |
|---|---|
| NAME OF TEST: Radiated Emissions | PARA. NO.: 15.109(b) |
| TESTED BY: | DATE: |

NOT APPLICABLE

**Minimum Standard:** Equipment manufactured or imported before June 23, 1999 is permitted the following limits:

| **Frequency (MHz)** | **Field Strength (dBμV/m @ 3m)** |
|---|---|
| 30-70 | 320 (50.1 dBμV/m) |
| 70-130 | 500 (54.0 dBμV/m) |
| 130-174 | 500 - 1500 dBμV/m) |
| 174-260 | 1500 (63.5 dBμV/m) |
| 260-470 | 1500 - 5000 (linear interpolation) |
| Above 470 | 5000 (74.0 dBμV/m) |

**Test Results:** Complies / Does Not Comply. The worst-case emission level is _____ dBμV/m @ 3m at _____ MHz. This is _____ dB above/below the specification limit.

**Measurement Data:** See attached table.

## Test Data - Radiated Emissions

| Test Distance (meters) : | | Range: | | Receiver: | | RBW(kHz): | | Detector: | | | |
|---|---|---|---|---|---|---|---|---|---|---|---|
| Freq. (MHz) | Ant. * | Pol. (V/H) | Ant. HGT. (m) | Table (deg.) | RCVD Signal (dBµV/m) | Ant. Factor (dB)** | Amp. Gain (dB)*** | Dist. Corr. (dB) | Field Strength (dBµV/m) | Limit (dBµV/m) | Margin (dB) |
| | | | | | | | | | | | |
| | | | | | | | | | | | |
| | | | | | | | | | | | |
| | | | | | | | | | | | |
| | | | | | | | | | | | |
| | | | | | | | | | | | |
| | | | | | | | | | | | |
| | | | | | | | | | | | |
| | | | | | | | | | | | |
| | | | | | | | | | | | |
| | | | | | | | | | | | |
| | | | | | | | | | | | |
| | | | | | | | | | | | |
| | | | | | | | | | | | |
| | | | | | | | | | | | |
| | | | | | | | | | | | |
| | | | | | | | | | | | |
| | | | | | | | | | | | |
| | | | | | | | | | | | |
| | | | | | | | | | | | |
| | | | | | | | | | | | |
| | | | | | | | | | | | |
| | | | | | | | | | | | |
| | | | | | | | | | | | |
| | | | | | | | | | | | |
| | | | | | | | | | | | |
| | | | | | | | | | | | |

NOT APPLICABLE

Notes:
B/C = Biconical, B/L = Biconilog, L/P = Log-Periodic, H = Horn, D/P = Dipole
* Re-measured using dipole antenna. ( ) Denotes failing emission level.
(1) 120 kHz, Q-Peak, (2) 10 kHz, Peak, (3) 100 kHz RBW, 300 kHz VBW, Peak,
(4) 300 kHz RBW, 1 MHz VBW, Peak, (5) 1 MHz RBW, 3 MHz VBW, Peak, (6) 1 MHz RBW, 10 Hz VBW, Peak

**Radiated Photographs (Worst Case Configuration)**

FRONT VIEW

NOT APPLICABLE

REAR VIEW

## Section 6. Powerline Conducted Emissions

| | |
|---|---|
| NAME OF TEST: Powerline Conducted Emissions | PARA. NO.: 15.107 |
| TESTED BY: | DATE: |

**Minimum Standard:** The RF energy feed back to the power lines shall not exceed 48 dBµV on any frequency between 0.45 MHz and 30 MHz inclusive.

**Test Results:** Complies / Does Not Comply. See attached graphs.

**Measurement Data:** See attached graphs.

NOT APPLICABLE

**Powerline Conducted Photographs (Worst Case Configuration)**

FRONT VIEW

NOT APPLICABLE

REAR VIEW

# Section 7. Sample Calculations

## Conducted Emissions:

If the Quasi-Peak to Average ratio is greater than 6 dB, then the emission is classified as broadband and its Quasi-Peak level is reduced by 13 dB for comparison to the limit.

i.e. Quasi-Peak level = 40 dBµV
Average level = 34 dBµV
Corrected level = 40 - 13 = 27 dBµV

## Radiated Emissions

Emissions are measured at a distance of 3 meters and corrected for antenna factor and cable loss.

i.e. Received Signal = 25 dBµV @ 100 MHz
Antenna Factor & Cable Loss = 9.8 dB
Field Intensity = 25 + 9.8 = 34.8 dBµV/m @ 3 m

## Section 8. Block Diagrams

### Conducted Emissions

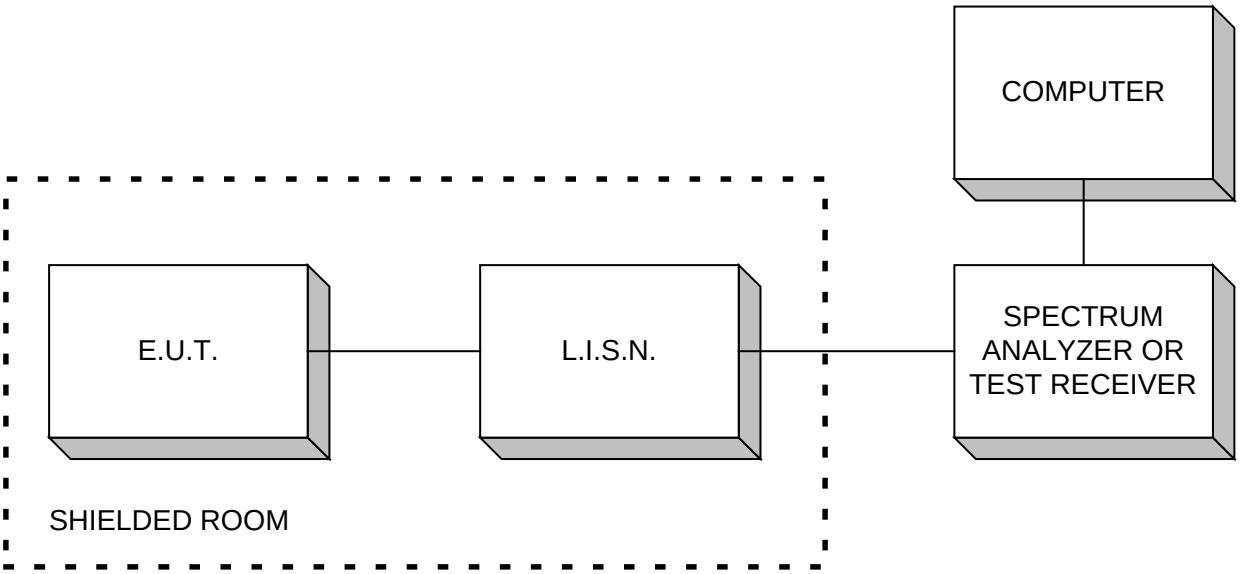


### Radiated Prescan

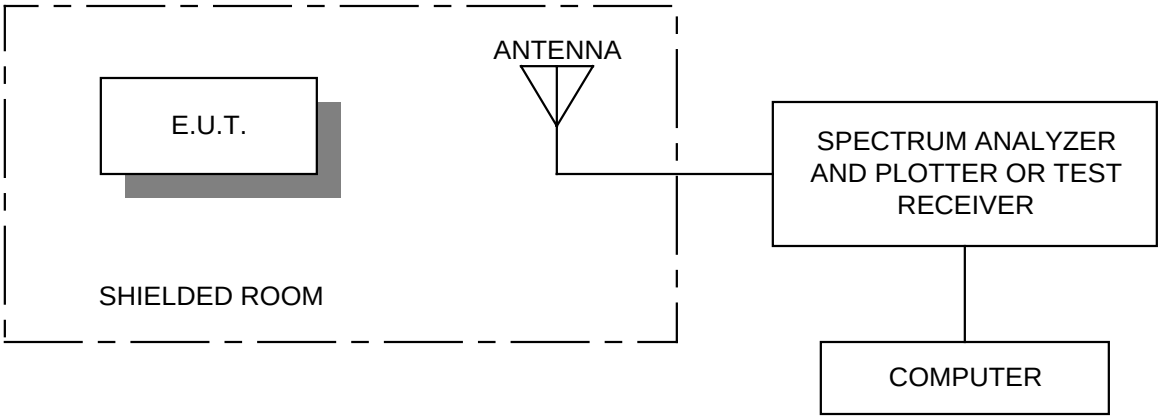

## Outdoor Test Site For Radiated Emissions

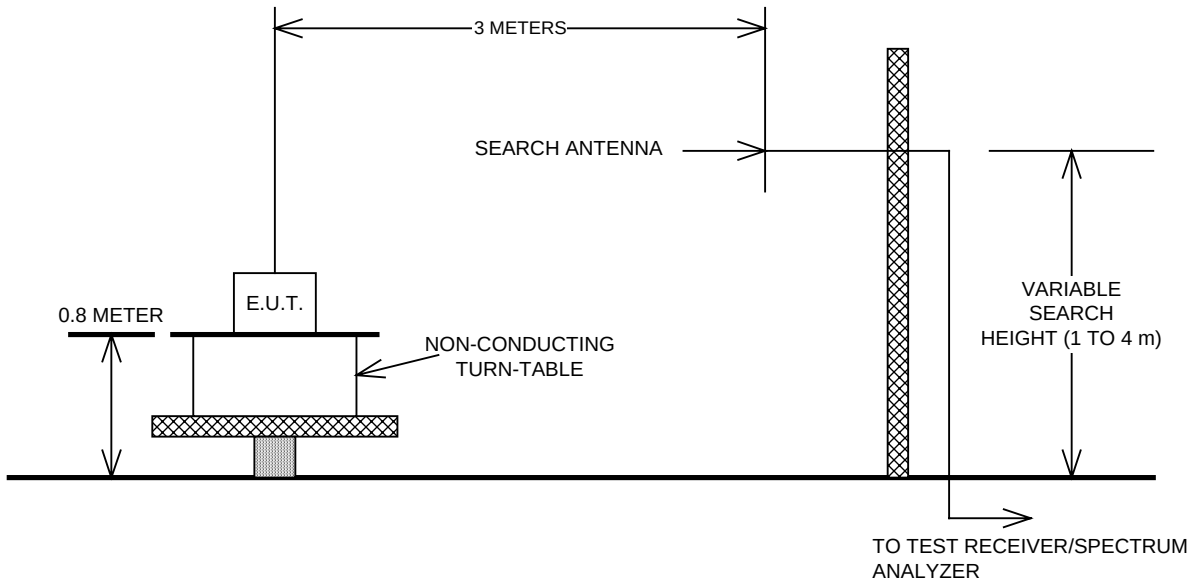


The spectrum was searched up to the 10th harmonic of the fundamental frequency of operation.

## Section 9. Test Equipment List

| CAL CYCLE | EQUIPMENT | MANUFACTURER | MODEL | SERIAL | LAST CAL. | NEXT CAL. | |
|---|---|---|---|---|---|---|---|
| 1 Year | Spectrum Analyzer | Hewlett Packard | 8565E | FA000981 | May 20/98 | May 20/99 | |
| 1 Year | Spectrum Analyzer-**2** | Hewlett Packard | 8566B | 1950A00400 | July 22/98 | July 22/99 | |
| 1 Year | Spectrum Analyzer Display-**2** | Hewlett Packard | 85662A | 1950A01177 | July 22/98 | July 22/99 | |
| 1 Year | Receiver | Rohde & Schwarz | ESVP | 892661/014 | Mar. 31/98 | Mar. 31/99 | |
| 1 Year | Receiver | Rohde & Schwarz | ESVS-30 | 843710/002 | Oct. 27/98 | Oct. 27/99 | |
| | Biconilog Antenna | EMCO | 3143 | 1038 | NCR | NCR | |
| 2 Year | Horn Antenna | EMCO #2 | 3115 | 4336 | Oct. 30/97 | Oct. 30/99 | |
| 1 Year | Log Periodic Antenna | EMCO | LPA-25 | 1141 | July 27/98 | July 27/99 | |
| 1 Year | Dipole Antenna Set | EMCO | 3121C | 1029 | Nov. 18/98 | Nov. 18/99 | |
| 1 Year | Biconical (1) Antenna | EMCO | 3109 | 9204-2708 | July 27/98 | July 27/99 | |
| 1 Year | Digital Storage Oscilloscope | Tektronix | TDS544A | B012005 | July 23/98 | July 23/99 | |
| 1 Year | Low Noise Amplifier | Avantek | AWT-8035 | 1005 | Aug. 4/98 | Aug. 4/99 | |
| 1 Year | Low Noise Amplifier | DBS Microwave | DWT-13035 | 9623 | Aug. 4/98 | Aug. 4/99 | |

NA: Not Applicable
NCR: No Cal Required