FCC Test Report

FCC ID: OI2K711C

Original Grant for Computing Device Peripheral

Report No.	:	TB-FCC139750
Applicant	:	ILIFE TECHNOLOGY(HK) LIMITED
Equipment Under Test (EUT)		
EUT Name	:	MID
Model No.	:	K711C
Serial No.	:	N/A
Brand Name	:	N/A
Receipt Date	:	2014-03-20
Test Date	:	2014-03-21 to 2014-04-09
Issue Date	:	2014-04-10
Standards	:	FCC Part 15: 2012, Subpart B, Class B
Test Method	:	ANSI C63.4-2003
Conclusions	:	**PASS**

In the configuration tested, the EUT complied with the standards specified above,

The EUT technically complies with the FCC requirements

Test/Witness Engineer : WAN SU

Approved& Authorized :

This report details the results of the testing carried out on one sample. The results contained in this test report do not relate to other samples of the same product. The manufacturer should ensure that all products in series production are in conformity with the product sample detailed in the report.

1A/F., Bldg.6, Yusheng Industrial Zone, The National Road No.107 Xixiang Section 467, Xixiang, Bao'an, Shenzhen, China
Tel: +86 75526509301 Fax: +86 75526509195

Comments

1. GENERAL INFORMATION ABOUT EUT 3
1.1 Client Information 3
1.2 General Description of EUT (Equipment Under Test) 3
1.3 Block Diagram Showing the Configuration of System Tested 4
1.4 Description of Support Units 4
1.5 Description of Test Mode 5
1.6 Test Facility 5
2. TEST SUMMARY 7
3. CONDUCTED EMISSION TEST 8
3.1 Test Standard and Limit 8
3.1.1Test Standard 8
3.1.2 Test Limit 8
3.2 Test Setup 8
3.3 Test Procedure 8
3.4 Test Equipment Used 9
3.5 EUT Operating Mode 9
3.6 Deviation 9
3.7 Test Data 9
4. RADIATED EMISSION TEST 14
4.1 Test Standard and Limit 14
4.1.1 Test Standard 14
4.1.2 Test Limit 14
4.2 Test Setup 14
4.3 Test Procedure 15
4.4 Test Equipment 15
4.5 EUT Operating Condition 16
4.6 Deviation 16
4.7 Test Data 16

1. General Information about EUT

1.1 Client Information

Applicant	:	ILIFE TECHNOLOGY(HK) LIMITED
Address	:	3rd Floor, Bld. 3, Lijincheng Industrial Park, The East of Gongye Road, Longhua, Shenzhen, China
Applicant	:	ILIFE TECHNOLOGY(HK) LIMITED
Address	:	3rd Floor, Bld. 3, Lijincheng Industrial Park, The East of Gongye Road, Longhua, Shenzhen, China

1.2 General Description of EUT (Equipment Under Test)

EUT Name	:	MID
Model No.	:	K711C
Model difference	:	N/A
Power Supply	:	USB Charging from PC DC power supplied by AC/DC Adapter DC Voltage supplied from Li-Polymer battery.
Power Rating	:	USB DC 5V form PC. AC/DC Adapter(BLT-XC0520B): Input: AC 100~240V 50/60Hz Output: DC 5V 1.5A DC 3.7V 2250mAh from Li-ion battery
Connecting I/O Port(s)	:	The equipent have USB port for link with PC, so the equipment is considered as a Computing Device Peripheral.
Note: The equipment have WiFi (802.11b/g/n) mode, WiFi part have test comply with FCC Part 15C Rules. More detailed features description, please refer to the manufacturer's specifications or the User's Manual.		

1.3 Block Diagram Showing the Configuration of System Tested

USB Charging with loading to PC

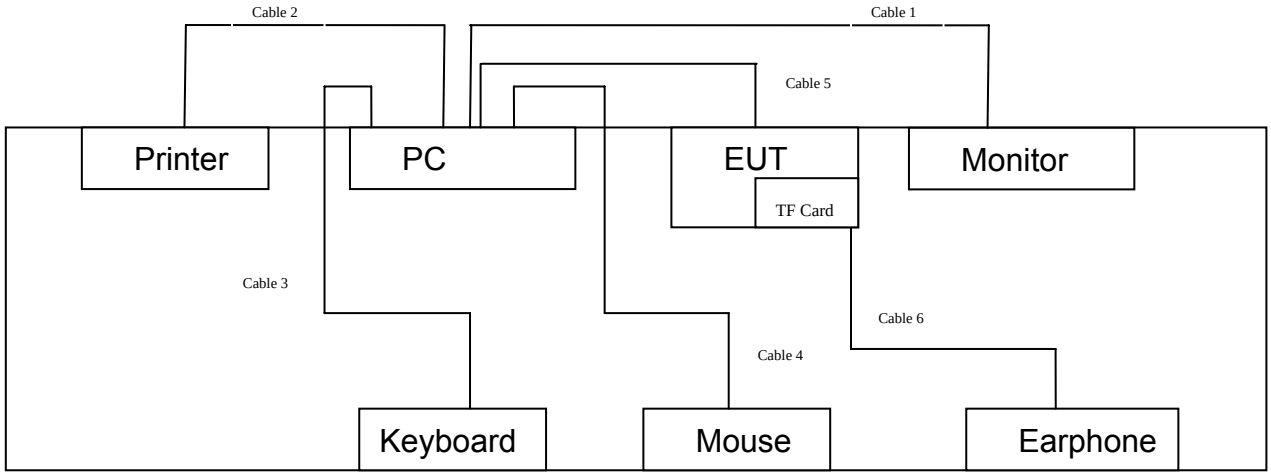

AC Charging with USB Reading

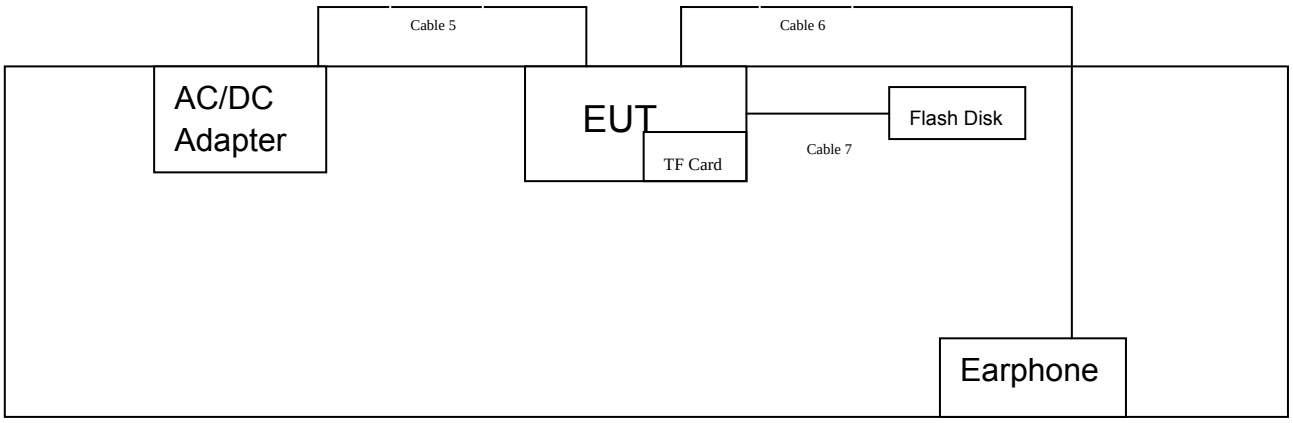

1.4 Description of Support Units

Equipment Information				
Name	**Model**	**S/N**	**Manufacturer**	**Used "√"**
Printer	HP1505n	VNF3G06957	HP	√
LCD Monitor	E170Sc	----	DELL	√
PC	OPTIPLEX380	----	DELL	√
Keyboard	L100	U01C	DELL	√
Mouse	M-UARDEL7	----	DELL	√
TF Card	1GB	----	Kingston	√
Flash Disk	2GB	----	SSK	√

Notebook	B470A2450	VNF3G06957	Lenovo	
Earphone	----	----	----	Accessories
Cable Information				
Number	**Shielded Type**	**Ferrite Core**	**Length**	**Note**
Cable 1	YES	YES(2)	1.8M	
Cable 2	YES	YES(1)	2.0M	
Cable 3	YES	NO	1.5M	
Cable 4	YES	NO	1.5M	
Cable 5	NO	NO	0.8M	Accessories
Cable 6	NO	NO	1.15M	Accessories
Cable 7	NO	NO	0.3M	Accessories

1.5 Description of Test Mode

Mode	Description
Mode 1	USB Charging with loading to PC
Mode 2	AC Charging with USB Reading
Mode 3	AC Charging with Camera working
Mode 4	AC Charging with WiFi Link

To investigate the maximum EMI emission characteristics generates from EUT, the test system was pre-scanning tested base on the consideration of the EUT operation mode, and the maximum emission levels of the conducted and radiated emissions are compared to the FCC Part 15 Subpart B (Class B) limits.
Note: The test results for EUT's RF functions are contained in another Certification Report.

1.6 Test Facility

The tests were performed at:
Shenzhen Certification Technology Service Co., Ltd
2F, Building B, East Area of Nanchang Second Industrial Zone, Gushu 2nd Road, Bao'an District, Shenzhen, 518126, China
Tel: 86-755-86375552 Fax: 86-755-26736857

The test report was fulfilled by Shenzhen Toby Technology Co., Ltd. Shenzhen Toby Technology Co., Ltd. is assumed full responsibility for the accuracy and completeness of these measurements results.

2. Test Summary

FCC Part15, Subpart B				
Section	**Test Method**	**Test Item**	**Limit**	**Judgment**
15.109	ANSI C63.4:2003	Radiated Emission	Class B	PASS
15.107	ANSI C63.4:2003	Conducted Emission (150 kHz to 30MHz)	Class B	PASS
Note: N/A is an abbreviation for Not Applicable.				

3. Conducted Emission Test

3.1 Test Standard and Limit

3.1.1Test Standard

FCC Part 15.107

3.1.2 Test Limit

Conducted Emission Test Limit

Frequency (MHz)	Conducted Limit (dBuV)	
	Quasi-peak Level	Average Level
0.15~0.5	66 ~ 56 *	56 ~ 46 *
0.5~5.0	56.00	46.00
5.0~30.0	60.00	50.00
Notes:(1) *Decreasing linearly with logarithm of the frequency. (2) The lower limit shall apply at the transition frequencies.		

3.2 Test Setup

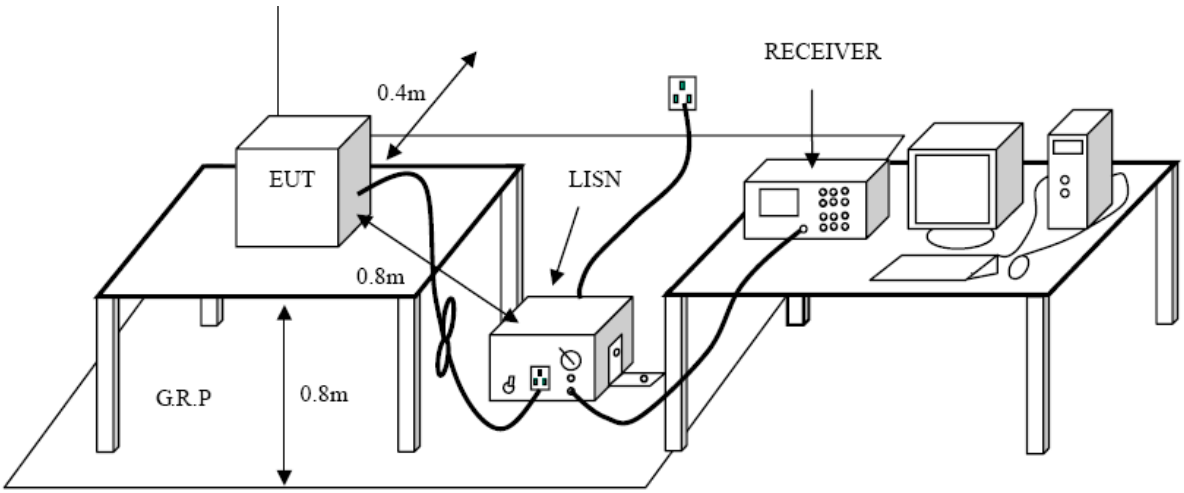

3.3 Test Procedure

The EUT was placed 0.8 meters from the horizontal ground plane with EUT being connected to the power mains through a line impedance stabilization network (LISN). All other support equipments powered from additional LISN(s). The LISN provide 50 Ohm/ 50uH of coupling impedance for the measuring instrument.

Interconnecting cables that hang closer than 40 cm to the ground plane shall be folded back and forth in the center forming a bundle 30 to 40 cm long.

I/O cables that are not connected to a peripheral shall be bundled in the center. The end of the cable may be terminated, if required, using the correct terminating impedance.

The overall length shall not exceed 1 m.

LISN at least 80 cm from nearest part of EUT chassis.

The bandwidth of EMI test receiver is set at 9kHz, and the test frequency band is from 0.15MHz to 30MHz.

For the actual test configuration, please refer to the EUT test Photos.

3.4 Test Equipment Used

Description	Manufacturer	Model No.	Serial No.	Cal. Date	Cal. Due Date
EMI Test Receiver	ROHDE& SCHWARZ	ESCI	100321	2013-08-10	2014-08-09
50ΩCoaxial Switch	Anritsu	MP59B	X10321	2013-08-10	2014-08-09
L.I.S.N	Rohde & Schwarz	ENV216	101131	2013-08-10	2014-08-09
L.I.S.N	SCHWARZBECK	NNBL 8226-2	8226-2/164	2013-08-10	2014-08-09

3.5 EUT Operating Mode

(1) Setup the EUT and peripherals refer to the description of test mode.

3.6 Deviation

The test is no deviation from the standard.

3.7 Test Data

Please see the next page.

E.U.T :	MID	Model Name :	K711C
Temperature :	21°C	Relative Humidity :	51 %
Terminal	Line		
Test Voltage :	AC 120 V / 60Hz		
Test Mode :	AC Charging with USB Reading		

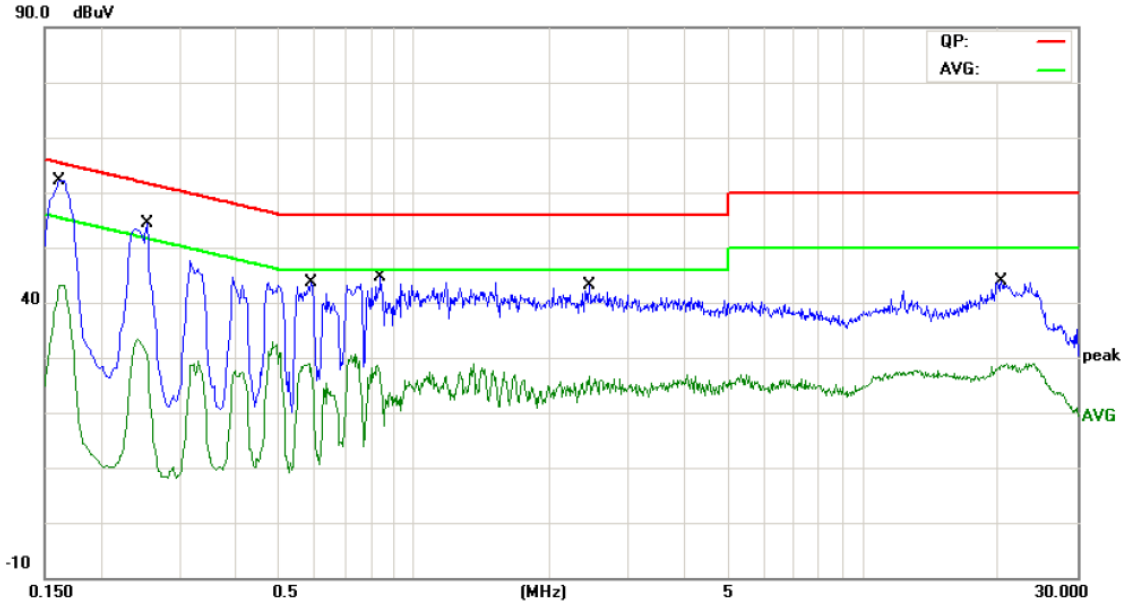

No.	Mk.	Freq.	Reading Level	Correct Factor	Measure-ment	Limit	Over	
		MHz	dBuV	dB	dBuV	dBuV	dB	Detector
1	*	0.1620	46.89	10.76	57.65	65.36	-7.71	QP
2		0.1620	30.88	10.76	41.64	55.36	-13.72	AVG
3		0.2540	37.80	9.93	47.73	61.62	-13.89	QP
4		0.2540	16.94	9.93	26.87	51.62	-24.75	AVG
5		0.5899	30.41	9.41	39.82	56.00	-16.18	QP
6		0.5899	17.03	9.41	26.44	46.00	-19.56	AVG
7		0.8420	30.66	9.41	40.07	56.00	-15.93	QP
8		0.8420	17.25	9.41	26.66	46.00	-19.34	AVG
9		2.4539	29.15	9.35	38.50	56.00	-17.50	QP
10		2.4539	16.28	9.35	25.63	46.00	-20.37	AVG
11		20.2979	27.03	10.26	37.29	60.00	-22.71	QP
12		20.2979	16.97	10.26	27.23	50.00	-22.77	AVG

E.U.T :	MID	Model Name :	K711C
Temperature :	26°C	Relative Humidity :	51 %
Terminal	Neutral		
Test Voltage :	AC 120 V / 60Hz		
Test Mode :	AC Charging with USB Reading		

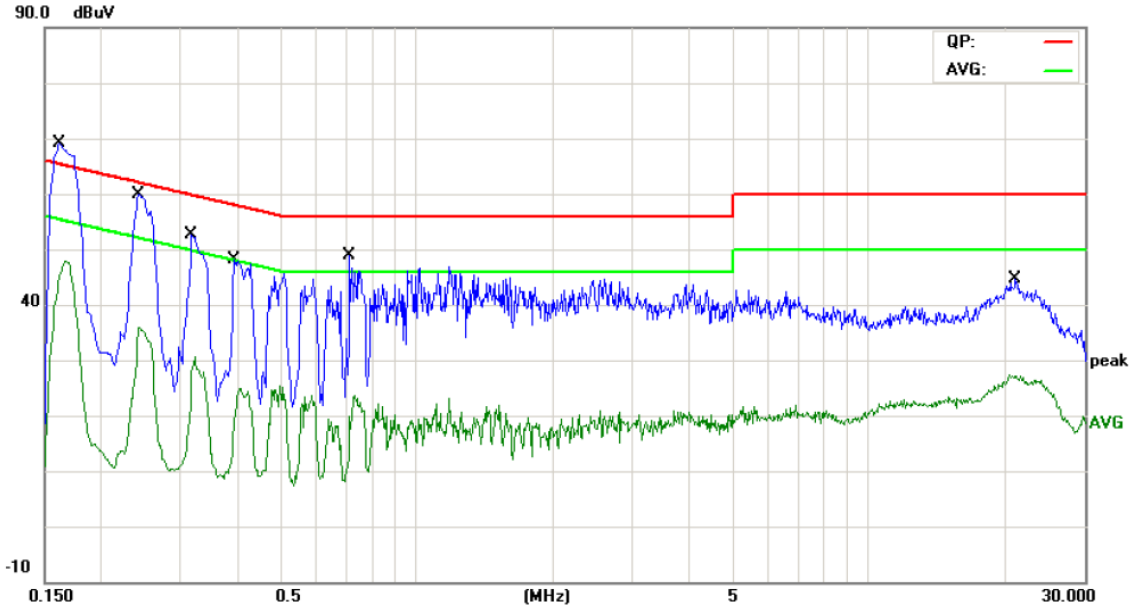

No.	Mk.	Freq.	Reading Level	Correct Factor	Measure-ment	Limit	Over	
		MHz	dBuV	dB	dBuV	dBuV	dB	Detector
1	*	0.1620	51.16	10.79	61.95	65.36	-3.41	QP
2		0.1620	32.71	10.79	43.50	55.36	-11.86	AVG
3		0.2420	41.46	10.04	51.50	62.02	-10.52	QP
4		0.2420	21.98	10.04	32.02	52.02	-20.00	AVG
5		0.3180	33.72	9.76	43.48	59.76	-16.28	QP
6		0.3180	13.99	9.76	23.75	49.76	-26.01	AVG
7		0.3940	29.71	9.66	39.37	57.98	-18.61	QP
8		0.3940	10.55	9.66	20.21	47.98	-27.77	AVG
9		0.7100	29.96	9.46	39.42	56.00	-16.58	QP
10		0.7100	10.67	9.46	20.13	46.00	-25.87	AVG
11		21.0580	27.31	10.34	37.65	60.00	-22.35	QP
12		21.0580	15.19	10.34	25.53	50.00	-24.47	AVG

E.U.T :	MID	Model Name :	K711C
Temperature :	21°C	Relative Humidity :	51 %
Terminal	Line		
Test Voltage :	AC 120 V / 60Hz		
Test Mode :	USB Charging with loading to PC		

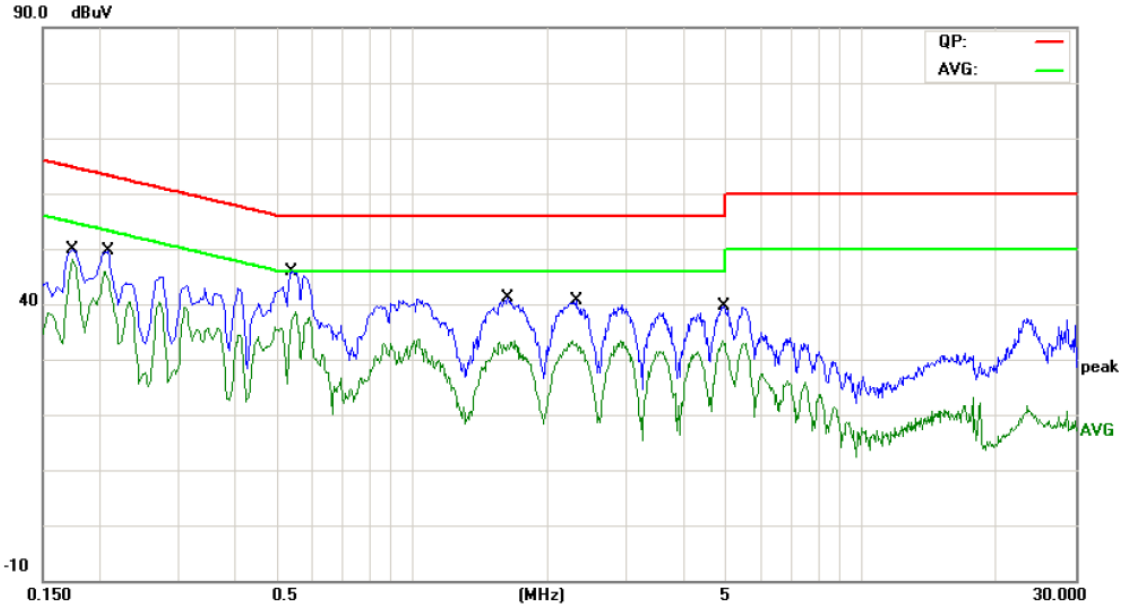

No.	Mk.	Freq.	Reading Level	Correct Factor	Measure-ment	Limit	Over	
		MHz	dBuV	dB	dBuV	dBuV	dB	Detector
1		0.1740	38.48	10.65	49.13	64.76	-15.63	QP
2	*	0.1740	37.65	10.65	48.30	54.76	-6.46	AVG
3		0.2100	36.85	10.28	47.13	63.20	-16.07	QP
4		0.2100	34.02	10.28	44.30	53.20	-8.90	AVG
5		0.5380	35.37	9.47	44.84	56.00	-11.16	QP
6		0.5380	27.07	9.47	36.54	46.00	-9.46	AVG
7		1.6340	29.77	9.35	39.12	56.00	-16.88	QP
8		1.6340	22.70	9.35	32.05	46.00	-13.95	AVG
9		2.3179	28.77	9.38	38.15	56.00	-17.85	QP
10		2.3179	22.79	9.38	32.17	46.00	-13.83	AVG
11		4.9420	25.25	9.47	34.72	56.00	-21.28	QP
12		4.9420	22.41	9.47	31.88	46.00	-14.12	AVG

E.U.T :	MID	Model Name :	K711C
Temperature :	26°C	Relative Humidity :	51 %
Terminal	Neutral		
Test Voltage :	AC 120 V / 60Hz		
Test Mode :	USB Charging with loading to PC		

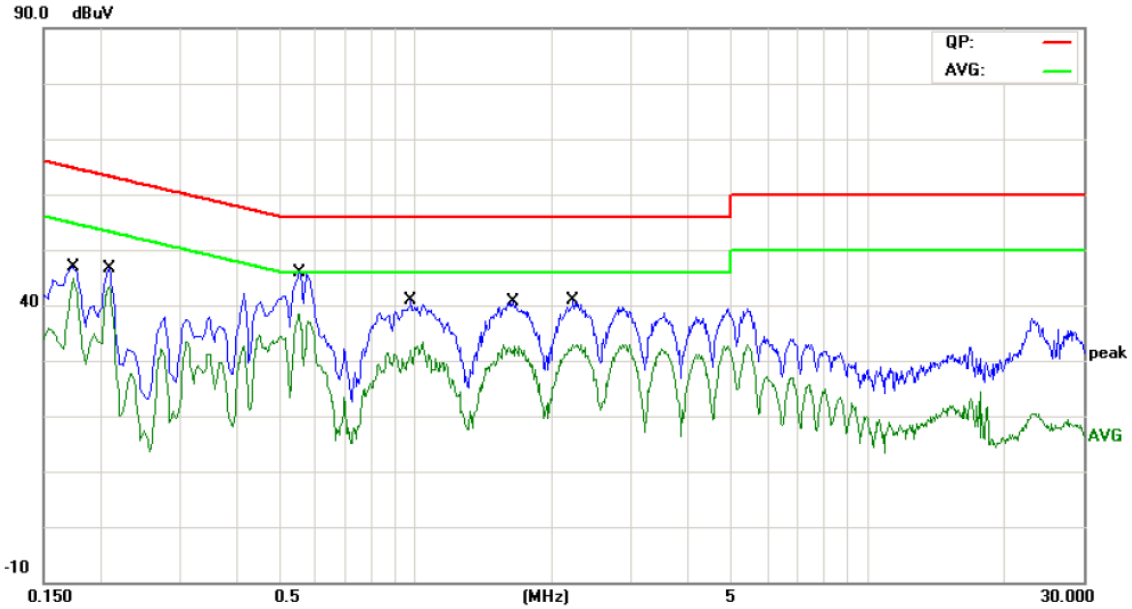

No.	Mk.	Freq.	Reading Level	Correct Factor	Measure-ment	Limit	Over	
		MHz	dBuV	dB	dBuV	dBuV	dB	Detector
1		0.1740	35.02	10.65	45.67	64.76	-19.09	QP
2		0.1740	34.15	10.65	44.80	54.76	-9.96	AVG
3		0.2100	34.60	10.28	44.88	63.20	-18.32	QP
4		0.2100	33.12	10.28	43.40	53.20	-9.80	AVG
5		0.5540	36.34	9.46	45.80	56.00	-10.20	QP
6	*	0.5540	28.78	9.46	38.24	46.00	-7.76	AVG
7		0.9740	29.80	9.35	39.15	56.00	-16.85	QP
8		0.9740	22.16	9.35	31.51	46.00	-14.49	AVG
9		1.6380	29.83	9.35	39.18	56.00	-16.82	QP
10		1.6380	22.17	9.35	31.52	46.00	-14.48	AVG
11		2.2260	29.15	9.37	38.52	56.00	-17.48	QP
12		2.2260	23.44	9.37	32.81	46.00	-13.19	AVG

4. Radiated Emission Test

4.1 Test Standard and Limit

4.1.1 Test Standard
FCC Part 15.109
4.1.2 Test Limit

Radiated Emission Limit

Frequency (MHz)	Field Strength (dBuV/m)	Measurement Distance (meters)
30~88	40	3
88~216	43.5	3
216~960	46	3
Above 960	54	3
Note: Emission Level(dBuV/m)=20log Emission Level(uV/m)		

4.2 Test Setup

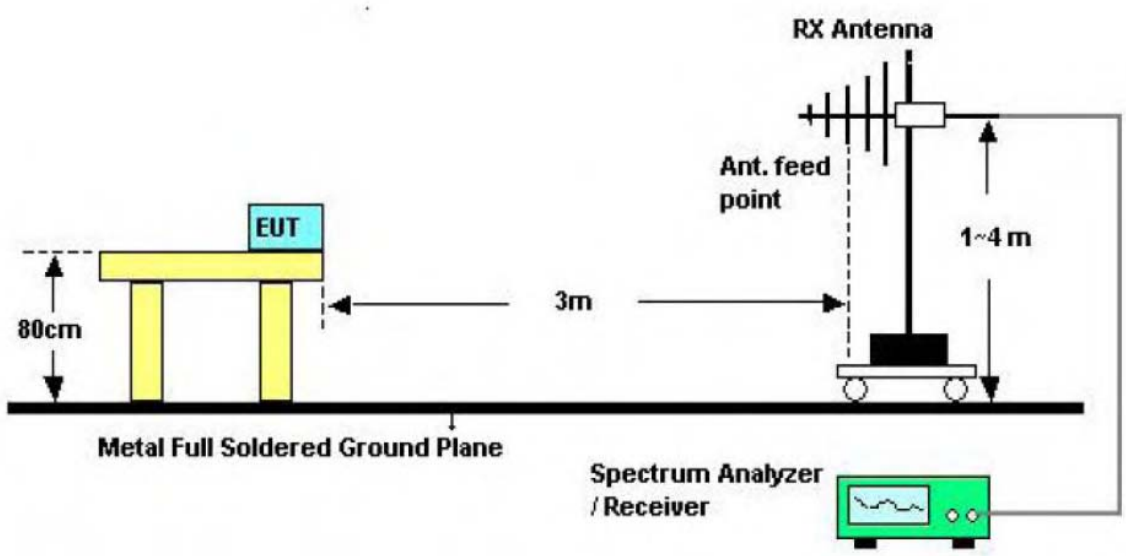

30MHz to 1000MHz Test Setup

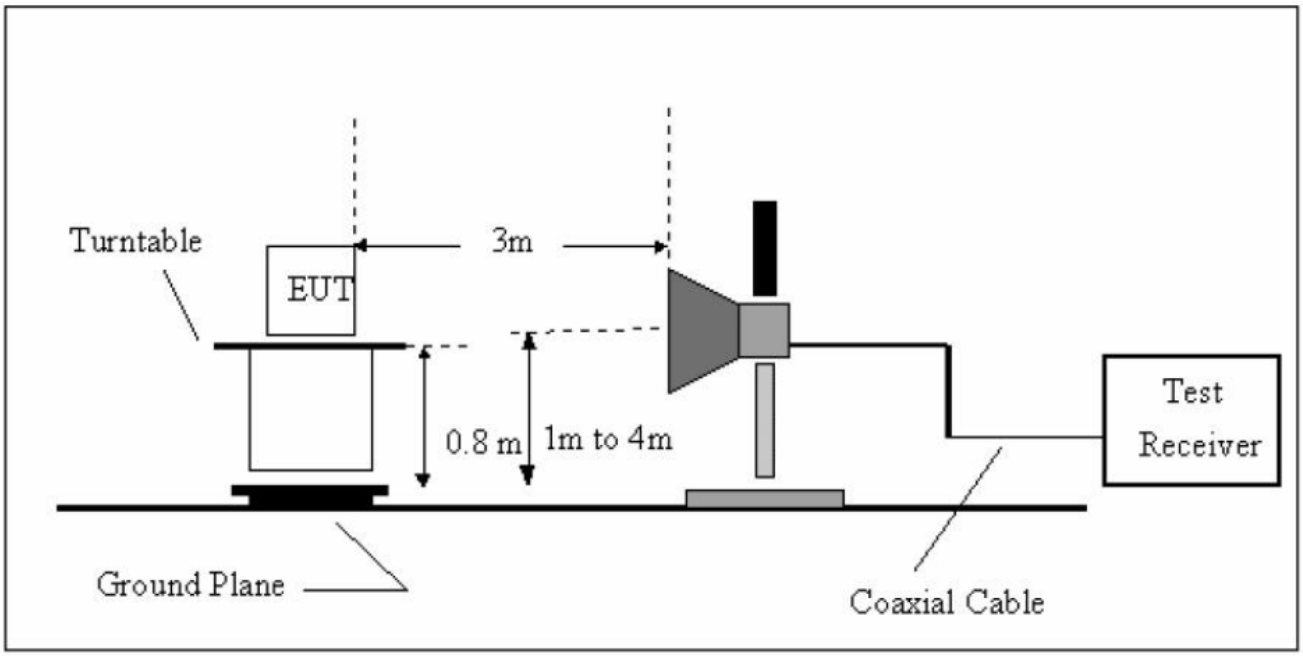

Above 1GHz Test Setup

4.3 Test Procedure

(1) The measuring distance of 3m shall be used for measurements at frequency from 30MHz up to1GHz.
(2) The EUT was placed on the top of a rotating table 0.8 meters above the ground. The table was rotated 360 degrees to determine the position of the highest radiation.
(3) The height of the equipment or of the substitution antenna shall be 0.8m, the height of the test antenna shall vary between 1 m to 4 m. Both horizontal and vertical polarizations of the antenna are set to make the measurement.
(4) The initial step in collecting radiated emission data is a spectrum analyzer peak detector mode pre-scanning the measurement frequency range. Significant peaks are then marked and then Quasi Peak detector mode re-measured.
(5) If the Peak Mode measured value compliance with and lower than Quasi Peak Mode Limit, the EUT shall be deemed to meet QP Limits and then no additional QP Mode measurement performed.
(6) For more details, please refer to the EUT Test Photos.

4.4 Test Equipment

Equipment	Manufacturer	Model No.	Serial No.	Last Cal.	Cal. Due Date
Spectrum Analyzer	Agilent	E4407B	MY45106456	Mar. 20, 2014	Mar. 19, 2014
Spectrum Analyzer	Rohde & Schwarz	FSP30	DE25181	Aug. 10, 2013	Aug.09, 2014

EMI Test Receiver	Rohde & Schwarz	ESCI	101165	Aug. 10, 2013	Aug.09, 2014
Bilog Antenna	ETS-LINDGREN	3142E	00117537	Mar. 07, 2014	Mar.06, 2015
Bilog Antenna	ETS-LINDGREN	3142E	00117542	Mar. 07, 2014	Mar.06, 2015
Horn Antenna	ETS-LINDGREN	3117	00143207	Mar. 07, 2014	Mar.06, 2015
Horn Antenna	ETS-LINDGREN	3117	00143209	Mar. 07, 2014	Mar.06, 2015
Pre-amplifier	HP	11909A	185903	Mar. 07, 2014	Mar.06, 2015
Pre-amplifier	HP	8447B	3008A00849	Mar. 07, 2014	Mar.06, 2015
Cable	HUBER+SUHNER	100	SUCOFLEX	Mar. 07, 2014	Mar.06, 2015
Signal Generator	Rohde & Schwarz	SML03	IKW682-054	Feb. 11, 2014	Feb.10, 2015
Positioning Controller	ETS-LINDGREN	2090	N/A	N/A	N/A

4.5 EUT Operating Condition

(1) Setup the EUT and peripherals refer to the description of test mode.

4.6 Deviation

The test is no deviation from the standard.

4.7 Test Data

Below 1 GHz

EUT:	MID	Model:	K711C
Temperature:	25 ℃	Relative Humidity:	55%
Test Voltage:	AC 120V/60 Hz		
Ant. Pol.	Horizontal		
Test Mode:	Mode 1: USB Charging with loading to PC		
Remark:	N/A		

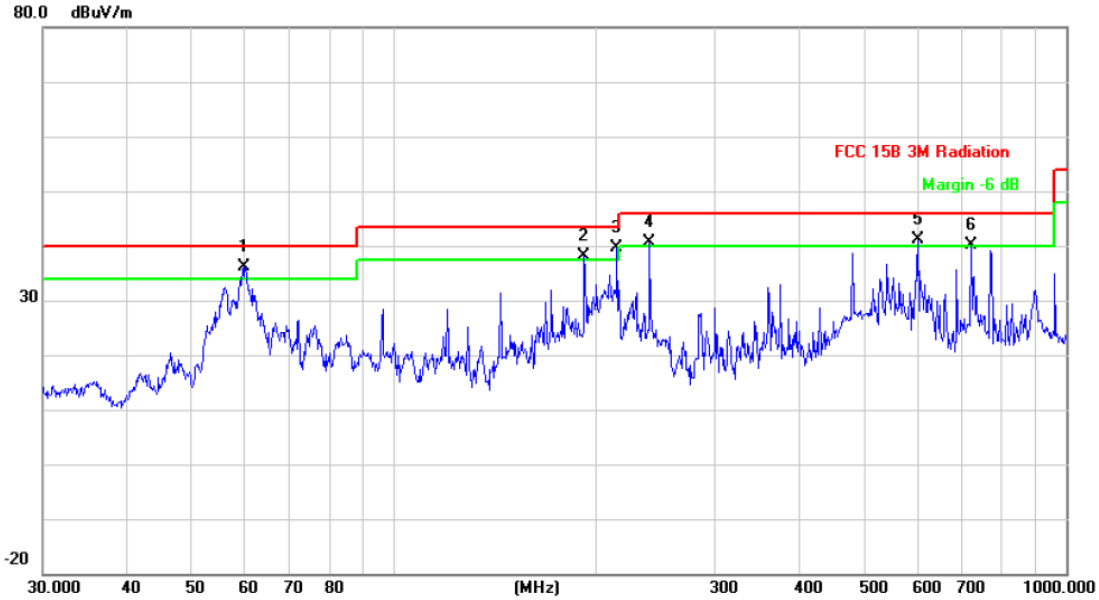

No.	Mk.	Freq.	Reading Level	Correct Factor	Measure-ment	Limit	Over	
		MHz	dBuV	dB/m	dBuV/m	dBuV/m	dB	Detector
1	*	59.8588	60.73	-24.53	36.20	40.00	-3.80	peak
2	!	191.7450	59.04	-20.81	38.23	43.50	-5.27	peak
3	!	214.5141	59.45	-19.76	39.69	43.50	-3.81	peak
4	!	239.9874	59.30	-18.59	40.71	46.00	-5.29	peak
5	!	601.4265	50.53	-9.41	41.12	46.00	-4.88	peak
6	!	721.7259	47.11	-7.10	40.01	46.00	-5.99	peak

Emission Level= Read Level+ Correct Factor

EUT:	MID	Model:	K711C
Temperature:	25 ℃	Relative Humidity:	55%
Test Voltage:	AC 120V/60 Hz		
Ant. Pol.	Vertical		
Test Mode:	Mode 1: USB Charging with loading to PC		
Remark:	N/A		

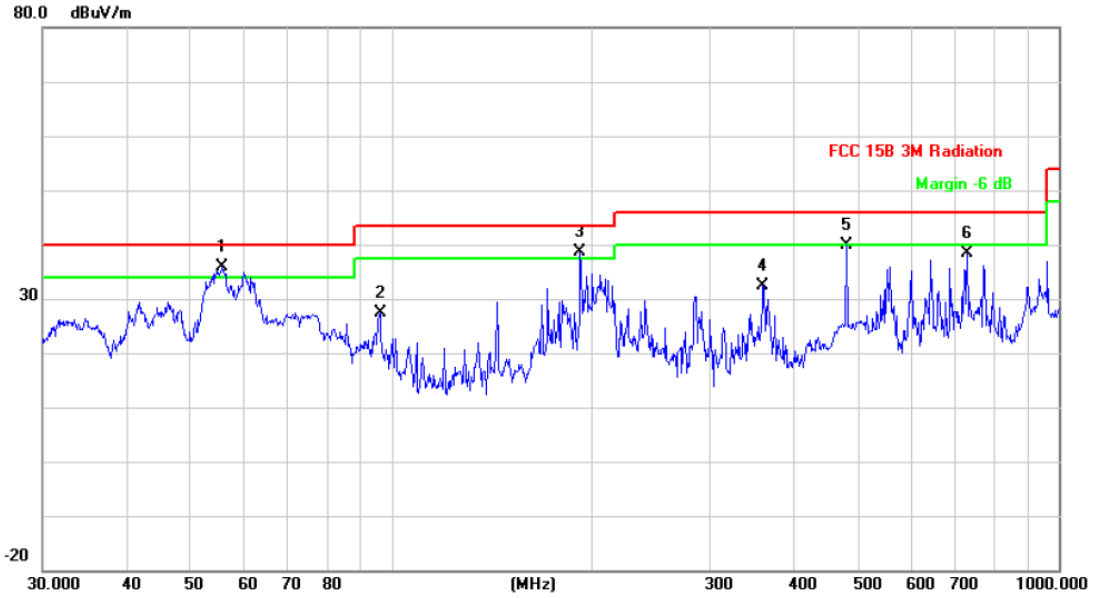

No.	Mk.	Freq.	Reading Level	Correct Factor	Measure-ment	Limit	Over	
		MHz	dBuV	dB/m	dBuV/m	dBuV/m	dB	Detector
1	*	55.8046	60.32	-24.47	35.85	40.00	-4.15	peak
2		96.0986	49.66	-22.16	27.50	43.50	-16.00	peak
3	!	191.7450	59.32	-20.81	38.51	43.50	-4.99	peak
4		360.4476	46.85	-14.55	32.30	46.00	-13.70	peak
5		480.5276	51.45	-11.62	39.83	46.00	-6.17	peak
6		729.3582	45.58	-7.13	38.45	46.00	-7.55	peak

Emission Level= Read Level+ Correct Factor

EUT:	MID	Model:	K711C
Temperature:	25 ℃	Relative Humidity:	55%
Test Voltage:	AC 120V/60 Hz		
Ant. Pol.	Horizontal		
Test Mode:	Mode 2: AC Charging with USB Reading		
Remark:	N/A		

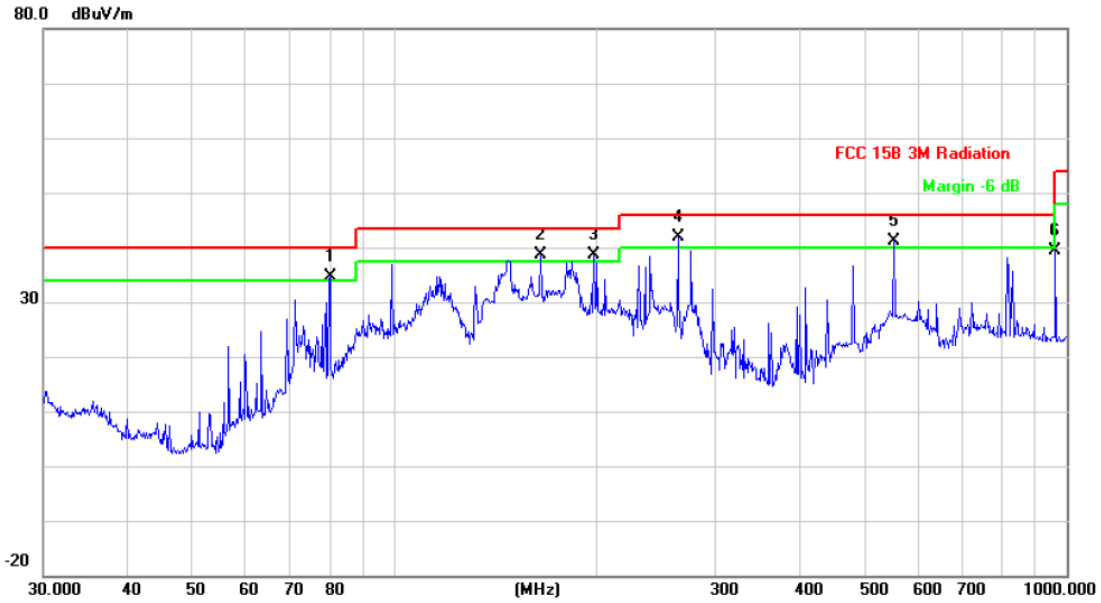

No.	Mk.	Freq.	Reading Level	Correct Factor	Measure-ment	Limit	Over	
		MHz	dBuV	dB/m	dBuV/m	dBuV/m	dB	Detector
1	!	80.0806	58.02	-23.28	34.74	40.00	-5.26	peak
2	!	164.9073	59.51	-20.84	38.67	43.50	-4.83	peak
3	!	197.8926	59.21	-20.49	38.72	43.50	-4.78	peak
4	*	263.8190	59.69	-17.82	41.87	46.00	-4.13	peak
5	!	552.8831	51.31	-10.13	41.18	46.00	-4.82	peak
6		962.1621	44.24	-4.84	39.40	54.00	-14.60	peak

Emission Level= Read Level+ Correct Factor

EUT:	MID	Model:	K711C
Temperature:	25 ℃	Relative Humidity:	55%
Test Voltage:	AC 120V/60 Hz		
Ant. Pol.	Vertical		
Test Mode:	Mode 2: AC Charging with USB Reading		
Remark:	N/A		

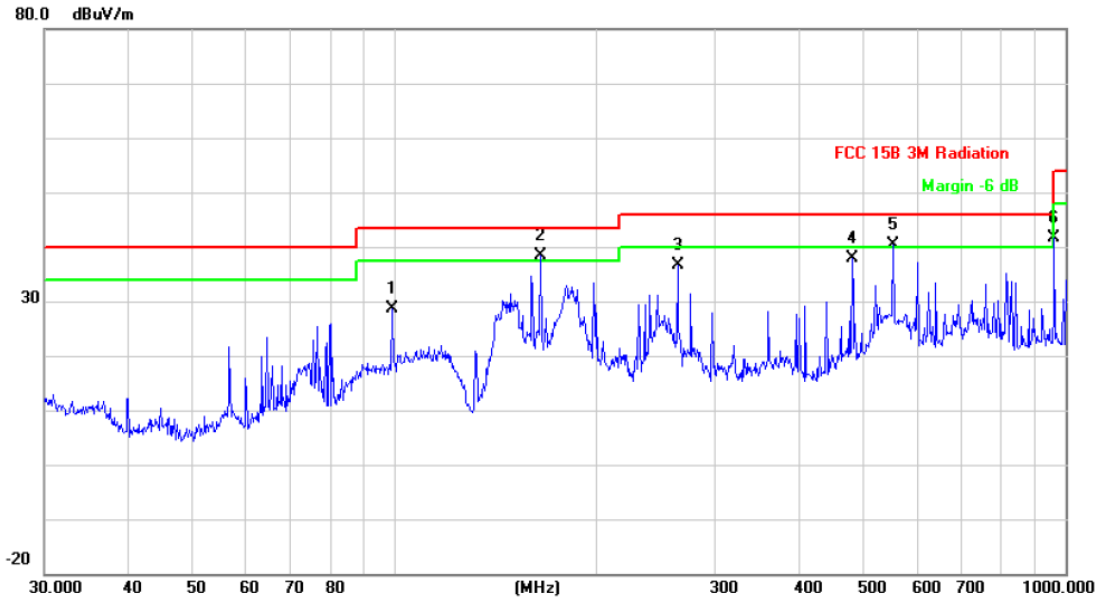

No.	Mk.	Freq.	Reading Level	Correct Factor	Measure-ment	Limit	Over	
		MHz	dBuV	dB/m	dBuV/m	dBuV/m	dB	Detector
1		98.8324	50.64	-21.92	28.72	43.50	-14.78	peak
2	*	164.9073	59.16	-20.84	38.32	43.50	-5.18	peak
3		263.8190	54.52	-17.82	36.70	46.00	-9.30	peak
4		480.5276	49.40	-11.62	37.78	46.00	-8.22	peak
5	!	552.8831	50.56	-10.13	40.43	46.00	-5.57	peak
6		962.1621	46.37	-4.84	41.53	54.00	-12.47	peak

Emission Level= Read Level+ Correct Factor

EUT:	MID	Model:	K711C
Temperature:	25 ℃	Relative Humidity:	55%
Test Voltage:	AC 120V/60 Hz		
Ant. Pol.	Horizontal		
Test Mode:	Mode 3: AC Charging with Camera Working		
Remark:	N/A		

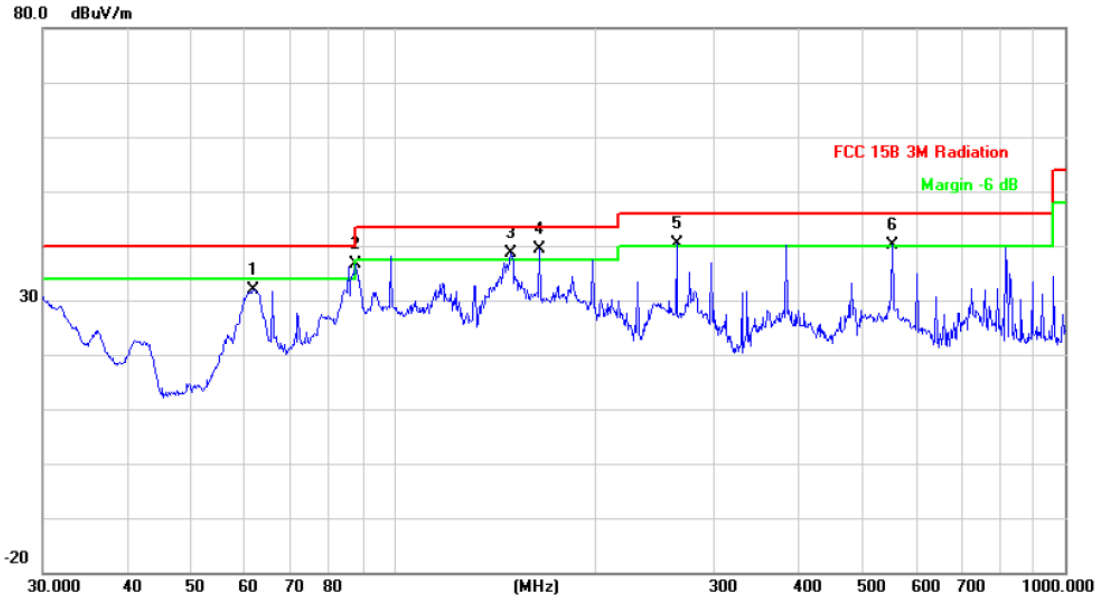

No.	Mk.	Freq.	Reading Level	Correct Factor	Measure-ment	Limit	Over	
		MHz	dBuV	dB/m	dBuV/m	dBuV/m	dB	Detector
1		61.7781	56.21	-24.36	31.85	40.00	-8.15	peak
2	*	87.7248	59.48	-22.82	36.66	40.00	-3.34	peak
3	!	149.4857	59.96	-21.22	38.74	43.50	-4.76	peak
4	!	164.9073	60.21	-20.84	39.37	43.50	-4.13	peak
5	!	263.8190	58.13	-17.82	40.31	46.00	-5.69	peak
6	!	552.8831	50.14	-10.13	40.01	46.00	-5.99	peak

Emission Level= Read Level+ Correct Factor

EUT:	MID	Model:	K711C
Temperature:	25 ℃	Relative Humidity:	55%
Test Voltage:	AC 120V/60 Hz		
Ant. Pol.	Vertical		
Test Mode:	Mode 3: AC Charging with Camera Working		
Remark:	N/A		

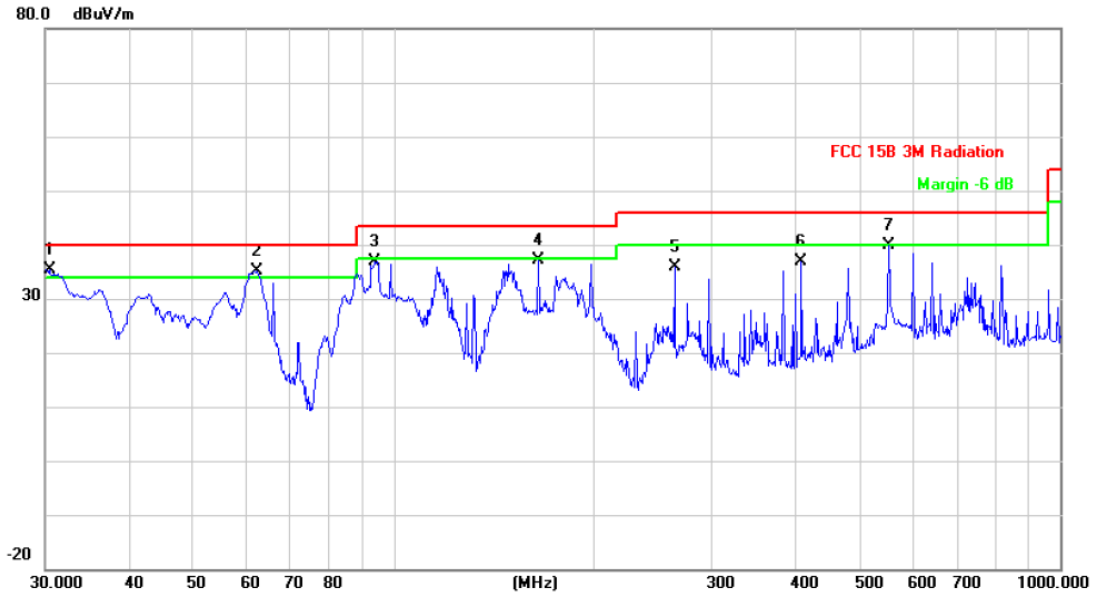

No.	Mk.	Freq.	Reading Level	Correct Factor	Measure-ment	Limit	Over	
		MHz	dBuV	dB/m	dBuV/m	dBuV/m	dB	Detector
1	*	30.4237	49.64	-14.22	35.42	40.00	-4.58	peak
2	!	62.2128	59.50	-24.32	35.18	40.00	-4.82	peak
3		93.7685	59.35	-22.37	36.98	43.50	-6.52	peak
4		164.9073	57.97	-20.84	37.13	43.50	-6.37	peak
5		263.8190	53.68	-17.82	35.86	46.00	-10.14	peak
6		408.9460	49.64	-12.84	36.80	46.00	-9.20	peak
7		552.8831	49.98	-10.13	39.85	46.00	-6.15	peak

Emission Level= Read Level+ Correct Factor

EUT:	MID	Model:	K711C
Temperature:	25 ℃	Relative Humidity:	55%
Test Voltage:	AC 120V/60 Hz		
Ant. Pol.	Horizontal		
Test Mode:	Mode 4: AC Charging with WiFi Link		
Remark:	N/A		

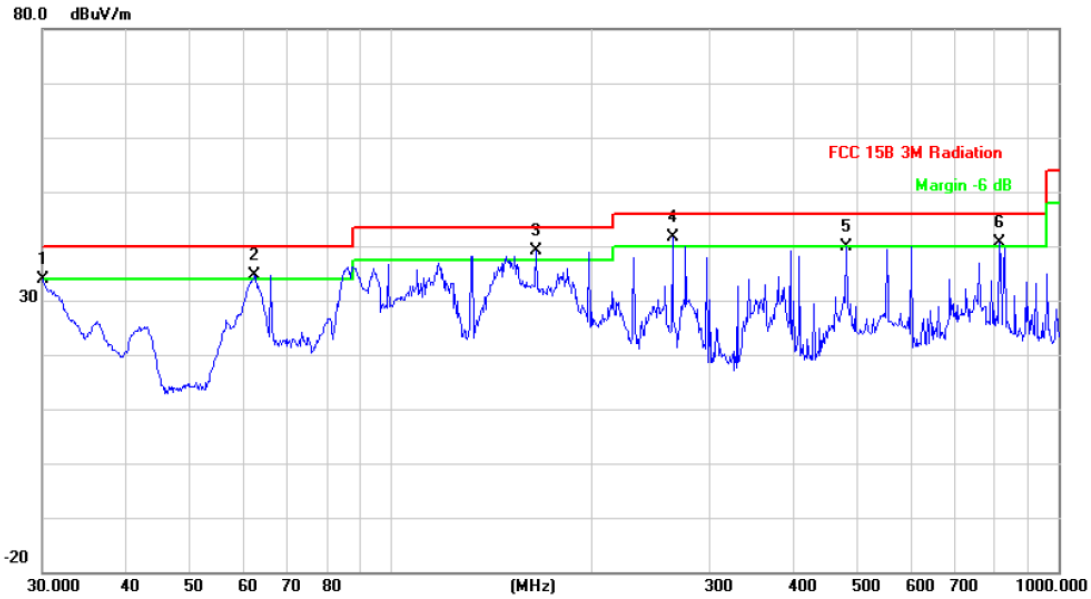

No.	Mk.	Freq.	Reading Level	Correct Factor	Measure-ment	Limit	Over	
		MHz	dBuV	dB/m	dBuV/m	dBuV/m	dB	Detector
1		30.0000	47.76	-13.96	33.80	40.00	-6.20	peak
2	!	62.4313	58.93	-24.30	34.63	40.00	-5.37	peak
3	!	164.9072	59.85	-20.84	39.01	43.50	-4.49	peak
4	*	263.8190	59.36	-17.82	41.54	46.00	-4.46	peak
5		480.5276	51.41	-11.62	39.79	46.00	-6.21	peak
6	!	815.9678	47.09	-6.37	40.72	46.00	-5.28	peak

Emission Level= Read Level+ Correct Factor

EUT:	MID	Model:	K711C
Temperature:	25 ℃	Relative Humidity:	55%
Test Voltage:	AC 120V/60 Hz		
Ant. Pol.	Vertical		
Test Mode:	Mode 4: AC Charging with WiFi Link		
Remark:	N/A		

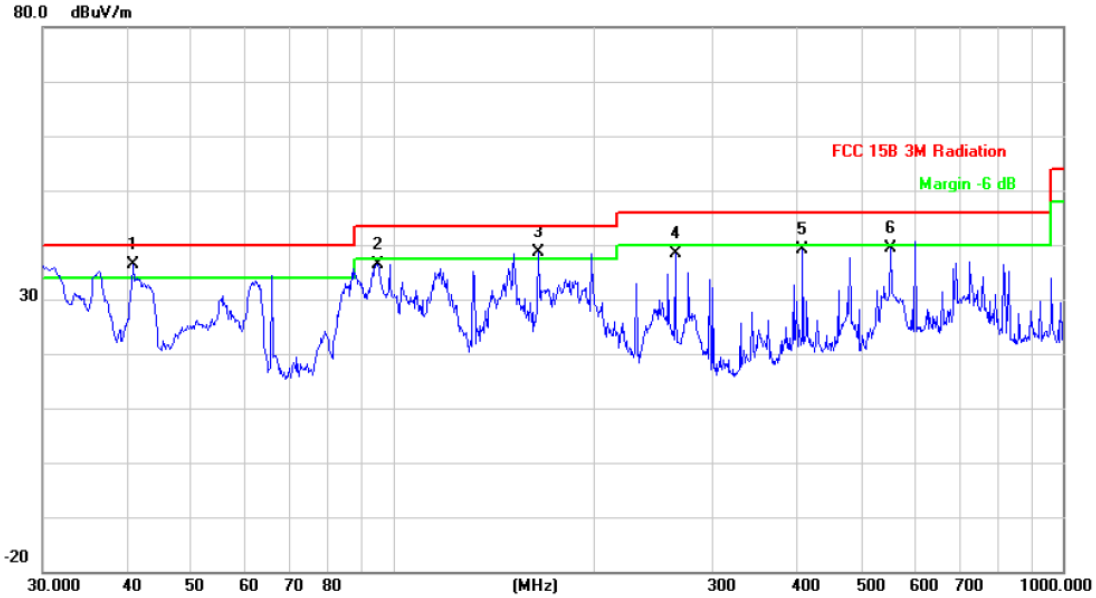

No.	Mk.	Freq.	Reading Level	Correct Factor	Measure-ment	Limit	Over	
		MHz	dBuV	dB/m	dBuV/m	dBuV/m	dB	Detector
1	*	40.9881	56.87	-20.58	36.29	40.00	-3.71	peak
2		94.7600	58.75	-22.28	36.47	43.50	-7.03	peak
3	!	164.9073	59.45	-20.84	38.61	43.50	-4.89	peak
4		263.8190	56.09	-17.82	38.27	46.00	-7.73	peak
5		408.9460	51.88	-12.84	39.04	46.00	-6.96	peak
6		552.8831	49.55	-10.13	39.42	46.00	-6.58	peak

Emission Level= Read Level+ Correct Factor

1 GHz~26.5GHz

EUT:	MID	**Model:**	K711C
Temperature:	25 ℃	**Relative Humidity:**	55%
Test Voltage:	AC 120V/60 Hz		
Ant. Pol.	Horizontal		
Test Mode:	Mode 4: AC Charging with WiFi Link		
Remark:	No report for the emission which more than 10 dB below the prescribed limit.		

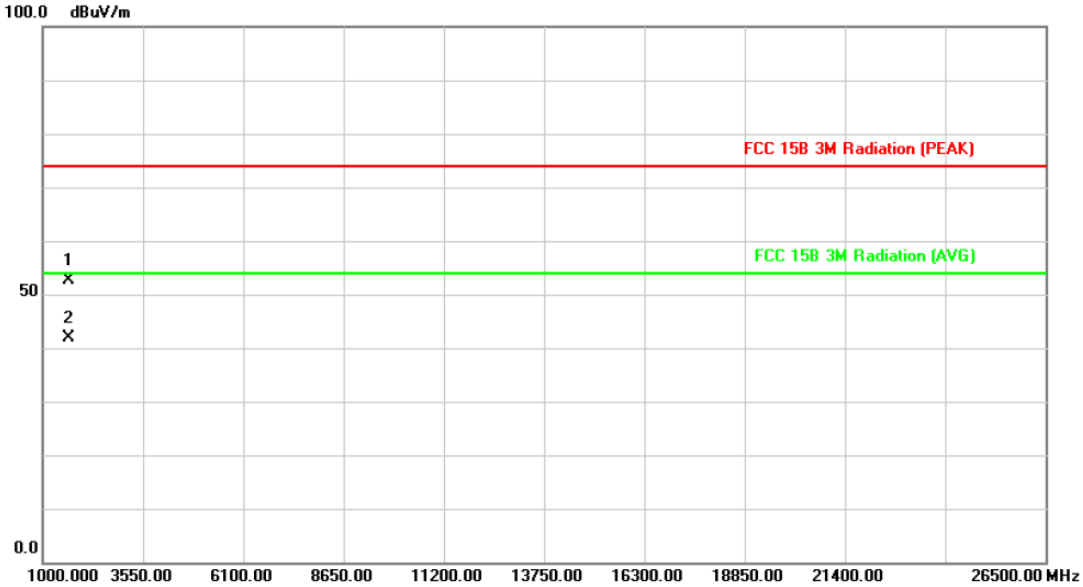

No.	Mk.	Freq.	Reading Level	Correct Factor	Measure-ment	Limit	Over	
		MHz	dBuV	dB/m	dBuV/m	dBuV/m	dB	Detector
1		1652.000	53.61	-1.00	52.61	74.00	-21.39	peak
2	*	1652.000	42.84	-1.00	41.84	54.00	-12.16	AVG

Emission Level= Read Level+ Correct Factor

EUT:	MID	Model:	K711C
Temperature:	25 ℃	Relative Humidity:	55%
Test Voltage:	AC 120V/60 Hz		
Ant. Pol.	Vertical		
Test Mode:	Mode 4: AC Charging with WiFi Link		
Remark:	No report for the emission which more than 10 dB below the prescribed limit.		

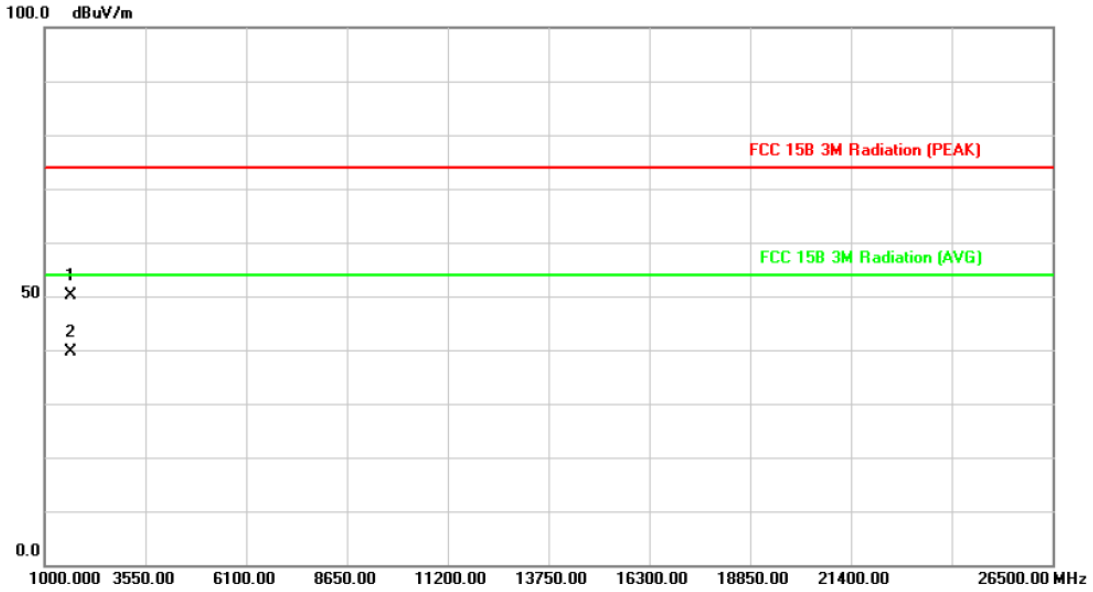

No.	Mk.	Freq.	Reading Level	Correct Factor	Measure-ment	Limit	Over	
		MHz	dBuV	dB/m	dBuV/m	dBuV/m	dB	Detector
1		1652.000	51.05	-1.00	50.05	74.00	-23.95	peak
2	*	1652.000	40.67	-1.00	39.67	54.00	-14.33	AVG

Emission Level= Read Level+ Correct Factor