FCC Test Report

FCC ID: OI2K786

Original Grant for Computing Device Peripheral

Report No.	:	TB-FCC139595
Applicant	:	ILIFE TECHNOLOGY(HK) LIMITED
Equipment Under Test (EUT)		
EUT Name	:	MID
Model No.	:	K786
Serial No.	:	N/A
Brand Name	:	N/A
Receipt Date	:	2014-02-20
Test Date	:	2014-02-21 to 2014-03-04
Issue Date	:	2014-03-06
Standards	:	FCC Part 15: 2012, Subpart B, Class B
Test Method	:	ANSI C63.4-2003
Conclusions	:	**PASS**

In the configuration tested, the EUT complied with the standards specified above,

The EUT technically complies with the FCC requirements

Test/Witness Engineer : WAN SU

Approved& Authorized :

This report details the results of the testing carried out on one sample. The results contained in this test report do not relate to other samples of the same product. The manufacturer should ensure that all products in series production are in conformity with the product sample detailed in the report.

1A/F., Bldg.6, Yusheng Industrial Zone, The National Road No.107 Xixiang Section 467, Xixiang, Bao'an, Shenzhen, China
Tel: +86 75526509301 Fax: +86 75526509195

Comments

1. GENERAL INFORMATION ABOUT EUT 3
1.1 Client Information 3
1.2 General Description of EUT (Equipment Under Test) 3
1.3 Block Diagram Showing the Configuration of System Tested 4
1.4 Description of Support Units 4
1.5 Description of Test Mode 5
1.6 Test Facility 5
2. TEST SUMMARY 7
3. CONDUCTED EMISSION TEST 8
3.1 Test Standard and Limit 8
3.1.1Test Standard 8
3.1.2 Test Limit 8
3.2 Test Setup 8
3.3 Test Procedure 8
3.4 Test Equipment Used 9
3.5 EUT Operating Mode 9
3.6 Deviation 9
3.7 Test Data 9
4. RADIATED EMISSION TEST 14
4.1 Test Standard and Limit 14
4.1.1 Test Standard 14
4.1.2 Test Limit 14
4.2 Test Setup 14
4.3 Test Procedure 15
4.4 Test Equipment 15
4.5 EUT Operating Condition 15
4.6 Deviation 16
4.7 Test Data 16

1. General Information About EUT

1.1 Client Information

Applicant	:	ILIFE TECHNOLOGY(HK) LIMITED
Address	:	3rd Floor, Bld. 3, Lijincheng Industrial Park, The East of Gongye Road, Longhua, Shenzhen, China
Applicant	:	ILIFE TECHNOLOGY(HK) LIMITED
Address	:	3rd Floor, Bld. 3, Lijincheng Industrial Park, The East of Gongye Road, Longhua, Shenzhen, China

1.2 General Description of EUT (Equipment Under Test)

EUT Name	:	MID
Model No.	:	K786
Model difference	:	N/A
Power Supply	:	USB Charging from PC DC power supplied by AC/DC Adapter DC Voltage supplied from Li-Polymer battery.
Power Rating	:	USB DC 5V form PC. AC/DC Adapter(BLT-XC0520B): Input: AC 100~240V 50/60Hz Output: DC 5V 2A DC 3.7V 3000mAh from Li-ion battery
Connecting I/O Port(s)	:	The equipent have USB port for link with PC, so the equipment is considered as a Computing Device Peripheral.
Note: The equipment have WiFi (802.11b/g/n) mode, WiFi part have test comply with FCC Part 15C Rules. More detailed features description, please refer to the manufacturer's specifications or the User's Manual.		

1.3 Block Diagram Showing the Configuration of System Tested

USB Charging with loading to PC

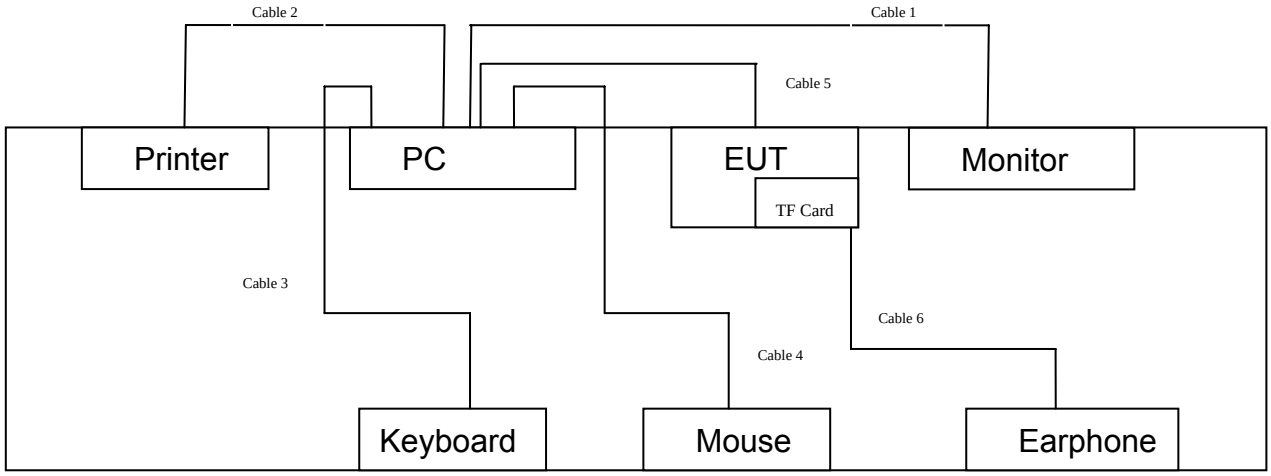

AC Charging with USB Reading

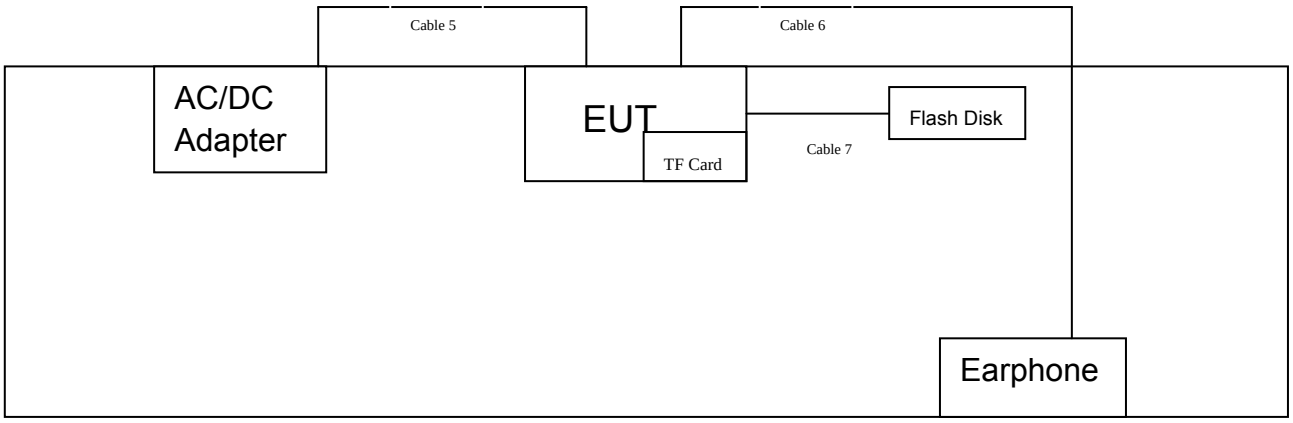

1.4 Description of Support Units

Equipment Information				
Name	**Model**	**S/N**	**Manufacturer**	**Used "√"**
Printer	HP1505n	VNF3G06957	HP	√
LCD Monitor	E170Sc	----	DELL	√
PC	OPTIPLEX380	----	DELL	√
Keyboard	L100	U01C	DELL	√
Mouse	M-UARDEL7	----	DELL	√
TF Card	1GB	----	Kingston	√
Flash Disk	2GB	----	SSK	√

Notebook	B470A2450	VNF3G06957	Lenovo	
Earphone	----	----	----	Accessories
Cable Information				
Number	**Shielded Type**	**Ferrite Core**	**Length**	**Note**
Cable 1	YES	YES(2)	1.8M	
Cable 2	YES	YES(1)	2.0M	
Cable 3	YES	NO	1.5M	
Cable 4	YES	NO	1.5M	
Cable 5	NO	NO	0.8M	Accessories
Cable 6	NO	NO	1.15M	Accessories
Cable 7	NO	NO	0.3M	Accessories

1.5 Description of Test Mode

Mode	Description
Mode 1	AC Charging with USB Reading
Mode 2	USB Charging with loading to PC
Mode 3	AC Charging with WiFi Link

To investigate the maximum EMI emission characteristics generates from EUT, the test system was pre-scanning tested base on the consideration of the EUT operation mode, and the maximum emission levels of the conducted and radiated emissions are compared to the FCC Part 15 Subpart B (Class B) limits.
Note: The test results for EUT's RF functions are contained in another Certification Report.

1.6 Test Facility

The tests were performed at:
Shenzhen Certification Technology Service Co., Ltd
2F, Building B, East Area of Nanchang Second Industrial Zone, Gushu 2nd Road, Bao'an District, Shenzhen, 518126, China
Tel: 86-755-86375552 Fax: 86-755-26736857

The test report was fulfilled by Shenzhen Toby Technology Co., Ltd. Shenzhen Toby

Technology Co., Ltd. is assumed full responsibility for the accuracy and completeness of these measurements results.

2. Test Summary

FCC Part15, Subpart B				
Section	**Test Method**	**Test Item**	**Limit**	**Judgment**
15.109	ANSI C63.4:2003	Radiated Emission (30M~1GHz)	Class B	PASS
15.107	ANSI C63.4:2003	Conducted Emission (9KHz to 30MHz)	Class B	PASS
Note: N/A is an abbreviation for Not Applicable.				

3. Conducted Emission Test

3.1 Test Standard and Limit

3.1.1Test Standard

FCC Part 15.107

3.1.2 Test Limit

Conducted Emission Test Limit

Frequency (MHz)	Conducted Limit (dBuV)	
	Quasi-peak Level	Average Level
0.15~0.5	66 ~ 56 *	56 ~ 46 *
0.5~5.0	56.00	46.00
5.0~30.0	60.00	50.00
Notes:(1) *Decreasing linearly with logarithm of the frequency. (2) The lower limit shall apply at the transition frequencies.		

3.2 Test Setup

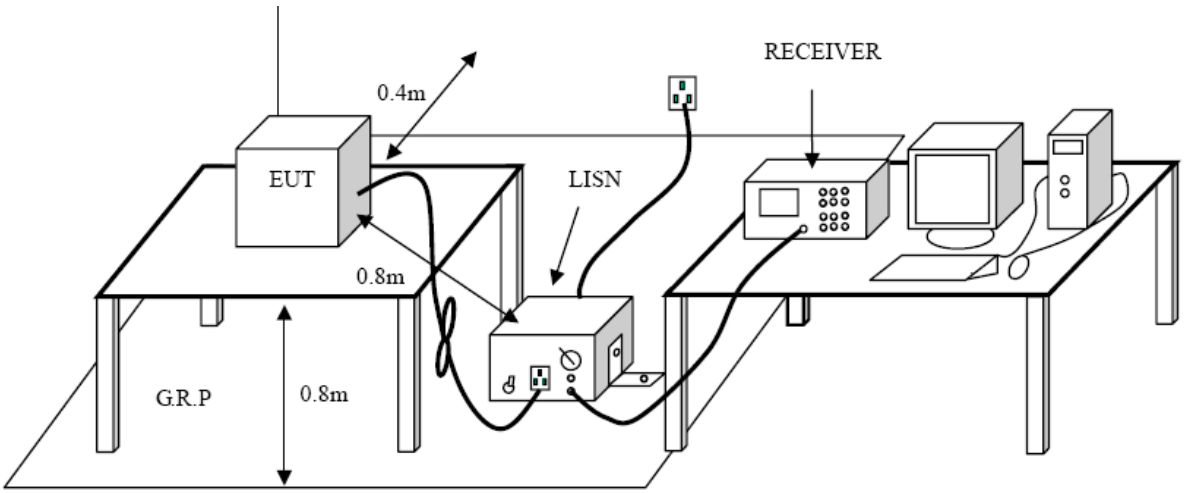

3.3 Test Procedure

The EUT was placed 0.8 meters from the horizontal ground plane with EUT being connected to the power mains through a line impedance stabilization network (LISN). All other support equipments powered from additional LISN(s). The LISN provide 50 Ohm/ 50uH of coupling impedance for the measuring instrument.

Interconnecting cables that hang closer than 40 cm to the ground plane shall be folded back and forth in the center forming a bundle 30 to 40 cm long.

I/O cables that are not connected to a peripheral shall be bundled in the center. The end of the cable may be terminated, if required, using the correct terminating impedance.

The overall length shall not exceed 1 m.

LISN at least 80 cm from nearest part of EUT chassis.

The bandwidth of EMI test receiver is set at 9kHz, and the test frequency band is from 0.15MHz to 30MHz.

For the actual test configuration, please refer to the EUT test Photos.

3.4 Test Equipment Used

Description	Manufacturer	Model No.	Serial No.	Cal. Date	Cal. Due Date
EMI Test Receiver	ROHDE& SCHWARZ	ESCI	100321	2013-08-10	2014-08-09
50ΩCoaxial Switch	Anritsu	MP59B	X10321	2013-08-10	2014-08-09
L.I.S.N	Rohde & Schwarz	ENV216	101131	2013-08-10	2014-08-09
L.I.S.N	SCHWARZBECK	NNBL 8226-2	8226-2/164	2013-08-10	2014-08-09

3.5 EUT Operating Mode

(1) Setup the EUT and peripherals refer to the description of test mode.

3.6 Deviation

The test is no deviation from the standard.

3.7 Test Data

Please see the next page.

E.U.T :	MID	Model Name :	K786
Temperature :	21°C	Relative Humidity :	51 %
Terminal	Line		
Test Voltage :	AC 120 V / 60Hz		
Test Mode :	Mode 1: AC Charging with USB Reading		

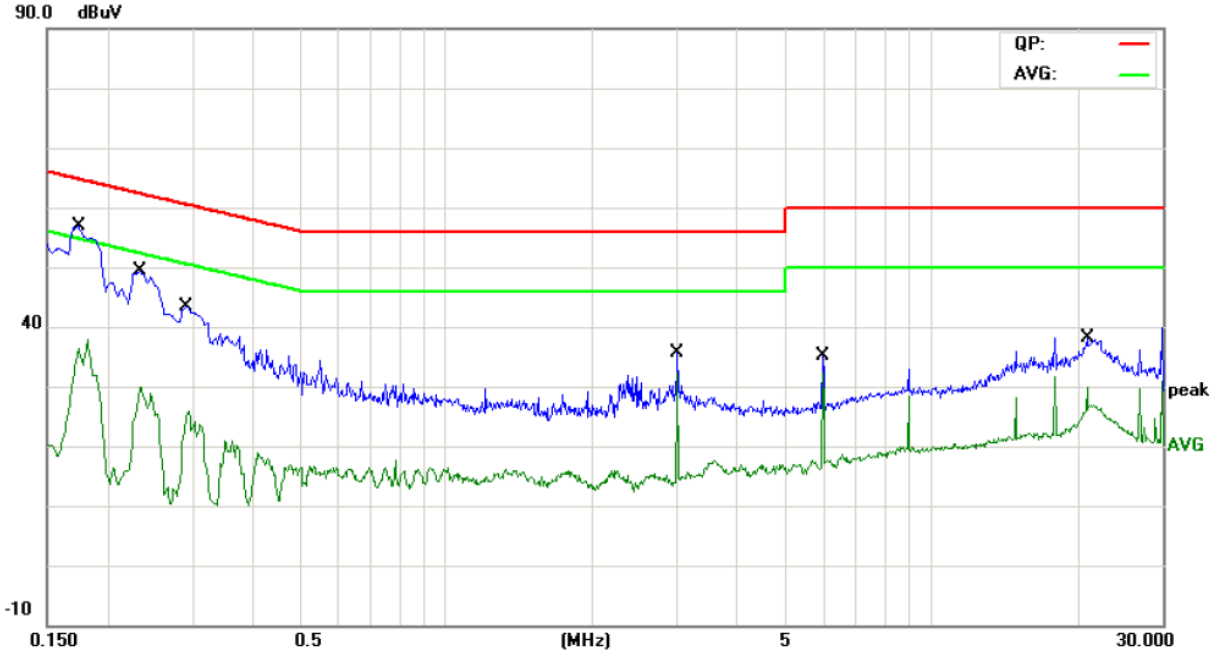

No.	Mk.	Freq.	Reading Level	Correct Factor	Measure-ment	Limit	Over		
		MHz	dBuV	dB	dBuV	dBuV	dB	Detector	Comment
1	*	0.1740	42.88	10.12	53.00	64.76	-11.76	QP	
2		0.1740	22.76	10.12	32.88	54.76	-21.88	AVG	
3		0.2340	35.68	10.11	45.79	62.30	-16.51	QP	
4		0.2340	17.21	10.11	27.32	52.30	-24.98	AVG	
5		0.2900	29.92	10.09	40.01	60.52	-20.51	QP	
6		0.2900	12.45	10.09	22.54	50.52	-27.98	AVG	
7		2.9940	24.09	10.06	34.15	56.00	-21.85	QP	
8		2.9940	22.33	10.06	32.39	46.00	-13.61	AVG	
9		5.9899	22.43	10.06	32.49	60.00	-27.51	QP	
10		5.9899	20.86	10.06	30.92	50.00	-19.08	AVG	
11		20.9619	23.29	10.06	33.35	60.00	-26.65	QP	
12		20.9619	17.21	10.06	27.27	50.00	-22.73	AVG	

E.U.T :	MID	Model Name :	K786
Temperature :	26°C	Relative Humidity :	51 %
Terminal	Neutral		
Test Voltage :	AC 120 V / 60Hz		
Test Mode :	Mode 1: AC Charging with USB Reading		

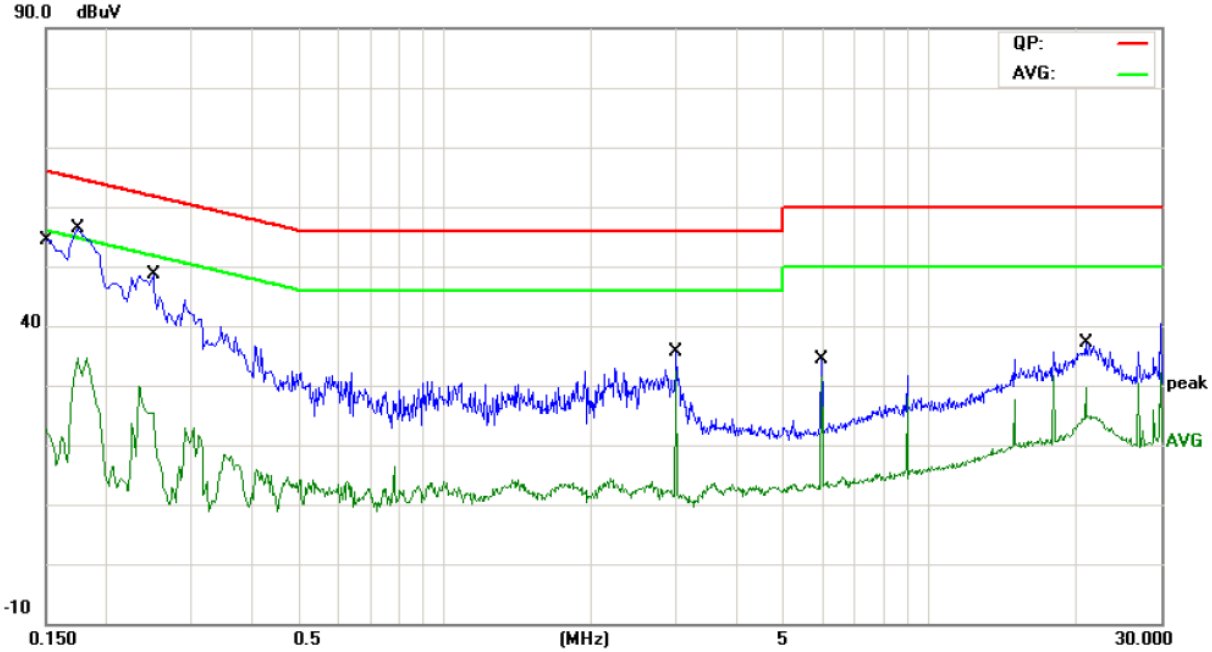

No.	Mk.	Freq.	Reading Level	Correct Factor	Measure-ment	Limit	Over		
		MHz	dBuV	dB	dBuV	dBuV	dB	Detector	Comment
1		0.1500	34.41	10.12	44.53	65.99	-21.46	QP	
2		0.1500	8.22	10.12	18.34	55.99	-37.65	AVG	
3	*	0.1740	42.57	10.12	52.69	64.76	-12.07	QP	
4		0.1740	21.98	10.12	32.10	54.76	-22.66	AVG	
5		0.2500	33.75	10.10	43.85	61.75	-17.90	QP	
6		0.2500	13.48	10.10	23.58	51.75	-28.17	AVG	
7		2.9940	24.14	10.06	34.20	56.00	-21.80	QP	
8		2.9940	22.30	10.06	32.36	46.00	-13.64	AVG	
9		5.9860	22.99	10.06	33.05	60.00	-26.95	QP	
10		5.9860	22.30	10.06	32.36	50.00	-17.64	AVG	
11		20.9540	23.80	10.06	33.86	60.00	-26.14	QP	
12		20.9540	19.78	10.06	29.84	50.00	-20.16	AVG	

E.U.T :	MID	Model Name :	K786
Temperature :	21°C	Relative Humidity :	51 %
Terminal	Line		
Test Voltage :	AC 120 V / 60Hz		
Test Mode :	Mode 2: USB Charging with loading to PC		

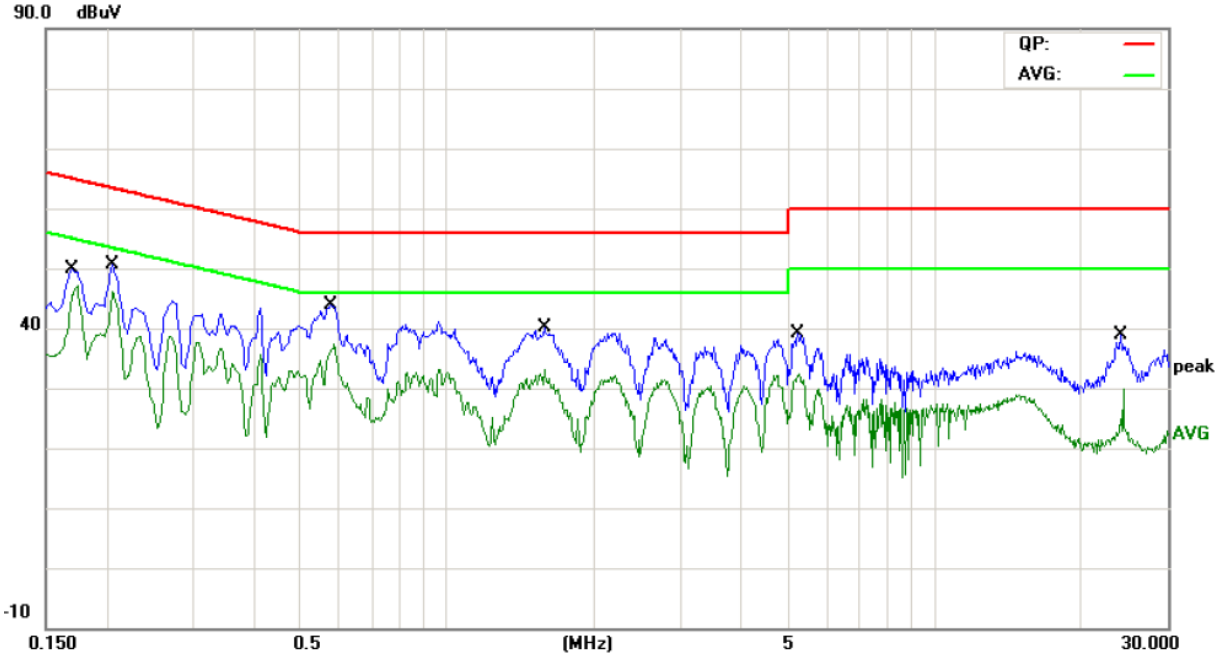

No.	Mk.	Freq.	Reading Level	Correct Factor	Measure-ment	Limit	Over		
		MHz	dBuV	dB	dBuV	dBuV	dB	Detector	Comment
1		0.1700	38.94	9.96	48.90	64.96	-16.06	QP	
2		0.1700	36.48	9.96	46.44	54.96	-8.52	AVG	
3		0.2060	38.77	10.02	48.79	63.36	-14.57	QP	
4	*	0.2060	35.85	10.02	45.87	53.36	-7.49	AVG	
5		0.5780	33.01	10.06	43.07	56.00	-12.93	QP	
6		0.5780	25.85	10.06	35.91	46.00	-10.09	AVG	
7		1.5820	27.66	10.06	37.72	56.00	-18.28	QP	
8		1.5820	22.57	10.06	32.63	46.00	-13.37	AVG	
9		5.2260	24.91	9.97	34.88	60.00	-25.12	QP	
10		5.2260	21.63	9.97	31.60	50.00	-18.40	AVG	
11		24.0220	20.88	10.16	31.04	60.00	-28.96	QP	
12		24.0220	11.05	10.16	21.21	50.00	-28.79	AVG	

E.U.T :	MID	Model Name :	K786
Temperature :	26°C	Relative Humidity :	51 %
Terminal	Neutral		
Test Voltage :	AC 120 V / 60Hz		
Test Mode :	Mode 2: USB Charging with loading to PC		

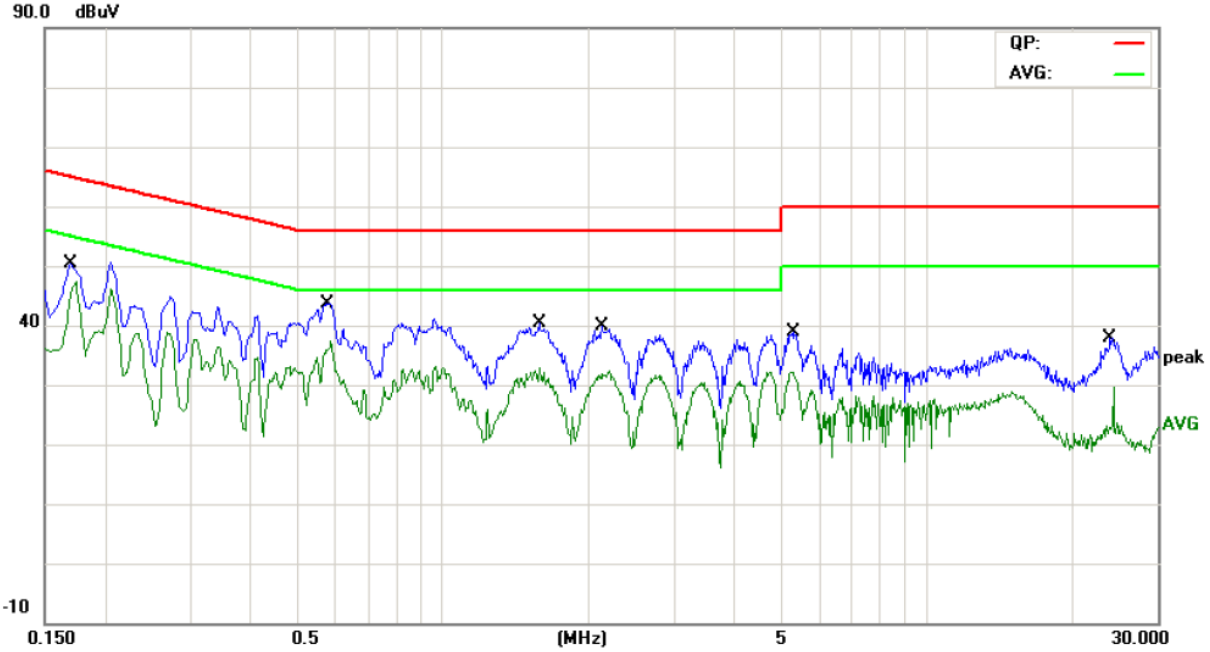

No.	Mk.	Freq.	Reading Level	Correct Factor	Measure-ment	Limit	Over		
		MHz	dBuV	dB	dBuV	dBuV	dB	Detector	Comment
1		0.1700	38.92	10.12	49.04	64.96	-15.92	QP	
2	*	0.1700	36.46	10.12	46.58	54.96	-8.38	AVG	
3		0.5780	33.01	10.02	43.03	56.00	-12.97	QP	
4		0.5780	25.85	10.02	35.87	46.00	-10.13	AVG	
5		1.5820	27.90	10.10	38.00	56.00	-18.00	QP	
6		1.5820	22.80	10.10	32.90	46.00	-13.10	AVG	
7		2.1300	26.24	10.06	36.30	56.00	-19.70	QP	
8		2.1300	21.29	10.06	31.35	46.00	-14.65	AVG	
9		5.2940	24.84	10.06	34.90	60.00	-25.10	QP	
10		5.2940	21.45	10.06	31.51	50.00	-18.49	AVG	
11		23.9300	19.60	10.06	29.66	60.00	-30.34	QP	
12		23.9300	9.58	10.06	19.64	50.00	-30.36	AVG	

4. Radiated Emission Test

4.1 Test Standard and Limit

4.1.1 Test Standard
FCC Part 15.109
4.1.2 Test Limit

Radiated Emission Limit

Frequency (MHz)	Field Strength (dBuV/m)	Measurement Distance (meters)
30~88	40	3
88~216	43.5	3
216~960	46	3
Above 960	54	3
Note: Emission Level(dBuV/m)=20log Emission Level(uV/m)		

4.2 Test Setup

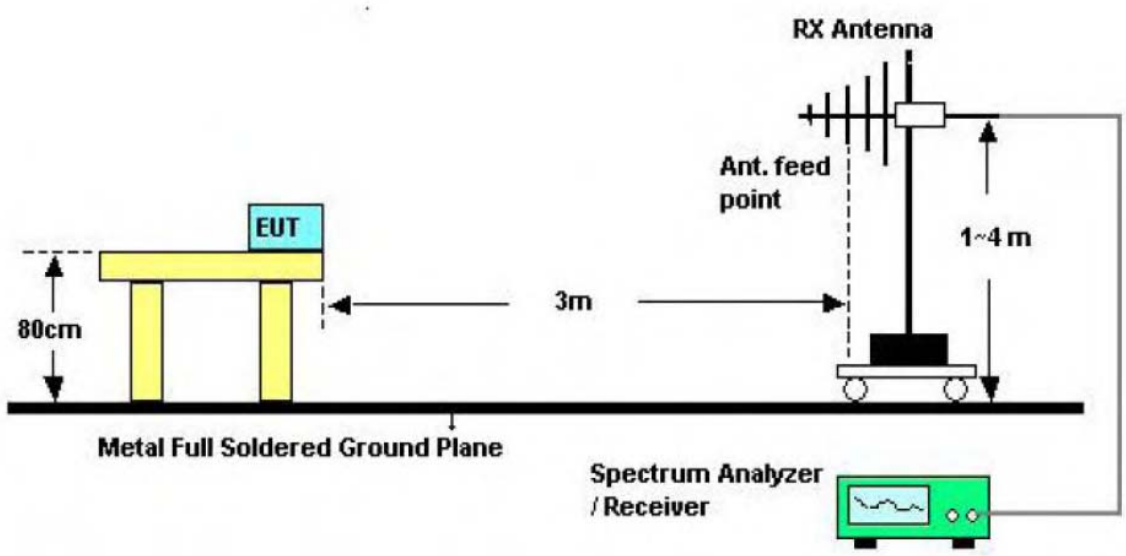

30MHz to 1000MHz Test Setup

4.3 Test Procedure

(1) The measuring distance of 3m shall be used for measurements at frequency from 30MHz up to1GHz.
(2) The EUT was placed on the top of a rotating table 0.8 meters above the ground. The table was rotated 360 degrees to determine the position of the highest radiation.
(3) The height of the equipment or of the substitution antenna shall be 0.8m, the height of the test antenna shall vary between 1 m to 4 m. Both horizontal and vertical polarizations of the antenna are set to make the measurement.
(4) The initial step in collecting radiated emission data is a spectrum analyzer peak detector mode pre-scanning the measurement frequency range. Significant peaks are then marked and then Quasi Peak detector mode re-measured.
(5) If the Peak Mode measured value compliance with and lower than Quasi Peak Mode Limit, the EUT shall be deemed to meet QP Limits and then no additional QP Mode measurement performed.
(6) For more details, please refer to the EUT Test Photos.

4.4 Test Equipment

Description	Manufacturer	Model No.	Serial No.	Cal. Date	Cal. Due Date
Spectrum Analyzer	ROHDE& SCHWARZ	FSP30	DE25181	2013-12-30	2014-12-29
Spectrum Analyzer	Agilent	E4407B	MY49510055	2013-12-30	2014-12-29
EMI Test Receiver	ROHDE& SCHWARZ	ESCI	101165	2013-12-30	2014-12-29
Bilog Antenna	SCHWARZBECK	VULB9168	9168-438	2014-02-11	2015-02-10
Horn Antenna	SCHWARZBECK	BBHA 9120D	BBHA9120D	2014-02-11	2015-02-10
Horn Antenna	SCHWARZBECK	BBHA 9170	BBHA9170D	2014-02-11	2015-02-10
Active Loop Antenna	Beijing Daze	ZN30900A	SEL0097	2014-02-11	2015-02-10
Pre-amplifier	SCHWARZBECK	BBV9743	9743-019	2013-10-30	2014-10-29
Pre-amplifier	Quietek	AP-180C	CHM-0602012	2013-10-30	2014-10-29

4.5 EUT Operating Condition

(1) Setup the EUT and peripherals refer to the description of test mode.

4.6 Deviation

The test is no deviation from the standard.

4.7 Test Data

Below 1 GHz

E.U.T :	MID	Model Name :	K786
Temperature :	21°C	Relative Humidity :	51 %
Test Voltage :	AC 120 V / 60Hz		
Antenna. Pol:	Horizontal		
Test Mode :	Mode 1: AC Charging with USB Reading		

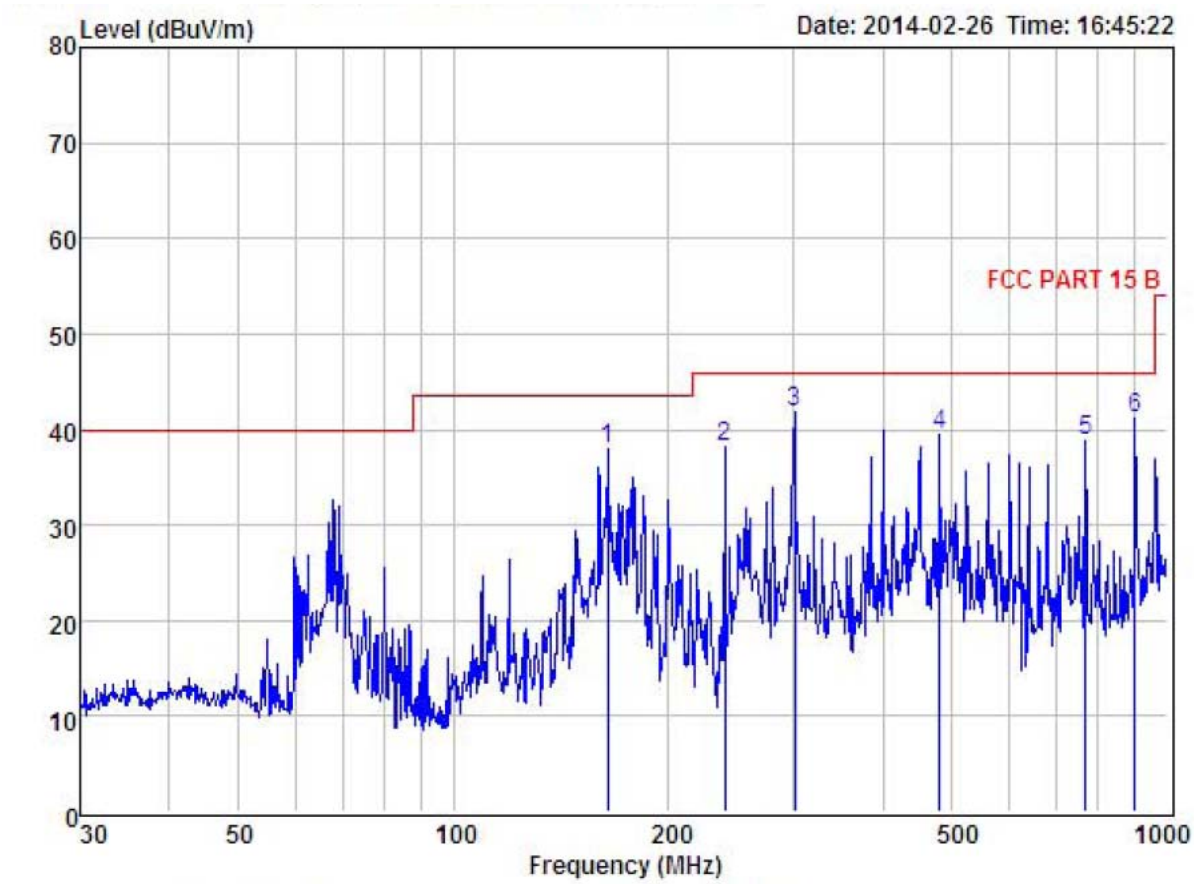

Item	Freq MHz	Read Level dBuV	Antenna Factor dB	Preamp Factor dB	Cable Loss dB	Level dBuV	Limit dBuV	Margin dBuV	Remark
1	164.33	50.58	13.76	26.91	0.45	37.88	43.50	-5.62	Peak
2	239.99	52.19	11.45	26.07	0.53	38.10	46.00	-7.90	Peak
3	300.37	52.50	12.85	24.19	0.64	41.80	46.00	-4.20	Peak
4	480.53	47.04	16.28	24.57	0.81	39.56	46.00	-6.44	Peak
5	768.75	42.67	20.47	25.68	1.30	38.76	46.00	-7.24	Peak
6	900.15	43.80	21.67	25.65	1.31	41.13	46.00	-4.87	Peak

Remark: Level = Read Level + Antenna Factor - Preamp Factor + Cable Loss

E.U.T :	MID	Model Name :	K786
Temperature :	21°C	Relative Humidity :	51 %
Test Voltage :	AC 120 V / 60Hz		
Antenna. Pol:	Vertical		
Test Mode :	Mode 1: AC Charging with USB Reading		

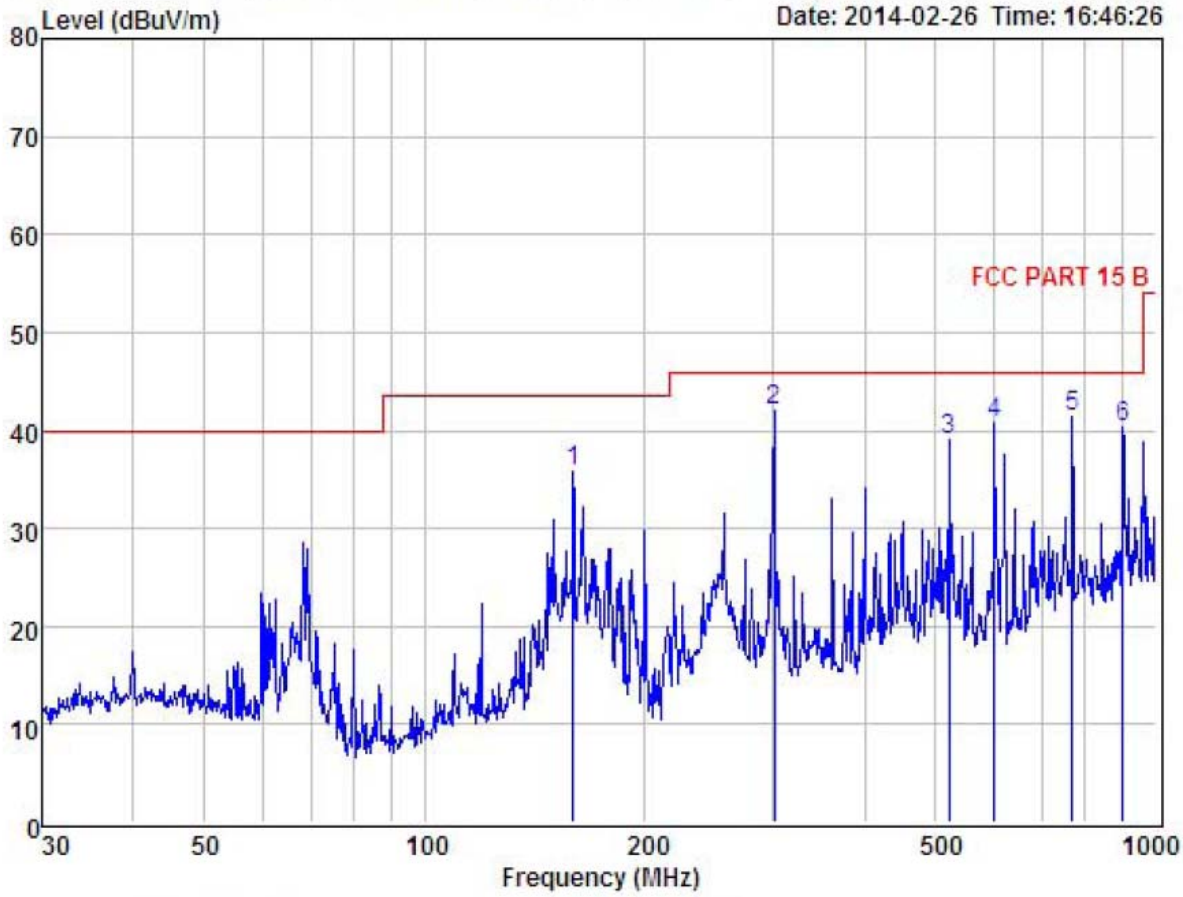

Item	Freq MHz	Read Level dBuV	Antenna Factor dB	Preamp Factor dB	Cable Loss dB	Level dBuV	Limit dBuV	Margin dBuV	Remark
1	159.78	48.15	14.14	26.91	0.44	35.82	43.50	-7.68	Peak
2	300.37	52.66	12.85	24.19	0.64	41.96	46.00	-4.04	Peak
3	520.89	45.94	16.89	24.66	0.94	39.11	46.00	-6.89	Peak
4	601.43	47.09	18.36	25.82	1.07	40.70	46.00	-5.30	Peak
5	768.75	45.31	20.47	25.68	1.30	41.40	46.00	-4.60	Peak
6	900.15	43.07	21.67	25.65	1.31	40.40	46.00	-5.60	Peak

Remark: Level = Read Level + Antenna Factor - Preamp Factor + Cable Loss

E.U.T :	MID	Model Name :	K786
Temperature :	21°C	Relative Humidity :	51 %
Test Voltage :	AC 120 V / 60Hz		
Antenna. Pol:	Horizontal		
Test Mode :	Mode 2: USB Charging with loading to PC		

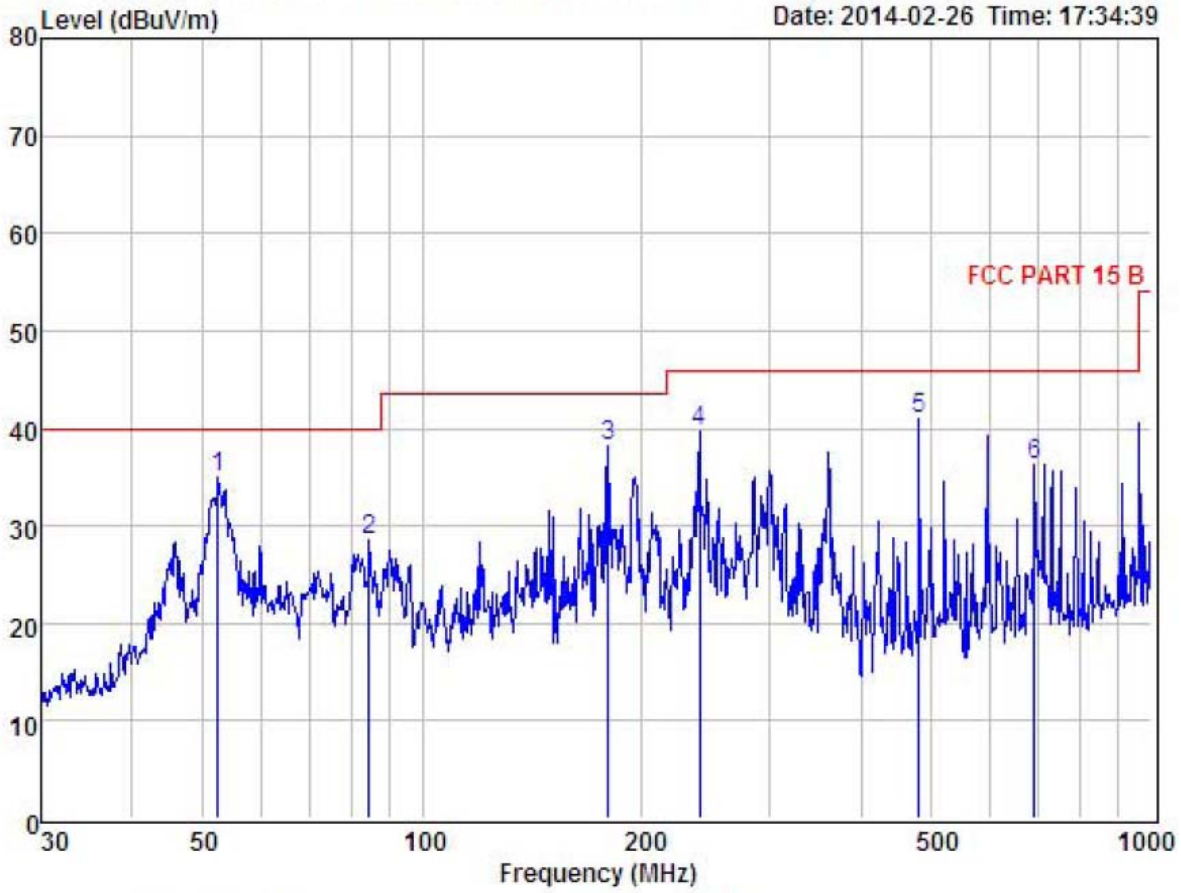

Item	Freq MHz	Read Level dBuV	Antenna Factor dB	Preamp Factor dB	Cable Loss dB	Level dBuV	Limit dBuV	Margin dBuV	Remark
1	52.39	47.56	13.38	26.16	0.24	35.02	40.00	-4.98	Peak
2	84.41	45.68	9.38	26.81	0.26	28.51	40.00	-11.49	Peak
3	180.02	52.93	11.68	26.93	0.47	38.15	43.50	-5.35	Peak
4	239.99	53.67	11.45	26.07	0.53	39.58	46.00	-6.42	Peak
5	480.53	48.41	16.28	24.57	0.81	40.93	46.00	-5.07	Peak
6	691.99	41.36	19.56	25.76	1.19	36.35	46.00	-9.65	Peak

Remark: Level = Read Level + Antenna Factor - Preamp Factor + Cable Loss

E.U.T :	MID	Model Name :	K786
Temperature :	21°C	Relative Humidity :	51 %
Test Voltage :	AC 120 V / 60Hz		
Antenna. Pol:	Vertical		
Test Mode :	Mode 2: USB Charging with loading to PC		

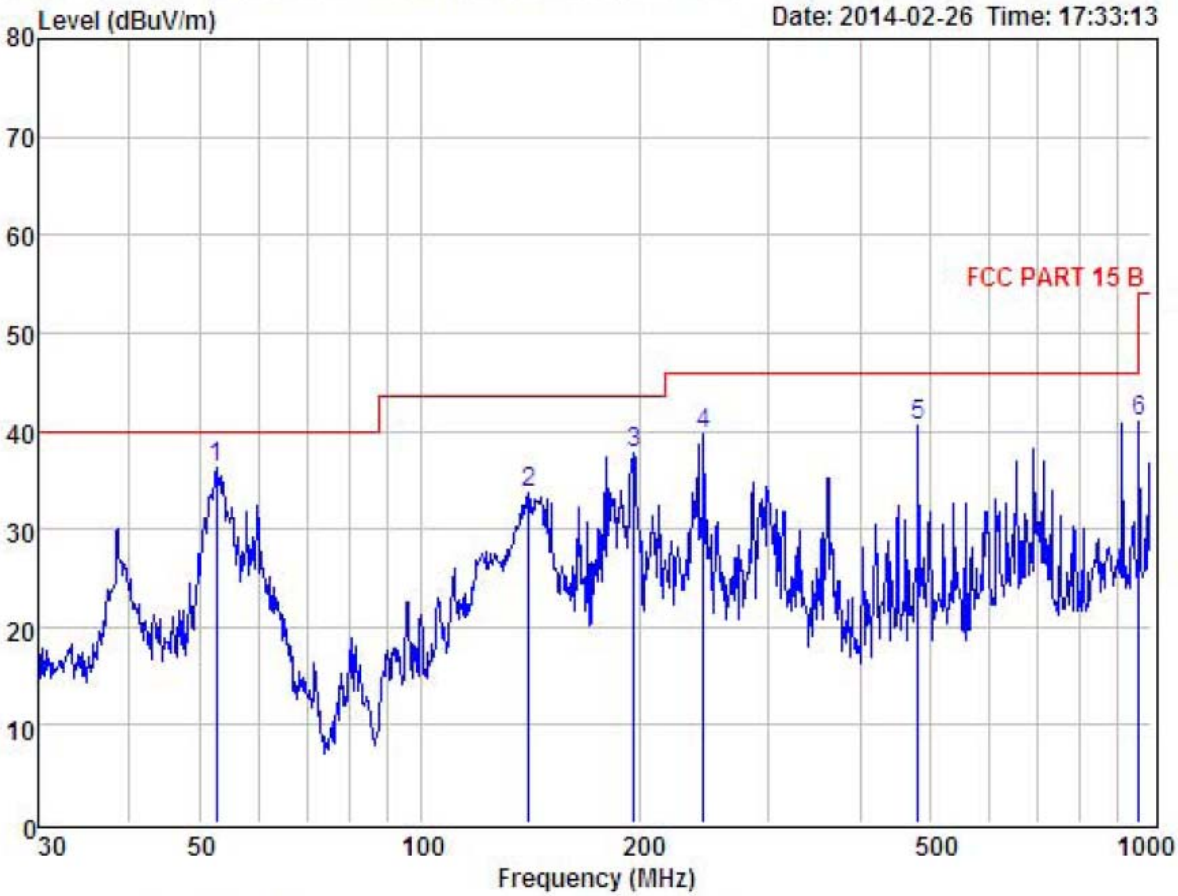

Item	Freq MHz	Read Level dBuV	Antenna Factor dB	Preamp Factor dB	Cable Loss dB	Level dBuV	Limit dBuV	Margin dBuV	Remark
1	52.58	48.72	13.38	26.16	0.24	36.18	40.00	-3.82	Peak
2	140.84	46.70	13.51	26.90	0.27	33.58	43.50	-9.92	Peak
3	195.82	54.06	10.13	26.96	0.48	37.71	43.50	-5.79	Peak
4	244.23	52.90	11.50	25.29	0.66	39.77	46.00	-6.23	Peak
5	480.53	47.92	16.28	24.57	0.81	40.44	46.00	-5.56	Peak
6	962.16	42.71	22.17	25.60	1.77	41.05	54.00	-12.95	Peak

Remark: Level = Read Level + Antenna Factor - Preamp Factor + Cable Loss

E.U.T :	MID	Model Name :	K786
Temperature :	21°C	Relative Humidity :	51 %
Test Voltage :	AC 120 V / 60Hz		
Antenna. Pol:	Horizontal		
Test Mode :	Mode 3: AC Charging with WiFi Link		

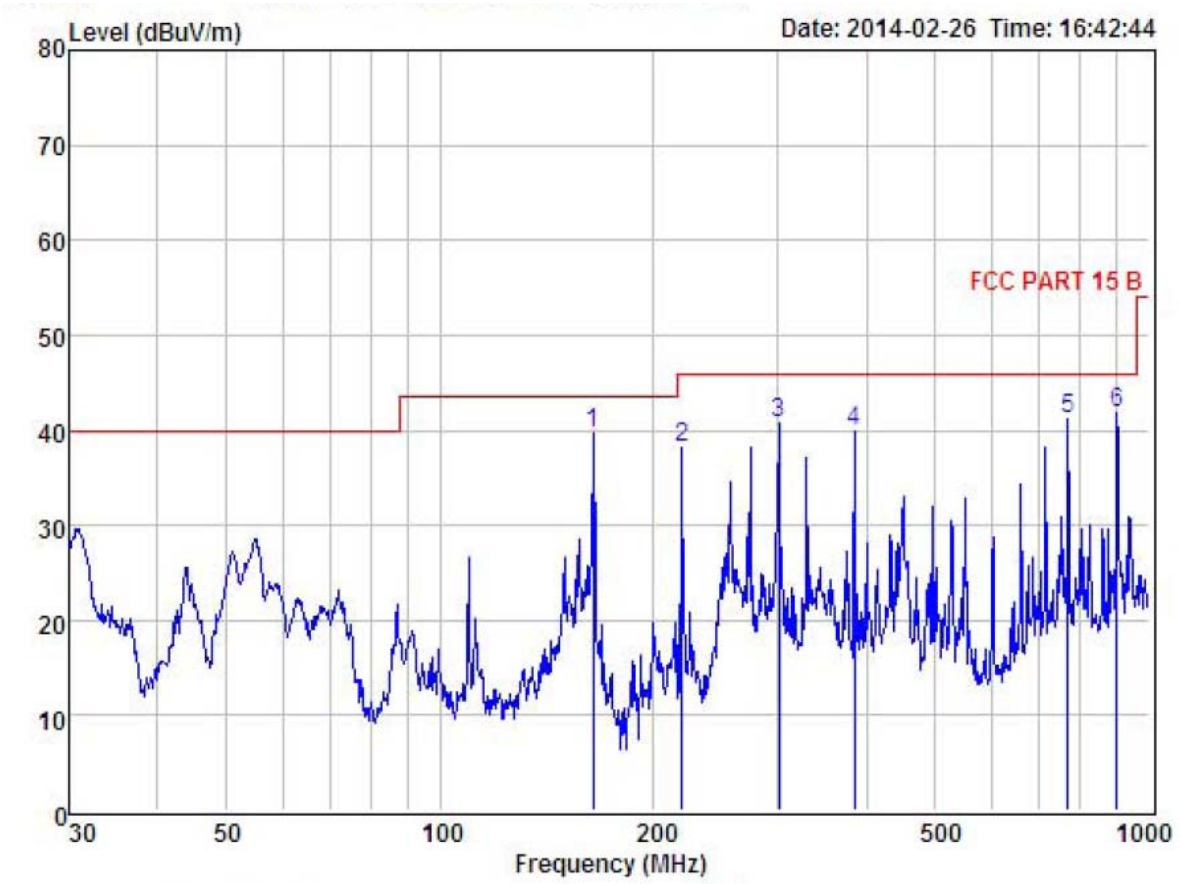

Item	Freq MHz	Read Level dBuV	Antenna Factor dB	Preamp Factor dB	Cable Loss dB	Level dBuV	Limit dBuV	Margin dBuV	Remark
1	164.33	52.47	13.76	26.91	0.45	39.77	43.50	-3.73	Peak
2	219.84	54.00	10.64	27.07	0.67	38.24	46.00	-7.76	Peak
3	300.37	51.41	12.85	24.19	0.64	40.71	46.00	-5.29	Peak
4	383.93	49.03	14.48	24.38	0.81	39.94	46.00	-6.06	Peak
5	768.75	45.13	20.47	25.68	1.30	41.22	46.00	-4.78	Peak
6	900.15	44.47	21.67	25.65	1.31	41.80	46.00	-4.20	Peak

Remark: Level = Read Level + Antenna Factor - Preamp Factor + Cable Loss

E.U.T :	MID	Model Name :	K786
Temperature :	21°C	Relative Humidity :	51 %
Test Voltage :	AC 120 V / 60Hz		
Antenna. Pol:	Vertical		
Test Mode :	Mode 3: AC Charging with WiFi Link		

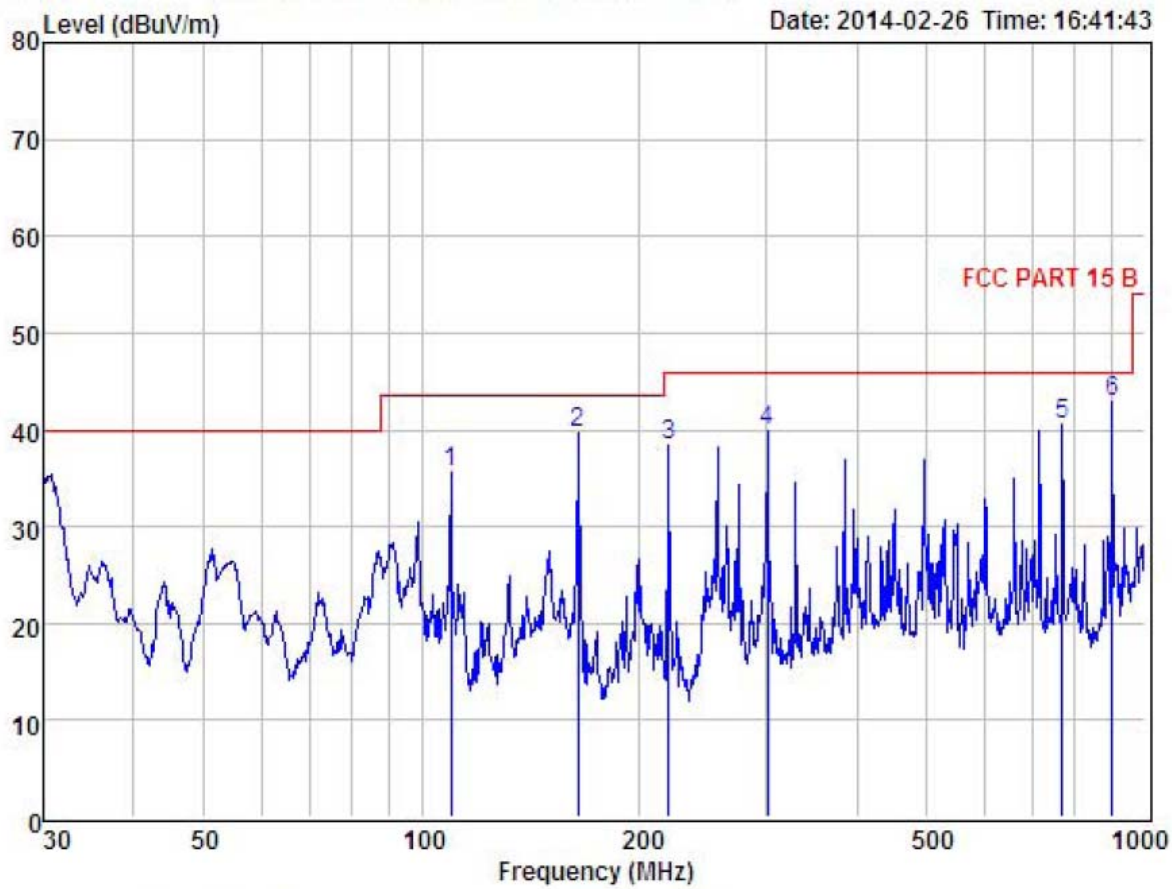

Item	Freq MHz	Read Level dBuV	Antenna Factor dB	Preamp Factor dB	Cable Loss dB	Level dBuV	Limit dBuV	Margin dBuV	Remark
1	109.80	51.03	11.13	26.86	0.38	35.68	43.50	-7.82	Peak
2	164.33	52.36	13.76	26.91	0.45	39.66	43.50	-3.84	Peak
3	219.84	54.22	10.64	27.07	0.67	38.46	46.00	-7.54	Peak
4	300.37	50.67	12.85	24.19	0.64	39.97	46.00	-6.03	Peak
5	768.75	44.46	20.47	25.68	1.30	40.55	46.00	-5.45	Peak
6	900.15	45.49	21.67	25.65	1.31	42.82	46.00	-3.18	Peak

Remark: Level = Read Level + Antenna Factor - Preamp Factor + Cable Loss

1 GHz~26.5GHz

E.U.T :	MID	Model Name :	K786
Temperature :	21°C	Relative Humidity :	51 %
Test Voltage :	AC 120 V / 60Hz		
Antenna. Pol:	Vertical		
Test Mode :	Mode 3: AC Charging with WiFi Link		

Freq. (MHz)	Ant.Pol. H/V	Emission Level (dBuV/m)		Limit3m (dBuV/m)		Margin(dB)	
		PK	AV	PK	AV	PK	AV
1732.500	V	48.69	41.33	74.00	54.00	25.31	12.67
1956.600	V	47.61	40.72	74.00	54.00	26.39	13.28
--	V	--	--	74.00	54.00	--	--
--	V	--	--	74.00	54.00	--	--
1732.500	H	45.78	39.80	74.00	54.00	28.22	14.20
1956.600	H	52.14	45.69	74.00	54.00	21.86	8.31
--	H	--	--	74.00	54.00	--	--
--	H	--	--	74.00	54.00	--	--