Dekolink WIRELESS Ltd.
16 Bazel St. Qiryat-Arieh Petah-Tikva, Israel, 49510
Tel- 972-3-9180-180 Fax-972-3-9180-190
e-mail: marketing@decolink.com web www.decolink.com

INSTALLATION and OPERATION INSTRUCTIONS

FOR
FiberLink®

BI-DIRECTIONAL AMPLIFIER WITH DIVERSITY

MW-FBDA-800AB-50W-DIV

TABLE OF CONTENTS

PARA No.	PARAGRAPH	PAGE No.
1.	OVERVIEW	3
2.	COMPONENT DESCRIPTION	5
2.1	DUPLEXER	5
2.2	UPLINK AMPLIFIER	5
2.3	35 WATT DOWNLINK POWER AMPLIFIER	5
2.4	Fiberoptic transceiver	5
2.5	RFIBER TRANSMITTER	7
2.6	MONITOR UNIT	7
2.7	DISTRIBUTION UNIT	10
2.8	POWER SUPPLY	10
3	ELECTRICAL SPECIFICATIONS	11
3.1	RF SPECIFICATIONS	11
3.2	FBDA ALARM SPECIFICATIONS	12
3.3	MECHANICAL SPECIFICATIONS	12
3.4	ENVIRONMENTAL CONDITIONS	12
4	RF EXPOSURE WARNING	13

LIST OF FIGURES

Fig No.	Fig. name	Page No.
1	FBDA RF BLOCK DIAGRAM	4
2	RFIBER FRONT PANEL	6
3	RFIBER REAR PANEL	6
4	MONITOR OUTLINE	8
5	FIBERLINK ALARM BLOCK DIAGRAM	9
6	FBDA SYSTEM BLOCK DIAGRAM	13
7	MECHANICAL LAYOUT	14
8	MECHANICAL OUTLINE	15

1. OVERVIEW:

The FBDA is an interface unit between optical signals carrying RF information, and RF antennas covering a defined user area. The system consists of uplink path and downlink path and an additional uplink path for diversity.

The uplink path receives RF signals from the Mobile antenna amplifies them and the Rfiber+ converts them to optical signals. These optical signals are sent to the BTS.

The downlink path receives optical signals from the BTS to the Rfiber+, converts them to RF signals and amplifies these signals using a high power amplifier. The Mobile antenna transmits these RF signals.

A duplexing filter separates the frequencies of uplink path from the downlink path enabling the use of the same antenna for receiving and transmitting. The FBDA provides about 46 dB RF gain in both directions.

Both optical signals for Uplink and Downlink are carried on a single fiber using WDM.

Downlink gain can be adjusted using a trim pot on the Rfiber+ front panel for proper output power.

Uplink gain can be adjusted by 16 dB continuous trim pot.

The downlink path uses a 50 Watt power amplifier while the uplink uses an AGC amplifier to drive the uplink F/O transmitter. The AGC is set to 0 dBm, which is the max power required by the F/O transmitter.

For diversity reasons there is an additional Uplink path consisting of Cavity band pass filter, AGC amplifier, and Fiber optic transmitter. The optical signal of this path is transferred via an additional fiber to the base station.

Dekolink WIRELESS Ltd.
16 Bazel St. Qiryat-Arieh Petah-Tikva, Israel, 49510
Tel- 972-3-9180-180 Fax-972-3-9180-190
e-mail: marketing@decolink.com web www.decolink.com

Fig. 1 : FBDA RF BLOCK DIAGRAM

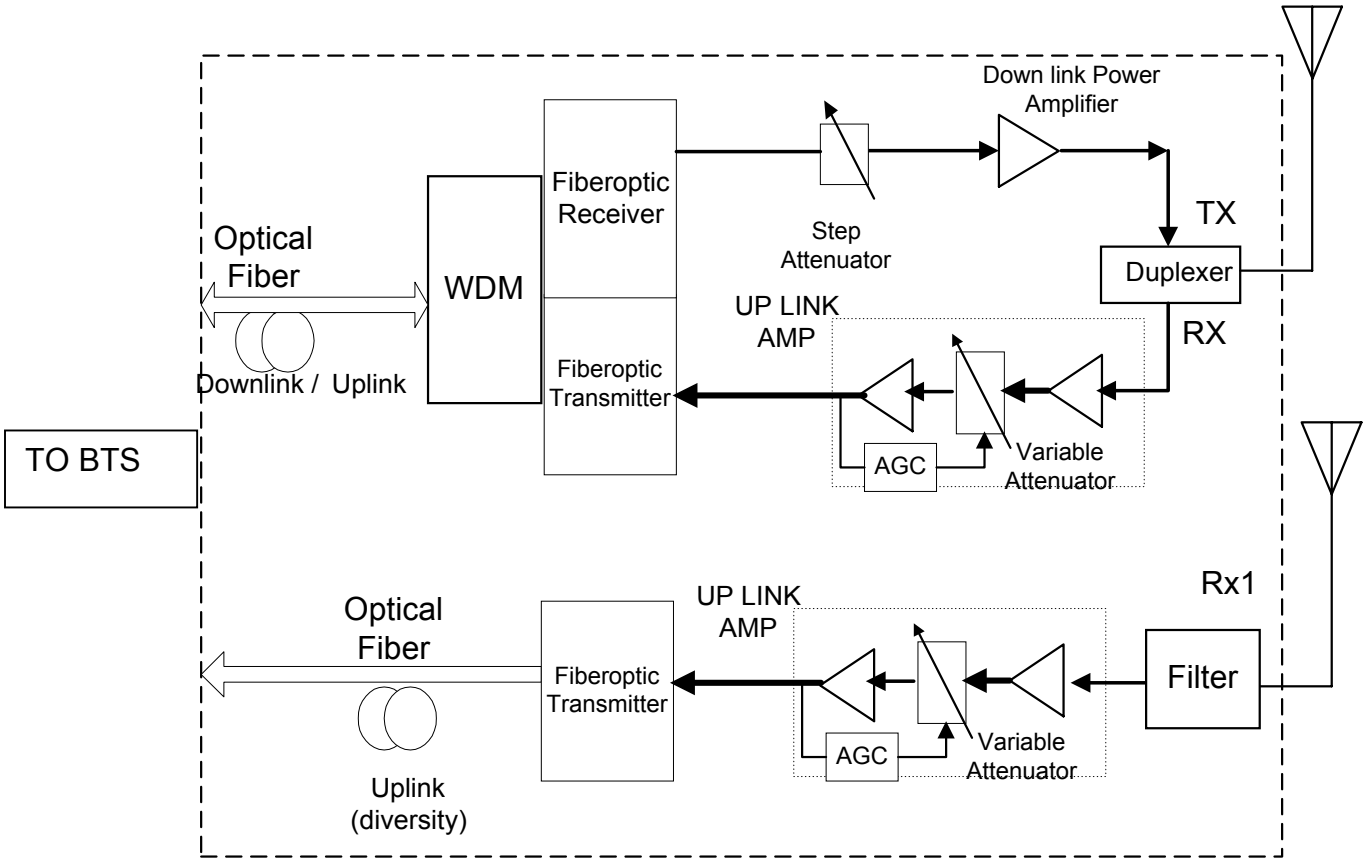

2. COMPONENTS DESCRIPTION:

2.1 DUPLEXER(x2)

The duplexer serves to frequency separate uplink signals from downlink signals. The duplexer has sharp out of band attenuation for better isolation between the receiving and transmitting paths and for better rejection of interfering signal in the air. In the Diversity path only the Rx part of the duplexer is used.

2.2 UPLINK AMPLIFIER(both Rx pathes)

The uplink amplifier is a low noise, 45dB gain unit. The amplifier contains AGC control circuitry. When a high power signal is received the automatic level control detects it and reduces the gain so that the output power of the amplifier is constant. The AGC function limits the signal at the Fiberoptic transmitter input when high power signals are received while keeping high gain when low power signals are received.

The **LED** on the amplifier illuminates when the power output of the amplifier exceeds the AGC power set limit (when the AGC is either ON or OFF).

The **Switch** on the RF amplifier enables the AGC function. If the AGC is disabled then the amplifier gives maximum gain for any input.

The AGC level is factory set to 0 dBm and AGC is set to ON, to prevent high power damage at the Rfiber+ input.

2.3 50 WATT DOWNLINK POWER AMPLIFIER

This is the downlink power amplifier. It can drive 40 dBm composite power to the MOBILE antenna. A thermostat attatched to this amplifier turns on TEMP alarm when the temperature exceeds 80° C.

2.4 Fiberoptic to RF transceiver

The RFiber+™ product is a transceiver that includes a transmitter and receiver unit. The transmitter converts the RF signals into light wave signals, which are then sent over fiberoptic cables. The receiver converts light wave signals back to RF

The model in use is a wide band product in the 0.08-1 GHz frequency range and it includes a WDM module to enable use of one fiber for Tx and Rx signals.

The RFiber+™ main features are:

1. Protocol transparency; i.e. any standard can be faithfully transmitted.
2. An optional serial port (RS232) is installed into each unit. This port allows data communication over the same fiberoptic cable.
3. Max. input RF power for normal operation – 0dBm.
4. Manual Gain Control is standard in receiver to compensate for optical loss across the fiber.

The following drawings show sample front and rear panels of the RFiber+™ unit (for WDM model there is only one optical in/out port).

Fig. 2 : - RFiber+™ Front Panel

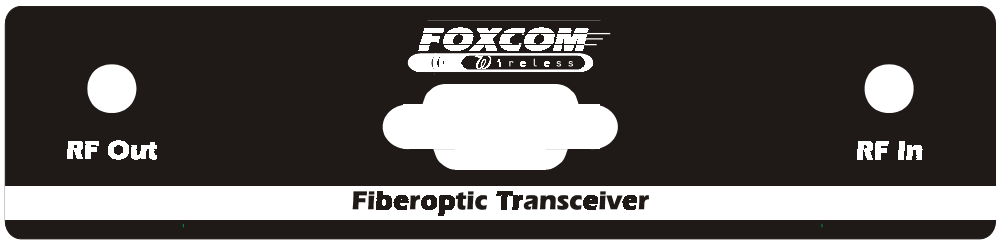

Fig. 3 : - RFiber+™ Rear Panel

On the Front Panel of the RFiber+™ unit (Fig 2.) are three LEDs. The LEDs should be on when the unit is in use. The following table describes the LEDs.

LED Name	LED Function
LD	When ON - Indicates optical output power is within product specifications.
PD	When ON - Indicates optical power received is above 0.1mW.
DC	Indicates when the power is on.

The “Gain” trimmer on the front panel is used to adjust signal level at the RF out of the Rfiber+, especialy for optical loss compensation of the optical fiber.

2.5 Rfiber transmitter.

This is a fiber optic transmitter for Diversity path. Practically it is the transmit part of Rfiber+ in a separate box.

2.6 MONITOR UNIT

The FBDA monitor performs the following functions:

a) Monitors the DC supply voltage of the FBDA. The fault LED illuminates when the voltage is beyond the specified limits.

b) Monitors the current to each active element and the internal fan. If the current is below or above the specified limits then a LED illuminates.

c) Monitor the optical receive signal using alarm output of the optical transceiver.

d) Monitors the Thermostat for high temperature alarm.

e) Provides automatic alarm function. Whenever any fault occurs or when the power supply voltage is under it’s limit, the unit sends summarized alarm signal to the base station via the Fiberoptic transmitter data port.

e) Provides self test for the alarm functions. The pushbutton switch on the Monitor unit turns on all the alarm LEDs and initiates the summarized alarm.

Fig 4.: MONITOR OUTLINE

Fault list:

P.S. : power supply fault

FAN : Fan

PWR. AMP : Downlink 50W AMP

DIV A : Diversity PATH

RFIBR DC : Rfibr dc current

UPLINK A .: Uplink amp

OPT. ALR .: Optical link alarm

HI. TEMP .: High temperature alarm

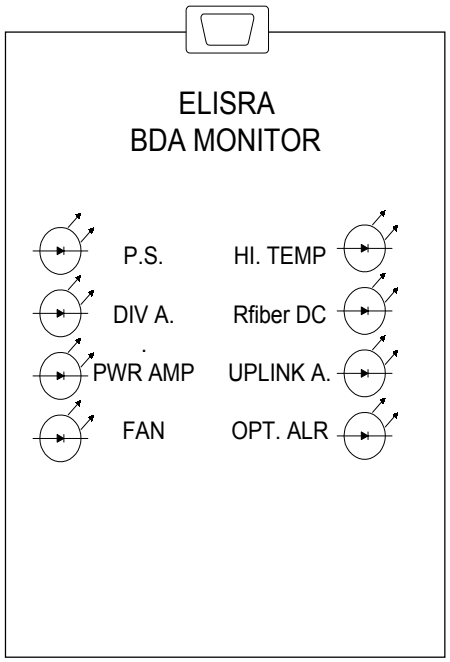

Fig 5.: FIBER LINK ALARMS BLOCK DIAGRAM

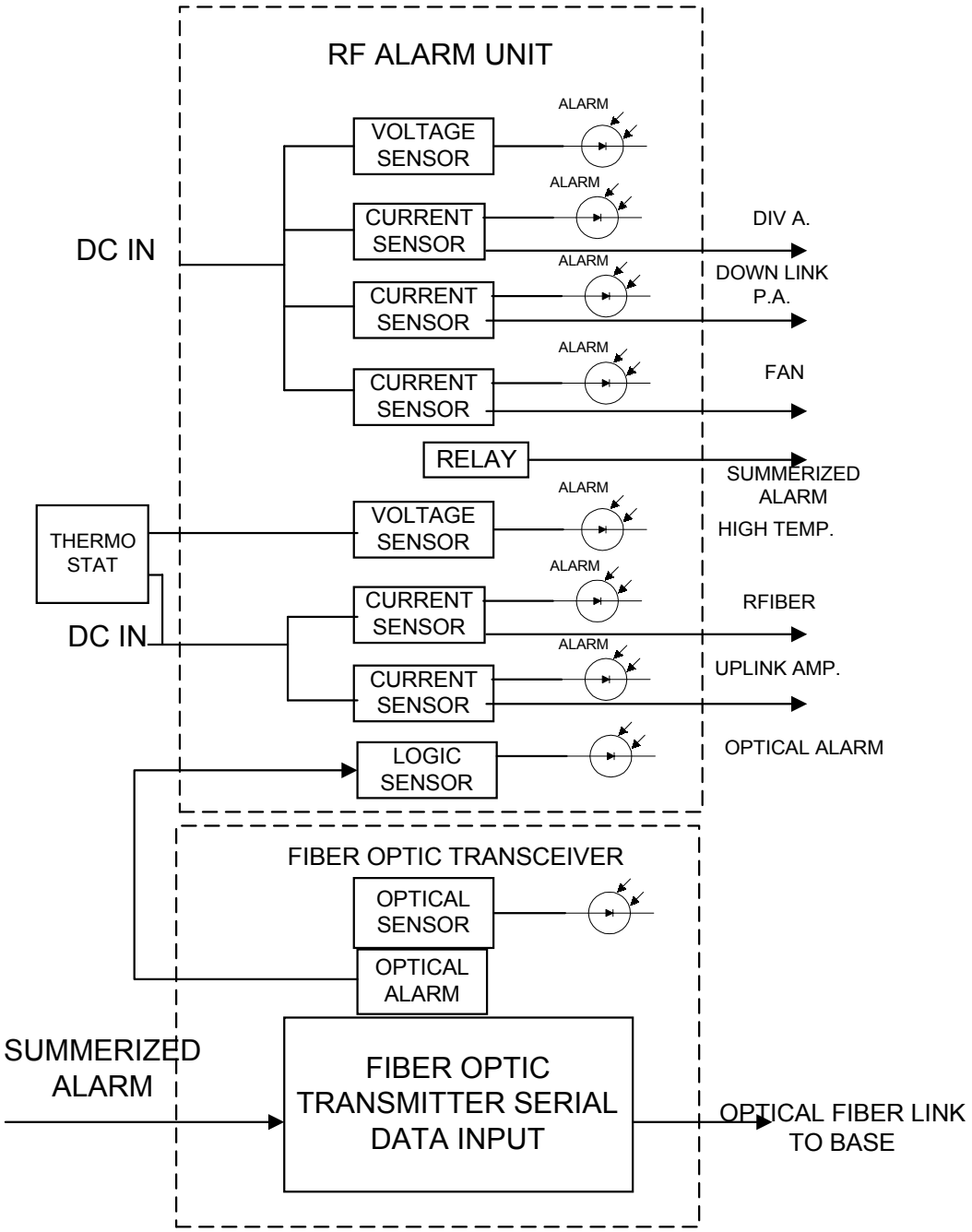

2.7 POWER DISTRIBUTION UNIT

The power distribution unit acts as DC connection panel. It receives power from the power supply and distributes it to the FBDA units.

It contains the following functions:

- Fuse and for the DC power coming from the AC power supply.
- Current sampler for the high power 50 Watt amplifier.
- distribution strip for various units.

2.8 POWER SUPPLYS

This is a high efficiency switching power supply providing +28 VDC for the 50W amplifier, and a +13.5 VDC for other units.

3 . SPECIFICATIONS:

3.1 RF SPECIFICATIONS

	Uplink (RX, Rx1)	Downlink (TX)
Frequency Range	824-849 MHz	869-894 MHz
Passband Gain @ min attenuation	46 dB Nominal	
Passband Ripple	± 1.0 dB typical	
Noise Figure @+25°C (optical loss less than 3 dB)	6.0 dB max @ max gain	N.A.
Manual Attenuation Range	0 to 16 dB continuous	30 dB in 2 db steps
Down-Link Output Composite Power	----------	+40 dBm typ.
Down-Link 3rd Order Intermodulation Products @two tones +37 dBm each at Output	----------	50 dBc min
Up-Link AGC Range	30 dB typ	----------
Power Output at AGC Setting (Factory Set)	0 ± 1 dBm	----------
Up-Link 3rd Order Intermodulation Products @two tones -3 dBm each at F/O Transmitter Input	55 dBc typical	----------
Impedance Level	50 Ohms	
VSWR	1.5 : 1 max	

3.2 FBDA ALARM SPECIFICATIONS

Remote Fault Indication (Summarized alarm)	Relay Contact open for any fault. Relay closed for no fault. Alarm is sent on the serial data link of the FO transmitter
Fault List :	Power Supply Over-voltage or Under-voltage
	Uplink Amplifier Over Current or Under Current
	Downlink Power Amplifier Over Current or Under Current
	FO Transceiver Over Current or Under Current
	FO Receiver Power fall (Bad Optical Connection)
	Fan Over Current or Under Current
	High temperature
Electrical Fault Indication LED	Illuminated LED on Monitor Box for each Electrical Fault
Fiber Optic Connection Fault Indication LED	Illuminated LED on FO Transceiver when Optical Connection is performing Correctly. LED is OFF when FO Receiver Power falls.

3.3 MECHANICAL SPECIFICATIONS:

Size	: 400 x 400 x 300 mm approx.
RF Connectors	: N-type Female
Weight	: 30 kg. Approx.
Enclosure Type	: Weather proof Enclosure for Wall Mounted Installation(IP66).
Power Supply	: 100 to 220 VAC / 2A

3.4 ENVIRONMENTAL CONDITIONS:

6.1 Operating temperature	: - 20°C to + 50°C
6.2 Storage temperature	: - 30°C to + 70°C

4. RF EXPOSURE WARNING

In order to satisfy the FCC RF exposure requirements, you must ensure that the installation complies with the following:

The antenna is connected via cable that has typical 1~10 dB attenuation (depends on the length of the cable) to the FBDA MOBILE port. In most cases, indoor or outdoor, the antenna is omnidirectional (isotropic), or wide beam, with 0 to 3 dBi typical gain , VSWR: better than 1.5:1 , Impedance: 50 ohm. The antenna must be installed to provide a minimum separation distance of 0.5 m (50 cm) from persons within the area. For indoor applications the output power can be distributed to several antennas. When 4 antennas (or more) are used, the indoor antenna must be installed to provide a minimum separation distance of 0.2 m (20 cm) from persons within the area.

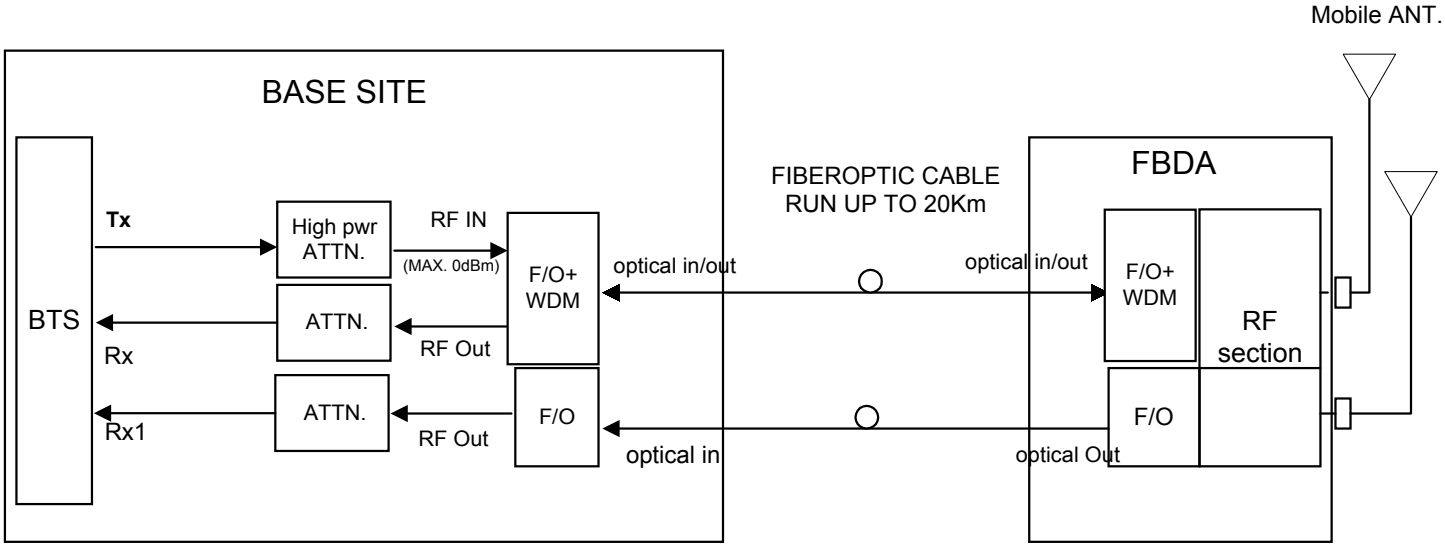

Fig. 6 : FBDA SYSTEM BLOCK DIAGRAM

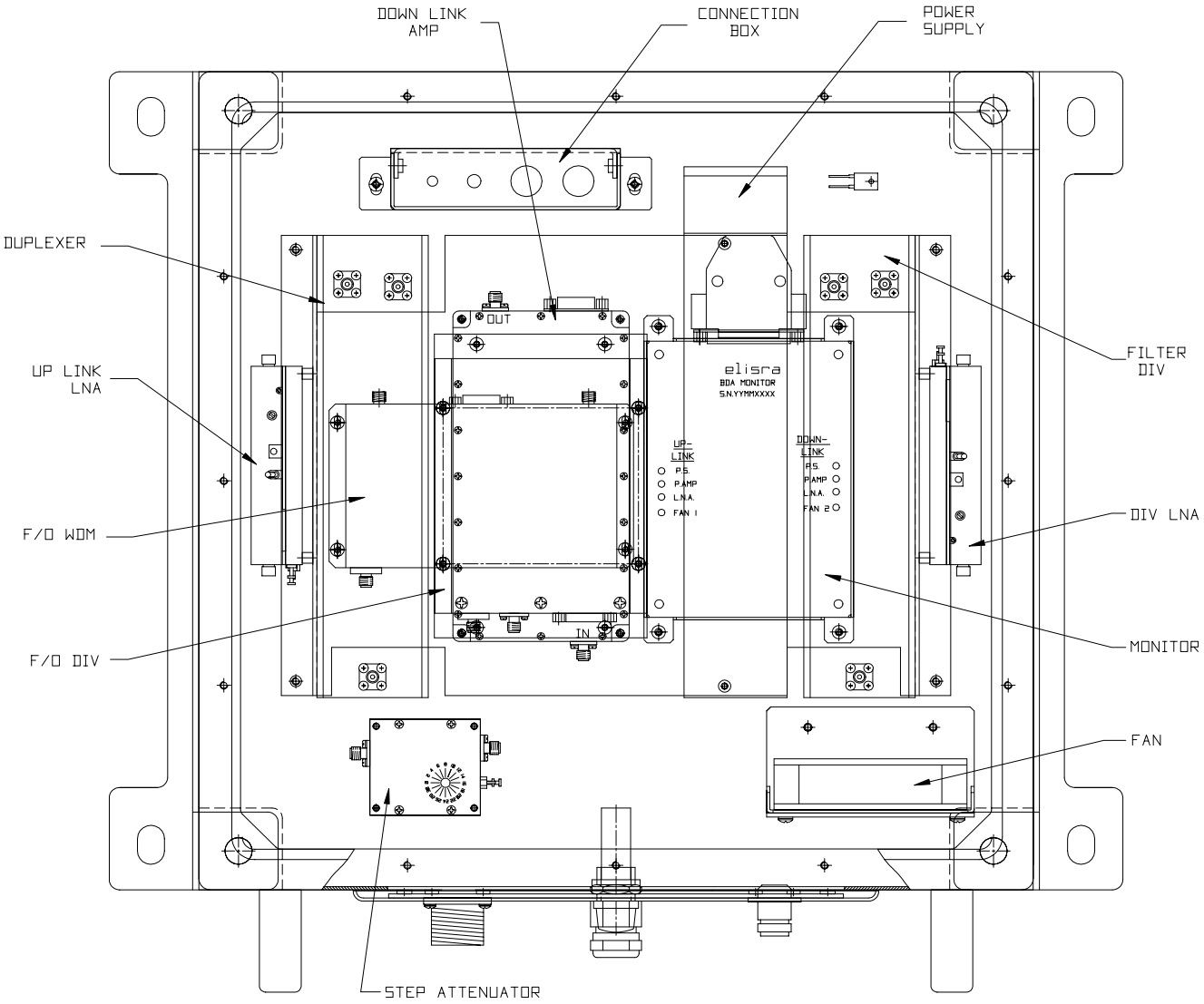

Fig. 7:MECHANICAL LAYOUT

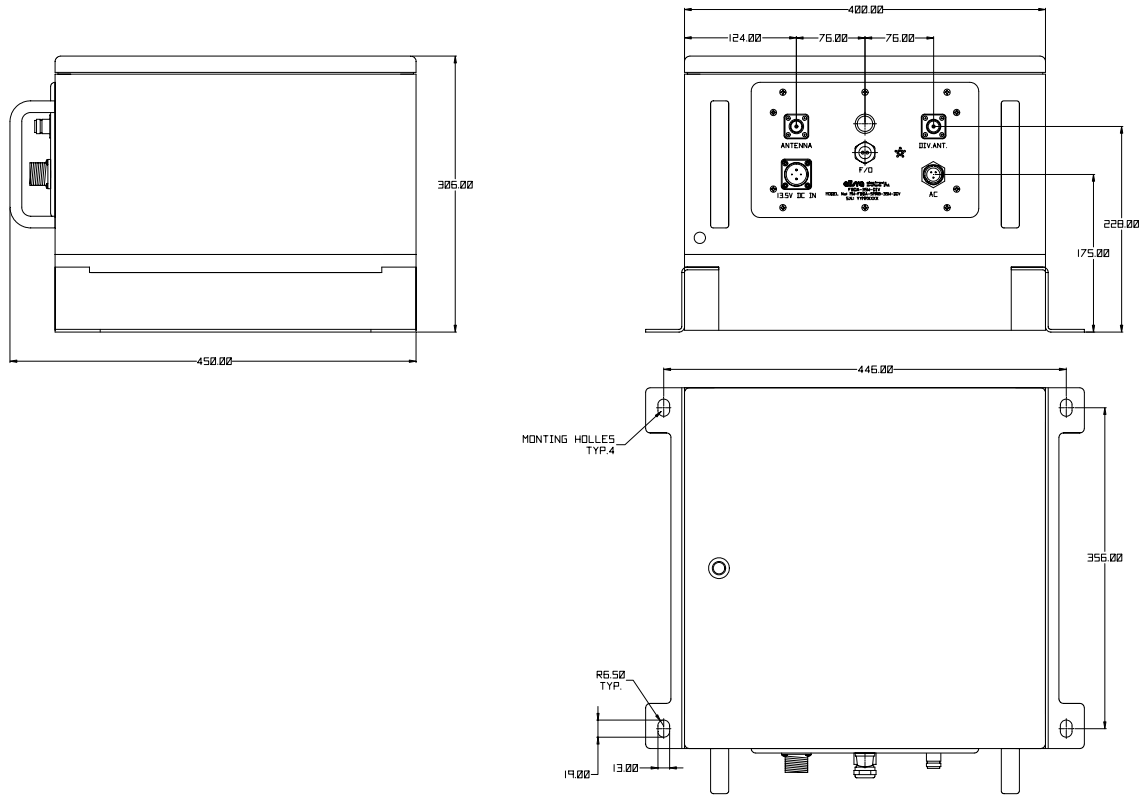

Fig. 8: MECHANICAL OUTLINE