Everon™ 6000 v1.0

User Manual

CORNING

Corning Optical Communications

www.corning.com

CORNING

Everon™ 6000 v1.0

User Manual

Preface Material

About this Manual

This manual describes how to install, use, configure and manage Corning's Everon™ 6000 1.0 platform. It includes a description of the system end-to-end first time and on-going configuration, management and maintenance.

Intended Users and Scope

This manual is intended for Corning system installers, technicians and users. It is assumed that the user is familiar with the system and its units, and understands the basic functionality of the system.

Contacting Technical Support HelpDesk

Corning technical support contact information:

email: cmatsg@corning.com

Tel: [800] 787 1266

Legal Notice

Copyright

Copyright © 2021 Corning., All Rights Reserved

Disclaimer

This document contains proprietary information of Corning and may not be reproduced in any form without the prior written consent of Corning.

No part of this document may be reproduced, translated, stored in a retrieval system or transmitted in any form and by any means, electronic, mechanical, photographic, photocopying, recording, or otherwise, without the prior written permission of Corning.

Information provided in this document is subject to change without notice and does not represent a commitment on the part of Corning.

All products and company names are trademarks or registered trademarks of their respective holders.

Software License Terms

The software and the system design is the property of Corning.

It is supplied to the user to be used solely for its stated purposes. It is strictly forbidden to make copies of the software or transfer it in any way, for any purpose, to any third party.

The license to use the software is granted to the user only for the specific system it is installed on by Corning, or its authorized distributors and representatives.

The purchaser shall not modify the software in any way.

It is strictly forbidden to use this product for any purpose other than originally designated for or stipulated by Corning.

Conventions

Important information is highlighted in a frame, as explained below:

Warning: Actions requiring special attention to avoid serious bodily injury;

For example, working with high voltage components

Caution: Actions requiring special attention, to avoid possible damage to equipment

Note: Hints and recommendations for working efficiently

Warranties

Hardware Warranty

Corning Optical Communications Wireless, Inc. ("Corning")warrants to the original purchaser ("Customer") that for the duration of the warranty period, one (1) year, commencing on the date of shipment of the Hardware, unless otherwise agreed in writing by Corning (the "Hardware Warranty Period"), the Hardware furnished by Corning shall be free in all material respects from defects in material and workmanship, and shall conform to the applicable portions of the Specifications, as defined below (the "Hardware Warranty"). If notified by Customer of any such defects in material or workmanship or nonconformity with applicable portions of the Specifications within the Hardware Warranty Period, Corning shall promptly, at its own election and expense, repair or replace any such Hardware proven to be defective under the terms of this Hardware Warranty. Such repair or replacement shall be Customer's sole remedy and Corning's sole obligation in the event this Hardware Warranty is invoked. If any components comprising a part of the Hardware are replaced or repaired during the Hardware Warranty Period, the Hardware Warranty Period for such repaired or replaced components shall extend to the longer of (i) the balance of the Hardware Warranty Period or (ii) three (3) months from the date of repair or replacement. For purposes of this Warranty, "Specifications" shall mean the specifications and performance standards of the Products as set forth in documents published by Corning and delivered to Customer which contain technical specifications or performance standards for the Products.

If Customer invokes this Hardware Warranty, it shall notify Corning promptly of the claimed defect. Customer will allow Corning to inspect the Hardware at Customer's location, or to return the Hardware to Corning's closest repair facility. For Hardware returned to Corning's repair facility, Customer shall be responsible for payment of all transportation and freight costs (including insurance) to Corning's repair facility, and Corning shall be responsible for all transportation and freight costs (including insurance) incurred in connection with the shipment of such Hardware to other repair facilities of Corning and/or its return to Customer.

Notwithstanding the foregoing, in no event will Corning be liable for damage to Products resulting from improper handling during or after shipment, misuse, neglect, improper installation, operation or repair (other than by authorized Corning personnel), alteration, accident, or for any other cause not attributable to defects in materials or workmanship on the part of Corning. Corning shall not reimburse or make any allowance to Customer for any labor charges incurred by Customer for replacement or repair of any goods unless such charges are authorized in advance in writing by Corning.

Software Warranty

Corning warrants to the original purchaser ("Customer") that for the duration of the warranty period, one (1) year, commencing on the date of shipment of the Software, unless otherwise agreed in writing by Corning (the "Software Warranty Period"), the Software shall conform with, and perform the functions set forth in the Specifications, and shall be free from defects in material or workmanship (the "Software Warranty"). In the event the Software is proven to be defective under the terms of this Software Warranty, Corning shall correct such defects or failure and ensure that the Software conforms with, and performs the functions set forth in, the Specifications. Customer will allow Corning to inspect the Software at Customer's location or to return it to Corning's closest repair facility. Notwithstanding the foregoing, Corning shall have no obligation under the Software Warranty if the Software is modified or used with hardware or software not supplied or approved by Corning or if the Software is subject to abuse, improper installation or application, accident, electrical or environmental over-stress, negligence in use, storage, transportation or handling. Third-party software distributed with the Software may carry certain warranties which, to the maximum extent allowed by law, Corning hereby assigns, transfers and otherwise conveys to Customer, provided, however, that Corning itself provides no warranty of any kind, express, implied, statutory or otherwise, for any third-party software provided hereunder.

Corning does not warrant any hardware, software or services not provided by Corning.

This warranty is the only warranty made by corning and is in lieu of all other warranties, express or implied including, but not limited to, the implied warranties of merchantability and fitness for a particular purpose. Corning shall not be liable for any other damage including, but not limited to, indirect, special or consequential damages arising out of or in connection with furnishing of goods, parts and service hereunder, or the performance, use of, or inability to use the goods, parts and service. Corning sales agents or representatives are not authorized to make commitments on warranty returns.

Returns

above warranty, the following procedure shall be followed:

1. Return authorization is to be received from Corning prior to returning any unit. Advise Corning of the model, serial number, and discrepancy. The unit may then be forwarded to Corning, transportation prepaid. Devices returned collect or without authorization may not be accepted.
2. Prior to repair, Corning will advise the customer of our test results and any charges for repairing customer-caused problems or out-of-warranty conditions etc.
3. Repaired products are warranted for the balance of the original warranty period, or at least 90 days from date of shipment.

Limitations of Liabilities

Corning's liability on any claim, of any kind, including
negligence for any loss or damage arising from, connected with, or resulting from the purchase order, contract, quotation, or from the performance or breach thereof, or from the design, manufacture, sale, delivery, installation, inspection, operation or use of any equipment covered by or furnished under this contact, shall in no case exceed the purchase price of the device which gives rise to the claim.
Except as expressly provided herein, Corning makes no warranty, expressed or implied, with respect to any goods, parts and services provided in connection with this agreement including, but not limited to, the implied warranties of merchantability and fitness for a particular purpose.
Corning shall not be liable for any other damage including, but not limited to, indirect, special or consequential damages arising out of or in connection with furnishing of goods, parts and service hereunder, or the performance, use of, or inability to use the goods, parts and service.

Reporting Defects

The units were inspected before shipment and found to be free of mechanical and electrical defects. Examine the units for any damage that may have been caused in transit. If damage is discovered, file a claim with the freight carrier immediately. Notify Corning as soon as possible in writing.
Note: Keep all packing material until you have completed the inspection.

Warnings and Admonishments

There may be situations, particularly for workplace environments near high-powered RF sources, where recommended limits for safe exposure of human beings to RF energy could be exceeded. In such cases, restrictive measures or actions may be necessary to ensure the safe use of RF energy.
The equipment has been designed and constructed to prevent, as far as reasonably, practicable danger. Any work activity on or near equipment involving installation, operation or maintenance must be, as far as reasonably, free from danger.
Where there is a risk of damage to electrical systems involving adverse weather, extreme temperatures, wet, corrosive or dirty conditions, flammable or explosive atmospheres, the system must be suitably installed to prevent danger.
Equipment provided for the purpose of protecting individuals from electrical risk must be suitable for the purpose and properly maintained and used. This covers a range of activities including lifting, lowering, pushing, pulling, carrying, moving, holding or restraining an object, animal or person from the equipment. It also covers activities that require the use of force or effort, such as pulling a lever, or operating power tools.
Where some of the abovementioned activities are required, the equipment must be handled with care to avoid being damaged.
Observe standard precautions for handling ESD-sensitive devices. Assume that all solid-state electronic devices are ESD-sensitive. Ensure the use of a grounded wrist strap or equivalent while working with ESD-sensitive devices. Transport, store, and handle ESD-sensitive devices in static-safe environments.

⚠WARNINGS!

According to the device type:

- **For DLRU-678, dHRU-dHPAM-7, dHRU-dHPAM-85:**
  WARNING: THIS IS A 90.219 CLASS B DEVICE. This is NOT a CONSUMER device. It is designed for installation by FCC LICENSEES and QUALIFIE INSTALLERS. You MUST have an FCC LICENSE or express consent of an FCC License to operate this device. You MUST register Part 90 Class B signal booster (as defined in 47 CFR 90.219) online at www.fcc.gov/signal-boosters/registration. Unauthorized use may result in a significant forfeiture penalties, including penalties in excess of $100,000 for each continuing violation.
- **For DLRU-1719232, dHRU-dHPAM-6, dHRU-dHPAM-17, dHRU-dHPAM-19, dHRU-dHPAM-23, dHRU-dHPAM-25:**
  WARNING: This is NOT a CONSUMER device. It is designed for installation by FCC LICENSEES and QUALIFIED INSTALLERS. You MUST have an FCC LICENSE or express consent of an FCC License to operate this device. Unauthorized use may result in a significant forfeiture penalties, including penalties in excess of $100,000 for each continuing violation.

For all devices:
Waning info: Preclude indications that the device supports home/personal use

RF Safety

To comply with FCC RF exposure compliance requirement, adhere to the following warnings:
Warning! Antennas used for this product must be fixed mounted on indoor permanent structures, providing a separation distance of at least 120 and above cm from all persons during normal operation.
Warning! Each individual antenna used for this transmitter must be installed to provide a minimum separation distance of 380 cm or more from all persons and must not be co-located with any other antenna for meeting RF exposure requirements.
Warning! Antenna gain should not exceed 10 dBi.
Warning! The design of the antenna installation needs to be implemented in such a way so as to ensure RF radiation safety levels and non-environmental pollution during operation.
Compliance with RF Safety Requirements:
CAUTION! Use of controls, adjustments or performance of procedures other than those specified herein may result in hazardous radiation exposure.
Power Requirements for DC Inputs
Warning! Only use a special DC supply cable with connector
Warning! Always keep DC IN connectors connected during the product operation
Warning! Disconnect all power from the equipment by means of an external circuit breaker before connecting or disconnecting the DC IN connectors.

- **RF Parameters**

Frequency Range Name	Uplink	Downlink
600-band 71	663-698 MHz	617-652 MHz
700L (Lower Band)- band 12	698-716 MHz	728-746 MHz
700U (Upper Band)-band 13	776-787 MHz	746-757 MHz
FirstNet (700)-band 14	788-798 MHz	758-768 MHz
800/850 -band 26	817-849 MHz	862-894 MHz
1900 (PCS)-band 25	1850-1915 MHz	1930-1995 MHz
EAWS-band 66	1710-1780 MHz	2110-2200 MHz
WCS -band 30	2305-2315 MHz	2350-2360 MHz
2500 -band 41	2496-2690 MHz (TDD)	

Compliance with RF Safety Requirements:

Warning! Only use a special DC supply cable with connector
Warning! Always keep DC IN connectors connected during the product operation

Company Certification

Corning products have met the approvals of the following certifying organizations:

Certification

Certification No.: 88061; Certification Issue Date: 26/06/2019
Initial Certification Date: 29/04/2007; Certification Expiry Date: 24/06/2022

CERTIFICATE

This is to certify that the Quality Management System of

CORNING OPTICAL COMMUNICATIONS WIRELESS LTD.

Golan Building, Hagolan street & Hanegev street, Airport City, Israel

Has been assessed and complies with the requirements of :

ISO 9001:2015

This Certificate is Applicable to

Design and Development of electronic and fiber optical tellecommunication and special purpose equipment.

Certificate No.: 88061
Initial Certification Date: 29/04/2007
Certificate Issue Date: 25/06/2019
Certification Expiry Date: 24/06/2022

SII-QCD assumes no liability to any party other than the client, and then only in accordance with the agreed upon Certification Agreement.
This certificate's validity is subject to the organization maintaining their system in accordance with SII-QCD requirements for system certification. The continued validity may be verified via scanning the code with a smartphone, or via website www.sii.org.il. This certificate remains the property of SII-QCD.

R.N 512604406

Avital Weinberg
Director, Quality & Certification Division

Page 1 of 1

Our Vision: To Enhance Both Global Competitiveness of our Services, with our Uncompromised Quality and Integrity

THE INTERNATIONAL CERTIFICATION NETWORK

CERTIFICATE

THE STANDARDS INSTITUTION OF ISRAEL

has issued an IQNet recognized certificate that the organization:

CORNING OPTICAL COMMUNICATIONS WIRELESS LTD.

Golan Building, Hagolan street & Hanegev street, Airport City, Israel

Has implemented and maintains a Quality Management System

For the following scope:

Design and Development of electronic and fiber optical tellecommunication and special purpose equipment.

which fulfils the requirement of the following standard:

ISO 9001:2015

Issued on:	25/06/2019
Date of initial approval:	29/04/2007
Date of expiration:	24/06/2022

This attestation is directly linked to the IQNet Partner's original certificate and shall not be used as a stand-alone document

Registration number: IL - 88061

Alex Stoichitoiu
President of IQNet

Avital Weinberg
Director, Quality & Certification Division

IQNet Partners*:
AENOR *Spain* AFNOR Certification *France* APCER *Portugal* CCC *Cyprus* CISQ *Italy*
CQC *China* CQM *China* CQS *Czech Republic* Cro Cert *Croatia* DQS Holding GmbH *Germany* FCAV *Brazil*
FONDONORMA *Venezuela* ICONTEC *Colombia* Inspecta Sertifiointi Oy *Finland* INTECO *Costa Rica*
IRAM *Argentina* JQA *Japan* KFQ *Korea* MIRTEC *Greece* MSZT *Hungary* Nemko AS *Norway* NSAI *Ireland*
NYCE-SIGE México PCBC *Poland* Quality Austria *Austria* RR *Russia* SII *Israel* SIQ *Slovenia*
SIRIM QAS International *Malaysia* SQS *Switzerland* SRAC *Romania* TEST St Petersburg *Russia* TSE *Turkey* YUQS *Serbia*
IQNet is represented in the USA by: AFNOR Certification, CISQ, DQS Holding GmbH and NSAI Inc.

* The list of IQNet partners is valid at the time of issue of this certificate. Updated information is available under www.iqnet-certification.com

www.sii.org.il

Licensee Contact Information

Industrial Boosters may only be used by FCC licensees or those given express (individualized) consent of license. Corning Optical Communications Wireless certifies all of the VARs listed as licensed installers for Corning. For the list of licensed VARs, please contact the Technical Support Team at:
onesupport@corning.com or + (1) 833 4CORNING (833-426-7646)

About This Manual

This user manual provides all the information necessary to perform the Corning® Everon™ 6000 solutions management connections and to configure and manage all of the system elements. It also provides a detailed description of all of the management and configuration options and features for software v1.4.

Revision History

Revision	Date	Created by	Reviewed by	Changes
0.1	Mar 2021	Yoni Henya Aloomit Godfarb Gila Shmueli	Moti Shalev	First issue

Table of Contents

1. Introduction 15
1.1 Key Features and Capabilities 15
1.2 Terminology, Acronyms, and Abbreviations 16
1.3 Applicable Documents 19
1.4 Everon™ 6000 1.0 Architecture Overview 20
1.4.1 External Interfaces and Use Cases - Example 20
1.4.2 Internal sub-units 23
2. System Installation 26
2.1 Head End Units – Architecture Examples 27
2.2 Integrated Headend Unit (IHU) Installation 29
2.2.1 Verify Box Contents 30
2.2.2 IHU Interfaces and Slots 33
2.2.3 Mount the Chassis in a Rack 34
2.2.4 Install the Modules in the Chassis 35
2.2.5 Connect the Cables 36
2.2.6 Power ON 40
2.2.7 Verify NORNAL Operation 41
2.3 Head End Unit (HEU) Installation 42
2.3.1 Verify Box Contents 43
2.3.2 Mount the Chassis 46
2.3.3 Install the Modules in the Chassis 47
2.3.4 Connect the Cables 48
2.3.5 Power ON 50
2.3.6 Verify NORNAL Operation 51
2.4 Additional stack and DRU connections 52
2.5 DRU Installation 53
2.5.1 Verify box contents 53
2.5.2 DRU Interfaces 54
2.5.3 DRU Dimensions [mm] 55
2.5.5 Mount the DRU in the 19’’ Rack 56
2.5.6 Connect the Cables 56
2.5.7 Verify Normal Operation 58
2.6 LRU Installation 60
2.6.1 Verify box Contents 60

2.6.2 LRU Dimensions [mm] 62
2.6.3 LRU Interfaces 63
2.6.4 Combiner Interfaces 64
2.6.5 Fully connected system diagram 65
2.6.6 Connect under-lid cables 66
2.6.7 Mount the LRU 68
2.6.8 Connect the rest of the Cables 70
2.6.9 Combiner cables 72
2.6.10 Verify normal operation 74
2.7 MRU (Digital Medium-power Remote Unit) Installation 75
2.7.1 Verify Box Contents 75
2.7.2 MRU Interfaces 79
2.7.3 Mount chassis in 19-in Rack 80
2.7.4 Wall Mount 81
2.7.5 Ground MRU Chassis 83
2.7.6 Connect Fiber SFP+ 84
2.7.7 Connect Antenna 85
2.7.8 External RF Source (3.5 GHz) 85
2.7.9 Connect Power & POWER UP 86
2.7.10 Verify Normal Operation 88
2.8 HRU Installation 90
2.8.1 Verify Box Contents 91
2.8.2 dHRU Interfaces, Connections, Dimensions 93
2.8.3 Installation steps Overview 99
3. GUI – General Description 107
3.1 Screen Layout 107
3.2 Main Menu Options 108
3.3 Default Network Settings 109
3.4 Supported Access Options 109
4. Session Access and first time settings 111
4.1 Open a Local Session 111
4.2 Remote Management 117
5. Commissioning 124
5.1 Create new user operators 124
5.2 Set system parameters through Main Menu Config Option 126

5.2.1 Set Site config – auto set 126
5.2.2 Power Sharing 130
5.2.3 Run time options 131
5.2.4 TDD Config 132
5.2.5 Adjustment 133
6. Using the System Graphical User Interface (GUI) 134
6.1 Main GUI Options 134
6.1.1 Devices Screen – Element Management 134
6.1.2 Events Screen 152
6.1.3 Admin Screen 153
6.1.4 Multi-Stack Screen 166
6.1.5 Channels Screen 167
7. SNMP Management 174
7.1 SNMP Setup 175
7.1.1 Set Protocol Version Parameters (SNMPv2 / SNMPv3) 175
7.1.2 Set Traps Monitoring Destination Addresses 178
7.1.3 SNMP manager Setup: Load the MIB Files 179
7.2 Test the Configuration using a MIB Browser Tool (Recommended) 179
6.3 Trap Variable Bindings 179
7.3 List of traps 181
8. APPENDIX A: Specifications 184
9. APPENDIX B: Ordering information 198

1. Introduction

Corning Everon™ 6000 is an advanced in-building cellular service solution for small, medium and large size venues, supporting a broad range of cellular generations: 3G,4G and 5G.

Corning Everon™ 6000 is based on digital distribution architecture, advanced digital processing, and channelized implementation, enabling efficient utilization of digital links.

The solution is designed to support multi-band, multi-technology and multi-operator networks over a single fibre-based infrastructure.

Corning Everon 6000 high bandwidth distribution architecture provides preparedness for future radio technologies, broader spectrum, and new frequency bands.

Due to its modular design and configuration flexibility, Corning Everon 6000 is highly scalable in terms of supported capacity (number of sectors, frequency bands, channels) and remote units (coverage), and can be easily configured to support a large variety of deployment scenarios including single and multi-building ("Campus") network topologies.

Corning Everon 6000 offers multiple types of digital remote units, supporting a variety of frequency band combinations, SISO/MIMO configurations, with different power levels ranging from 20 dBm per band to 43 dBm per band.

Advanced network configuration and management capabilities enable on-site as well as remote end-to-end configuration, system diagnostics, maintenance and support operators NOC connectivity.

1.1 Key Features and Capabilities

- **Comprehensive service Support** - 600 MHz, 700 MHz, FirstNet, 800/850 MHz, 1900 (PCS), EAWS, 2.3 GHz (WCS), 2.5 GHz (TDD). Support of SISO and MIMO services, FDD and TDD formats. Supports 3G, 4G, 5G technologies
- **Multi-X system** - Supports multi-operator, multi-band, multi-technology services over a single infrastructure. Supports single and multi-building ("campus") network architectures.
- **Highly modular/ Highly scalable** - Can be easily expanded to support additional capacity: sectors, frequency bands, channels and coverage areas via extending the number of remotes.
- **Advanced Digital Signal Processing** - Provides higher dynamic range, enables per channel granularity, delivers enhanced overall power efficiency and improves overall system performance.
- **Digital CPRI based Transport** - Provides robust signal distribution. Ready for future direct interfaces interoperability with digital based capacity sources.
- **Digital Service and capacity routing** - Enables advanced capacity and coverage management through flexible routing configuration management
- **Carrier-grade network management** - Network configuration and management capabilities enable on-site as well as remote end-to-end configuration, system diagnostics, maintenance, support management and control by operators NOC

1.2 Terminology, Acronyms, and Abbreviations

Table 1 Abbreviations

Abbreviation	Description	Picture
Chassis	HEU — Headend unit IHU — Integrated headend unit	
Chassis modules	RIM —Radio interface module OIM — Optical interface module **HCM** — Headend control module **ACM** — Auxiliary control module **FAM** (Fan Module) FMM — Fiber main module* FRM — Fiber remote module* *FMM and FRM are part of the FCM (fiber connectivity module) solution	
DRU	Digital Router Unit	

Abbreviation	Description	Picture
Remote units	LRU Remote Antenna Unit: Medium Band / Low Band	
	MRU — Mid-power remote unit	
	HRU –High-power Remote Unit	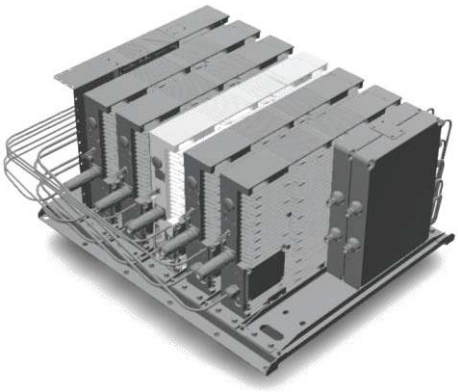
NOC	Network Operation Center	
SMV	Small Medium Venues	
CPRI	Common Public Radio Interface	

Abbreviation	Description	Picture
DSP	Digital Signal Processing	
EARFCN	E-UTRA Absolute Radio Frequency Channel Number	
EPC	Evolved Packet Core	
EUTRA	Evolved Universal Terrestrial Radio Access	
EUTRAN	Evolved Universal Terrestrial Radio Access Network	
FPGA	Field Programmable Gate Array	
GE / GigE	Gigabit Ethernet	
GPS	Global Positioning System	
LTE	Long Term Evolution	
MNO	Mobile Network Operator	
PLMN	Public Land Mobile Network	
RF	Radio Frequency	
SNMP	Simple Network Management Protocol	
TCP	Transmission Control Protocol	
UDP	User Datagram Protocol	
UE	User Equipment	
UL	Uplink	

Abbreviation	Description	Picture
UTRAN	Universal Terrestrial Radio Access Network	
UDP	User Datagram Protocol	

1.3 Applicable Documents

Table 2: References

Document Name	Document #
Everon 6000 UM	MN0020801

1.4 Everon™ 6000 1.0 Architecture Overview

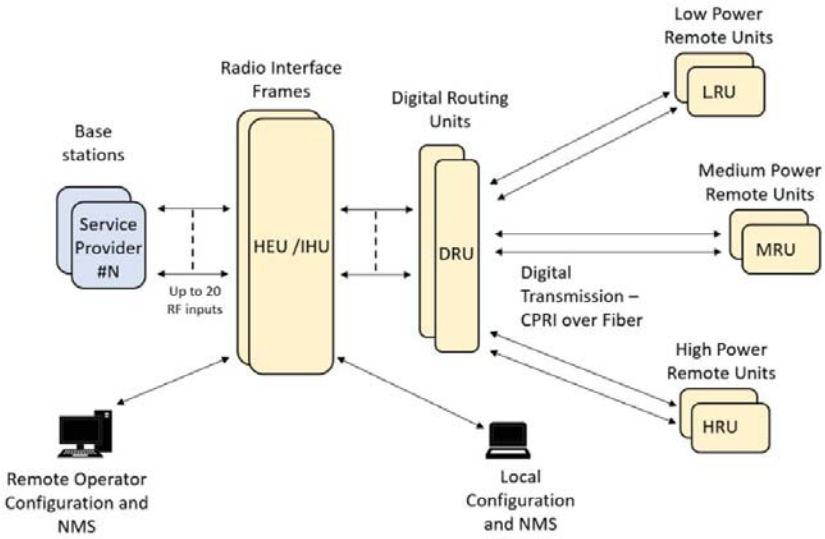

Corning Everon™ 6000 allows combining between Optical Network Evolution (ONE) platform, and the fully digital Corning Building Wireless System (BWS) platform, which incorporates the digital distribution units – Digital Router Unit (DRU) and remotes.

The system devices are managed via a web session to the headend control module (HCM) that is installed as either a headend unit (HEU) or integrated headend unit (IHU). The HCM serves as the element management system (EMS) of the Everon 6000, and provides local and remote management capabilities for all connected system devices using both web GUI (HTTP) and SNMP interfaces.

Note: The HCM is installed in one headend element (HEU or IHU); an auxiliary control module (ACM) is installed in every additional HEU/IHU and OIU chassis. Every ACM is connected either directly or indirectly to the HCM.

1.4.1 External Interfaces and Use Cases - Example

The Everon™ 6000 system connects externally, through the Head End Unit Chassis (IHU, HEU) towards the service provider base station via RF cable.

Internally, the HEU IHU units are connected to the DRU units via Common Public Radio Interface (CPRI) lines.

The system internal configuration and management allows user access flexibility, and is done through the DRU units, according to the needs.

1.4.1.1 SISO Use Case

The following figure shows an example of the system's internal and external connectivity for a single input single output use case:

IHU and HEU - pair to provide all services: single DRU, connected Remote Units (LRU, MRU, HRU), where the number of connected remote units depends on the number of links the specific remote unit has (e.g. DLRU low band has only one CPRI link were the DLRU mid band has 3 CPRI links); each DRU has 32 ports.

The picture below presents a SISO configuration with 16 SISO MRUs connected to a single DRU.

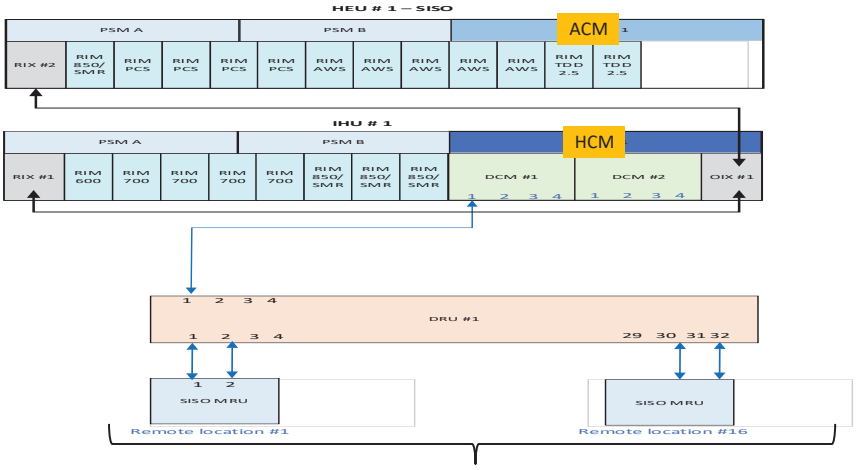

Up to 16 remotes (types: LRU, MRU, HRU) per DRU

1.4.1.2 MIMO Use Case

The following figure shows an example of the system's internal and external connectivity for a multiple input multiple output use case: 4 MIMO streams, each one consists of a pair of HEU-IHU with a single HCM. Each IHU-HEU pair includes up to 2 DCMs; up to 4 DCMs are connected to a DRU, which can support 2x2 MIMO

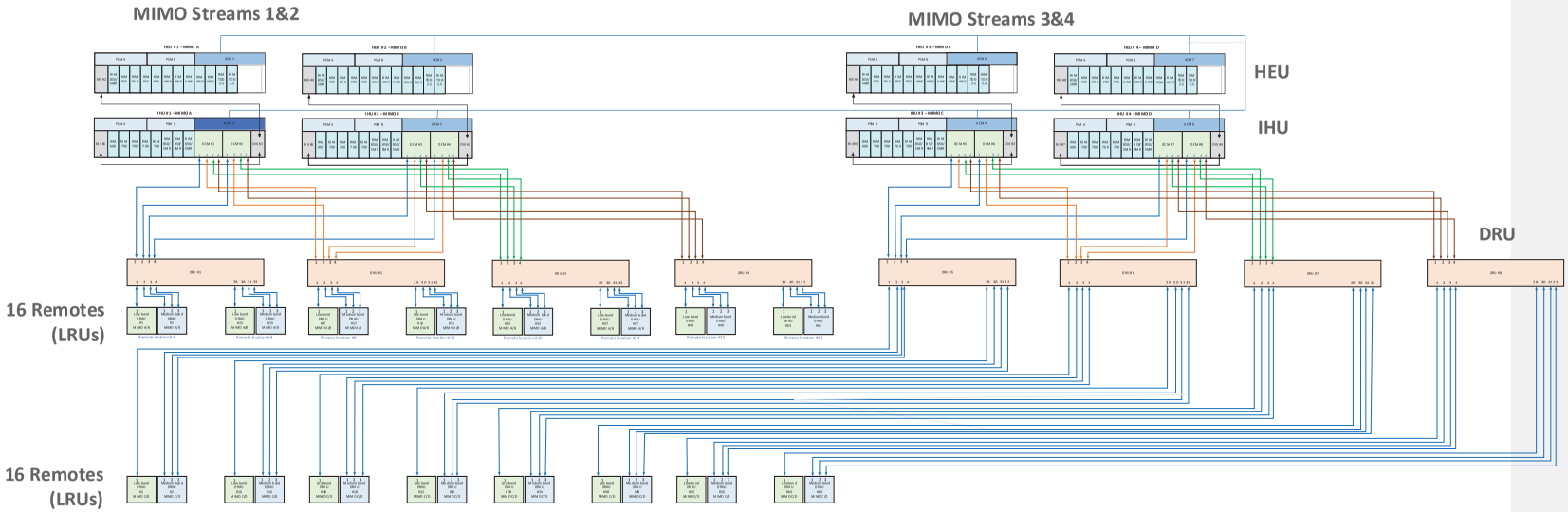

Figure 1 Single stack 4:4 MIMO; all bands; in this example: 32 remote locations

NOTE: A single DRU can support both the low power and high power (LRU and HRU) units. However, if an application requires adding MRUs, a separate DRU will be required to support it.

1.4.2 Internal sub-units

The following sections describe the system sub-units.

1.4.2.1 Head end: Radio Interface Frames (IHU/HEU) (Point of Interface)

Radio Interface frames are modular chassis used for interface between the base stations and the Everon™ 6000. A system may be comprised of two types of Chassis: IHU (Integrated Head-end Unit) and HEU (Head End Unit). The IHU can interface up to 8 RF duplexed ports (or 16 UL/DL simplex ports) and can be expanded by an HEU radio interface frame which provides interface capabilities for additional 12 RF duplexed ports (or 24 UL/DL simplex ports). The following modules are used with the radio interface frames:

- **RIM** (Radio Interface Module) - provides an interface and signal conditioning to signals coupled between the signal source RF antenna ports and the Everon™ 6000 (uplink and downlink)
- **DCM** (Digital Conversion Module) – ***For IHU only!*** Provides RF to CPRI (Downlink) and CPRI to RF (Uplink) conversion, where the well-known CPRI (Common Public Radio Interface) standard is used for representing the RF signals. Each DCM may convert signals capturing up to 190 MHz aggregated bandwidth.
- **RIX** (Radio Interface Expander) - combines downlink signals of the HEU and IHU RIMS and provides the combined signals to the OIX, splits uplink signals arriving from the OIX to the HEU and IHU RIMs.
- **OIX** (Optical Interface Expander) - combines downlink signals arriving from the HEU RIX and the IHU RIX and splits the uplink signal for the HEU RIX and the IHU RIX uplink ports.
- **PSM** (Power Supply Module) (DC or AC) - provides power to the radio interface frame
- **dHCM** (Head-End Control Module) is a "master" frame controller
- **ACM** (Auxiliary Control Module) is a "slave" frame controller controlled by the dHCM

1.4.2.2 Digital Remote Unit (DRU)

The DRU - Digital Routing Unit is the Everon™ 6000 central Hub and Distribution element. The DRU interfaces between the DCM modules and the IHU Radio Interface Frames, allowing to receive the operators service signals in CPRI format, and to route these signals to the remote units. The DRU supports all Corning digital remote antenna units' flavours, for all services, power levels and antenna configurations (SISO or MIMO). Each DRU includes 4 F/O CPRI ports connected to the DCMs and 32 F/O

CPRI ports for connection to the remote units. When additional remote antenna units are needed, the system scales up easily by adding additional system modules. DRU supports both AC and DC.

1.4.2.3 Remote Units

- **LRU** Digital Remote Antenna Unit**:** Medium Band / Low Band

  The LRU is a remote antenna unit with 20 dBm per MIMO stream per band output RF power and native support of 2x2 MIMO antenna scheme. Two types of LRU are available:
  Low band LRU - supports 600 MHz, 700 MHz Low, 700 MHz High, FirtsNet, 800/850 MHz bands via one SFP connection.
  Medium Band LRU - supports EAWS, PCS, WCS and 2.5GHz TDD services via 3 SFP connections.
  The LRU cooling is natural convection with no fans. Due to its IP66 enclosure design the LRU can also be installed outdoors.
  Remotes: Up to 32 MIMO low-power units per DRU (when LRU low-band with a single CPRI port is connected to the DRU)

- **MRU** – Digital Medium-power Remote Unit

  The MRU is a medium power modular remote antenna unit with a single antenna port. The output power for the lower bands: 600/700 MHz Low/700 MHz High/FirstNet, 800/850 MHz is 33 dBm and the output power for the medium bands EAWS, PCS, WCS and 2.5GHz TDD is 37dBm.
  Two SFP connections are used to support all the bands. The MRU modular structure and integrated high-performance cavity-based multiplexing functionalities, enable setups of up to 6 RF modules, for a variety of licensed frequency bands within a single cabinet.
  The MRU also provides CBRS/C-Band ready RF interface for future field upgrades.
  Remotes: Up to 16 SISO mid-power units per DRU

- **HRU** – Digital High-power Remote Unit

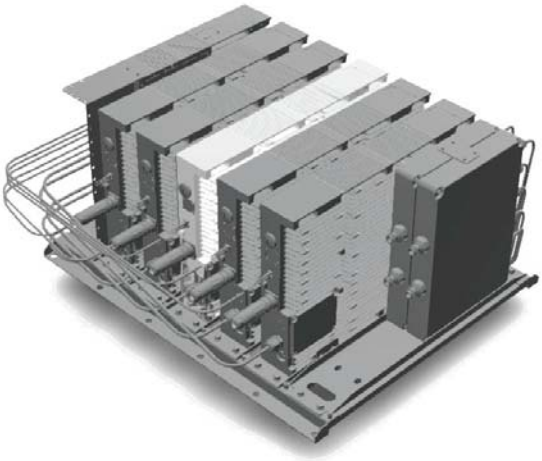

The HRU is a high power modular remote antenna unit which provides 43 dBm output RF power per service module, and native support of 2x2 MIMO antenna scheme. The HRU modular structure enables set ups of up to 8 service modules in 600/700 MHz Low/700 MHz High/FirstNet, 800/850 MHz, EAWS, PCS, WCS and 2.5GHz TDD.
The HRU cooling is based on natural convection, with no fans. Due to its IP65 enclosure design the HRU can also be installed outdoors
Remotes: Up to 8 MIMO high- power units per DRU

- **Synchronization**: 10 MHz clock domain

2. System Installation

This chapter provides installation instructions for the system units. Refer to the specific elements required in your deployment:

- Head End (HEU, HIU), see 2.1
- DRU, see 2.5
- Remote units Installation:
  - LRU, see 2.6
  - MRU, see 2.7
  - HRU, see 2.8

Note: for dimensions and specifications refer to chapter 8.

2.1 Head End Units – Architecture Examples

- **Example 1: SISO**

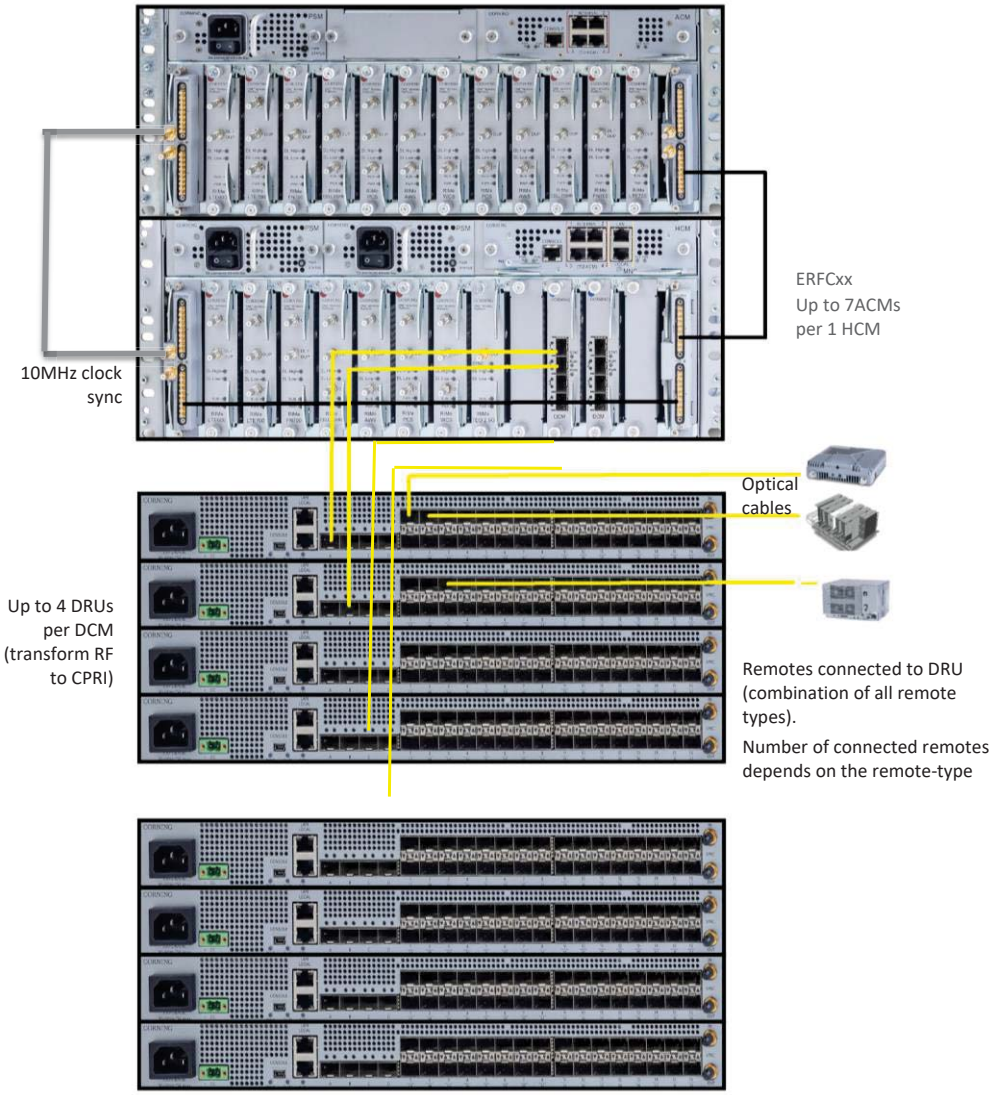

Figure 2: Example: Installation Diagram

Note: Release 1.4 does not support combined connection between MRU and the other remote types. Thus, connect MRUs to a seperate DRU.

NOTEs:

1. The example above shows SISO configuration. For MIMO 2x2, there is a need to add an additional pair of IHU-HEU, where the DCMs for the 2nd pair will be connected to the same DRU.

To support 4x4 configuration, there is a need to add 2 additional pairs of IHU-HEU, and DRUs and remote units.
2. for 4x4 stack: one HCM (for MIMO1 IHU), will be connected to up-to 7 ACMs in the IHU-HEU chassis explained above

- **Example2**

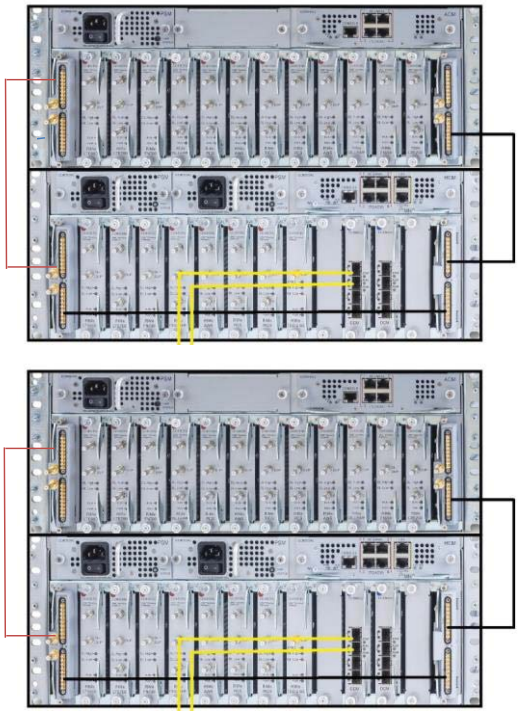

Figure 3 a single rack with 4 head-end units: 2 sets of IHU-HEU. One HCM, the others are ACMs

2.2 Integrated Headend Unit (IHU) Installation

The IHU chassis is supplied empty and only includes the factory assembled Fan Module (FAM) + additional modules according to the ordered PN. All other modules are ordered separately and must be installed.

- **Example of system connection**

  See 2.1 for example rack installations (SISO, MIMO).

- **IHU Expansion Connections TO IHU, HEU and DRU Units**

  A single IHU supports expansion connections as follows:

  - To one additional IHU unit
  - To 7 HEU and 8 DRU

    For details see section **Error! Reference source not found.**

- **To install the IHU, follow these steps:**

  1. Verify box contents, see 2.2.1
  2. Mount the chassis, see 2.2.3
  3. Insert the modules into the chassis, see 2.2.4
  4. Connect the cables, see 2.2.5
  5. If needed: connect additional head end units, see 2.4
  6. Power On, see 2.2.6
  7. Verify normal operation, see 2.2.7

2.2.1 Verify Box Contents

1. Open the package and verify all elements are available according to the following table.

Notes:

** for details refer to APPENDIX B: Ordering information*

**see an example of package unpacking underneeth the table*

Table 3: HEU Package Items List

Item	Quantity	Image
HARDWARE – provided in the box		
Headend Unit Chassis (with blank panels on RIM and one PSM slots) – includes factory installed Fan Module (FAM) in chassis rear	1	
FAM Fan Module (FAM) – single unit hosting 4 fans (factory installed in chassis rear)	1	
RJ45/RJ45 communication cable L=2m-2.15m (P/N 705900003) – HCM management cable	1	
RIM kit: Radio Interface Module (service specific)	1-12 (according to order)	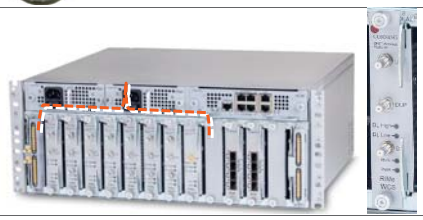
RIX Module Kit Radio Expander Module – expands the RF sources to the OIU	1 or 2 (according to order)	
Pilot Transport Cable (P/N: PCKC47*) – Single QMA to QMA cable; L = 47 in; used for passing	1	

Item	Quantity	Image
reference clock signal connections between RIX modules. *Additional lengths can be ordered: • PCKC20: L=20 in • PCKC63: L=63 in • PCKC79: L=79 in		
ERFC (Expander Cable) - RF interface cable to HEU; 9 pin SMP to SMP connector Available in five different lengths: • ERFC16: L= 16 in • ERFC24: L= 24 in • ERFC34: L= 34 in • ERFC40: L= 40 in • ERFC59: L= 59 in	1	
DCM kit **Optical cables** Up to 900 meters LC/UPC SM DX **SFP+ Pluggable Transceivers** (hot-pluggable optical transceiver module); Support for option 8 line-rate 10.1 Gbps, single mode		
ETM Kit: ETM Expander Termination Module (for unused Expander slot) unit	1	
PSM Kit (AC or DC modules): • **PSM-AC**: 100-240 VAC Power Supply Module including standard IEC 60320-1 C13 cable • **PSM-DC**: 48 V DC Power Supply Module; 9 A Max.; Includes six pin terminal block connectors	1 or 2 kits (according to order)	

Item	Quantity	Image
Controller Module Kit (HCM or ACM - according to order) • **dHCM Kit** (Headend Control Module) – installed in Main HEU unit; enables remote/local management of all hosted units • **ACM Kit** (Auxiliary Control Module) – installed in Auxiliary HEU units; provides management connections for the Auxiliary HEU.		

➢ **Example: Unpacking**

For ordered unit type IHU-2-11-1-A-dH:

Verify your package includes one RIX; one OIX; one ERFC cable; one PSM-AC module and one dHCM module.

2.2.2 IHU Interfaces and Slots

The following figure shows the internal positions of IHU

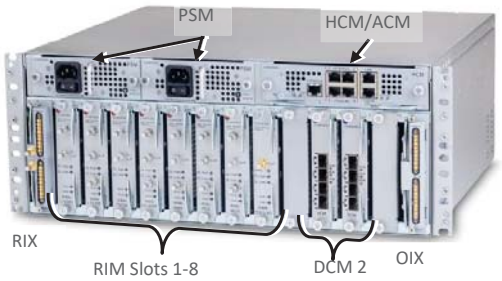

Figure 4: IHU Interfaces and Slots

- **IHU Slots**

NOTE: If DCM cards are available, ensure they are installed in the IHU only (not in the HEU)!

Each IHU includes 14 slots supporting the following modules (see Figure 4: IHU Interfaces and Slots)

Remove blank panel and slide in the relevant module (chassis slots are 100% mistake proof):

- 1 **HCM** (for Standalone/Master HEU units) / (One) ACM (for Auxiliary HEU unit)
- 1 to 2 **PSM** – for single power supply installations, install the PSM in either (PSM) slot
- 1 to 8 **RIM** – no need to terminate unoccupied RIM slot (Slots 2-7)
- 1 to 2 **DCM** (Slots 8-9)
- 1 **RIX** (Slot 1)
- 1 **OIX** slot (Slot 14)

2.2.3 Mount the Chassis in a Rack

Notes:

- *One HEU supports connections to up to four IHUs*
- *IHU chassis requires 4U rack height availability*
- *Rack nuts and screws not provided*

1. Determine the location of the HEU in the rack while considering additional HEU and IHU units and the lengths of the available ERFC cable.
2. Refer to **Error! Reference source not found.** for an example planning the rack positions.
3. Secure the units' rack ears to the rack frame as follows:
   - Insert two screws half-way into the rack frame.
   - Position the chassis on to the screws using the handles and the top and bottom half slots of the rack ears.
   - Secure the unit in the rack via all applicable bracket holes using the appropriate rack nuts and screws.

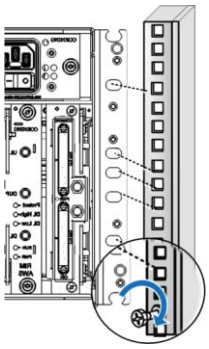

Installing Chassis in Rack

2.2.4 Install the Modules in the Chassis

Note: For modules with ejectors (i.e. RIM, RIX OIM, OIX, DCM and HCM/ACM) – verify that the ejectors are completely open when inserting in dedicated slot and then push in until the module clicks in to the backplane. See Figure 5: Module Captive Screws and Ejectors below, that shows an example of module type captive screws and ejectors.

2.2.4.1 Install the DCM Module

1. Slide the DCM to its slot in the HEU chassis (Refer to 2.6.2 for module slot positioning).
2. Secure the DCM to the Rack with the 2 captive screws

2.2.4.2 Install the rest of the Modules

(Refer to 2.6.2 for module slot positioning)

Referring to the following figure, secure the modules to the backplane by:

- Closing the ejectors (for relevant modules)
- Tightening the captive screws

Figure 5: Module Captive Screws and Ejectors

2.2.5 Connect the Cables

2.2.5.1 Ground

The grounding connection is performed via a two-hole, standard barrel grounding lug located on the HEU rear panel.

- For use with stranded copper wire conductors
- 10-14 AWG
- Holes - 1/4 inch

Grounding Lug (Chassis Rear)

2.2.5.2 Connect RIMS to RF Source(S)

For each RIM - connect the external RF source to the corresponding RIM (service specific) Simplex or Duplex QMA connectors:

a. For each RIM - connect the RF coax cable to the RIM's Simplex or Duplex QMA connectors.

b. Route the connected cables through the Cable Management Tray towards the right or left of the tray (depending on the module location in the chassis).

c. Connect the RF coax cable from the RIM to the corresponding external RF source.

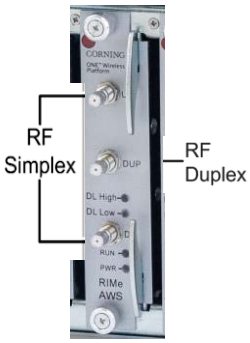

RIMs connections

2.2.5.3 RIX 10 MHz Pilot Clock Connections

Notes:

- *This section is only relevant for configurations with additional IHU or HEU and OIU units.*
- *The REF IN and REF OUT pilot clock ports must be connected in a closed loop.*
- *Both RIX modules of each chassis must be connected.*
- *The jumper cables are routed through the sides of the cable management tray and door.*

Referring to the following Figure, use the QMA/QMA jumper cable (PCKC47 provided with each RIX) to connect the REF OUT and REF IN ports of each of the RIX modules in the HEU chassis. See **Error! Reference source not found.**

Note: use SFP+ from the approved list provided by Corning.

1. Remove the rubber stopper from the source port.
2. Push the SFP+ connector into the port, until it clicks (note that there is only one correct direction for plugging-in).
3. Remove the white plug-protectors from the end of the SFP+ cable.
4. Plug the SFP+ cable into the D-MRU port until it clicks.
5. connect the other edge of the cable to the source unit

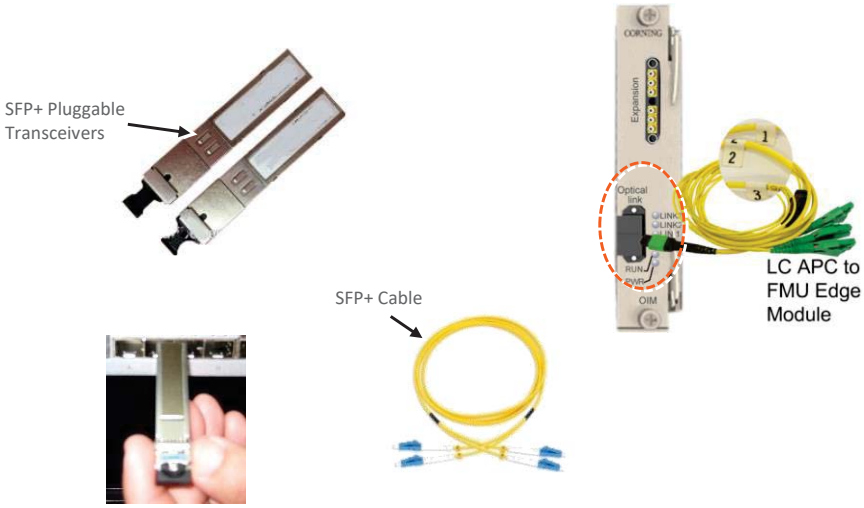

Figure 6 OIM SFP+ LC/UPC connection: Remove rubber stopper from port and from SFP+ Pluggable Transceiver and insert the SFP+ Pluggable Transceivers (hot-pluggable optical transceiver module) into the port.

2.2.5.4 RIX to OIX Connections

Note: Each RIX module supports connections to up to two IHU.

1. Using the appropriate length ERFC cable (according to distance of available OIX port) connect the HEU RIX module 9-Pin connector to the corresponding connector on the IHU OIX module.

2. Refer to TBD for schematic diagram of coax connections in a maximum HEU-OIU configuration of 4x4 where all HEU units are connected to all IHU units.

2.2.5.5 Management Connections

Notes:

- *One RJ45/RJ45 management cable is provided with each headend unit (i.e. HEU/IHU).*
- *Up to 7 ACMs are connected to a single HCM, where the connection between the units is using RJ45 cables.*

- For HCM modules only - using the provided RJ45/RJ45 communication cable, connect the HCM LAN port to the corporate LAN:

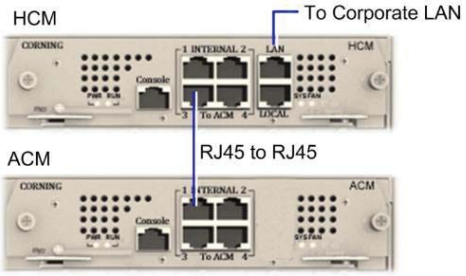

HCM LOCAL Port to ACM Port LOCAL Management Connection

- HCM to ACM Management Connections - using RJ45/RJ45 communication cables perform the headend management connections according to the following:
- Referring to the above Figure - for configurations with one HCM and up to four ACM modules (e.g. one HEU and four HIU units), directly connect as follows

From (any) HCM ….	To (any) ACM…
INTERNAL (TO ACM) Port 1/2/3/4	**INTERNAL (TO HCM)** Port 1/2/3/4

- Referring to the following Figure - for configurations with one HCM and more than four ACM modules (e.g. 4x4 HEU-OIU configurations) where there are only four available HCM INTERNAL ports

2.2.6 Power ON

- For PSM-AC modules – connect supplied power cable (100-240 VAC) connector to the PSM input connector and to the AC outlet and switch on.
- For PSM-DC modules – refer to Quick Start Guide provided with module for wiring pinout.

Verify that the Power Status LED on each PSM shows green. See Figure 13 for PS<-AC LED.

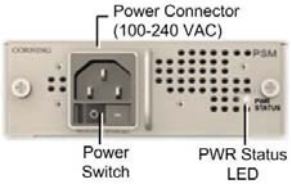

AC Power Supply Module LEDs

2.2.7 Verify NORNAL Operation

If RF source is operational, verify that the RIM, DCM and HCM/ACM LEDs indicate normal operation

Module	LED	Description
RIM	Protect	N/A
	DL High	Off - DL RF input level in threshold range Steady Red – DL RF input level is 3dB above max expected power
	DL Low	Off - DL RF input level in threshold range Steady Red - DL RF input level is 15dB below max expected power
	RUN	Blinking Green - RIM module SW has initialized and is up and running Off – Power off
	PWR	Steady green - Input power is within required range
HCM/ACM	PWR	Steady Green - Power input detected by HCM/ACM
	RUN	Blinking Green – HCM module SW up and running
	SYS	Steady Green - Overall status of the managed system is ok
	FAN	Steady Green – Normal operation status for all fans

2.3 Head End Unit (HEU) Installation

The HEU chassis is supplied empty and only includes the factory assembled Fan Module (FAM) + additional modules according to the ordered PN. All other modules are ordered separately and must be installed.

NOTE: If DCM cards are available, ensure they are installed in the IHU only (not in the HEU)!

- **Interfaces**

The following figure shows the internal positions of HEU

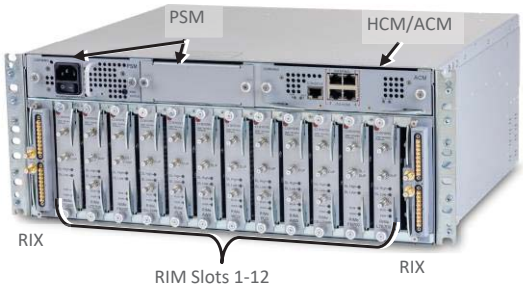

Figure 7: HEU Slots and Interfaces

Each HEU includes 14 slots supporting the following modules:

- RIX slot (Slot 1)
- RIM slots (Slots 2-7)
- One OIX slot (Slot 14)

HEU supports the following expansion connection options: To a single 7 IHUs

- **Example of system connection**

The following figures describe an example rack installation for a maximum 4x4 HEU-IHU configuration in shared and dedicated equipment scenarios. For details refer to the use cases described in section 1.4.1

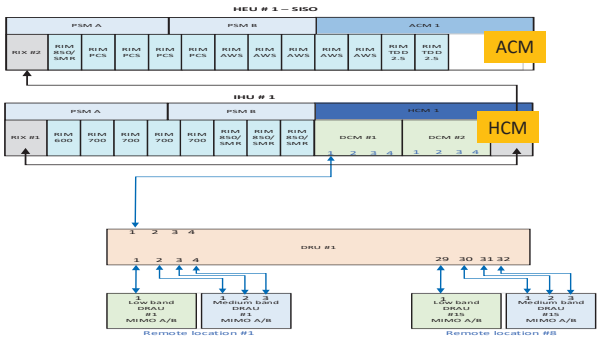

➢ **To install the HEU, follow these steps:**

1. Verify box contents, see 2.3.1
2. Mount the chassis, see 2.3.2
3. Insert the modules into the chassis, see 2.3.3
4. Connect the cables, see 2.3.4
5. Power On, see 2.3.5
6. Verify normal operation, see 2.3.6

2.3.1 Verify Box Contents

1. Open the package and verify all elements are available according to the following table.

Notes:

** for details refer to APPENDIX B: Ordering information*

**see an example of package unpacking underneeth the table*

Table 4: HEU Package Items List

Item	Quantity	Image
HARDWARE – provided in the box		
Headend Unit Chassis (with blank panels on RIM and one PSM slots) – includes factory installed Fan Module (FAM) in chassis rear	1	
FAM Fan Module (FAM) – single unit hosting 4 fans (factory installed in chassis rear)	1	
RJ45/RJ45 communication cable L=2m-2.15m (P/N 705900003) – HCM management cable	1	
RIM kit: Radio Interface Module (service specific) *Note: the modules should be plugged-in instead of the blank panel*	1-12 (according to order)	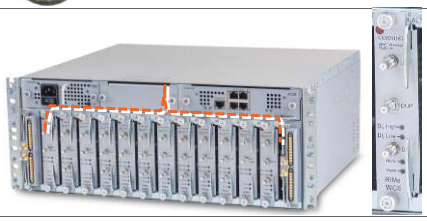

Item	Quantity	Image
RIX Module Kit Radio Expander Module – expands the RF sources to the OIU	1 or 2 (according to order)	
Pilot Transport Cable (P/N: PCKC47*) – Single QMA to QMA cable; L = 47 in; used for passing reference clock signal connections between RIX modules. *Additional lengths can be ordered: • PCKC20: L=20 in • PCKC63: L=63 in • PCKC79: L=79 in	1	
ERFC (Expander Cable) - RF interface cable to HEU; 9 pin SMP to SMP connector Available in five different lengths: • ERFC16: L= 16 in • ERFC24: L= 24 in • ERFC34: L= 34 in • ERFC40: L= 40 in • ERFC59: L= 59 in	1	
ETM Kit: ETM Expander Termination Module (for unused Expander slot) unit	1	
PSM Kit (AC or DC modules): • **PSM-AC**: 100-240 VAC Power Supply Module including standard IEC 60320-1 C13 cable • **PSM-DC**: 48 V DC Power Supply Module; 9 A Max.; Includes six pin terminal block connector	1 or 2 kits (according to order)	

Item	Quantity	Image
Controller Module Kit (HCM or ACM - according to order) • dHCM Kit (Headend Control Module) – installed in Main HEU unit; enables remote/local management of all hosted units • ACM Kit (Auxiliary Control Module) – installed in Auxiliary HEU units; provides management connections for the Auxiliary HEU.		

➢ **Example: Unpacking**

For ordered unit type HEU-1-00-1-A-A:

Verify your package includes one RIX module; one ETM. one PSM-AC and one ACM.

2.3.2 Mount the Chassis

Notes:

- *One IHU supports connections to up to seven Head-end units (HEUs or IHUs) in a single stack, where there in a single HCM per stack, and all the others have ACMs.*
- *HEU chassis requires 3U rack height availability*
- *Rack nuts and screws not provided*

1. Determine the location of the HEU in the rack while considering additional HEU and IHU units and the lengths of the available ERFC cable (see **Error! Reference source not found.** for an example configuration)
2. Secure the units' rack ears to the rack frame as follows:
   - Insert two screws half-way into the rack frame.
   - Position the chassis on to the screws using the handles and the top and bottom half slots of the rack ears.
   - Secure the unit in the rack via all applicable bracket holes using the appropriate rack nuts and screws.

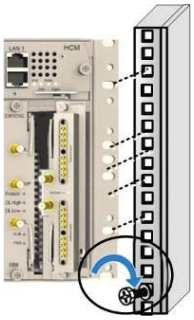

Installing Chassis in Rack

2.3.3 Install the Modules in the Chassis

Note: For modules with ejectors (i.e. RIM, RIX and HCM/ACM) – verify that the ejectors are completely open when inserting in dedicated slot and then push in until the module clicks in to the backplane. See Figure 8: Module Captive Screws and Ejectors below, showing an example of module type captive screws and ejectors.

Refer to the Figure 7: HEU Slots and Interfaces for module locations. Remove blank panel and slide in the relevant module (chassis slots are 100% mistake proof):

- (One) HCM (for Standalone/Master HEU units) / (One) ACM (for Auxiliary HEU unit)
- (One to two) PSM – for single power supply installations, install the PSM in either (PSM) slot
- (Two) RIX modules
- (One to 12) RIM – no need to terminate unoccupied RIM slot

Referring to the following figure, secure the modules to the backplane by:

- Closing the ejectors (for relevant modules)
- Tightening the captive screws

Figure 8: Module Captive Screws and Ejectors

2.3.4 Connect the Cables

2.3.4.1 Ground

The grounding connection is performed via a two-hole, standard barrel grounding lug located on the HEU rear panel.

- For use with stranded copper wire conductors
- 10-14 AWG
- Holes - 1/4 inch

Grounding Lug (Chassis Rear)

2.3.4.2 Connect RIMS TO RF Source(S)

For each RIM - connect the external RF source to the corresponding RIM (service specific) Simplex or Duplex QMA connectors:

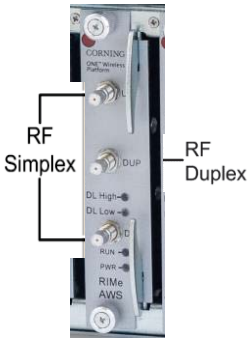

RIMs connections

Note: RIMs of newer version do not have the bottom simplex port

2.3.4.3 RIX TO OIX Connections

Note: Each RIX module supports connections to up to two IHU.

1. Using the appropriate length ERFC cable (according to distance of available OIX port) connect the HEU RIX module 9-Pin connector to the corresponding connector on the IHU OIX module.

2. Refer to TBD for schematic diagram of coax connections in a maximum HEU-OIU configuration of 4x4 where all HEU units are connected to all IHU units.

2.3.4.4 RIX Pilot Clock Connections

Referring to the following Figure (Shared Rack), use the QMA/QMA jumper cable (PCKC47 provided with each RIX) to connect the REF OUT and REF IN ports of each of the RIX modules in the HEU chassis

Note:

- *The REF IN and REF OUT pilot clock ports must be connected in a closed loop as shown in* ***Error! Reference source not found.***
- *Both RIX modules of each chassis must be connected*

2.3.4.5 Management Connections

Notes:

- *One RJ45/RJ45 management cable is provided with each headend unit (i.e. HEU/IHU).*
- *Up to 7 ACMs are connected to a single HCM, where the connection between the units is using RJ45 cables.*

- For HCM modules only - using the provided RJ45/RJ45 communication cable, connect the HCM LAN port to the corporate LAN:

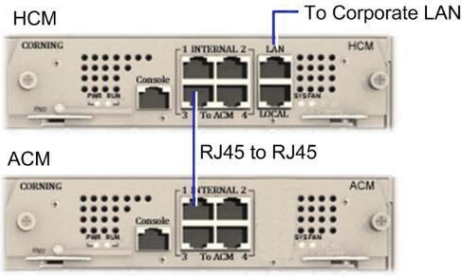

HCM LOCAL Port to ACM Port LOCAL Management Connection

- HCM to ACM Management Connections - using RJ45/RJ45 communication cables perform the headend management connections according to the following:
- Referring to the above Figure - for configurations with one HCM and up to four ACM modules (e.g. one HEU and four HIU units), directly connect as follows

From (any) HCM ….	To (any) ACM…
INTERNAL (TO ACM) Port 1/2/3/4	**INTERNAL (TO HCM)** Port 1/2/3/4

- Referring to **Error! Reference source not found.**- for configurations with one HCM and more than four ACM modules (e.g. 4x4 HEU-OIU configurations) where there are only four available HCM INTERNAL ports

Schematic Example of 4x4 Management Connections

2.3.5 Power ON

- **For PSM-AC modules** – connect supplied power cable (100-240 VAC) connector to the PSM input connector and to the AC outlet and switch on.
- **For PSM-DC modules** – refer to Quick Start Guide provided with module for wiring pinout. Verify that the Power Status LED on each PSM shows green. See Figure 13 for PS<-AC LED.

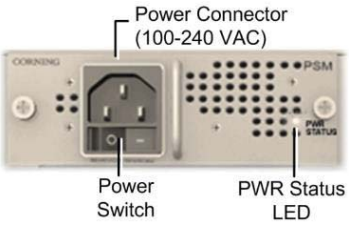

2.3.6 Verify NORNAL Operation

If RF source is operational, verify that the RIM, DCM and HCM/ACM LEDs indicate normal operation

Module	LED	Description
RIM	Protect	N/A
	DL High	Off - DL RF input level in threshold range Steady Red – DL RF input level is 3dB above max expected power
	DL Low	Off - DL RF input level in threshold range Steady Red - DL RF input level is 15dB below max expected power
	RUN	Blinking Green - RIM module SW has initialized and is up and running Off – Power off
	PWR	Steady green - Input power is within required range
HCM/ACM	PWR	Steady Green - Power input detected by HCM/ACM
	RUN	Blinking Green – HCM module SW up and running
	SYS	Steady Green - Overall status of the managed system is ok
	FAN	Steady Green – Normal operation status for all fans

2.4 Additional stack and DRU connections

➢ **For connections to additional IHU or HEU and DRU units:**

Using the appropriate length ERFC cable (according to distance of available OIX/RIX port) connect remaining IHU RIX and OIX module connectors as follows:

- Connections to additional IHU unit:
  - IHU #1 RIX 9-Pin connector to the corresponding IHU #2 OIX module
  - IHU #1 OIX 9-Pin connector to the corresponding IHU #2 RIX module
- Connections to additional HEU and OIU units:
  - IHU RIX 9-Pin connector to the corresponding connector on the OIX module of the additional OIU.
  - IHU OIX 9-Pin connector to the corresponding connector on the RIX module of the additional HEU.

Note: The RIX and OIX modules of the additional HEU unit must also be connected.

See use cases for details, section 1.4.1

2.5 DRU Installation

2.5.1 Verify box contents

The following table indicates the included and required items for installing the DRU unit.

Item	Quantity	Image	Part Number
HARDWARE – provided in the box			
DRU unit	1		703A045402
AC Power Cord			708A042301
DC Power Adapter			255760003
HARDWARE – not provided			
Screws Washers	4 4		NA
SFP+ Pluggable Transceivers (hot-pluggable optical transceiver module); Support for option 8 line-rate 10.1 Gbps, single mode			NA
Optical cables Up to 900 meters LC/UPC SM DX			NA
Power cable DC: 48v AC: 100-240v		 Note: The image is an illustration only.	NA
Ethernet cable			NA

Item	Quantity	Image	Part Number
Grounding cable			NA
Clock 10Mhz input clock 10Mhz output clock			NA
USB to mini-USB cable Note: for technical support usage only.			NA
Required Tools			
Screwdriver			NA

2.5.2 DRU Interfaces

The following images indicate the DRU interfaces

- **Front view**

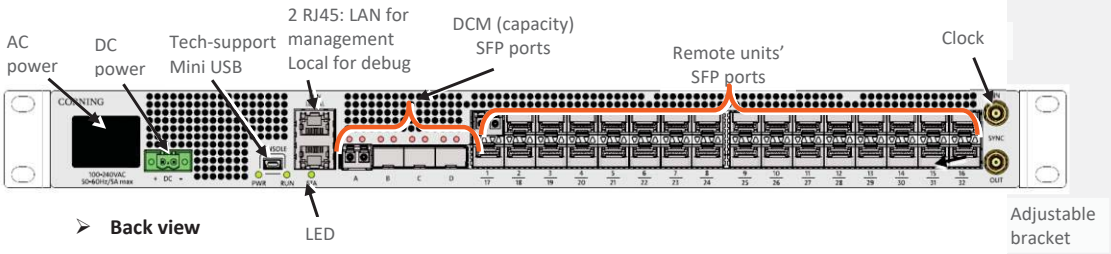

- **Back view**

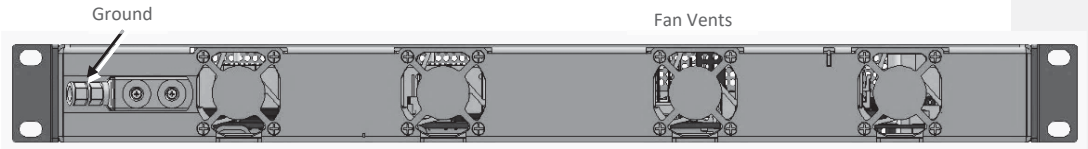

- **Side view**

2.5.3 DRU Dimensions [mm]

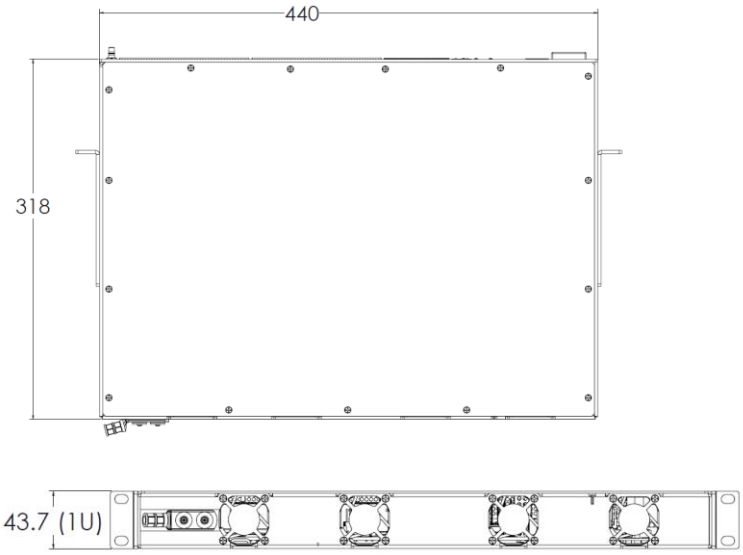

Attribute	Description
Height	1U (44.45 mm)
Width	19" (482.6 mm)
Depth	16.5" (419 mm)
Weight	9 kg (max)

2.5.5 Mount the DRU in the 19’’ Rack

1. Determine the location of the DRU in the rack while considering additional units (e.g. power supply).
2. Position the two brackets located on the DRU sides to fit in to the rack rail.
3. Slide the DRU module into the selected slot on the 19” chassis rear. Ensure the module is flush with the chassis rear.
   Ensure at least 2” distance between the ventilation openings (in the rear and sides of the DRU) and any object (e.g. wall)
4. Secure the unit’s rack ears to the rack frame, via applicable bracket holes, using the appropriate nuts and screws. using 2 screws in each side.

2.5.6 Connect the Cables

2.5.6.1 Ground

1. Connect one side of the grounding cable to the DRU rear grounding point and secure with 4 mm screw and washer.
2. Connect the other side of the grounding cable to grounding.

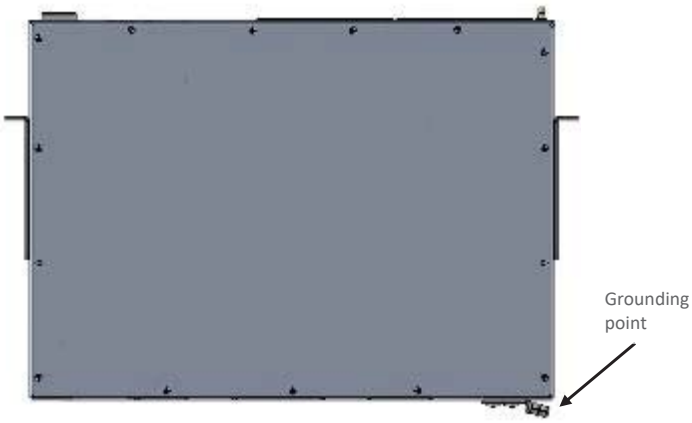

2.5.6.2 Power

Use your selected power source (DC or AC); Connect the power-unit's cable to the DRU front panel.

2.5.6.3 Source (DCM)

Connect an SFP+ Pluggable Transceiver to each source port to be used:

1. Remove the rubber stopper from the SFP connector.
2. Remove the rubber stopper from the source port (Figure 9).
3. Push the SFP connector into the DCM port, until it clicks (note that there is only one correct direction for plugging-in).
4. Remove the white plug-protectors from the end of the SFP cable.
5. Plug the LC/UPC SM DX cable into the DCM port until it clicks.
6. connect the other edge of the cable to the source unit

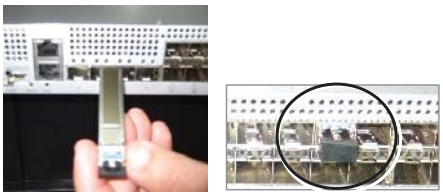

Figure 9 Remove rubber stopper from port and from SFP+ Pluggable Transceiver

2.5.6.4 Remotes

Remotes (i.e.: LRU, MRU, HRU): Connect an SFP+ Pluggable Transceiver to each remote port to be used:

1. Remove the rubber stopper from the SFP connector.
2. Remove the rubber stopper from the DRU-to Remote port (Figure 9).
3. Push the SFP connector into the remote port, until it clicks (note that there is only one correct direction for plugging-in).
4. Remove the white plug-protectors from the end of the SFP cable.
5. Plug the LC/UPC SM DX cable into the remote port until it clicks.
6. connect the other edge of the cable to the remote unit

2.5.7 Verify Normal Operation

➢ **SFP LED Behavior**

Status	Description	LED State	
		Green	Amber
SFP Plugout	SFP Plugout	OFF	OFF
Optic Link Fail	1. Optic cable disconnected	OFF	ON
	2. SFP fail		
	2.1 SFP fault		
	2.2 SFP warning		
	2.3 SFP alarm		
	3. CPRI link down		
Optic Link Ok	1. Optic cable connected	ON	ON
	2. SFP ok		
	3. CPRI link down		
CPRI Link Ok	1. Optic cable connected	ON	OFF
	2. SFP ok		
	3. CPRI link up		

The following tables describe the DRU LEDs and the LED behaviour:

LEDs Type	Description and Behavior	Picture
Remote (LPR) LEDs	Description: A pair of LEDs (Orange; Green) describes each port: the right pair relates to the upper slot; the left pair relates to the lower slot. Behaviour: Right orange LED is lit during identification and when inserting the connector. Left green LED is lit after CPRI link connection	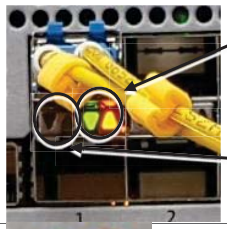
Source LEDs	Description: A pair of LEDs (Orange; Green) describes each port. Behaviour: Right orange LED is lit during identification and when inserting the connector. Left green LED is lit after link connection	

LEDs Type	Description and Behavior	Picture
Power LED RUN LED STAtus LED	Lit after SW initialization and during operation.	
LAN (Ethernet) LED		
General system LED behaviour	During power up all LEDS are lit After SW initialization only power, run and LAN are lit (The optical LEDS are off)	

The following tables describe the DRU LEDs and the LED behaviour:

LEDs Type	Description and Behavior
Remote unit LEDs	Description: A pair of LEDs (Orange; Green) describes each port: the right pair relates to the upper slot; the left pair relates to the lower slot. Behaviour: Right orange LED is lit during identification and when inserting the connector. Left green LED is lit after CPRI link connection
Source LEDs	Description: A pair of LEDs (Orange; Green) describes each port. Behaviour: Right orange LED is lit during identification and when inserting the connector. Left green LED is lit after link connection
Power LED RUN LED STAtus LED	Lit after SW initialization and during operation.
LAN (Ethernet) LED	
General system LED behaviour	During power up all LEDS are lit After SW initialization only power, run and LAN are lit (The optical LEDS are off)

2.6 LRU Installation

Commented [RR1]: להחליף לתמונות של ארז

2.6.1 Verify box Contents

1. Open the package and verify all elements are available according to the following table:

Table 5: LRU Package Items List

Item	Quantity	Image	Part Number
HARDWARE – provided in the box			
LRU unit	1		LRU-678 (supporting low bands in MIMO configuration: 600, 700 and 800/850) LRU-17192325 (supporting mid bands in MIMO configuration: PCS, AWS, WCS and 2500)
Wall Mounting Bracket (may also be used for pole)	1	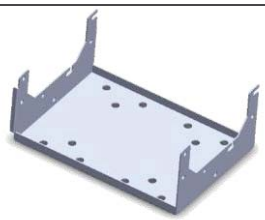	BR-LRU
Side brackets for dual-unit configuration			PN
Combiner – for dual unit configuration			CR-LRU

Item	Quantity	Image	Part Number
RF Jumper cables			PN
DC Power Adapter			255760003
HARDWARE – not provided			
4 screws #8 or 4mm (for attachment to ceiling)	4		
SFP+ Pluggable Transceivers (hot-pluggable optical transceiver module); Support for option 8 line-rate 10.1 Gbps, single mode			
Optical cables Up to 900 meters LC/UPC SM DX			
SOFTWARE			
NA			
Required Tools			
Phillips Screwdriver			

2.6.2 LRU Dimensions [mm]

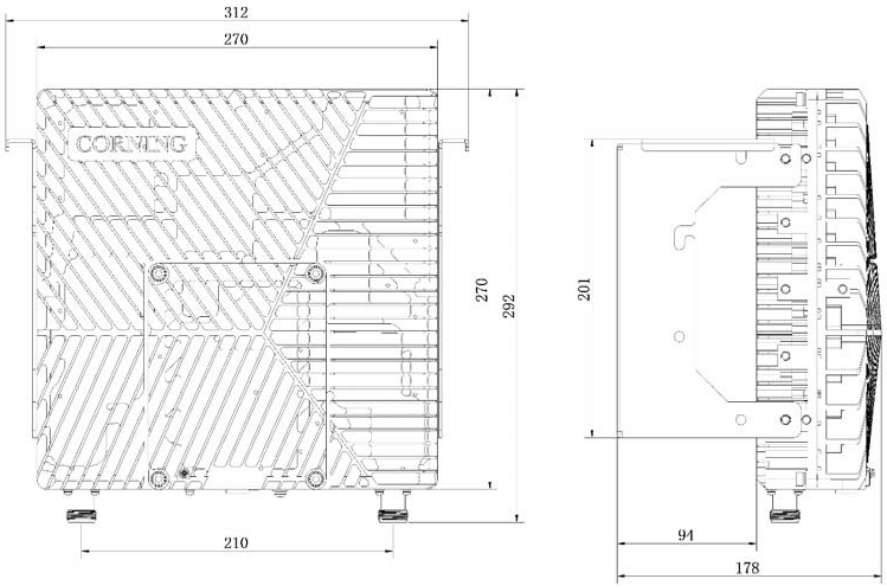

Physical Dimensions		
Dimension (W x H x D)	Inch (mm)	9.84 x 10.63 x 2.75 (250 x 270 x70)
Weight	Lbs (Kg)	13 (6)

2.6.3 LRU Interfaces

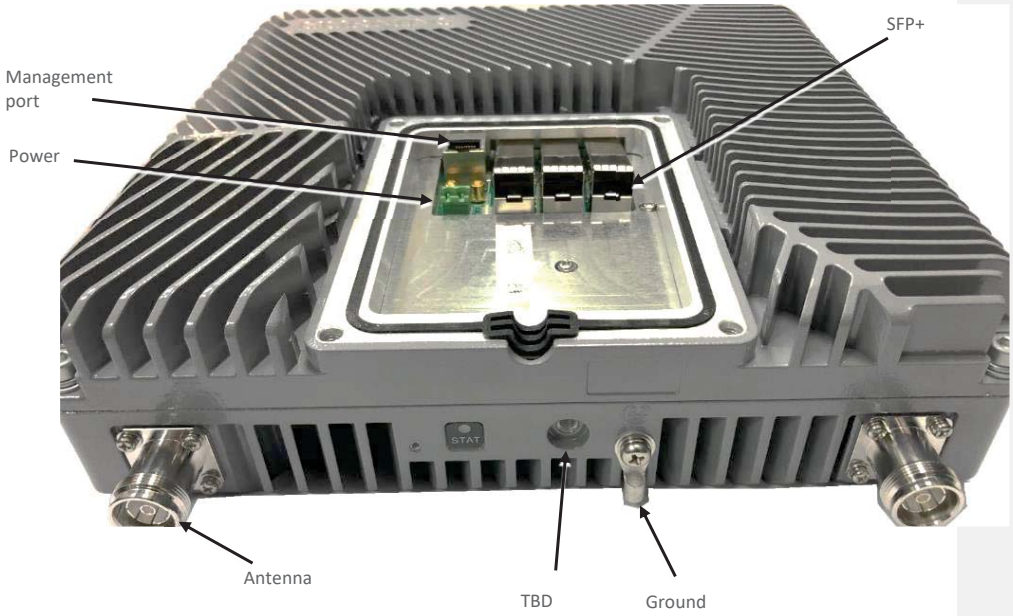

Connectors	
CPRI Port	1, SFP+ 10.1Gbps
Antenna Ports	2, 4.3-10 female

2.6.4 Combiner Interfaces

The combiner has a total of 6 input ports and 2 output ports.

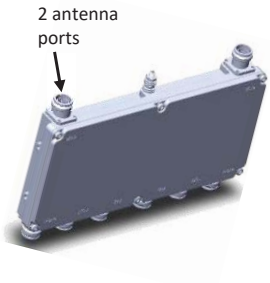

Notes:

1. *To avoid MIMO disruption, ensure the antennas are connected correctly according to the combiner labels.*
2. *There may be some configurations/use-cases where a combiner is not required, as there is only one type of unit (either low or mid band)*

- **Combiner Connection Interfaces Diagram**

  The combiner connects between units:

  - Mid-band LRU
  - Low-band LRU
  - (In the future: High-band (CBRS) LRU)

  The antennas are MIMO1, MIMO2

2.6.5 Fully connected system diagram

The following figure shows the connections in a system that includes two units and a combiner.

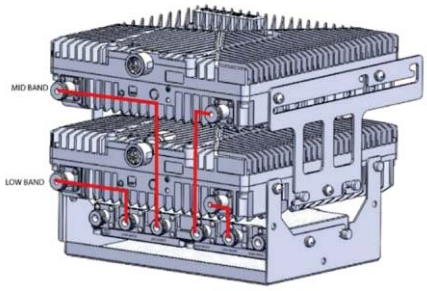

Connected Cables

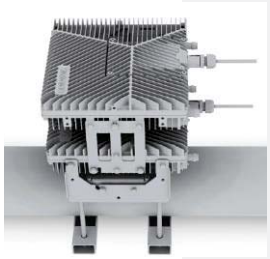

2.6.6 Connect under-lid cables

For each of the units, open the cover by removing 4 screws:

For each of the units connect the internal (under-cover) cables as follows:

- Power, See 2.6.6.1**Error! Reference source not found.**
- SFP+, see 2.6.6.2

2.6.6.1 Power

Connect the DC wire pair (48V) to the LRU connectors panel, via the DC power adapter (terminal block connector

2.6.6.2 SFP+ Cables

Remove the rubber stopper from the SFP+ connector located in the LRU RF port

Connect the SFP+ LC/UPC SM DX optic cable to the LRU optic connector.

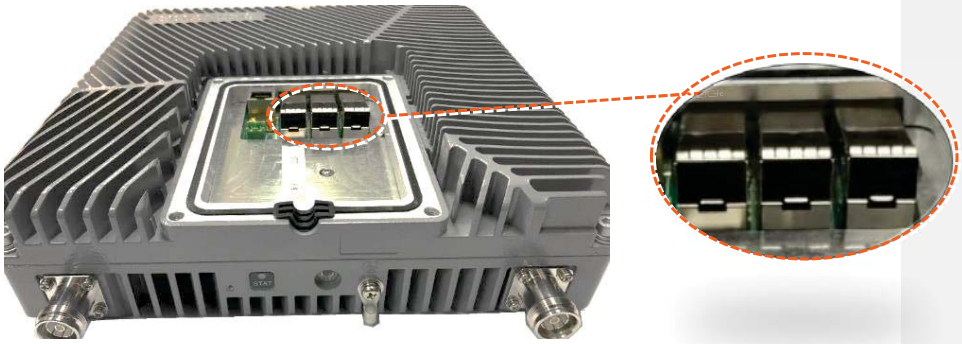

Figure 10 Remove rubber stopper from port and from SFP+ Pluggable Transceiver and insert the SFP+ Pluggable Transceivers (hot-pluggable optical transceiver module) into the port.

2.6.7 Mount the LRU

The LRU may be mounted on a wall or on a pole; single or dual.

Select the configuration relevant to your deployment.

Note: For dual-unit installations, the internal RF connections must be connected before connecting between the units.

2.6.7.1 Mount on a wall

Note: for the rear cases of pole mounting, refer to…TBD

1. Connect the bracket to the wall, using 4 screws, as shown in the figure below:

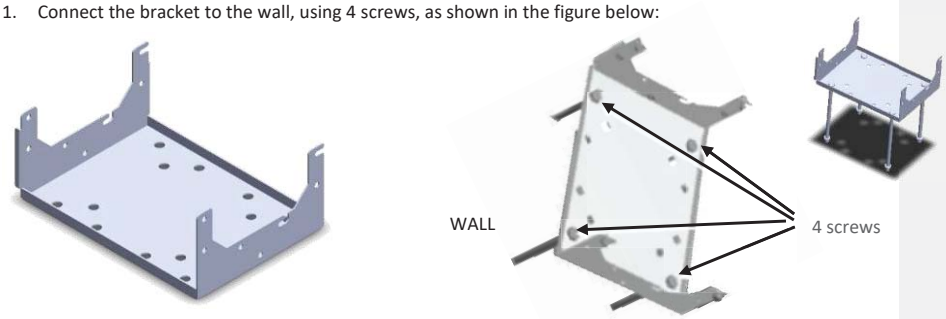

2. For a single unit: mount the LRU on the bracket, using 4 screws

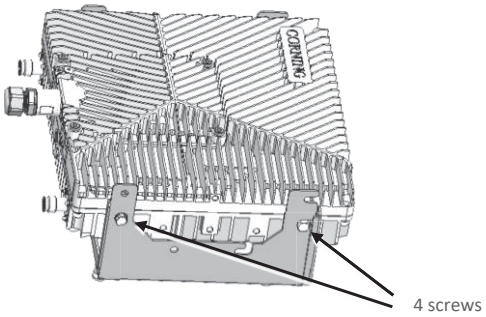

3. **For a dual unit**:
   - Connect the combiner to the mounted bracket using 4 screws.

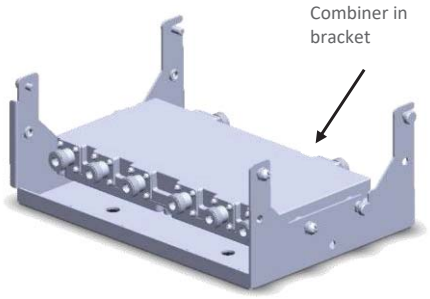

   - Connect between the low band and mid-band units, using the side-bracket:

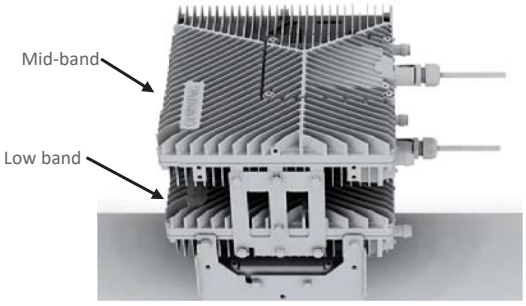

Note: Ensure the low band device is connected at the bottom, and the mid-band on top!

   - Connect between the two devices and the base bracket (already carrying the combiner), using 4 screws, as shown below:

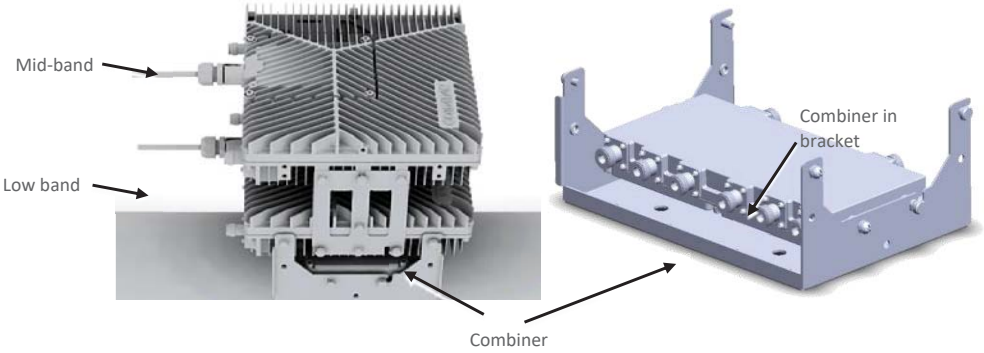

2.6.8 Connect the rest of the Cables

For each of the units, connect the cables as follows:

- Ground, see 2.6.8.1
- Antenna, see 2.6.8.2

2.6.8.1 Ground

Note: Ground according to local regulations

The following additional (not supplied) tools and components are required for connecting the system ground:

- Grounding wire - grounding wire should be sized according to local and national installation requirements. The provided grounding lug supports 14 AWG to 10 AWG stranded copper (or 12 AWG to 10 AWG solid) wire conductors.

1. Use a wire-stripping tool to remove approximately 0.4 inch (10.9 mm) of the covering from the end of the grounding wire
2. Insert the stripped end of the grounding wire into the open end of the grounding lug
3. Crimp the grounding wire in the barrel of the grounding lug. Verify that the ground wire is securely attached to the ground lug by holding the ground lug and gently pulling on the ground wire
4. Prepare the other end of the grounding wire and connect it to an appropriate grounding point at the site to ensure adequate earth ground

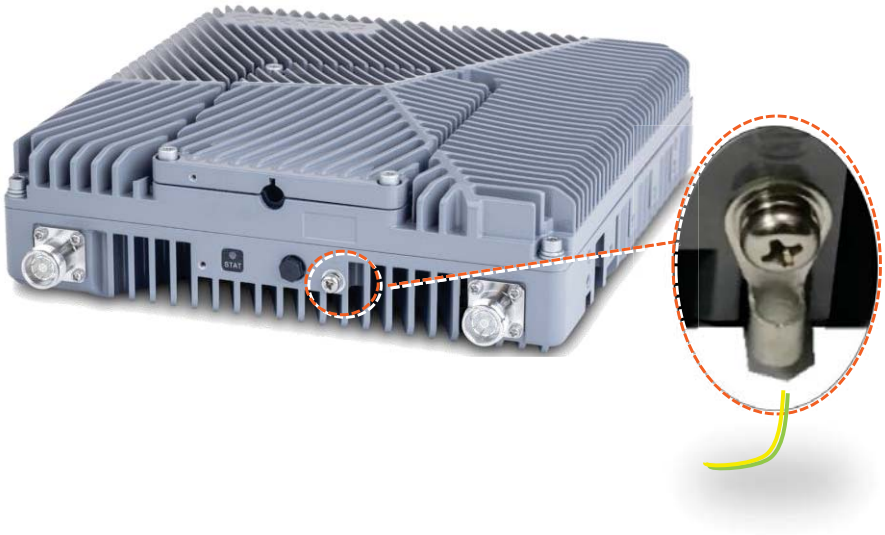

2.6.8.2 Antenna

Connect the MRU male 4.3-10 Type duplexed RF “ANTENNA” port to the broadband antenna(s) using appropriate coax cables.

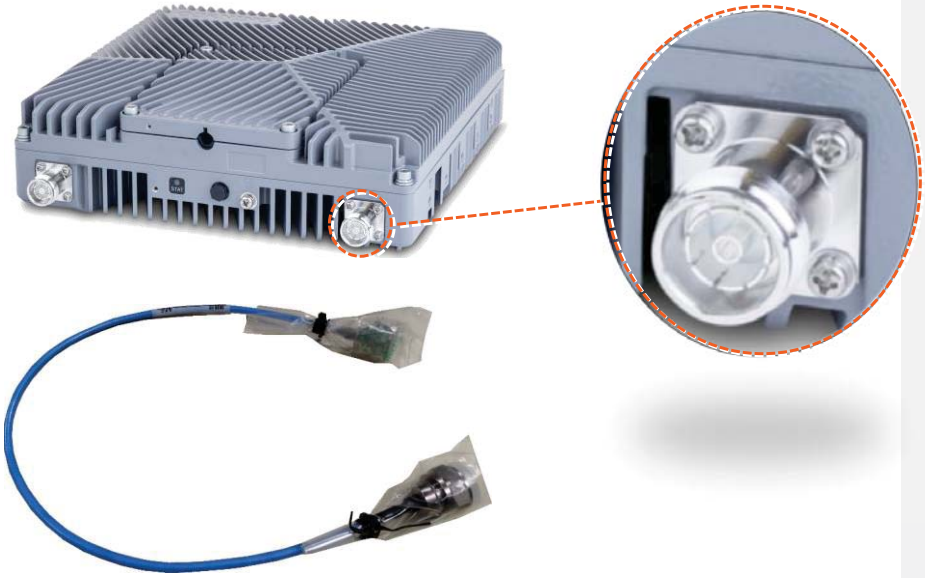

Notes:

1. *To avoid MIMO disruption, ensure the antennas are connected correctly according to the combiner labels.*
2. *There may be some configurations/use-cases where a combiner is not required, as there is only one type of unit (either low or mid band)*

2.6.9 Combiner cables

Connect the Antenna cables according to the figure below.

NOTE: C-Band is for future use.

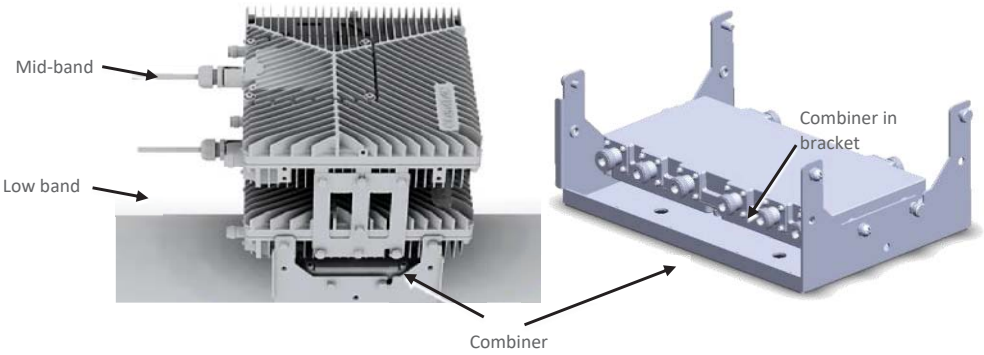

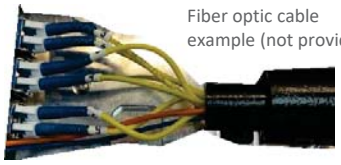

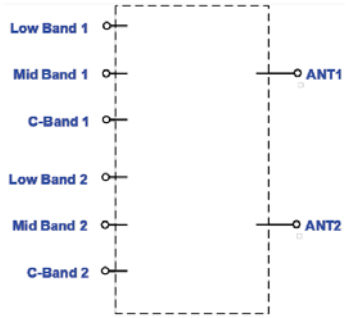

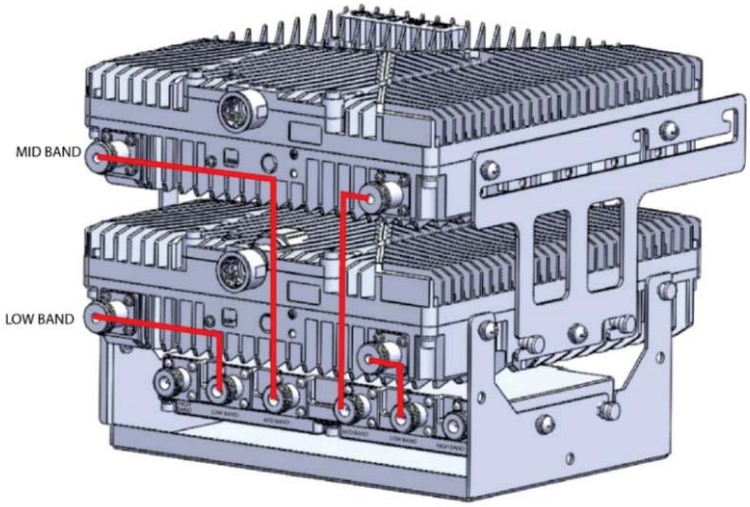

Fully connected system

Notes:

1. *To avoid MIMO disruption, ensure the antennas are connected correctly according to the combiner labels.*
2. *There may be some configurations/use-cases where a combiner is not required, as there is only one type of unit (either low or mid band)*

2.6.10 Verify normal operation

The following table describes the LRU LED behaviour.

MODULE LED	Outside the module		
Status	**Description**	**Color**	**State**
Power Up	The LPR was powered up	Green	Solid
RUN	The system is up and running	Green	Blinking (1Hz)
Identify	Identify RU was activated	Green	Blinking (2Hz)
Over temperature	The LPR temperature exceeded the max. range	Red	Blinking (1Hz)
HW Failure	HW failure occurred	Red	Solid
SFP LED (Same as DRU)			
SFP LEDs	Inside the module		
Status	**Description**	**LED State**	
		Green	**Amber**
SFP Plugout	SFP Plugout	OFF	OFF
Optic Link Fail	1. Optic cable disconnected	OFF	ON
	2. SFP fail		
	2.1 SFP fault		
	2.2 SFP warning		
	2.3 SFP alarm		
	3. CPRI link down		
Optic Link Ok	1. Optic cable connected	ON	ON
	2. SFP ok		
	3. CPRI link down		
CPRI Link Ok	1. Optic cable connected	ON	OFF
	2. SFP ok		
	3. CPRI link up		

2.7 MRU (Digital Medium-power Remote Unit) Installation

dMRU Notes:

** Equipment with permanently connected to PE, conductor for installation of this conductor is carried by a skilled person.*

** The shield of the coax cable shall be connected to PE .*

** Equipment for use in locations where children not likely to be present.*
** dMRU DC shall be provided with double pole circuit breaker rated maximum 20A and having contact separation at least 3mm.*

2.7.1 Verify Box Contents

1. Open the package and verify all elements are available according to the following table.

Notes:

** for details see APPENDIX B: Ordering information*
** See unpacking example underneeth the table.*

Table 6: MRU Package Items List

Item Description	Flavor	PN	Image
Mid-power Remote Unit Chassis (includes two rack ears for 19-in rack – factory assembled onto sides of MRU) Quantity: 1	AC Chassis		
	dMRU Chassis Assembly with: DOPTM, FAM, Mid-Plane, Cavity Filter, MUX and AC power supply	***dMRU-ASM-AC***	
	dMRU-AC supported assembly with three dPAM modules - 600/700, PCS and WCS	**dMRU-671923-AC**	
	dMRU-AC supported assembly with four dPAM modules - 600/700, 800/850, AWS and PCS	**dMRU-6781719-AC**	
	dMRU-AC supported assembly with five dPAM modules - 600/700, 800/850, AWS, PCS, WCS and 2.5	**dMRU-67817192325-AC**	
	dMRU-AC supported assembly with five dPAM modules - 600/700, 800/850, AWS, PCS and WCS	**dMRU-678171923-AC**	

Item Description	Flavor	PN	Image
	dMRU-AC supported assembly with three dPAM modules - 600/700, 800/850 and PCS	**dMRU-67819-AC**	
	dMRU-AC supported assembly with four dPAM modules - 600/700, 800/850, PCS and WCS	**dMRU-6781923-AC**	
	DC Chassis		
	dMRU Chassis Assembly with: DOPTM, FAM, Mid-Plane, Cavity Filter, MUX and DC power supply	***dMRU-ASM-DC***	
	dMRU-DC supported assembly with three dPAM modules - 600/700, AWS and PCS	**dMRU-671719-DC**	
	dMRU-DC supported assembly with three dPAM modules - 600/700, PCS and WCS	**dMRU-671923-DC**	
	dMRU-DC supported assembly with four dPAM modules - 600/700, 800/850, AWS and PCS	**dMRU-6781719-DC**	
	dMRU-DC supported assembly with five dPAM modules - 600/700, 800/850, AWS, PCS and WCS	**dMRU-678171923-DC**	
	dMRU-DC supported assembly with five dPAM modules - 600/700, 800/850, AWS, PCS, WCS and 2.5	**dMRU-67817192325-DC**	
	dMRU-DC supported assembly with three dPAM modules - 600/700, 800/850 and PCS	**dMRU-67819-DC**	

Item Description		Flavor	PN	Image
		dMRU-DC supported assembly with four dPAM modules - 600/700, 800/850, PCS and WCS	**dMRU-6781923-DC**	
		dMRU CHASSIS ASSEMBLY WITH: DOPTM, FAM, MID-PLANE, CAVITY FILTER, MUX	**dMRU-CHS-ASM**	
Brackets	Wall mount bracket for dMRU Screws, flathead,8-32X3/8 (Quantity: 11)	1	BR-dMRU-W	
DC connector class 1 mating		1		
Not provided				
AC Power Cable (AC models only)	Cable, power, straight, U.S 10 A ,UL, L = 1.8-2.5m ,black,110 V	1		
	SFP+ Pluggable Transceivers (hot-pluggable optical transceiver module); Support for option 8 line-rate 10.1 Gbps, single mode	?		
	Termination plug (for test port and 3.5 GHz port)			
	Optical cables Up to 900 meters LC/UPC SM DX			
	Grounding cable: The provided grounding lug supports 14 to 10 AWG stranded copper (or 12 to 10 AWG solid) wire conduction			
	Service-specific power amplifier modules (PAMs), that are NOT provided		HRU-dHPOM	

- **Example Package Unpacking**

  For an ordered package of PN ***dMRU-ASM-AC***: Open the box and verify the following units are available: DOPTM, FAM, Mid-Plane, Cavity Filter, MUX and AC power supply.

  The units are to be entered into the chassis according to the installation instructions below.

2.7.2 MRU Interfaces

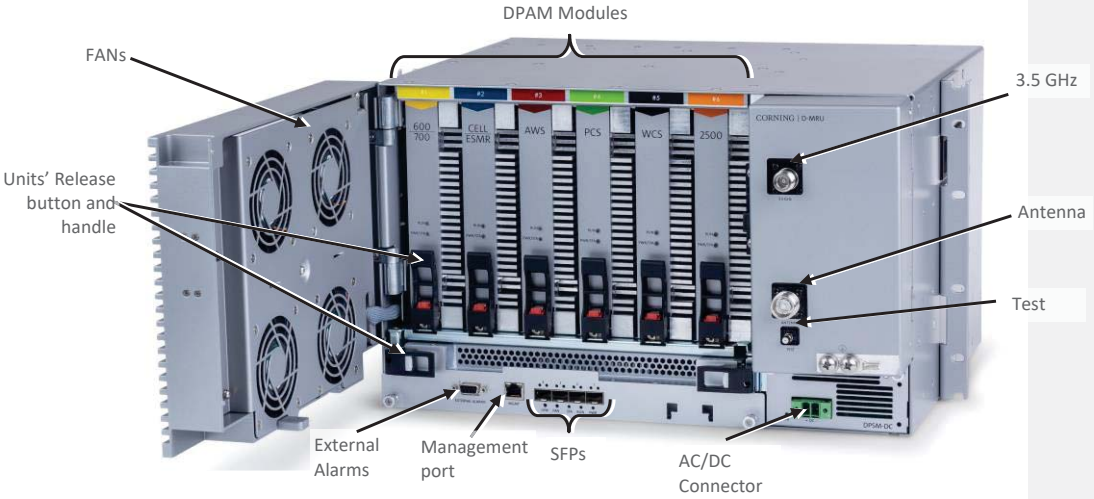

Warning! *In the event that a PAM or the OPTM needs to be removed from the chassis, make sure to first press the release button on the module and then pull out using the handle (see* ***Error! Reference source not found.****). Any attempt to pull out the module without first releasing may cause damage.*

Corning will not be liable for damage of products resulting from improper handling during installation or repair.

PAMs are entered to their relevant slots by matching the color of the PAM and the color on top of the slot.

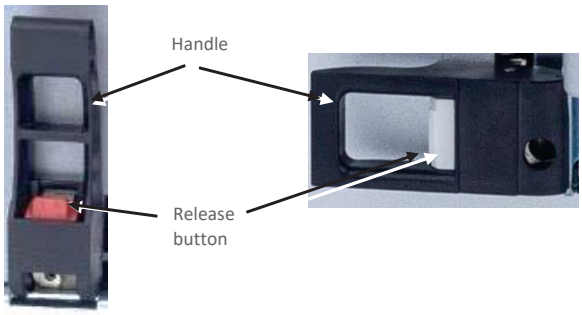

Notes:

** MRU chassis requires 6U rack height availability*
** Rack nuts and screws not provided*
** Digital optical module & FAN are pre-installed in the chassis*

2.7.3 Mount chassis in 19-in Rack

Note: for dimensions and specifications refer to chapter 8

1. Before mounting the chassis: unwrap each of the PAMs, and enter each PAM to its dedicated slot inside the chassis, according to the color-codes:

2. Determine the location of the MRU in the rack while considering additional units (e.g. power supply)
3. Referring to Figure 11 secure the units' rack ears to the rack frame as follows:
    a. Insert two screws halfway into the rack frame (one on each side)
    b. Position the bottom half slots of the chassis rack ears onto the screws
    c. Secure the unit in the rack via remaining applicable bracket holes using the appropriate rack nuts and screws

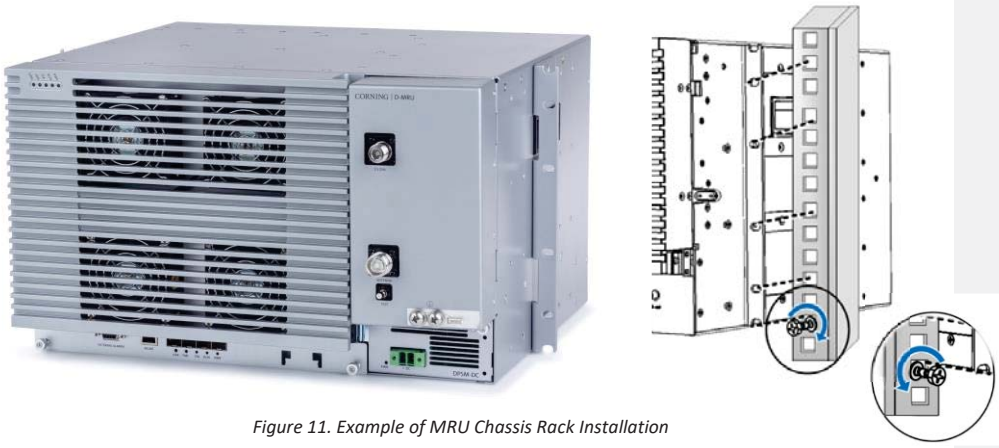

Figure 11. Example of MRU Chassis Rack Installation

2.7.4 Wall Mount

This section provides instructions on how to assemble the wall-mount bracket onto the MRU and mount the assembly on the wall (belly-to-wall installation).

***Note**: The installer is responsible for accommodating the installation to the surface type. The mounting surface shall be capable of supporting the weight of the equipment. The weight of a fully populated MRU chassis is 92.59 lbs (42 kg).*

***ATTENTION**! In the event that a PAM or the OPTM needs to be removed from the chassis, make sure to first press the release button on the module and then pull out using the handle (see Error! Reference source not found.). Any attempt to pull out the module without first releasing may cause damage.*

Corning will not be liable for damage of products resulting from improper handling during installation or repair.

Caution: Due to the chassis + 6 DPAMS weight, it is recommended the unit is carried by two persons, to avoid damage to the system.

- **To mount the MRU onto the wall**

1. Select location and mark and drill appropriate holes in the wall

***IMPORTANT**! MRU is installed belly-to-the-wall with door opening rightward.*

***Note**: Make sure that there is at least 16 inches of clearance to open the MRU door to the right and to successfully remove and replace all modules.*

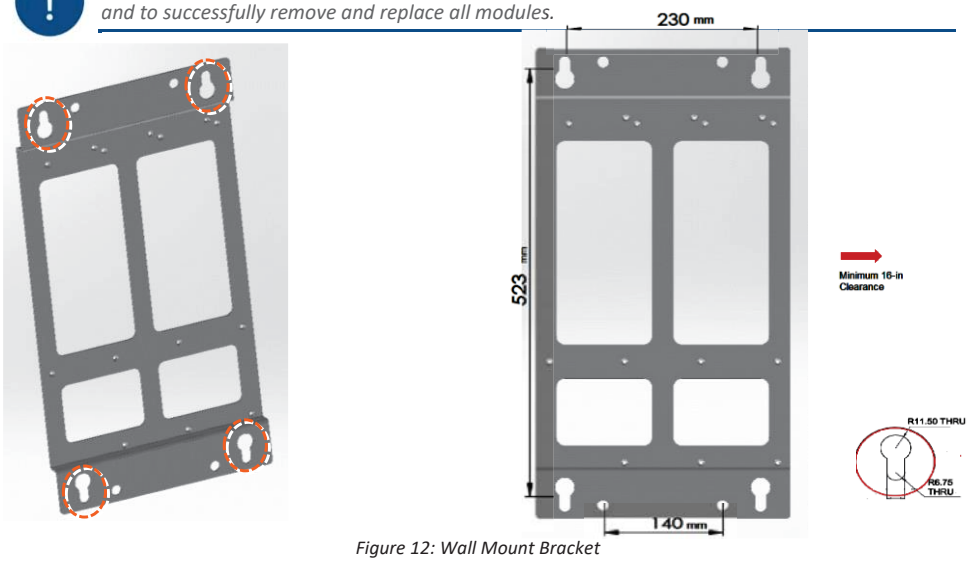

Figure 12: Wall Mount Bracket

2. Assemble the wall-mount bracket to MRU underside

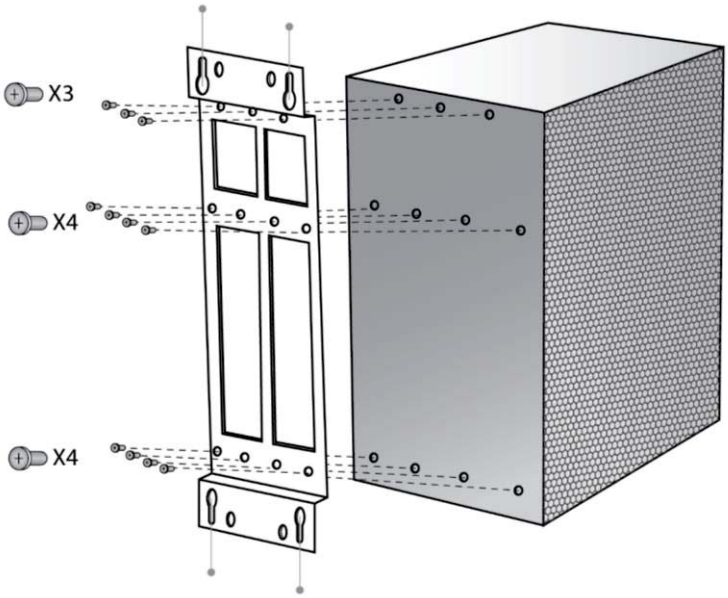

3. Insert anchors in wall, hang unit and tighten to secure

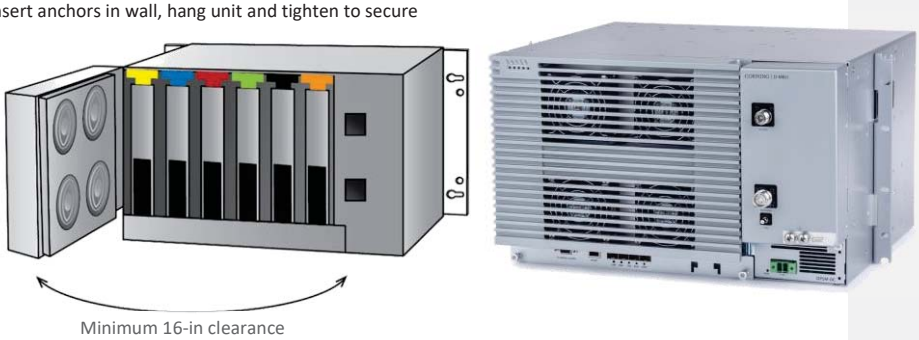

Figure 13. Example of MRU Chassis wall Installation

2.7.5 Ground MRU Chassis

The grounding connection is performed via a two-hole, standard barrel grounding lug located on the front of the MRU chassis.

➢ **Required tools and components**

The following additional (not supplied) tools and components are required for connecting the system ground:

- Grounding wire - grounding wire should be sized according to local and national installation requirements. The provided grounding lug supports 14 AWG to 10 AWG stranded copper (or 12 AWG to 10 AWG solid) wire conductors.

Note: The length of the grounding wire depends on the proximity of the switch to proper grounding facilities.

- Phillips-head screwdriver
- Crimping tool to crimp the grounding wire to the grounding lug.
- Wire-stripping tool to remove the insulation from the grounding wire

4. Use a wire-stripping tool to remove approximately 0.4 inch (10.9 mm) of the covering from the end of the grounding wire
5. Insert the stripped end of the grounding wire into the open end of the grounding lug
6. Crimp the grounding wire in the barrel of the grounding lug. Verify that the ground wire is securely attached to the ground lug by holding the ground lug and gently pulling on the ground wire
7. Prepare the other end of the grounding wire and connect it to an appropriate grounding point at the site to ensure adequate earth ground

Figure 14: MRU Grounding Lug

2.7.6 Connect Fiber SFP+

Note: use SFP+ from the approved list provided by Corning.

1. Remove the rubber stopper from the source port.
2. Push the SFP+ connector into the port, until it clicks (note that there is only one correct direction for plugging-in).
3. Remove the white plug-protectors from the end of the SFP+ cable.
4. Plug the SFP+ cable into the D-MRU port until it clicks.
5. connect the other edge of the cable to the source unit

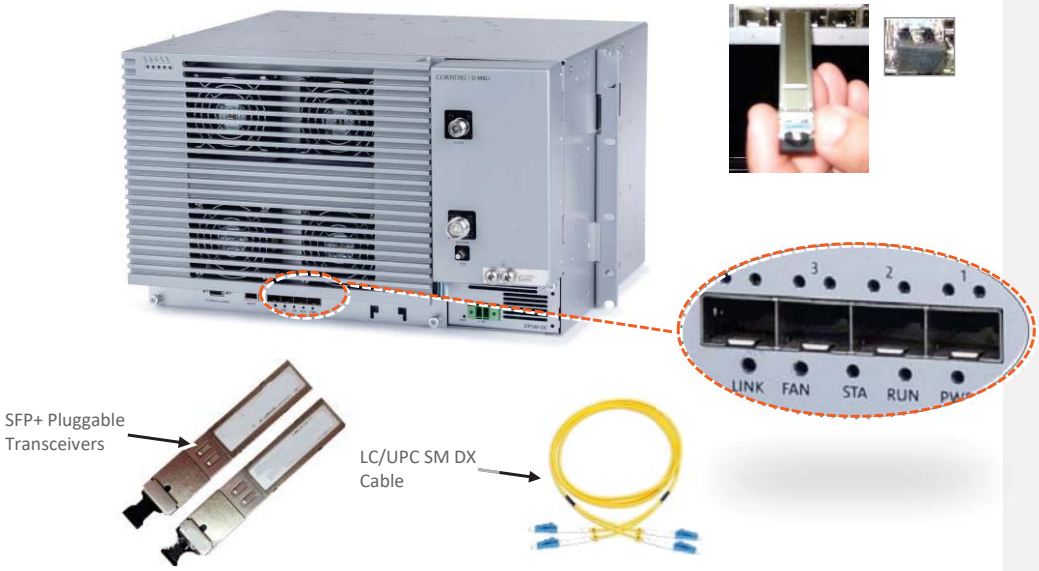

Figure 15 Remove rubber stopper from port and from SFP+ Pluggable Transceiver and insert the SFP+ Pluggable Transceivers (hot-pluggable optical transceiver module) into the port.

2.7.7 Connect Antenna

NOTE: The MRU has one output, that can be split via passive splitters.

1. Connect the MRU male 4.3-10 Type duplexed RF "ANTENNA" port to the broadband antenna(s) using appropriate coax cables.

Note: The test port is used for coupling; used for measuring the power without disconnecting the antenna.

2.7.8 External RF Source (3.5 GHz)

The MRU includes one N-Type Female RF port used for connecting to an external RF source, such as, a small cell or pico cell.

Note: This external RF cavity port is market specific and may not be applicable to certain markets For future CBRS/C-Band services at 3.5 GHz.

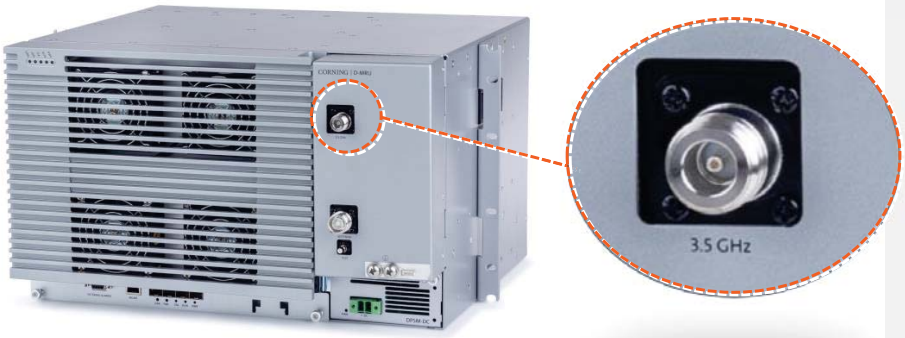

2.7.9 Connect Power & POWER UP

The MRU PSM is located on the bottom right of the chassis front. The PSM type (AC/DC) is model dependent.

- Refer to section 2.4.7.1 for AC models.
- Refer to section 2.4.7.2 for DC models

2.7.9.1 AC models

WARNING! Approved power cable – *the entire length of the power cable (or flexible cord) and the insulation must be intact. The cable must be firmly connected to both the electrical plug and the unit itself.*

Standard plug – *the use of a standard plug is mandatory. The use of a non-standard power plug can cause electrocution! Also, plugging a non-standard plug into a standard socket that does not correspond to the plugs' shape, can damage the socket making it a safety hazard*

AC Power Connection

Connect the MRU power connector to the AC power source using the provided AC power cable:

- Power input: 100-240 VAC/50-60 Hz
- Power consumption: 620 W (maximum)
- Maximum AC current consumption: 7 A

2.7.9.2 DC Models

DC model includes Class 1 terminal block connector:

- Power input: 36-60VDC
- Power consumption: 580W (maximum)
- Maximum DC current consumption: 16A

1. Open PSM captive screws and pull-out module from chassis.
2. Set DC input source type to “CLASS1” connector and secure PSM module back in place. See Figure 8.
3. Route DC pair from CLASS1 connector to local power source; Power input: 48 VDC (40-60 VDC) 15 A max

2.7.10Verify Normal Operation

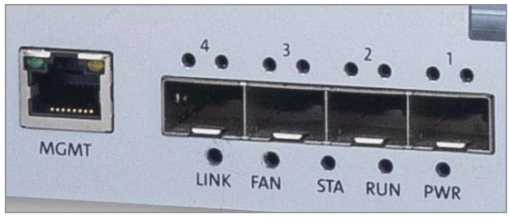

LEDs

1. Verify that fans are operational.
2. Refer to status LEDs on the top-left of the chassis door and on each PAM to confirm normal system operation according to the following table:

Table 7: MRU Chassis and DOPTM LEDs

LED Name	Status	Description	Color	State
Power	Power on	The dMRU was powered up	Green	Solid
Run	Run mode	The system is up and running	Green	Blinking (1Hz)
	Identify	Identify RU was activated	Green	Blinking (2Hz)
Status	System O.K.	System up and running	Green	Solid
	HW Failure/TDD Sync Loss	HW failure or sync loss in the TDD PAM occurred	Red	Solid
FAN	Fan working properly	Fan working properly	Green	Solid
	Minor problem in fan module	One or more fans exceed the expected fan velocity	Amber	Solid
	Major problem in fan module	One or more of the fans stopped working	Red	Solid
Link	Link O.K.	There is a connection to the head end equipment	Green	Solid
	Link is down	There is no connection to the head end equipment	-	Off

Table 8: PAM LEDs

LED Name	Status	Description	Color	State
Power/Status	PAM O.K.	Power exist and no alarms	Green	Solid
	HW Failure	There is any alarm in the PAM	Red	Solid
	TDD Sync acquiring	The TDD PAM is in process of final syncing on TDD pattern	Green	Blinking (1Hz)*
Run	Run mode	The system is up and running	Green	Blinking (1Hz)*

Table 9: SFP LEDs

Status	Description	LED State	
		Green	Amber
SFP Plug out	SFP Plug out	OFF	OFF
Optic Link Fail	1. Optic cable disconnected	OFF	ON
	2. SFP fail		
	2.1 SFP fault		
	2.2 SFP warning		
	2.3 SFP alarm		
	3. CPRI link down		
Optic Link Ok	1. Optic cable connected	ON	ON
	2. SFP ok		
	3. CPRI link down		
CPRI Link Ok	1. Optic cable connected	ON	OFF
	2. SFP ok		
	3. CPRI link up		

2.8 HRU Installation

dHRU comes in various formats, according to customer needs. An example is brought bellow:

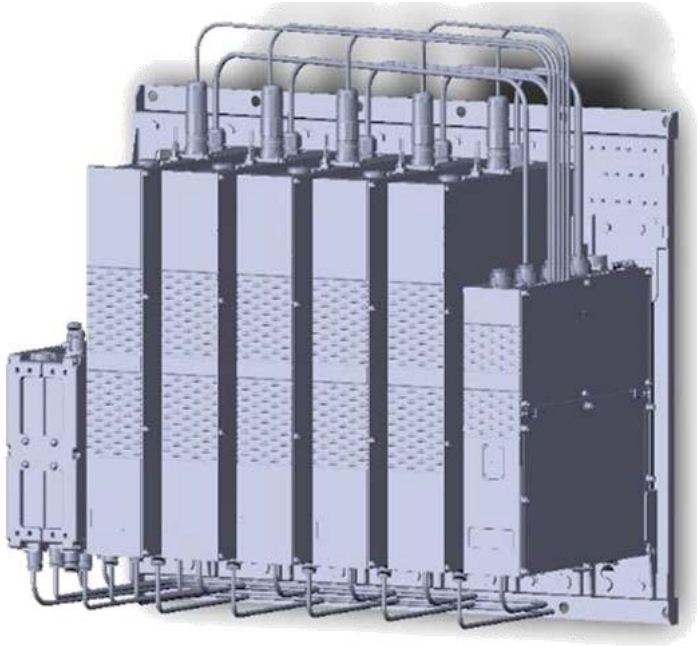

To install the dHRU, follow these steps:

1. Verify your box contents, according to the specific model ordered, see 2.8.1
2. Review the system elements and interfaces, see 2.8.2
3. Install the system, see 0

2.8.1 Verify Box Contents

2. Open the package and verify all elements are available according to the following table.

Notes:

** for details see APPENDIX B: Ordering information*
** See unpacking example underneeth the table.*

Table 10: dHRU Package Items List

Item Description		Flavor	PN	Image
dHRU-dHPOM		HRU Digital High Power Optical Module		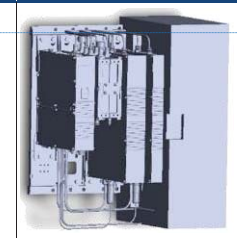 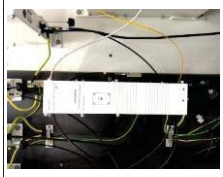
dHRU-dHPAM-6		HRU Digital High Power Amplifier Module supporting 600		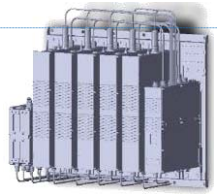
dHRU-dHPAM-7		HRU Digital High Power Amplifier Module supporting 700		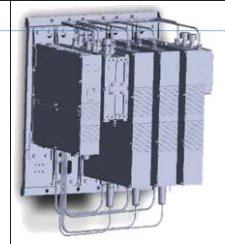
dHRU-dHPAM-85		HRU Digital High Power Amplifier Module supporting 800/850		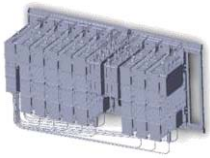

Commented [RR2]: OEU

Commented [RR3]: לשים אחד מהאחרים ולשים בכולם

Commented [RR4]: גונדילה יותר מהאחרים (האמצעי בצילום מספר 7)

Item Description		Flavor	PN	Image
dHRU-dHPAM-19		HRU Digital High Power Amplifier Module supporting PCS		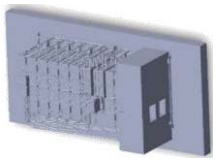
dHRU-dHPAM-17		HRU Digital High Power Amplifier Module supporting AWS		
dHRU-dHPAM-23		HRU Digital High Power Amplifier Module supporting WCS		
dHRU-dHPAM-25		HRU Digital High Power Amplifier Module supporting TDD 2500, 100MHz contiguous BW		
dHRU-COMB-L		HRU combiner module supporting low bands 600,700,800/850 including cables		
dHRU-COMB-M		HRU combiner module supporting low bands AWS,PCS,WCS and TDD 2500 including cables		
dHRU-TL		HRU termination load		
BR-dHRU-L		HRU bracket to support low band modules		
BR-dHRU-M		HRU bracket to support mid band modules		
dHRU-CABLE		HRU 4.3-10 RF Jumper Cable		
dHRU-INT-SFP		HRU Internal SFPs (from dHRU-dHPOM to modules) and Fiber		

2.8.2 dHRU Interfaces, Connections, Dimensions

This section details the interfaces of the system sub-elements, as well as the fully connected system internal and external interfaces:

- OEU interfaces, see 2.8.2.1
- RFU interfaces, see 2.8.2.2
- Fully connected system interfaces, see 2.8.2.3
- System connection architecture, see 2.8.2.4

2.8.2.1 OEU interfaces

➢ **Top panel**

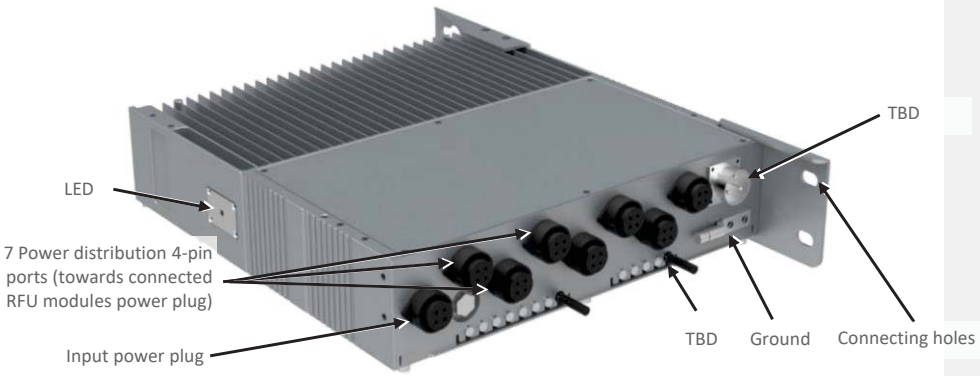

➢ **Bottom panel**

Commented [RR5]: לתקן את הכיתוב

- **OEU Dimensions**

Dimensions, H x W x D		mm	370 x 80 x 355
Weight (approx.)		kg	12
Power Supply		VAC	AC100-240/50-60Hz
Power Consumption (approx.)		W	50
Fiber Connectors			LC/PC
Interfaces	SFP 1-4		Optical port to DRU
	SFP 4-8		Optical port for OEU daisy chain
	SFP8~SFP16		Optical port to RFU
	Power		To RFU1~8 power supply

2.8.2.2 RFU Interfaces

- **Bottom Panel**

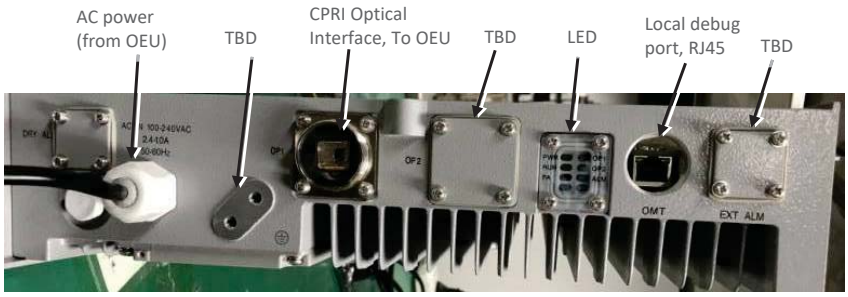

- **Top Panel**

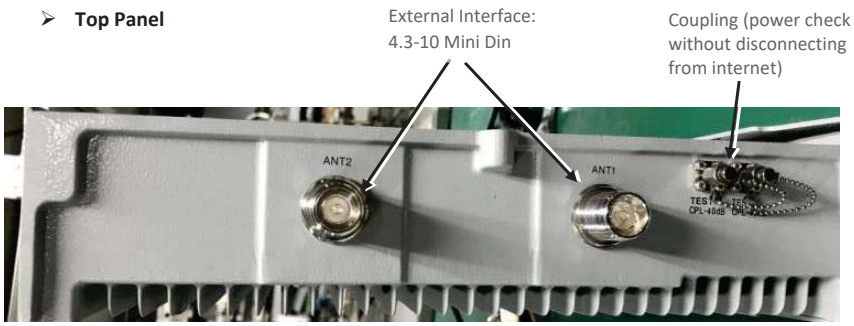

- **Mechanical dimensions**

Dimensions, H x W x D	mm	500 x 80 x 355 (per RFU)；500 x 121 x 355（700L+700U）
Weight (approx.)	kg	18 (per RFU); 20（700L+700U RFU）
Power Supply	VAC	AC100-240/50-60Hz
Power Consumption (approx.)	W	220 (per band)
RF Connectors		4.3-10, duplex per band
Fiber Connectors		LC/PC
Operating Temperature	°C	-40 to +55

2.8.2.3 Full System Interfaces

The system includes two combiners and several band modules.

Note: There are labels on the combiners, indicating the RFU band names, to which they connect (two of each, as this is MIMO)

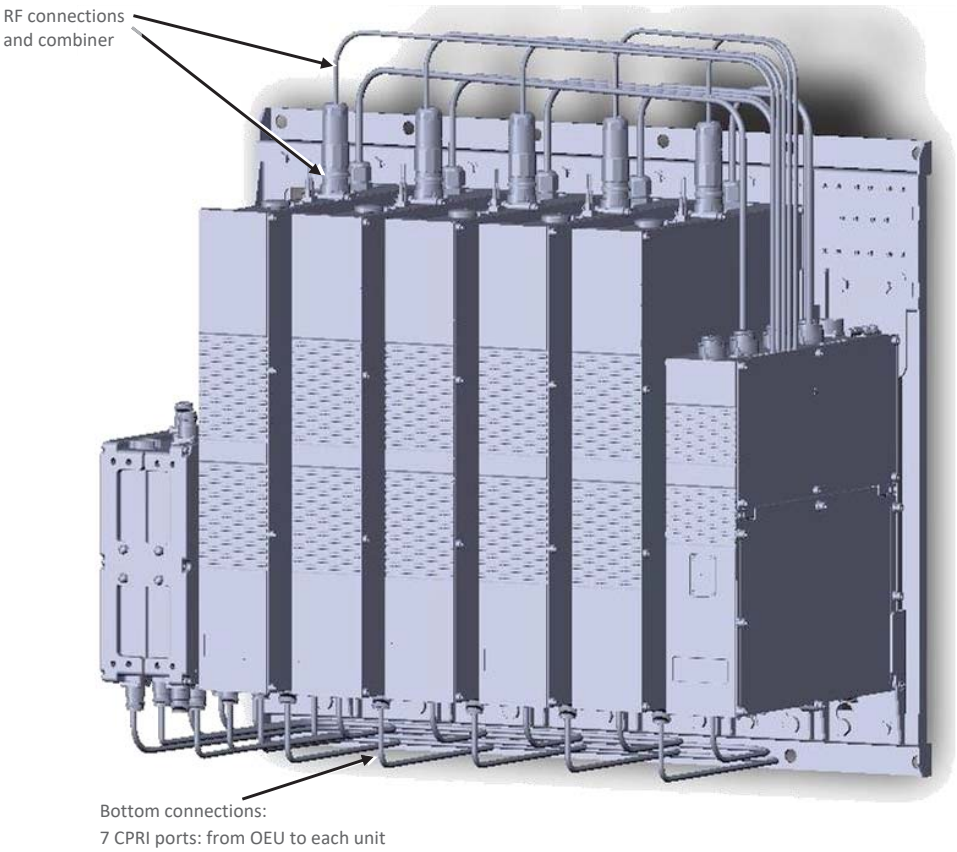

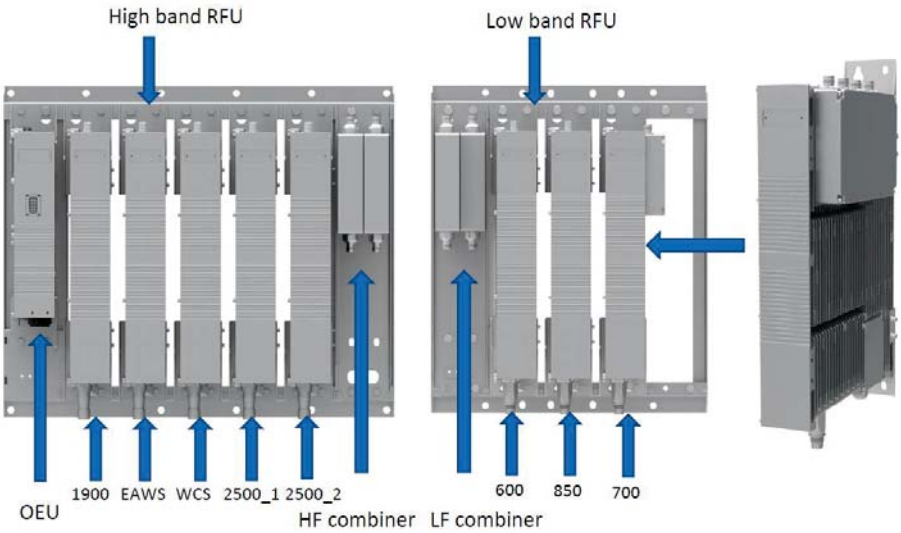
High band RFU
Low band RFU
OEU
1900
EAWS
WCS
2500_1
2500_2
HF combiner
600
850
700
LF combiner

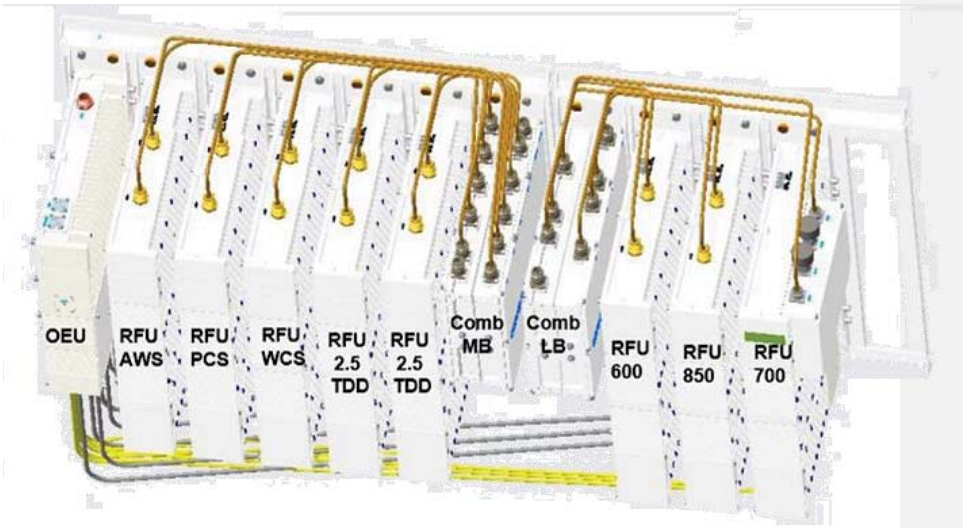
OEU
RFU AWS
RFU PCS
RFU WCS
RFU 2.5 TDD
RFU 2.5 TDD
Comb MB
Comb LB
RFU 600
RFU 850
RFU 700

2.8.2.4 System Connection Architecture

Note: all internal connectors from OEUs to RFUs are provided. All external SFPs (OEUs to DRU) are purchased seperately.

The following figure indicates the system internal and external interfaces.

The system includes two combiners:

1) **Low band**: Ports for: 600, 700, 850 + a port that that receives the combined RF signal from the mid-band combiner (entry coming from the Mid-band)

2) **Mid band**: Ports: sums all bands – 1 port per band (except TDD).

For TDD: 2 entry ports (2500_1, 2500_2) – to sum 2 modules. The output is bridged towards the 2500_IN entry through an external jumper (marked in RED in the above figure; provided).

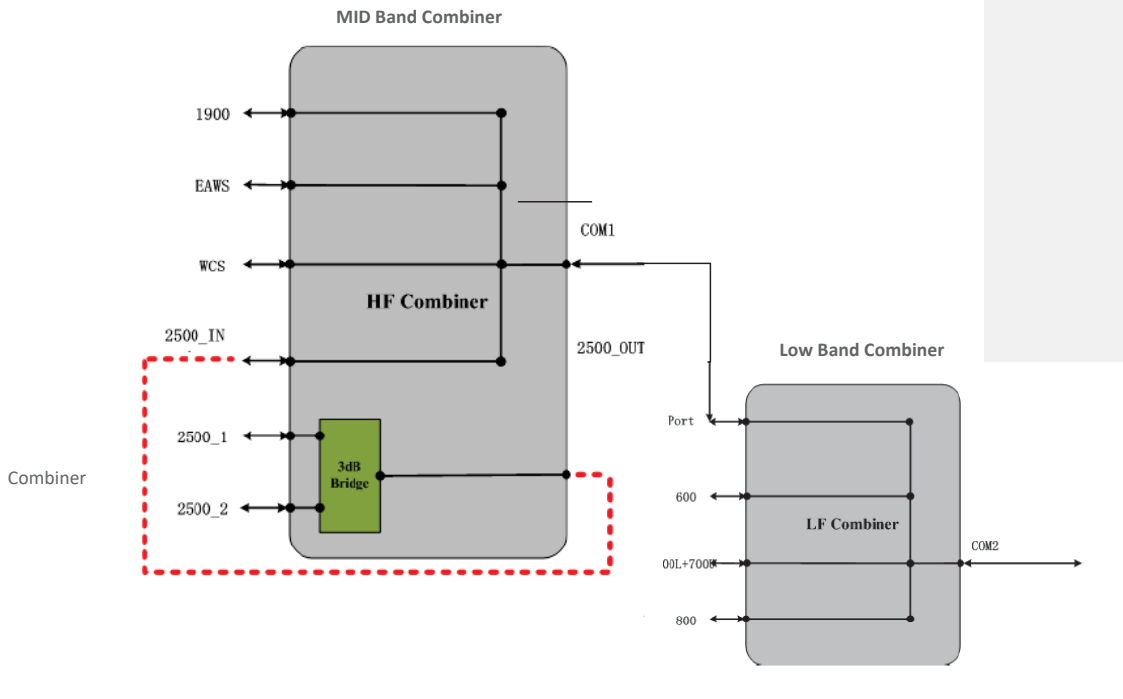

2.8.3 Installation steps Overview

1) Mount the system , see 2.8.3.1
2) Connect the internal cables (CPRIs, RFs), see 2.8.3.2
3) Connect external cables (OEUs to DRUs) see 2.8.3.3
4) Connect the other cables (ground, power), see 2.8.3.4
5) Power up and verify normal operation, see 0

2.8.3.1 Mount chassis on the wall

Note: for dimensions and specifications refer to chapter 8

Mount each of the two brackets (Low and Mid) on the wall, and connect the modules to the bracket using screws as follows:

1. Before mounting the dHRU: unwrap each of the elements.
2. Determine the location of the dHRU on the wall, while considering accessibility
3. Connect the mounting bracket to the wall, using M10x110 screws:

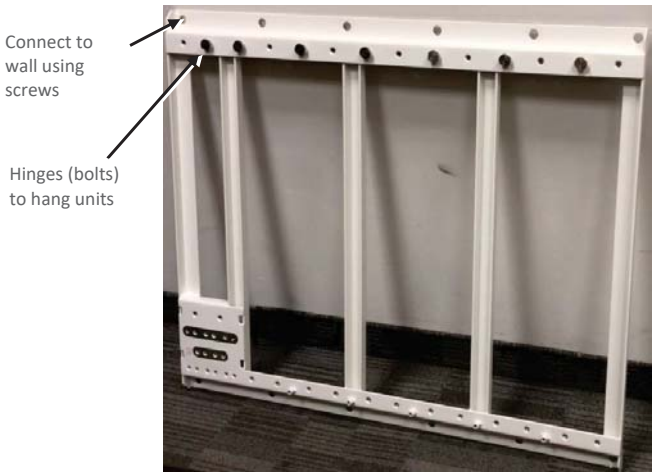
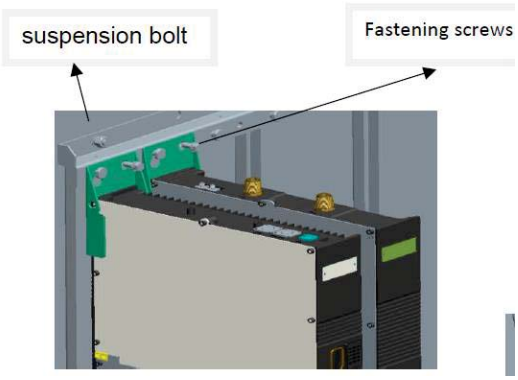
4. Connect each of the modules to its dedicated position, according to the labels on the bracket:
   - Hang the unit on the hinge
   - using two screws M8X16