CORNING

Everon™ 6000 G2 v1.1

User Manual

Preface Material

About this Manual

This manual describes how to install, use, configure and manage the Corning® Everon™ 6000 G2 platform. It includes a description of the first and ongoing end-to-end configuration, management, and maintenance of the system.

Intended Users and Scope

This manual is applicable to Corning system installation personnel, technicians, and users. It is assumed that the user is familiar with the system and its units and understands the basic functionality of the system.

Contacting Technical Support Help Desk

Corning technical support contact information:

Email: onesupport@corning.com

Tel: +(1) 833 4CORNING (833-426-7646)

Legal Notice

Copyright

Disclaimer

Conventions

Important information is highlighted in a frame as follows:

Warning: Actions requiring special attention to avoid serious physical injury; for example, pay attention when working with high voltage components.

Caution: Actions requiring special attention to avoid possible damage to device.

Note: Tips and suggestions for efficient work

Warranties

Hardware Warranty

Corning Optical Communications, LLC (“Corning”) warrants to the original purchaser (“Customer”) that for a period of one (1) year from the date of shipment of the Hardware, unless otherwise agreed in writing by Corning (the “Hardware Warranty Period”), the Hardware furnished by Corning shall conform in all material respects with, and perform the functions set forth in, the Specifications, as defined below (the “Hardware Warranty”). If notified by Customer of any nonconformity with applicable portions of the Specifications within the Hardware Warranty Period, Corning shall promptly, at its own election and expense, repair or replace the affected Hardware with a product having equivalent functionality as such nonconforming Hardware under the terms of this Hardware Warranty. Such repair or replacement shall be Customer’s sole remedy and Corning’s sole obligation in the event this Hardware Warranty is invoked. If the Hardware or any components comprising a part of the Hardware are replaced or repaired during the Hardware Warranty Period, the Hardware Warranty Period for such repaired or replaced Hardware shall extend to the longer of (i) the balance of the Hardware Warranty Period or (ii) three (3) months from the date of repair or replacement. For purposes of this Warranty, “Specifications” shall mean the specifications and performance standards of the Hardware as set forth in documents formally published by Corning and delivered to Customer which contain technical specifications for the Hardware. If Customer invokes this Hardware Warranty, it shall notify Corning promptly of the claimed defect. Customer will allow Corning to inspect the Hardware at Customer’s location or shall return the Hardware to Corning’s closest repair facility, at Corning’s option. For Hardware returned to Corning’s repair facility, Customer shall be responsible for payment of all transportation and freight costs (including insurance) to Corning’s repair facility, and Corning shall be responsible for all transportation and freight costs (including insurance) incurred in connection with the shipment of such Hardware to other repair facilities of Corning and/or its return to Customer. FOB point shall be the point of origin in either case. Notwithstanding the foregoing, in no event will Corning be liable for damage to Products resulting from improper handling during or after shipment, misuse, neglect, improper installation, operation or repair (other than by authorized Corning personnel), alteration, accident, or for any other cause not attributable to nonconformance to the Specifications on the part of Corning. Corning shall not reimburse or make any allowance to Customer for any labor charges incurred by Customer for replacement or repair of any goods unless such charges are authorized in advance in writing by Corning.

Software Warranty

Corning warrants to Customer that, for a period of one (1) year from the date of shipment of the original Software, unless otherwise agreed in writing by Corning (the “Software Warranty Period”), the Software shall conform in all material respects with the Specifications (the “Software Warranty”). In the event the Software is proven to fail to conform to the Specification during the Software Warranty Period, Corning shall correct such failure and ensure that the Software conforms with the Specifications. Customer will allow Corning to inspect the operation of the Software at Customer’s location or will provide remote access for Corning staff. Notwithstanding the foregoing, Corning shall have no obligation under the Software Warranty if the Software is modified or used with hardware or software not supplied or approved by Corning or if the Software is subject to, improper installation, application, or operation. Third-party software distributed with the Software may carry certain warranties which, to the maximum extent allowed by law, Corning hereby assigns, transfers, and otherwise conveys to Customer, provided, however, that Corning itself provides no warranty of any kind, express, implied, statutory or otherwise, for any third-party software provided hereunder. Corning does not warrant any hardware, software or services not provided by Corning.

THIS WARRANTY IS THE ONLY WARRANTY MADE BY CORNING AND IS IN LIEU OF ALL OTHER WARRANTIES, EXPRESS OR IMPLIED INCLUDING, BUT NOT LIMITED TO, THE IMPLIED WARRANTIES OF MERCHANTABILITY OR FITNESS FOR A PARTICULAR PURPOSE, QUIET ENJOYMENT, THE OPERATION OF THE HARDWARE OR SOFTWARE WILL BE UNINTERRUPTED OR ERROR FREE, NONINFRINGEMENT OR ANY EXPRESS OR IMPLIED WARRANTY ARISING OUT OF TRADE USAGE OR OUT OF COURSE OF DEALING OR COURSE OF PERFORMANCE. CORNING SHALL NOT BE LIABLE FOR ANY OTHER DAMAGE INCLUDING, BUT NOT LIMITED TO, INDIRECT, SPECIAL OR CONSEQUENTIAL DAMAGES ARISING OUT OF OR IN CONNECTION WITH FURNISHING OF HARDWARE, SOFTWARE, PARTS, AND SERVICE HEREUNDER, OR THE PERFORMANCE, USE OF, OR INABILITY TO USE THE HARDWARE, SOFTWARE, PARTS AND SERVICE. CORNING SALES AGENTS OR REPRESENTATIVES ARE NOT AUTHORIZED TO MAKE COMMITMENTS ON WARRANTY RETURNS

Returns

In the event it is necessary to return any Hardware for a warranty claim, the following procedure shall be followed:

1. Customer must receive a return authorization from Corning prior to returning any Hardware unit. Customer shall advise Corning of the model, serial number, original ship date, and claimed discrepancy. Hardware may then be forwarded to Corning, transportation prepaid. Any Hardware returned collect or without authorization may not be accepted. Returned Hardware must be packaged to protect it against physical or ESD (static) damage, using original packaging whenever possible. Damage incurred during return shipping is not covered by warranty.

2. Prior to repair, Corning will advise Customer of the any test results. If the issue with the Hardware is covered by the warranty, Corning shall either repair or replace the Hardware. Corning may use refurbished Hardware to satisfy a warranty claim. Repaired Hardware is warranted for the longer of (i) the balance of the Hardware Warranty Period or (ii) three (3) months from the date of repair or replacement.

3. If Corning determines that the Hardware is meeting the Specification (no fault found), Corning shall so notify Customer and shall return the Hardware to Customer at Customer's expense.

4. If Corning determines that the problem with the Hardware is as a result of a Customer-caused problem or out-of-warranty condition, Corning shall so notify Customer. If Corning provides out of warranty repair, Corning shall advise Customer of the charges to repair or replace the Hardware. Should Customer decline out-of-warranty repairs, Customer may opt to have Corning scrap the materials via an accredited recycling vendor at Customer's expense or Corning shall return the Hardware to Customer at Customer's expense

Reporting Defects

The units were inspected before shipment and found to be free of mechanical and electrical defects. Examine the units for any damage that may have been caused in transit. If damage is discovered, file a claim with the freight carrier immediately. Notify Corning as soon as possible in writing.

Note: Keep all packing material until you have completed the inspection.

Warnings and Admonishments

There may be situations, particularly for workplace environments near high-powered RF sources, where recommended limits for safe exposure of human beings to RF energy could be exceeded. In such cases, restrictive measures or actions may be necessary to ensure the safe use of RF energy.

The device has been designed and constructed to prevent, as far as reasonably, practicable danger. Any work activity on or near device involving installation, operation or maintenance must be, as far as reasonably, free from danger.

Where there is a risk of damage to electrical systems involving adverse weather, extreme temperatures, wet, corrosive or dirty conditions, flammable or explosive atmospheres, the system must be suitably installed to prevent danger.

Device provided for the purpose of protecting individuals from electrical risk must be suitable for the purpose and properly maintained and used. This covers a range of activities including lifting, lowering, pushing, pulling, carrying, moving, holding or restraining an object, animal or person from the equipment. It also covers activities that require the use of force or effort, such as pulling a lever, or operating power tools.

Where some of the abovementioned activities are required, the device must be handled with care to avoid being damaged.

Observe standard precautions for handling ESD-sensitive devices. Assume that all solid-state electronic devices are ESD-sensitive. Ensure the use of a grounded wrist strap or equivalent while working with ESD-sensitive devices. Transport, store, and handle ESD-sensitive devices in static-safe environments.

⚠WARNINGS!

According to the device type:

For DLRU-678, dHRU-dHPAM-7, dHRU-dHPAM-85, DMRU-G2-678:

WARNING: THIS IS A 90.219 CLASS B DEVICE. This is NOT a CONSUMER device. It is designed for installation by FCC LICENSEES and QUALIFIED INSTALLERS. You MUST have an FCC LICENSE or express consent of an FCC License to operate this device. You MUST register Part 90 Class B signal booster (as defined in 47 CFR 90.219) online at www.fcc.gov/signal-boosters/registration. Unauthorized use may result in significant forfeiture penalties, including penalties, including penalties in excess of $100,000 for each continuing violation.

For DLRU-G2-17192325, DLRU-G2-25, DLRU-G2-35, dHRU-dHPAM-6, dHRU-dHPAM-17, dHRU-dHPAM-19, dHRU-dHPAM-23, dHRU-dHPAM-25, DMRU-G2-678, DMRU-G2-1719, DMRU-G2-2325, DMRU-G2-25, DMRU-35:

WARNING: This is NOT a CONSUMER device. It is designed for installation by FCC LICENSEES and QUALIFIED INSTALLERS. You MUST have an FCC LICENSE or express consent of an FCC License to operate this device. Unauthorized use may result in significant forfeiture penalties, including penalties in excess of $100,000 for each continuing violation.

For all devices:

Warning info: Preclude indications that the device supports home/personal use

For dMRU and dHRU:

For pluggable equipment, the electrical outlet shall be easily accessible.

The product shall have connection of the device protective earthing conductor to the installation protective earthing conductor (for example, by means of a power cord connected to an electrical outlet with

RF Safety

To comply with FCC RF exposure compliance requirement, adhere to the following warnings:

Warning! Antennas used for this product must be fixed mounted on indoor permanent structures, providing a separation distance of at least 197 and above cm from all persons during normal operation.

Warning! Each individual antenna used for this transmitter must be installed to provide a minimum separation distance of 50 cm or more from all persons and must not be co-located with any other antenna for meeting RF exposure requirements.

Warning! Antenna gain should not exceed 10 dBi.

Warning! The design of the antenna installation needs to be implemented in such a way to ensure RF radiation safety levels and non-environmental pollution during operation.

Compliance with RF Safety Requirements:

CAUTION! Use of controls, adjustments, or performance of procedures other than those specified herein may result in hazardous radiation exposure.

Power Requirements for DC Inputs

Warning! Only use a special DC supply cable with connector

Warning! Always keep DC IN connectors connected during the product operation

Warning! Disconnect all power from the device by means of an external circuit breaker before connecting or disconnecting the DC IN connectors.

Frequency Bands

Frequency Range Name	Uplink	Downlink
600-band 71	663-698 MHz	617-652 MHz
700L (Lower Band)- band 12	698-716 MHz	728-746 MHz
700U (Upper Band)-band 13	776-787 MHz	746-757 MHz
FirstNet (700)-band 14	788-798 MHz	758-768 MHz
800/850 -band 26	817-849 MHz	862-894 MHz
1900 (PCS)-band 25	1850-1915 MHz	1930-2020 MHz
EAWS-band 66	1695-1780 MHz	2110-2200 MHz
WCS-band 30	2305-2315 MHz	2350-2360 MHz
2500-band 41	2496-2690 MHz (TDD)	
3500-band 77	3450-3980 MHz (TDD)	

Compliance with RF Safety Requirements:

Warning! Only use provided AC/DC supply cable with connector

Warning! Always keep AC/DC IN connectors connected during the product operation

Licensee Contact Information

Industrial Boosters may only be used by FCC licenses or those given express (individualized) consent of license. Corning Optical Communications Wireless certifies all the VARs listed as licensed installers for Corning. For the list of licensed VARs, please contact the Technical Support Team at:

onesupport@corning.com or + (1) 833 4CORNING (833-426-7646)

Revision History

Revision	Date	Created by	Reviewed by	Changes

Contents

1. Introduction 10
1.1 Key Features and Capabilities 10
1.2 Terminology, Acronyms, and Abbreviations 11
1.3 Corning® Everon™ 6000 G2 Architecture Overview 13
1.4 Internal Sub-units 13
1.4.1 RIU 13
1.4.3 DCU 17
1.4.4 DEU 21
1.4.5 Remote Units 25
1.4.6 System topology and gain assignment 29
2. System Installation 30
2.1 Headend Units – Architecture Example 32
2.2 RIU Installation 32
2.2.1 Verify Box Contents 33
2.2.2 Mount the RIU 34
2.2.3 RIU Cable Connection 35
2.3 DCU Installation 35
2.3.1 Verify Box Contents 36
2.3.2 Mount the DCU 37
2.3.3 DCU Cable Connection 38
2.4 DEU Installation 38
2.4.1 Verify Box Contents 39
2.4.2 Mount the DEU 40
2.4.3 DEU Cable Connection 41
2.5 dLRU Installation 42
2.5.1 Verify box Contents 42
2.5.2 Mount the dLRU 43
2.5.3 Power+ SPF+ Cable 52
2.5.4 Connect the Ground and Antenna Cables 54
2.5.5 Combiner cables 55
2.5.6 Verify normal operation 56
2.6 DMRU Installation 57
2.6.1 Verify box Contents 57
2.6.2 DMRU Dimensions 59
2.6.3 DMRU Interfaces 61

2.6.4 Cables Connection 61
2.6.5 Power 61
2.6.6 SFP+ Cables 62
2.6.7 Fan module (optional) 63
2.6.8 Mount the DMRU 64
2.6.9 Connect the rest of the Cables 65
2.6.10 Ground 65
2.6.11 Antenna 66
2.6.12 Verify normal operation 66
3. GUI – General Description 68
3.1 Screen Layout 68
3.2 Function Options 69
3.3 Supported Access Options 69
4. Session Access and first-time settings 70
4.1 Commission a Local Session 70
5. Commissioning 73
5.1 RIU Config 77
5.1.1 RIU WEB overview 77
5.1.2 RIU Parameter Config 78
5.2 DCU Config 80
5.2.1 DCU -> Dashboard 80
5.2.2 DCU -> RIU 87
5.2.3 DCU -> Function 87
5.2.4 DCU -> User Info 94
5.2.5 Program 97
5.3 DEU Config 93
5.3.1 DEU -> Dashboard 94
5.3.2 DEU -> Function 111
5.3.3 DEU -> User Info 118
5.4 dMRU Config 124
5.4.1 RU -> Overview &Alarm 124
5.4.2 RU Parameter config 126
5.5 Downlink/Uplink Config 133
5.5.1 Downlink Output Power Config (Power Sharing Process) 133
5.5.2 Uplink Gain Config 134
6. APPENDIX: LED Functionality and Color Definition 138

1. Introduction

Corning® Everon™ 6000 G2 is an advanced cellular service solution for small, medium, and large size venues, supporting a broad range of cellular generations, including 3G, 4G, and 5G.

Everon 6000 G2 is based on venues, advanced digital transport and processing, and channelized implementation, enabling efficient utilization of digital links. It is designed to support multi-band, multi-technology, and multi-operator networks through the single fiber-based infrastructure.

Everon 6000 G2 is a high bandwidth distribution architecture that provides preparedness for future radio technologies, broader spectrum, and new frequency bands. Due to its modular design and configuration flexibility, this solution is highly scalable in terms of supported capacity (number of sectors, frequency bands, channels) and remote units (coverage), and can be easily configured to support a large variety of deployment scenarios including single and multi-building ("campus") network topologies.

This solution offers multiple types of digital remote units, supporting a variety of frequency band combinations, with different power levels ranging from 20 dBm per band to 40 dBm per band. Advanced network configuration and management capabilities enable on-site and remote end-to-end configuration, system diagnostics, maintenance, and support network operations center (NOC) connectivity.

1.1 Key Features and Capabilities

- **Comprehensive service support** - 600 MHz, 700 MHz, FirstNet, 800/850 MHz, 1900 MHz (PCS), 2100 MHz (EAWS), 2300 MHz (WCS), 2500 MHz (TDD), 3500 MHz (TDD). Supports MIMO services, FDD and TDD. Supports 3G, 4G, and 5G technologies.
- **Multi-X system** - Supports multi-operator, multi-band, multi-technology services through a single infrastructure. Supports single and multi-building ("campus") network solutions.
- **Highly modular/highly scalable** - Can be easily expanded to support additional capacity sectors, frequency bands, channels, and coverage areas, by increasing the number of remotes.
- **Advanced digital signal processing** - Provides higher dynamic range, enables per-channel granularity, delivers enhanced overall power efficiency, and improves overall system performance.
- **Digital CPRI-based transport** - Provides robust signal distribution with flexible scalability.
- **Digital Service and capacity routing** - Enables advanced capacity and coverage management through flexible routing configuration management.
- **Carrier-grade network management** - Network configuration and management capabilities enable on-site and remote end-to-end configuration, system diagnostics, maintenance, support management and control by network management system.

1.2 Terminology, Acronyms, and Abbreviations

Terminology/Acronyms/Abbreviations

Abbreviation	Full Name
RIU	Radio Interface Unit
DCU	Digital Conversion Unit
DEU	Distributed Extension Unit
dLRU	Digital Low-Power Remote Unit
DMRU	Digital Medium-Power Remote Unit
NOC	Network Operation Center
SMV	Small Medium Venues
CPRI	Common Public Radio Interface
DSP	Digital Signal Processing
EARFCN	E-UTRA Absolute Radio Frequency Channel Number
EPC	Evolved Packet Core
EUTRA	Evolved Universal Terrestrial Radio Access
EUTRAN	Evolved Universal Terrestrial Radio Access Network
FPGA	Field Programmable Gate Array
GE / GigE	Gigabit Ethernet
GPS	Global Positioning System
LTE	Long-Term Evolution
MNO	Mobile Network Operator
PLMN	Public Land Mobile Network
RF	Radio Frequency
SNMP	Simple Network Management Protocol
TCP	Transmission Control Protocol
UDP	User Datagram Protocol
UE	User Equipment
UL	Uplink
UTRAN	Universal Terrestrial Radio Access Network
UDP	User Datagram Protocol

Images

Abbreviation	Image
RIU	
DCU	
DEU	
dLRU	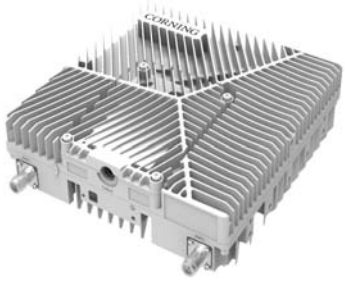
DMRU	

1.3 Corning® Everon™ 6000 G2 Architecture Overview

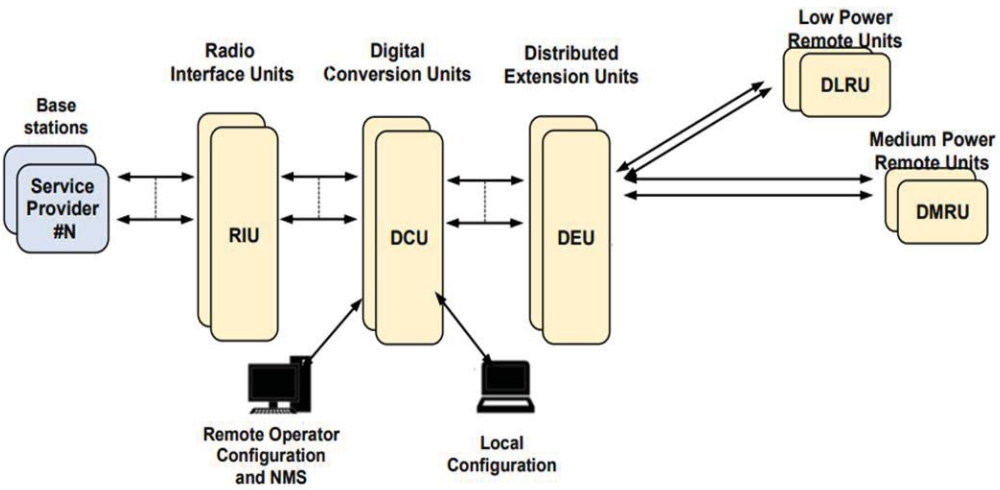

Figure 1. Architecture diagram

Everon 6000 G2 features a fully advanced digital system, which incorporates the RIU (Radio Interface Unit), DCU (Digital Conversion Unit), DEU (Distributed Extension Unit) and multiple types of remotes. All the devices in the system are managed via a web session to the DCU, which provides local and remote management capabilities for all connected system devices using both web GUI (HTTPs) and SNMP interfaces.

1.4 Internal Sub-units

1.4.1 RIU

Figure 2. RIU image

The Radio Interface Unit (RIU) is a frequency band specific unit. The RIU provides an interface and signal conditioning to signals coupled between the base station RF antenna ports and the DCU. The RIU interfaces up to 8 RF duplexed ports to the base station, and up to 8 simplex ports to the Digital Conversion Unit (DCU) with the following functions:

- Signal combination: The RIU combines different base station signals into one wideband signal, the combination matrix of which is software-controllable, listed in Figures 3 through 5.
- Downlink/Uplink attenuation: With an embedded fixed attenuator with 30dB in downlink and 40dB in uplink, the RIU bears up to 37dBm average input power (with PARP no more than 10dB).
- Gain control: In addition to the fixed attenuator, the RIU includes an internal digital attenuator controlling the gain between the input and output in the range of 0-25dB.

Device management: Remote control and monitor of RIU is available on the DCU via the 2xRJ45. connections. In the case of multiple RIU applications, the management can be achieved with a cascading topology, shown in Figure 6. Figures 7-8 show the RIU interfaces. Table 1 lists the interfaces' descriptions.

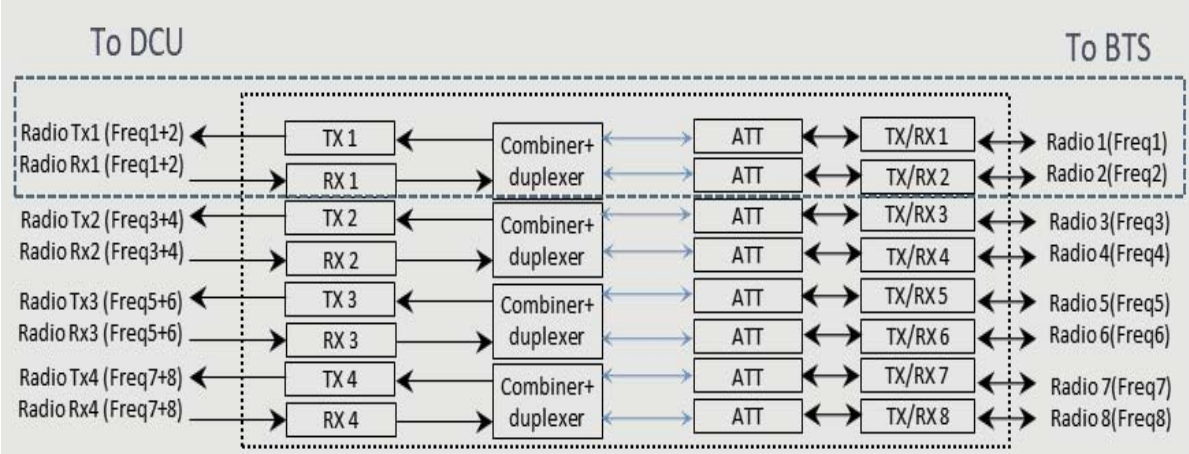

Figure 3. 2 TO 1 Matrix

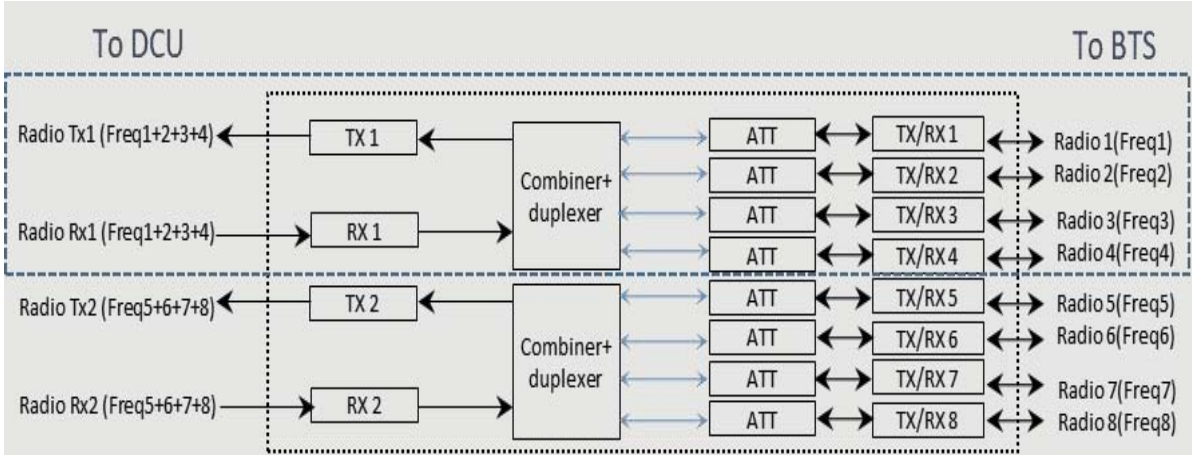

Figure 4. 4 TO 1 Matrix

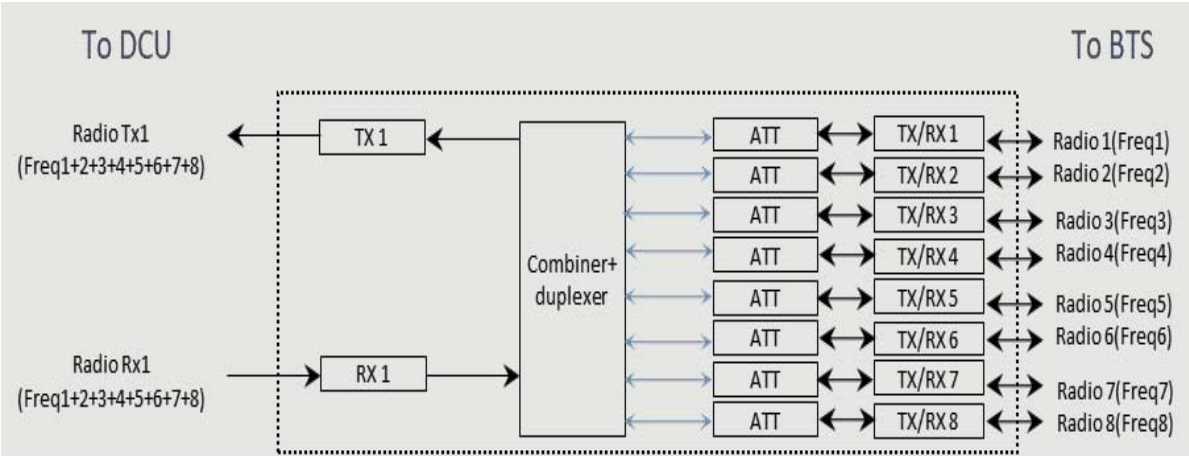

Figure 5. 8 TO 1 Matrix

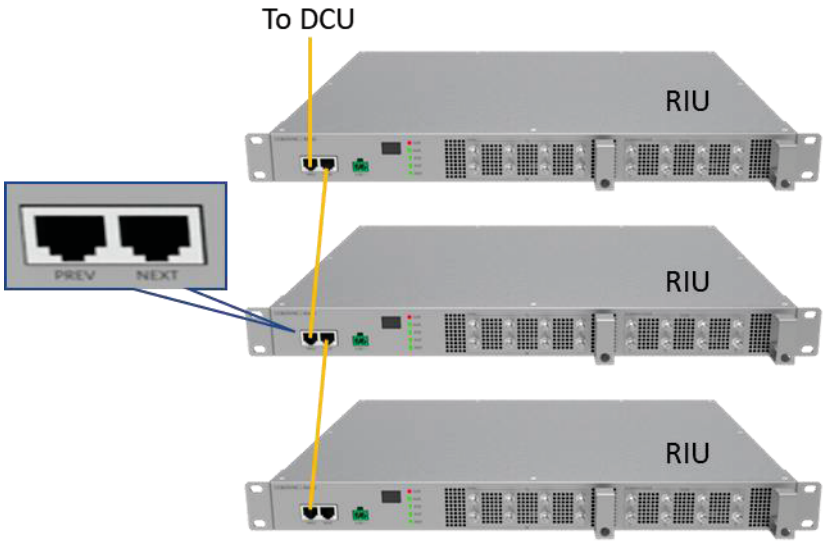

Figure 6. RIU Monitoring Diagram

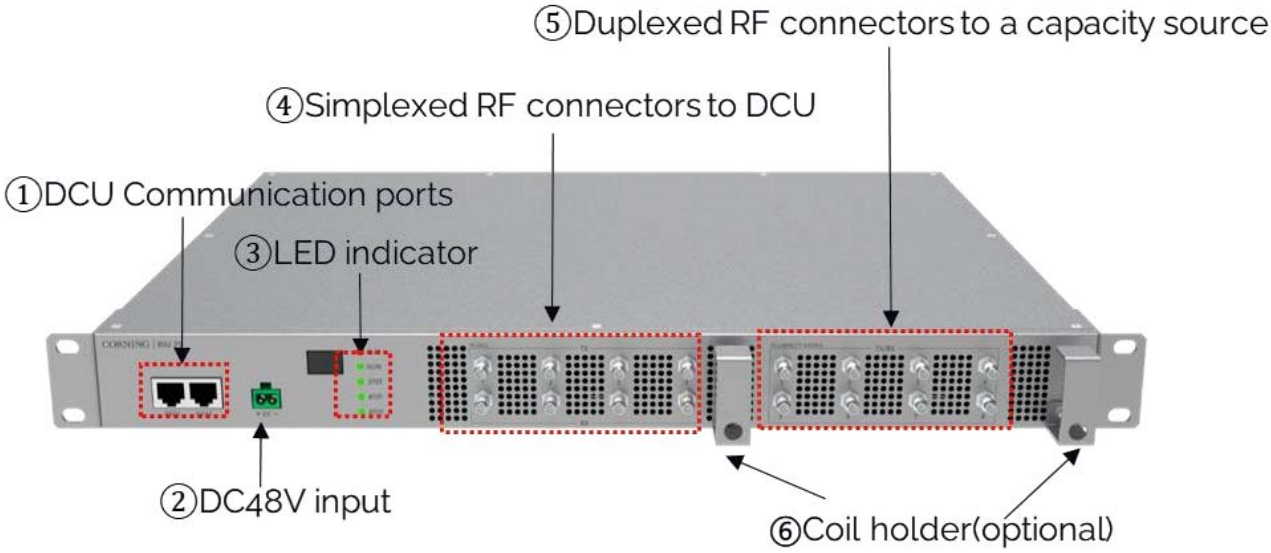

Figure 7. RIU Interface (front view)

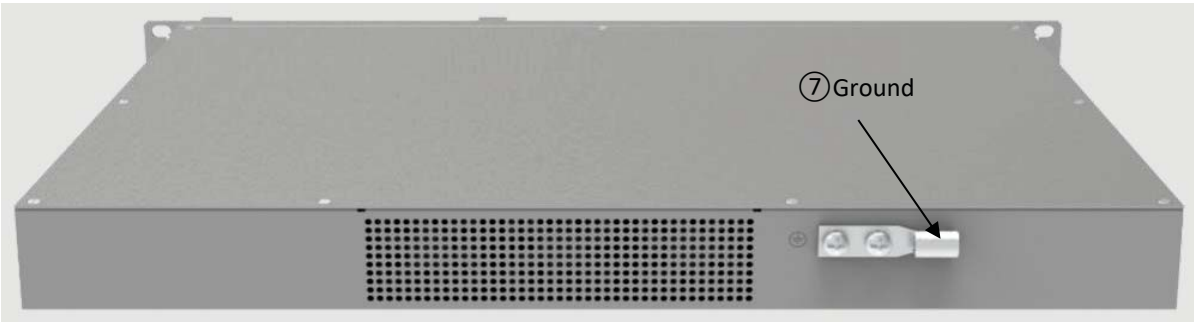

Figure 8. RIU Interface (back view)

Table 1. RIU Interfaces

SN	Interface	Interface Type	Silk Screen	Description
1	DCU communication port	RJ45 x 2	PREV NEXT	PREV: Upper cascade port to DCU or upper level RIU NEXT: Lower cascade port to other RIU
2	DC input	Phoenix connector x 1	DC_IN	48V DC
3	LED indicator	LED x 2	ALM RUN	Please check the "RIU LED Definition" (Table 4) for the color definition
4	RF connectors to DCU	QMA x 8	TX 1~4 RX 1~4	Simplex QMA interface to DCU
5	RF connectors to donor signal	4.3-10 x 8(FDD RIU) QMA x 8(TDD RIU)	TX/RX 1~8	Duplex QMA interface to BTS, small cells or other donor signals
6	Coil holder	Coil holder x 2		The holder for the cable rostering
7	GND	Two holes M4 x 2	GND	Connect to the ground

Table 2. RIU LED Definitions

LED	Description	Color	State
ALM	Alarm	Red	Solid
	Device detection (Identified and controlled by the DCU)	Red	Flash (1Hz, 10s)
	No alarm	OFF	Off
RUN	The system is up and running	Green	Flash (1Hz)
	Software or hardware failure	OFF	Off
2TO1	Working mode: 2 TO 1	Green	Solid
	Other working modes	OFF	Off
4TO1	Working mode: 4 TO 1	Green	Solid
	Other working modes	OFF	Off
8TO1	Working mode: 8 TO 1	Green	Solid
	Other working modes	OFF	Off
LED displayer	Cascade level, displayed as "1" or "2" 1 - First cascade level 2 - Secondary cascade level A maximum of 16 devices can be cascaded	-	-

1.4.3 DCU

Figure 9. DCU

Digital Conversion Unit (DCU) is the Corning® Everon™ 6000 G2 central controller. The DCU interfaces between the RIU and DEU, implementing signal conversion, processing, and distribution of multiband digital signals to the Distributed Extension Unit (DEU), major functionalities of which include:

- RF signal conversion into digital signal, processing, and distribution: The DCU transfers received signals from RIU to digital signal in CPRI format. One DCU supports up to 8 RIUs of different bands with 2x2 MIMO, and configures all the radio signal features including frequency, attenuation, operation mode (TDD/FDD).
- Optical port router controlling: The DCU controls the digital signals of different DEUs at different CPRI line rates of 10Gbps or 25Gbps.
- TDD synchronization: The DCU introduces a TDD signal processing module, demodulates TDD-LTE or NR RF signals, and recovers the TDD switch time in the remote units. For a fast detection and commissioning, parameters in Table 5 and Table 6 are needed.
- Center management of the complete system: the DCU is the main management entity of the entire system. All the device and operation information are centrally collected by the DCU, and the DCU interfaces to operators' management system through the SNMP interface.
- Flexible networking for different deployment strategies: The DCU supports daisy chain and/or star connections* as shown in Figures 10-11, where distributed deployments can be enabled, e.g., remote site deployment.

Figures 12-13 show the DCU interfaces. Table 5 lists the interfaces' descriptions.

**Note: please check the software release note for the DCU daisy chain/star connection limitations and supported version.*

Table 3. Uplink-Downlink configurations

Uplink-downlink configuration	Downlink-to-Uplink Switch-point periodicity	Subframe number									
		0	1	2	3	4	5	6	7	8	9
0	5 ms	D	S	U	U	U	D	S	U	U	U
1	5 ms	D	S	U	U	D	D	S	U	U	D
2	5 ms	D	S	U	D	D	D	S	U	D	D
3	10 ms	D	S	U	U	U	D	D	D	D	D
4	10 ms	D	S	U	U	D	D	D	D	D	D
5	10 ms	D	S	U	D	D	D	D	D	D	D
6	5 ms	D	S	U	U	U	D	S	U	U	D

Table 4. Configuration of special subframe (lengths of DwPTS/GP/UpPTS)

<table>
<tr><th rowspan="3">Special subframe configuration</th><th colspan="3">Normal cyclic prefix in downlink</th><th colspan="3">Extended cyclic prefix in downlink</th></tr>
<tr><th>DwPTS</th><th colspan="2">UpPTS</th><th>DwPTS</th><th colspan="2">UpPTS</th></tr>
<tr><th>/</th><th>Normal cyclic prefix in uplink</th><th>Extended cyclic prefix in uplink</th><th>/</th><th>Normal cyclic prefix in uplink</th><th>Extended cyclic prefix in uplink</th></tr>
<tr><td>0</td><td>$6592 \cdot T_s$</td><td rowspan="4">$2192 \cdot T_s$</td><td rowspan="4">$2560 \cdot T_s$</td><td>$7680 \cdot T_s$</td><td>$2192 \cdot T_s$</td><td rowspan="4">$2560 \cdot T_s$</td></tr>
<tr><td>1</td><td>$19760 \cdot T_s$</td><td>$20480 \cdot T_s$</td><td rowspan="3">$2560 \cdot T_s$</td></tr>
<tr><td>2</td><td>$21952 \cdot T_s$</td><td>$23040 \cdot T_s$</td></tr>
<tr><td>3</td><td>$24144 \cdot T_s$</td><td>$25600 \cdot T_s$</td></tr>
<tr><td>4</td><td>$26336 \cdot T_s$</td><td>$7680 \cdot T_s$</td><td rowspan="3">$4384 \cdot T_s$</td><td rowspan="3">$5120 \cdot T_s$</td></tr>
<tr><td>5</td><td>$6592 \cdot T_s$</td><td rowspan="4">$4384 \cdot T_s$</td><td rowspan="4">$5120 \cdot T_s$</td><td>$20480 \cdot T_s$</td></tr>
<tr><td>6</td><td>$19760 \cdot T_s$</td><td>$23040 \cdot T_s$</td></tr>
<tr><td>7</td><td>$21952 \cdot T_s$</td><td>-</td><td>-</td><td>-</td></tr>
<tr><td>8</td><td>$24144 \cdot T_s$</td><td>-</td><td>-</td><td>-</td></tr>
</table>

Special subframe configuration	Normal cyclic prefix in downlink		
	DwPTS	GP	UpPTS
0	3	10	1
1	9	4	1
2	10	3	1
3	11	2	1
4	12	1	1
5	3	9	2
6	9	3	2
7	10	2	2
8	11	1	2

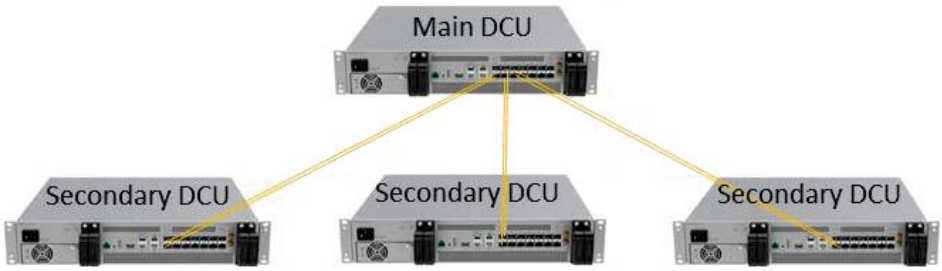

Figure 10. DCU Star Connection

Figure 11.DCU Daisy Connection

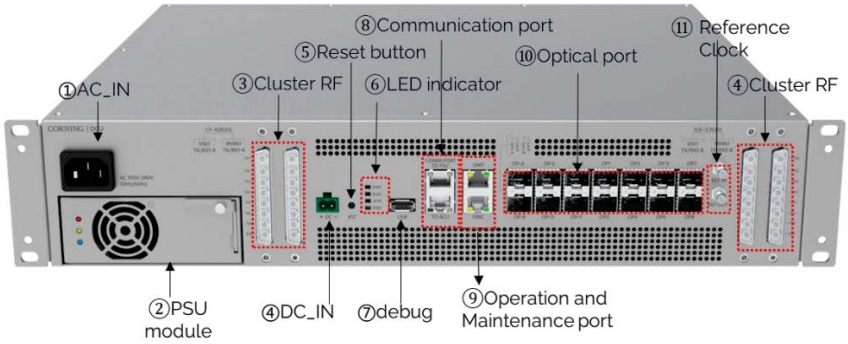

Figure 12. DCU Interface (front view)

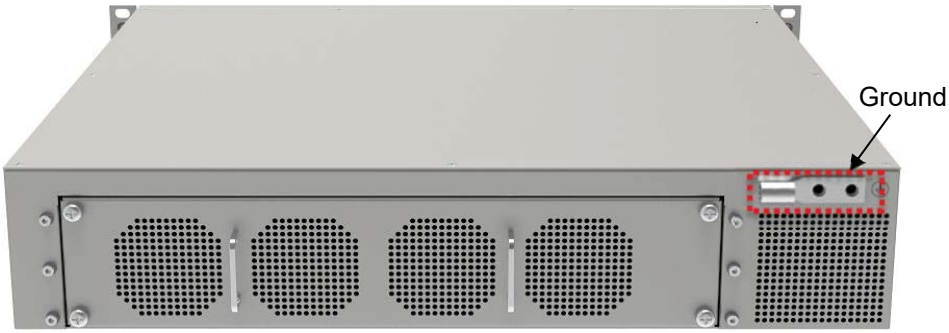

Figure 13. DCU Interface (back view)

Table 5. DCU Interface Introduction

SN	Interface	Interface Type	Silk Screen	Description
1	AC_IN	US Type socket	AC IN 100V~240V, 3A, 50/60Hz	AC input connector with switch, 100~240V
2	PSU Module	PSU module x 1		PSU module with replaceable design
3	Cluster RF connector	Cluster RF connector x 4	IRFC1~4 SISO TX/RX 1~4 SISO TX/RX 5~8 MIMO TX/RX 1~4 MIMO TX/RX 5~8	IRFC: Integrated Radio Frequency Cluster There are totally 4 pcs of cluster and each one has 8 radio ports. The operation frequency range of each radio port is listed in Table 10
4	DC_IN	Phoenix connector	DC_IN	48V DC input
5	Reset button	Button x 1	RST	Reset button for the system setup to factory config
6	LED indicator	LED x 4	PWR/ALM/RUN/PRI	Please check 'Appendix A' for LED definition
7	Debug	USB	USB	For internal debug purpose
8	Communication port	RJ4 5 x 2	COMM Port/RIU/PSU	Communication port for RIU and PSU
9	Operation and Maintenance port	RJ45 x 2	OMT OMC	1 for local monitor and config (OMT), 1 for remote monitor (OMC)
10	Optical port	SFP x 14	OP_A~OP_F (LOS A~F / SYNC A~F) OP1~OP8 (LOS 1~8 / SYNC 1~8)	24.3Gbps CPRI interface, connects to DEU (port 1~8) or cascade DCU (port A~F) Please check 'Appendix A' for Optical LED definition
11	Reference clock	QMA x 2	REF_IN REF_OUT	10MHz reference signal, input and output clock
12	GND	Two holes M4 x 2	GND	Connect to the ground

Table 6. Radio Spec of Cluster RF Port

DCU Input Port	Cluster RF Port Number	IBW	Frequency Range
SISO/MIMO TX/RX 1~2	4	300MHz	1710~4000MHz, TDD/FDD
SISO/MIMO TX/RX 3~4	4	300MHz	1710~4000MHz, TDD/FDD
SISO/MIMO TX/RX 5~6	4	200MHz	600~2700MHz, TDD/FDD
SISO/MIMO TX/RX 7~8	4	200MHz	600~2700MHz, TDD/FDD

1.4.4 DEU

DEU

Distributed Extension Unit (DEU) is the Hub and Distribution element of the system. The DEU interfaces between the DCU and remote units, enabling it to receive the operator's service signals in CPRI format, and to deliver these signals to associated remote units. The DEU supports any mix of power levels, frequency bands and antenna configurations of digital remote units of the Corning® Everon™ 6000 G2 system. Each DEU includes 4 F/O CPRI ports connected to the DCUs or cascaded DEUs, and 24 F/O CPRI ports for connection to the remote units. When additional digital remote units are needed, the system can be easily scaled up by adding additional system elements. Main functionalities include:

- Channelization function: The DEU is the channel controller of the Everon 6000 G2 system. Table 7 (Full TDD 2.5GHz + TDD 3.5GHz) and Table 8 (Full FDD + TDD 2.5GHz) list the possible channel capacities of the DEU.
- CPRI signal distribution: The DEU transfers the dedicated signals to dedicated remote units.* DEU supports 10Gbps or 25Gbps line rate and various kinds of remote units. The line rates and remote units supported are listed in Table 9.
- Flexible network architecture: One DCU supports up to 16 DEUs* by star and/or daisy chain connections, which meets flexible site deployment requirements. The DEU connection topology is shown in Figure 14.
- The DEU manages all connected digital remote units which can be monitored and controlled by the user via SNMP.

Figures 15-16 show the DEU interfaces. Table 10 lists the interfaces' description.

*Notes: Please check the software release note for the DEU signal distribution features and its supporting range of remote units.

Table 7. Carrier Config Option 1. Full FDD band + TDD 3.5GHz band

Band	Maximum Carrier Number (2T2R)				Maximum Total Carrier Number	Maximum Total BW
	10/20MHz	30/40/50MHz	60/80/100MHz	150/200MHz		
2.5GHz	3	2	2	0	5	190MHz
3.5G-A (3450~3700MHz)	8	3	3	1	8	250MHz
3.5G-B (3700~3980MHz)	8	3	3	1	8	280MHz

Table 8. Carrier Config Option 2. Full FDD band + TDD 2.5GHz band

Type	Band	Maximum Carrier Number (2T2R)			Maximum Total Carrier Number	Maximum Total BW
		5/10MHz	15/20MHz	40/60/80/100MHz		
DMRU –678 dLRU-678	600M	3	1	0	12	35MHz
	700L+700U	4	1	0		40MHz
	850M	3	1	0		32MHz
DMRU –1719 dLRU-17192325	PCS	4	4	0	14 (Each sub-band ≤8)	90MHz
	EAWS	4	4	0		90MHz
DMRU-2325 dLRU-17192325	WCS	1	0	0	6	10MHz
	2500M	0	3	2		190MHz

Table 9. DEU Line Rate Application

DEU Line Rate	Remote Unit Type
10Gbps	DLRU-G2-678/DLRU-G2-17192125
25Gbps	DLRU-G2-25/DLRU-G2-35/DMRU-G2-678/DMRU-G2-1719/ DMRU-G2-2325/DMRU-G2-25/DMRU-G2-35

1. DEU supports flexible network architecture of 4 level daisy chain connections as shown in Figure 14.

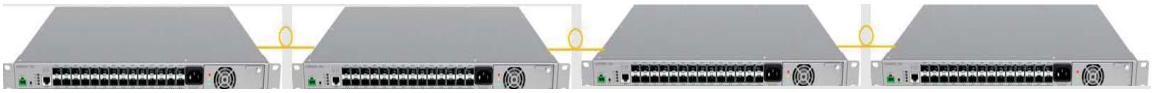

Figure 14. DEU Daisy Chain Connection

*Note: Please check the software release note for the DEU cascading features and limitation of each software version.

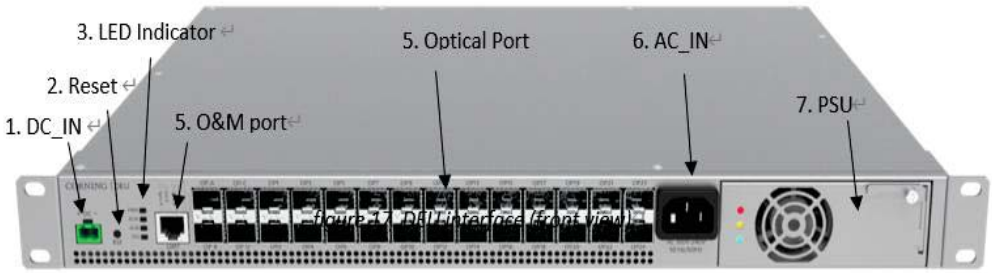

Figures 15-16. DEU Interface (front and back view)

Table 10. DEU Interface Introduction

NO.	Interface	Interface Type	Silk Screen	Description
1	DC_IN	Phoenix connector	DC_IN	48V DC input
2	Reset Button	Button x 1	RST	Reset button for the system reset to factory config
3	LED Indicator	LED x 4	PWR RUN ALM 25G	ALM/RUN/PWR: Indicates the DEU working mode and alarm status 25G: Indicates the DEU is running in 24.3Gbps line rate
4	Operation and Maintenance Port	RJ45 x 1	OMT	Ethernet connection for a local setup session
5	Optical Port	SFP x 28	OP_A~OP_D OP1~OP24	24 ports (1~24) for RU connection, 10.1Gbps/24.3Gbps CPRI interface 2 ports (A~B) for upper unit connection, 2 ports (C~D) for lower unit cascade, 24.3Gbps CPRI interface
6	AC_IN	US Type socket + Switch x 1	AC IN 100V~240V, 3A,50/60Hz	AC input connector, Max current 3A, 100~240V
7	PSU Module	PSU module x 1	POWER MODULE	PSU module with easy assembly installation design
8	GND	Two holes M4 x 2	GND	Connect to the ground

1.4.5 Remote Units

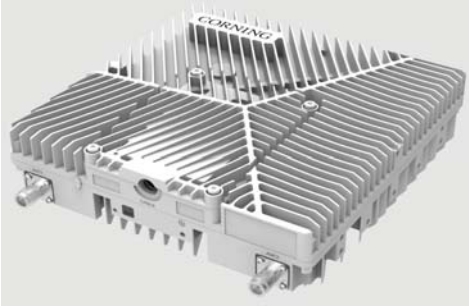

Figure 17. DLRU Image

Figure 18. DMRU Image

The Remote Unit (RU) is the radio coverage unit located at the end of the DAS system. The Remote Unit interfaces between DEU and the UE (User Equipment), enabling it to receive the operator service signals in CPRI format, transfer to RF signal and send to UE. Corning digital remote antenna units includes 2 power level types: dLRU/DMRU The power levels vary from 20dBm to 40dBm to meet different coverage scenarios. The major functionalities include:

- Digital and analog signal transfer: The RU transfers digital and analog signal between DEU and antenna port. The DU supports up to 530 IBW signal in C-band with its powerful transceiver.
- Multi-band signal process: The RU supports multiple band signal of the single unit. One dLRU supports up to 4 bands, one DMRU supports up to 2 bands.
- Channel control function: The RU configures all emission channels including power level, ON/OFF status and working mode (UL/DL/TDD).
- Control and management function: The RU can be remotely upgraded and monitored. All of the RU's parameters including the alarm, device status, and emission power are all transferred to the DEU via CPRI lines in optical ports.

Table 11 shows RU band, CPRI line rate, and optical port number.

The dLRU interfaces and the description are shown in Figure 19 and Table 12.

Table 11. RU Band, CPRI, Optical port list

RU Type	RU	Operation band	CPRI Line Rate	Optical Fiber Number
dLRU	dLRU-G2-678	600 700L 700U FirstNet 800/850MHz	10Gbps	1
	dLRU-G2-17192325	1900(PCS) 2100(EAWS) 2300(WCS) 2500 TDD	10Gbps	2
	dLRU-G2-25	2500 TDD	25Gbps	1
	dLRU-G2-35	3500 TDD	25Gbps	2
DMRU	DMRU-G2-678	600 700L 700U FirstNet 800/850MHz	25Gbps	1
	DMRU-G2-1719	1900(PCS) 1700(EAWS)	25Gbps	1
	DMRU-G2-2325	2300(WCS) 2500 TDD	25Gbps	1
	DMRU-G2-25	2500 TDD	25Gbps	1
	DMRU-G2-35	3500 TDD	25Gbps	2

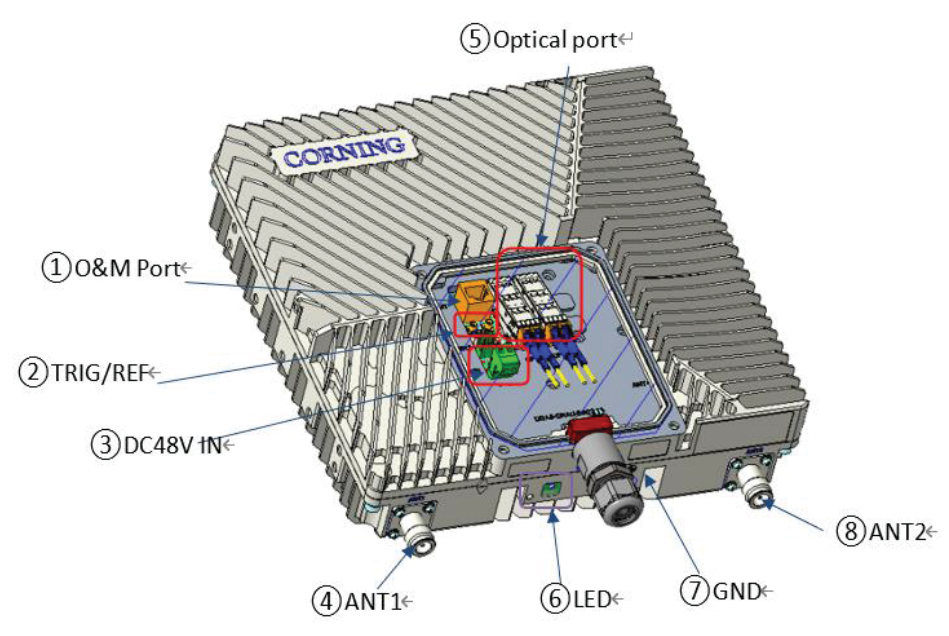

Figure 19. dLRU Interface Image

Table 12. dLRU Interface Introduction

NO.	Item	Interface Type	Silk Screen	Description
1	Operation and Maintenance Port	RJ45	OMT	Ethernet connection for the local setup
2	TRIG/REF	MCX interface	TRIG/REF	Synchronous trigger signal, used for device test
3	DC48V IN	Power input port	DC48V IN	Power input port, voltage input range 38V~58V, PWR1 and PWR2 will be combined inside the device before supplying power to the device
4/8	ANT	4.3-10 interface	ANT1	RF input and output, used for external antenna connection
			ANT2	
5	Optical Port	SFP optical port	OP1/OP2	24.3/9.8Gbps CPRI interface for DEU connection
6	Status	LED indicator	STAT	Indicating the operation status of the equipment
7	GND	GND interface		Used for grounding the chassis and the earth, single hole

Figure 20. DMRU Interfaces

Table 13. DMRU Interface Introduction

NO.	Item	Interface Type	Silk Screen	Description
1	ANT	4.3-10 interface	ANT1	RF input and output, used for external antenna connection
			ANT2	
2	Couple port	SMA	Couple 2	RF couple port, used for signal test and debug
3	Optical port	SFP optical port	OP1/OP2	24.3Gbps CPRI interface for DEU connection
4	Operation and Maintenance port	RJ45	OMT	Ethernet connection for the local setup
5	LED	LED indicator	STAT	The operation status of the equipment
6	AC IN	Power input port	AC IN	Power input port, voltage input range 100V~240V, 3A

1.4.6 System topology and gain assignment

The system topology contains the following network elements:

- One master DCU – All the configs and alarms of RIUs, DCUs, DEUs and remote units are transferred to it, and interfaces the SNMP server of DAS system.
- Slave DCU –one master DCU connects to 3 slave DCUs
- RIUs – each DCU can connect to 16 RIUs
- DEU – one master DCU connects to 4 DEUs, and each DEU connects to 4 DEUs in cascade, so that one master DCU supports 16 DEUs
- Remote units – each DEU connects to 12 or 24 remote units, depending on the types and line rates of the remote unit. For more detail, please refer to Table 10.

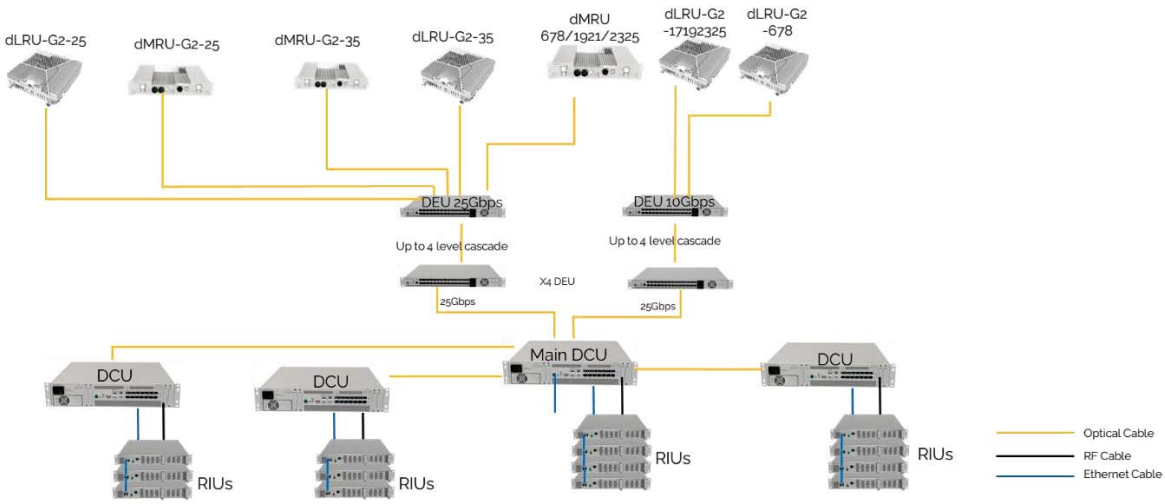

Figure 21. System Topology

Two switches for gain control are available in the system – RIU high gain mode switch and DCU high gain mode switch. The suggestions for the switches are listed in Table 14.

- The RIU high gain mode will add 30dB insert loss while switching to OFF status
- The DCU high gain mode will add 12dB insert loss while switching to OFF status

Table 14. Gain Setting Guide

Base station power	RIU high gain mode switch	DCU high gain mode switch	RIU input power	DCU input power	DCU output power	dLRU output power
	30dB IL while OFF; -7dB IL while ON	12dB gain while OFF	RIU ATT range (0~20dB)	DCU ATT range (0~20dB)	-7dBFS mapping to max output power	
37dBm	OFF -30dB	OFF 0	37dBm (RIU ATT set to 14, total IL=44dB)	-7dBm (DCU ATT set to 0)	-7dBFS	24dBm
23~37dBm	OFF -30dB	OFF 0	23~37dBm (RIU ATT set to 0~14, total IL=30~44dB)	-7dBm (DCU ATT set to 0)	-7dBFS	24dBm
0~23dBm	ON -7dB	OFF 0	0~23dBm (RIU ATT set to 0~20, IL=7~27dB)	-7~-4dBm (DCU ATT set to 0~3 dB)	-7dBFS	24dBm
-10~0dBm	ON -7dB	ON +12dB	-10~0dBm (RIU ATT set to 0~12, IL=7~19dB)	-17~-19dBm (DCU ATT set to 0~2dB, gain=10~12 dB)	-7dBFS	24dBm

2. System Installation

This chapter provides installation instructions for the system units. Refer to the specific elements required in your deployment:

- Headend, see 2.1
- Remote Units Installation:
  - dLRU, see 2.5.
  - DMRU, see 2.6.

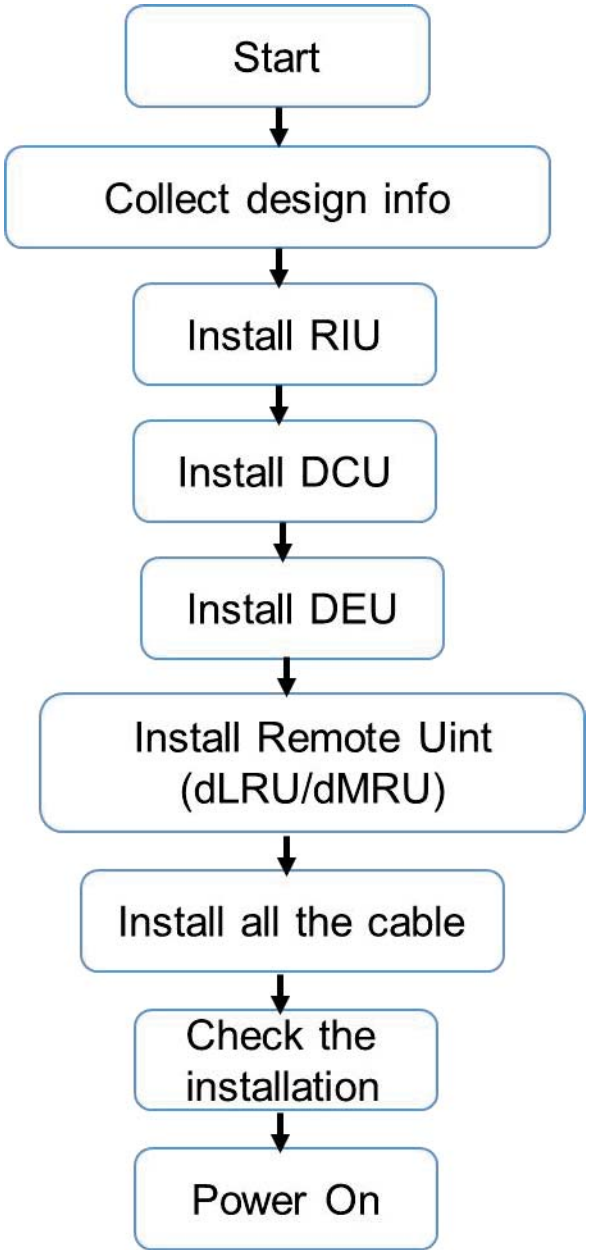

Figure 23. The Installation Process

2.1 Headend Units – Architecture Example

Example: 2X2 MIMO, 1 Operator

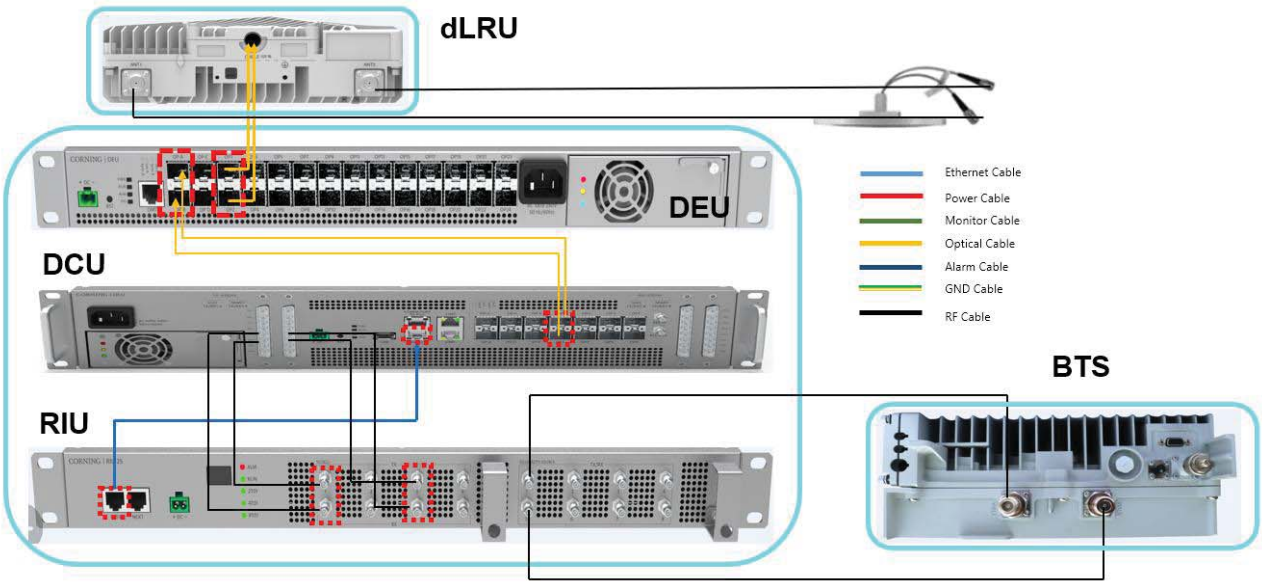

Figure 24. dLRU Architecture Image

2.2 RIU Installation

- **Example of system connection**

  See 2.1 example: 2x2 MIMO

  Contact the site designer for cable connection topology of the system.

- **To install the RIU, follow these steps:**

  1. Verify the box contents, see 2.2.1
  2. Mount the RIU, see 2.2.2
  3. Connect the RIU cable, see 2.2.3

4.

2.2.1 Verify Box Contents

Open the package and verify that all items in the Table below are available.

Table 16. RIU Package Items List

Item	Quantity	Image	Part Number
HARDWARE – provided in the box			
RIU Unit	1		
Ethernet Communication Cable	1		Connected to the DCU or RIU of next slave device
DC Power Adapter	1		
HARDWARE – not provided			
4 screws #8 or 4 mm (For attachment to rack)	4		
SOFTWARE			
NA			
Required TOOLS			
Cross Screwdriver			

2.2.2 Mount the RIU

Place the RIU horizontally in the 19-inch rack, align the four holes on the lugs on both sides of the equipment with the nuts, install the M6 screws and fasten them.

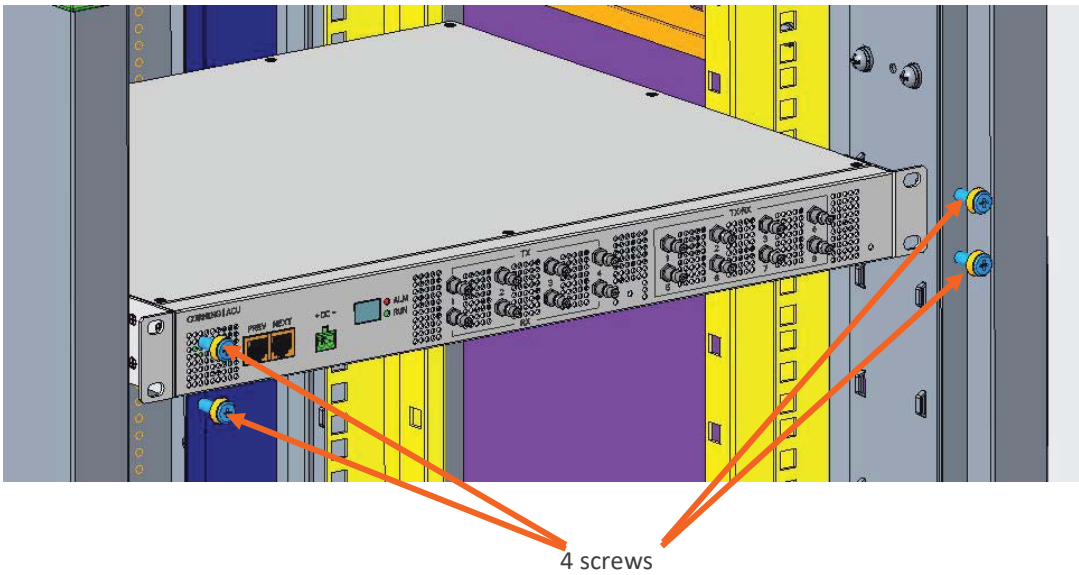

Figure 22. RIU Rack Installation

1) Connect the RF cables on the chassis with M3 screws and sort out the RF cables.

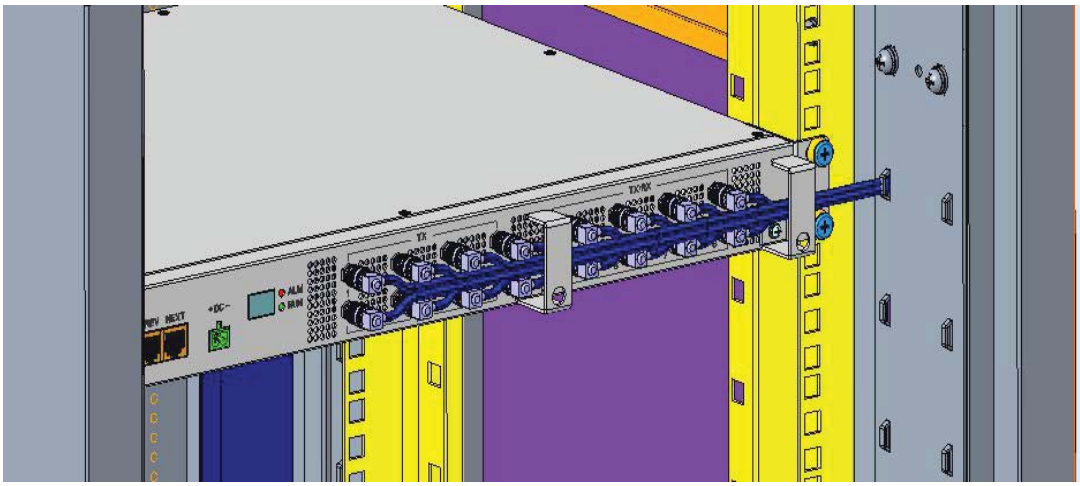

Figure 26. RIU Rack Installation with Cables

2.2.3 RIU Cable Connection

Connect the external cable as shown in the following diagram.

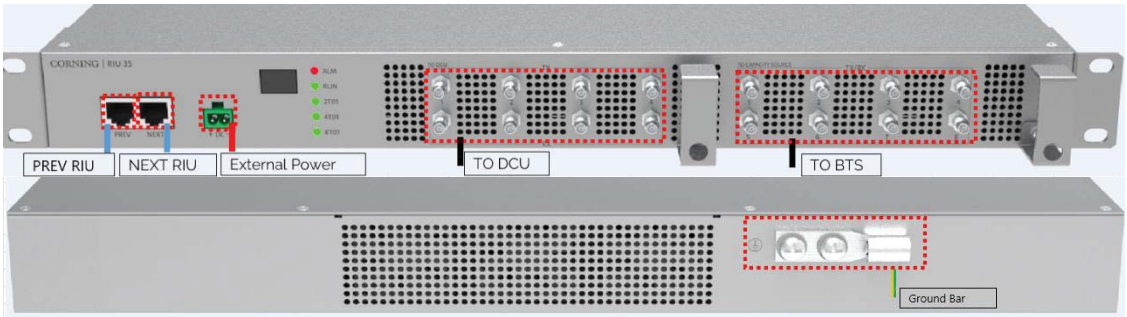

Figure 27. RIU Cable Connection

Cable List for RIU				
Cable	One End		The Other End	
	Connector	Connected to...	Connector	Connected to...
GND cable	OT terminal (M4)	Ground screw on the RIU	OT terminal (M4)	Ground terminal on the external ground bar
DC power cable (indoor)	Phoenix connector	DC power input socket on the RIU	2-pin plug	External power input socket
RF cable	QMA connector	Simplex radio connectors	Cluster RF connector	DCU
	QMA connector	Duplexer radio connectors	Required for BTS	BTS
Ethernet communication cable	Communication port (RJ45 x 2)	PREV: Upper cascading port to DCU or upper level RIU NEXT: Lower cascade port to other RIU	Communication port (RJ45 x 2)	RIU/DCU

2.3 DCU Installation

- **Example of system connection**

  See 2.1 for the installation example (2x2 MIMO).

- **Follow these steps to install the DCU:**

  1. Verify the box contents, see 2.3.1
  2. Mount the DCU, see 2.3.2
  3. Connect the DCU cable, see 2.3.3

2.3.1 Verify Box Contents

Open the package and verify that all the items in the Table below are available:

Table 17. DCU Package Items List

Item	Quantity	Image	Part Number
HARDWARE – provided in the box			
DCU Unit	1		
Ethernet Communication Cable	1		
DC Power Adapter	1		
HARDWARE – not provided			
4 Screws #8 or 4 mm (for attachment to ceiling)	4		
SFP+ Pluggable transceivers (hot-pluggable optical transceiver module) Support 24.3Gbps line rate, single-mode	1		
Optical cables Up to 10 km LC/UPC SM DX	1~14		
SOFTWARE			
NA			
Required Tools			
Cross Screwdriver	1		

2.3.2 Mount the DCU

Step 1: Take the DCU out of the package.

Figure 28. DCU Image

Step 2: Put the DCU horizontally into the rack, tighten the M6 screws as shown below, and the installation is completed.

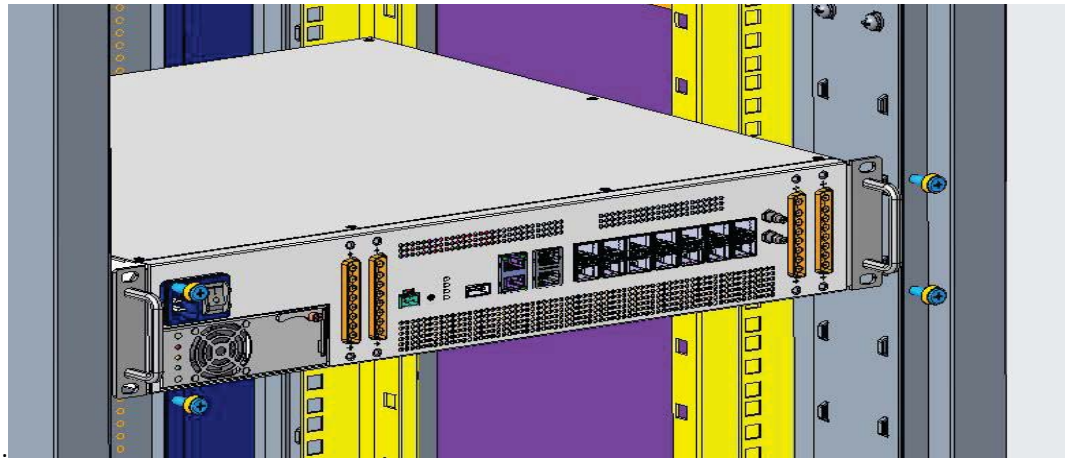

Figure 29. Installation Diagram of DCU in the Rack

Step 3: Plug in the RF cable plug (RF cable not shown in the below), as shown in Figure 30.

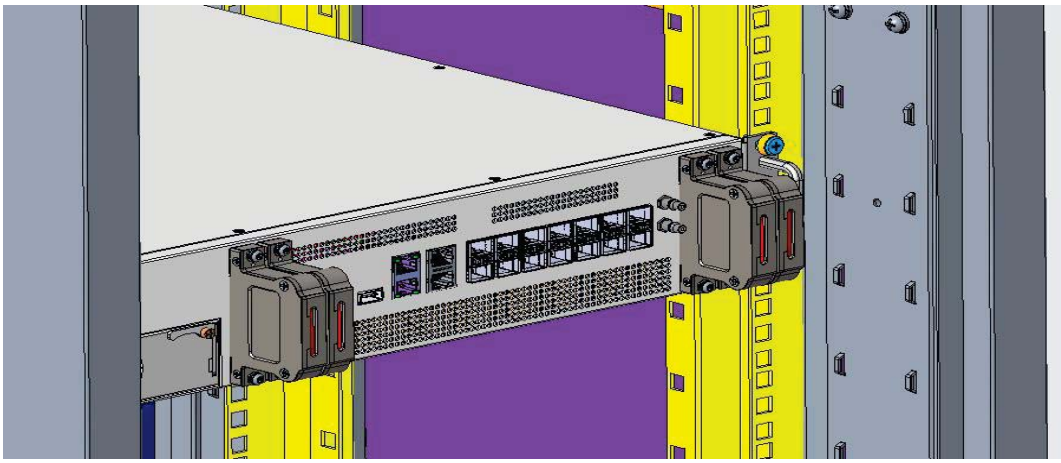

Figure 30. DCU RF Cable Plug Installation

2.3.3 DCU Cable Connection

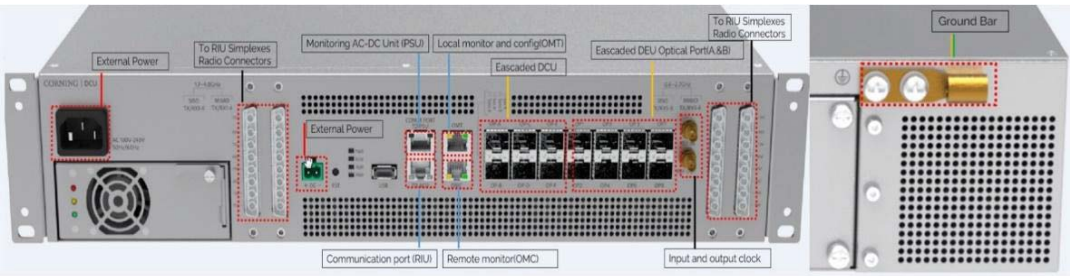

Figure 31. DCU Cable Connection

Cable List of Dual DCU				
Cable	One End		The Other End	
	Connector	Connected to...	Connector	Connected to...
GND cable	OT terminal (M4)	Ground screw on the RIU	OT terminal (M4)	Ground terminal on the external grounding bar
DC power cable (indoor)	Phoenix connector	DC power input socket on the RIU	2-pin plug	External power input socket
AC power cable (indoor)	US Type socket + Switch x 1	AC IN	Depending on power device	External power device
		100V~240V, 1.3A-0.6A,50/60Hz	(100V-240V,50Hz/60Hz)	(100V-240V,50Hz/60Hz)
RF Cable	Cluster RF connector	IRFC1~8	QMA Connector	RIU
		SISO TX/RX 1~4		
		SISO TX/RX 5~8		
		MIMO TX/RX 1~4		
		MIMO TX/RX 5~8		

2.4 DEU Installation

- **Example of system connection**

  See 2.1 for the installation example (2x2 MIMO).

- **To install the HEU, follow these steps:**
  - Verify the box contents, see 2.4.1
  - Mount the DEU, see 2.4.2
  - Connect the DEU cable, see 2.4.3

2.4.1 Verify Box Contents

1. Open the package and verify that all items in the Table below are available:

Table 18. DEU Package Items List

Item	Quantity	Image	Part Number
HARDWARE – provided in the box			
DEU Unit	1		
DC Power Adapter			
HARDWARE – not provided			
4 Screws #8 or 4 mm (for attachment to ceiling)	4		
SFP+ Pluggable transceivers (hot-pluggable optical transceiver module) Support for 24.3Gbps line rate, single-mode	1		
Optical cables Up to 10 km LC/UPC SM DX			
SOFTWARE			
NA			
TOOLS Required			
Cross Screwdriver			

2.4.2 Mount the DEU

1. Take the DEU out of the package.

Figure 32. Rack Installation – Step 1

2. Mount the DEU in the rack with 4 pcs of M6 screws.

Figure 33. Rack Installation - Step 2

3. Install the DEU in the rack.

Figure 34. Rack Installation - Step 3

2.4.3 DEU Cable Connection

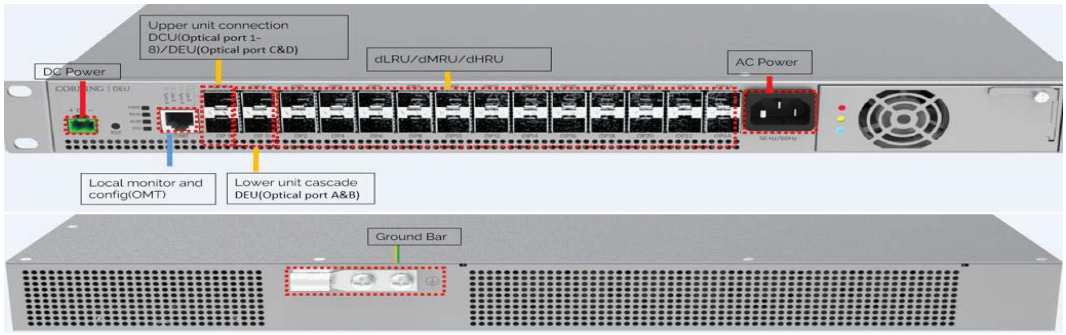

Figure 35. DEU Cable Connection

Cable List of Dual DEUs				
Cable	One End		The Other End	
	Connector	Connected to...	Connector	Connected to...
GND cable	OT terminal (M4)	Ground screw on the RIU	OT terminal (M4)	Ground terminal on the external bar
AC power cable (indoor)	US Type socket + Switch x 1	AC IN	Depending on power device	AC Power device
		100V~240V, 1.3A-0.6A,50Hz/60Hz	(100V-240V,50Hz/60Hz)	(100V-240V,50Hz/60Hz)
Fiber Cable	Optical port	Optical module	Optical port	dLRU/dMRU or DEU
				DCU or DEU

2.5 dLRU Installation

2.5.1 Verify box Contents

1. Open the package and verify that all items in the following Table are available:

Table 19. dLRU Package Items List

NO.	Description	Model	Image	Quantity
1	dLRU-2.5/3.5 Unit	dLRU unit		1
2		Wall-mounting bracket (may also be used for pole)		1
3		Left side brackets for dual-unit configuration		1
4		Right side brackets for dual-unit configuration		1
5		Hinge	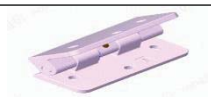	1
6		Combiner – for dual unit configuration	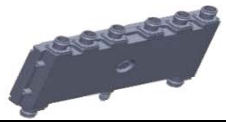	1
7		RF jumper cables		1
8		DC power adapter		1

2.5.2 Mount the dLRU

The LRU may be mounted on a wall or on a pole: single or dual.

Select the configuration related to your deployment.

**Note: For dual unit installations, the internal cable must be connected before connected between the units.*

1. Open the cover by unscrewing 4 screws

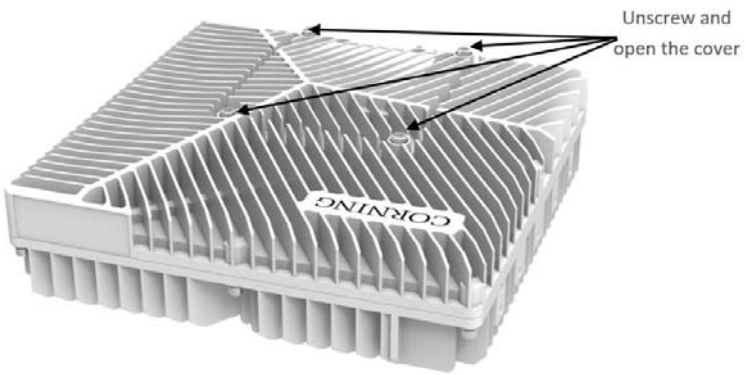

2. Connect the DC wire pair (48V) to any one of the two power connectors, via the DC power adapter (terminal block connector)
3. Remove the rubber stopper from the SFP+ connector located in the dLRU cable port. Connect the SFP+ LC/UPC SM DX optic cable to the dLRU optic connector.

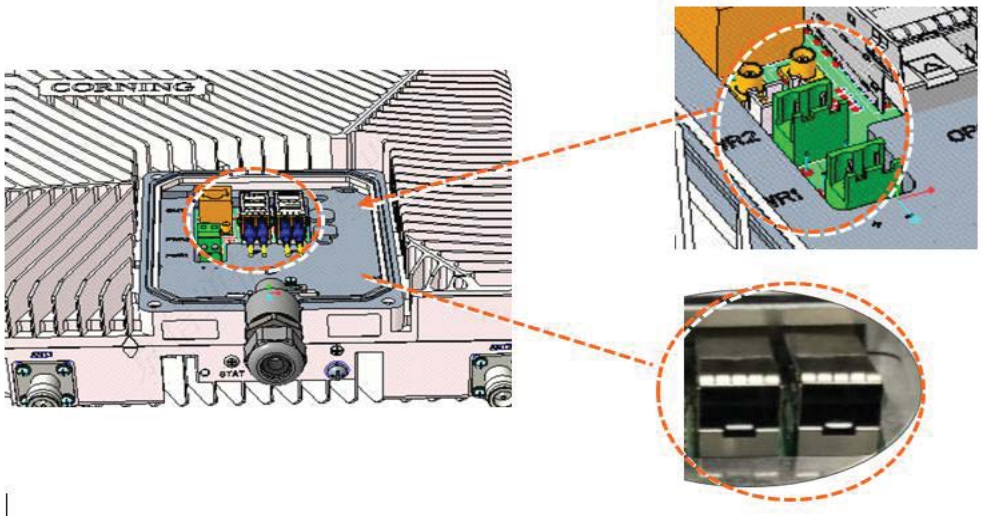

Power Socket/optical ports in dLRU

2.5.2.1 Wall Installation

- **For a single unit**

1) Connect the bracket to the wall with 4 screws, as shown in the Figure below:

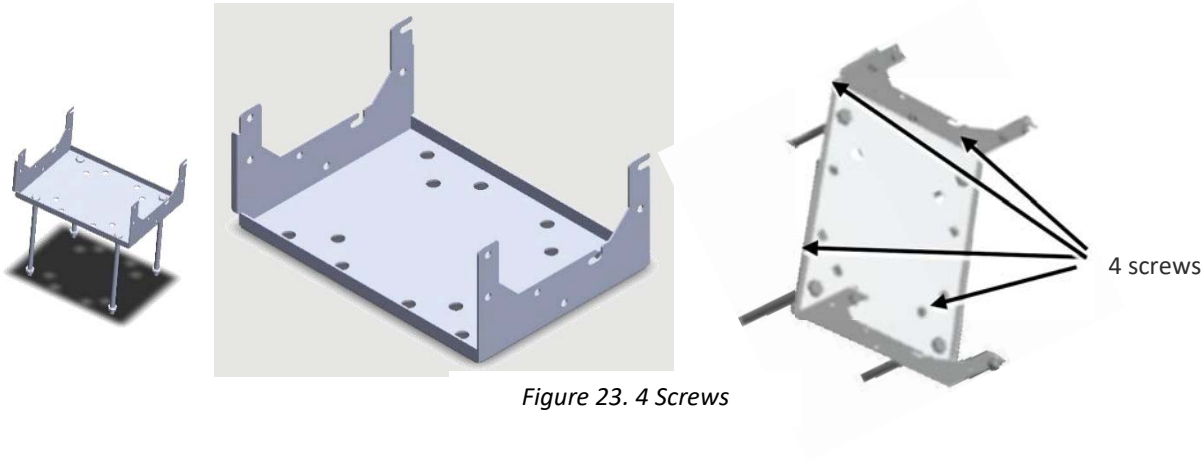

Figure 23. 4 Screws

2) Mount the LRU on the bracket with 4 screws.

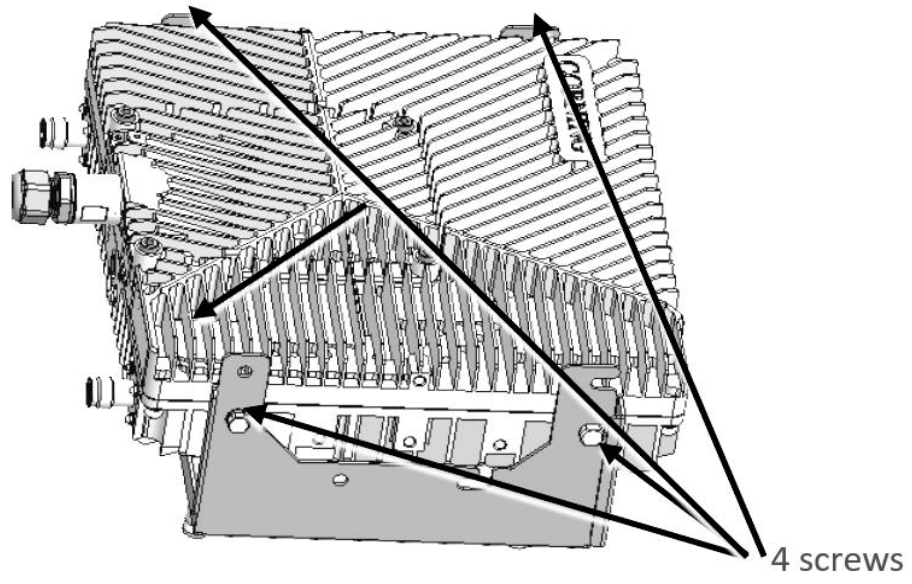

Figure 24. 4 Screws

- **For a dual unit:**

1) Connect the combiner to the mounting bracket with 4 screws.

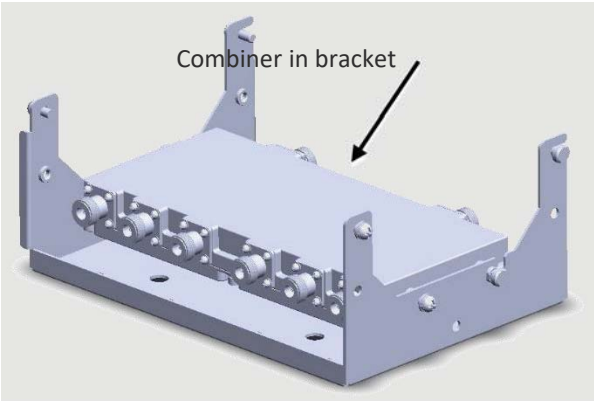

Figure 38. Combiner in the Bracket

2) Connect between the low-band and mid-band units with the side bracket:

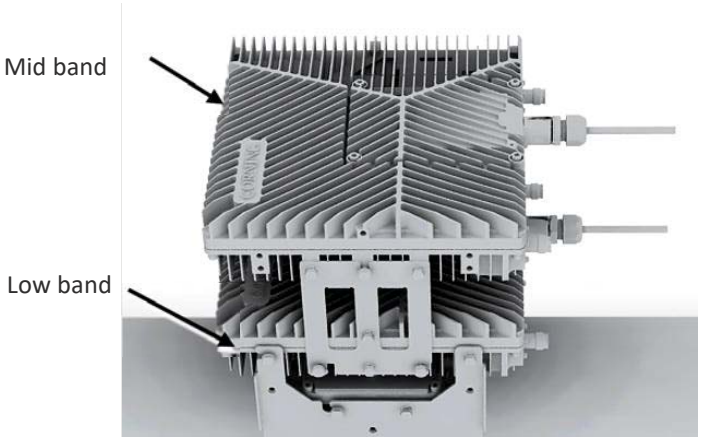

Figure 39. Combiner in the Bracket

**Note: Ensure that the low-band device is connected at the bottom, and the mid-band at the top.*

Connect between the two devices and the bracket (already carrying the combiner) with 4 screws.

2.5.2.2 Ceiling Installation

- **Single unit ceiling installation**

**Note: The ceiling needs to be cement board or hardwood board which enables it to bear the weight of 18 pounds.*

The installation is shown in Figure 40:

1) Drill holes on the ceiling at a distance of 200 mm*160 mm according to the size of the mounting holes of bracket, then drive the expansion bolts into the holes, install the mounting bracket, pad gaskets, and lock the nuts.
2) Tighten the M6 bracket screws on the left and right sides of the upper part of the dLRU, and then hang the device on the mounting bracket.
3) Lock the device on the mounting frame with M6 combination screws, as shown below

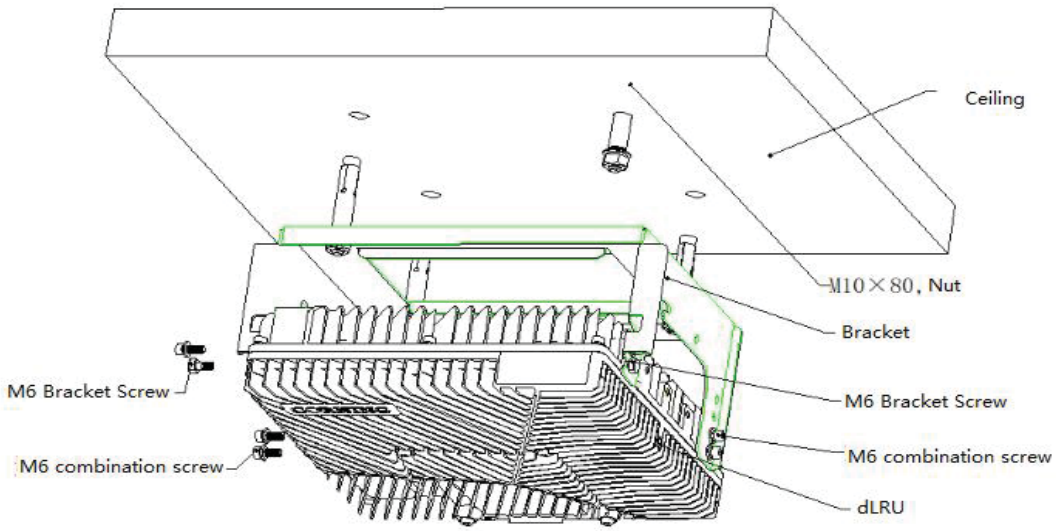

Figure 40. Single Unit Ceiling Installation

- **Dual unit combined ceiling installation**

If the application scenario requires the use of low frequency and intermediate frequency devices, it is suggested to use the cascading installation.

**Note: The ceiling needs to be cement board or hardwood board which enables it to bear the weight of 45 pounds.*

The installation steps are as follows:

1) Assembly of right bracket and hinge

The installation of the right bracket and hinge is shown in Figure 41.

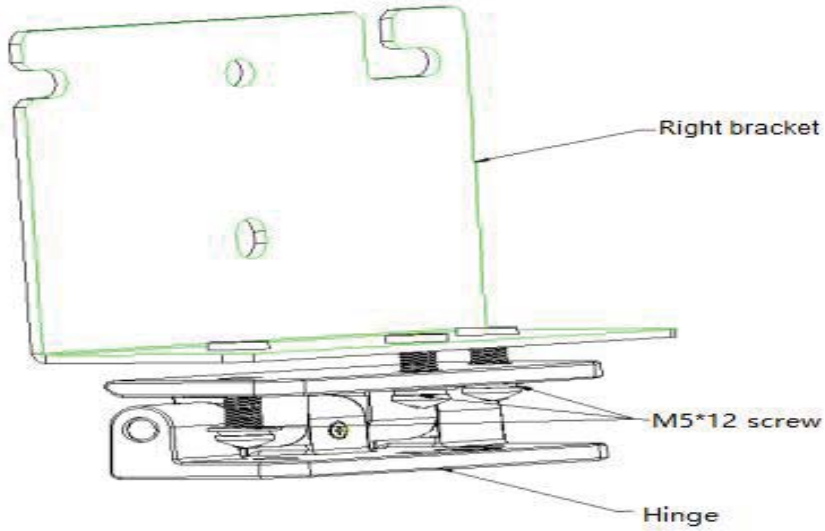

Figure 41. Right Bracket and Hinge Installation

2) Assembly of left bracket, right bracket, and equipment, as shown in Figure 42.

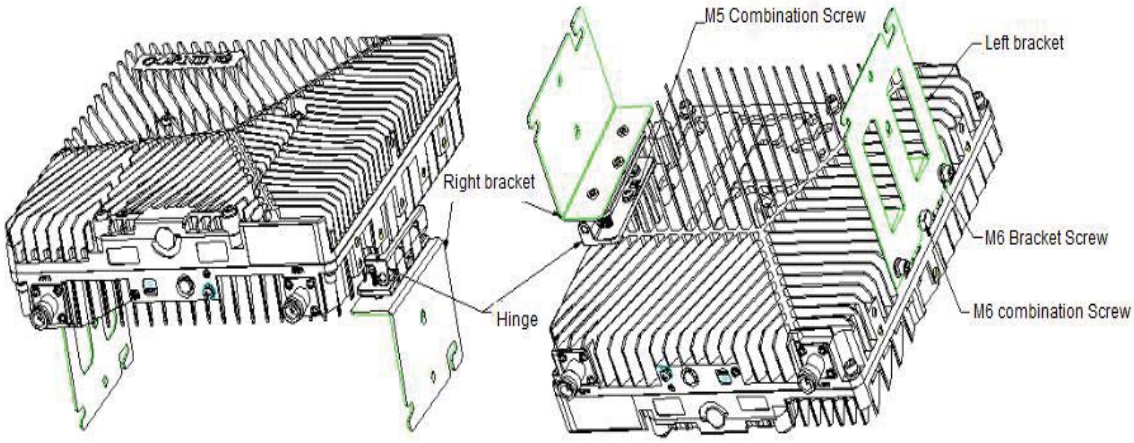

Figure 42. Installation of the Left and Right Brackets and Device Bracket

3) Bracket installation:

Drill holes on the ceiling at a distance of 200 mm*160 mm according to the size of the mounting holes of bracket, then drive the expansion bolts into the holes, install the mounting bracket, pad gaskets, and lock nuts, as shown in Figure 43.

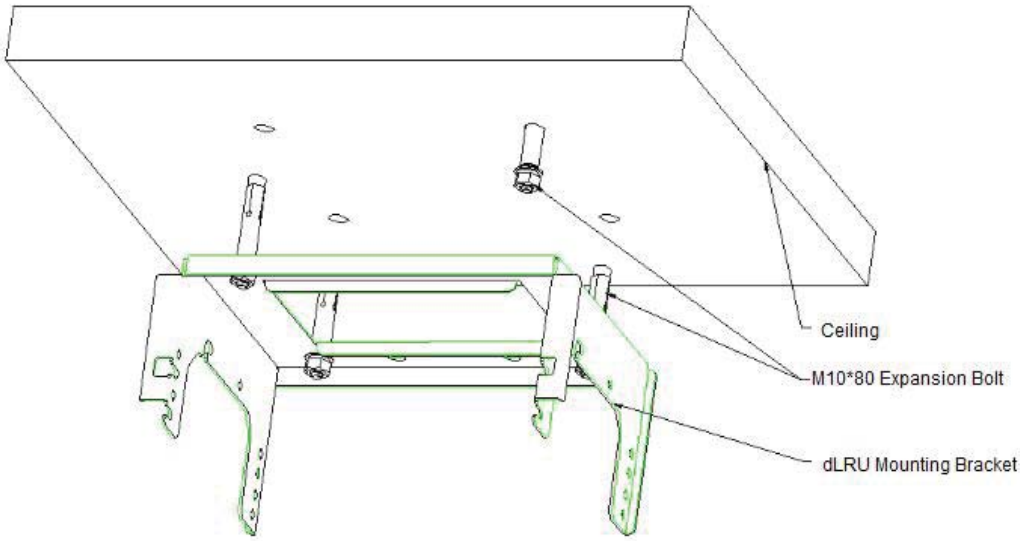

Figure 43. Mounting Bracket Installation Diagram

4) Combiner Installation:

Tighten the M6 bracket screws in advance in the left and right screw holes on the upper side of the combiner (the upper side with two RF outlets). Then hang it in the mounting bracket as shown in Figure 45 and fasten it with M6×15 pentagonal combination screws.

**Note: If the device is installed outdoors, please connect the RF jumper cable before installing the combiner and take waterproof measures for the connector in advance. Otherwise, it is inconvenient to take waterproof measures for the connector after the device is installed.*

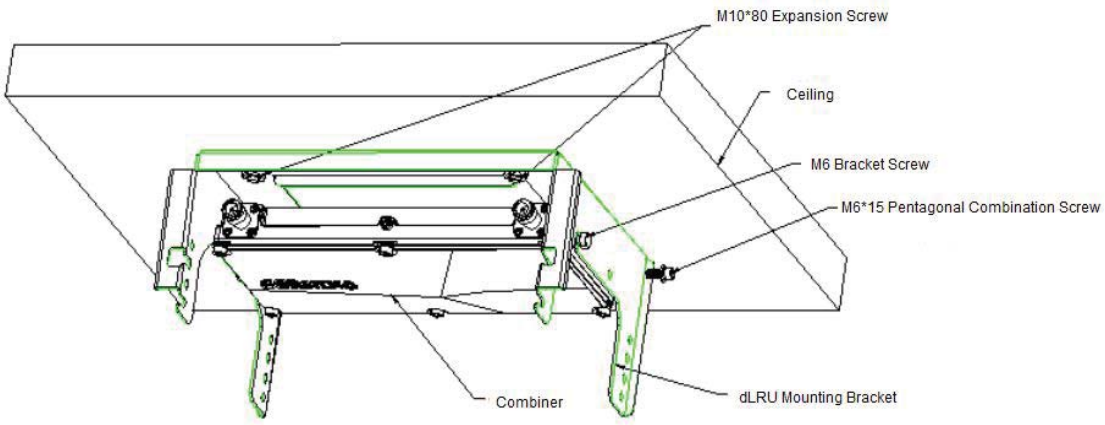

Figure 44. Combiner Installation Diagram

- **Low-Band dLRU installation**

Tighten the M6 bracket screws on the left and right sides of the upper part of the dLRU, and then hang the device on the mounting bracket. as shown in the Figure below.

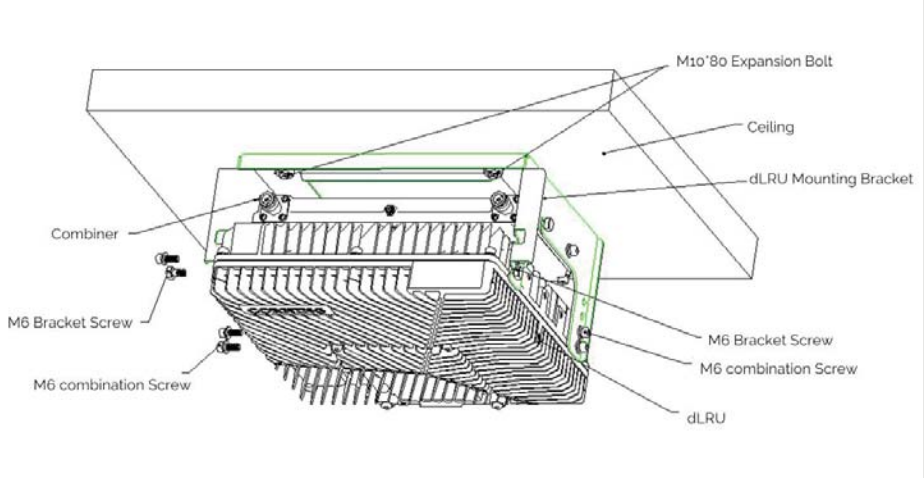

Figure 45. Low-Band dLRU Installation

- **Hang the combination**

Hang the combination of the left and right brackets with four M6 bracket screws, and then use M6×15 pentagonal combination screws to fasten the second dLRU as shown in the Figure below.

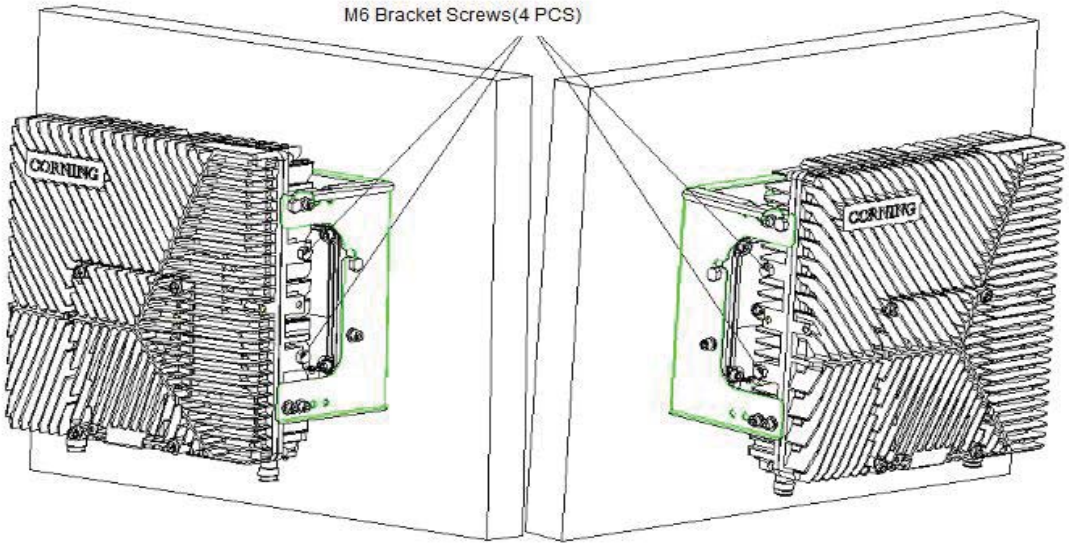

Figure 46. M6 Bracket Screw Holes

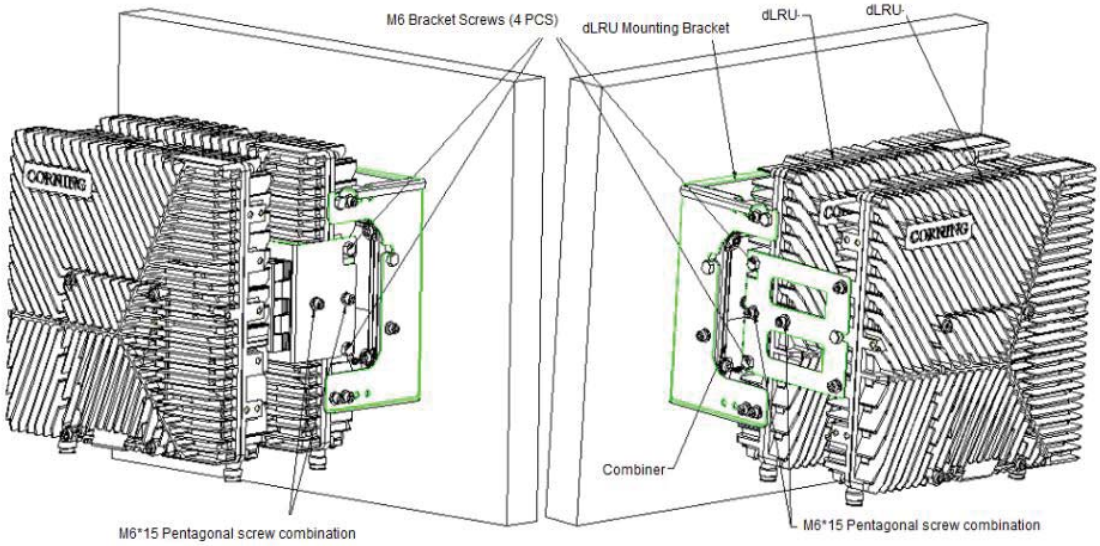

Figure 47. dLRU Installation Diagram

2.5.2.3 Pole Installation

- Single unit pole installation

The pole-mounting installation of all devices is the same as the wall-mounting installation above, except that the equipment is installed on a pole. As shown in Figure 48, M10 bolts, M10 nuts, elastic flat washers, and pole mounting brackets are required. They can be installed on poles from ϕ65 mm to ϕ140 mm depending on the length of the M10 bolts selected (the recommended length is 12 cm and 20 cm).

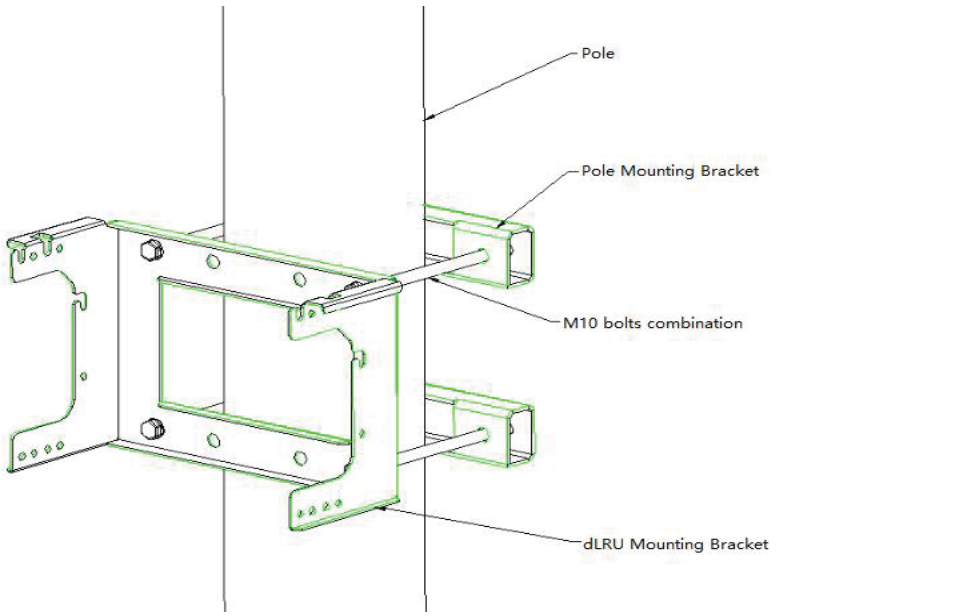

Figure 48. Pole-Mounting Diagram

Tighten the M6 mounting screws on the left and right sides of the upper part of the device, then hang the device on the corresponding positions of the dLRU mounting bracket, and finally tighten the M6 combination screws as shown in Figure 49.

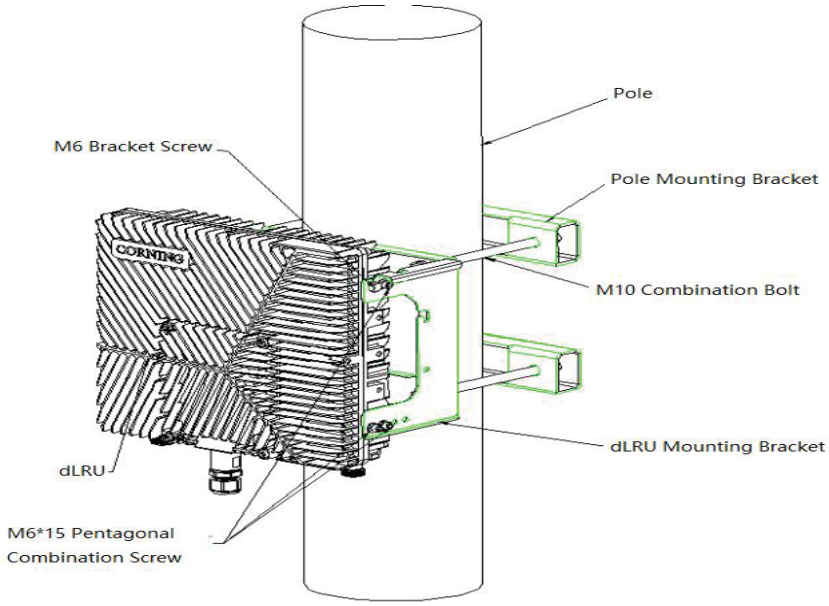

Figure 49. Diagram of Pole Installation for Single Unit

- Dual unit pole installation

  Before installing the bottom device, please install the combiner first. Put the M6 bracket screws on the left and right sides of the combiner, and then hang the combiner on the mounting bracket. Finally, tighten the M6×15 pentagonal combination screws, as shown in the Figure below.

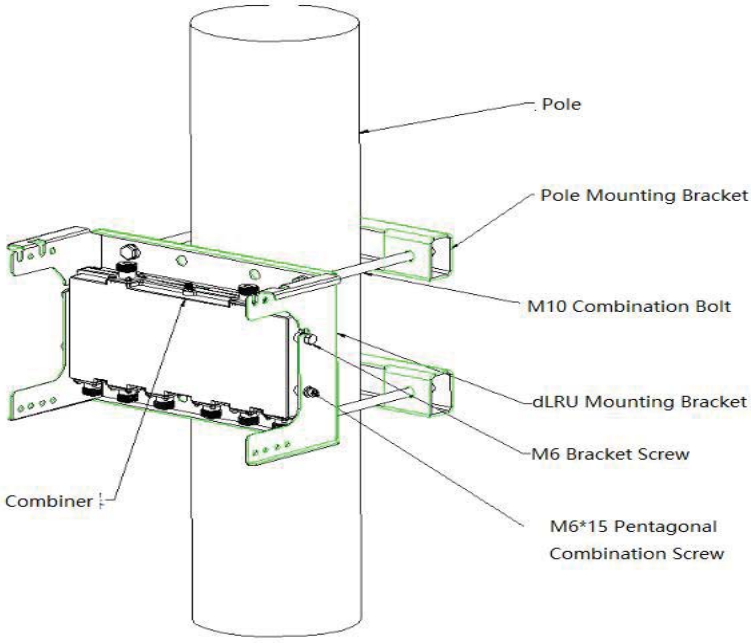

Figure 50. Installation Diagram of the Combiner

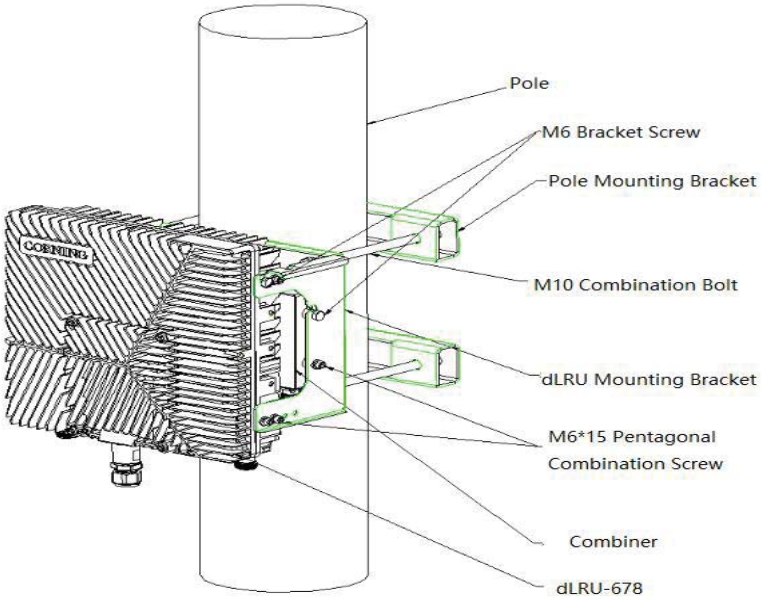

Figure 51. Installation Diagram of dLRU Pole

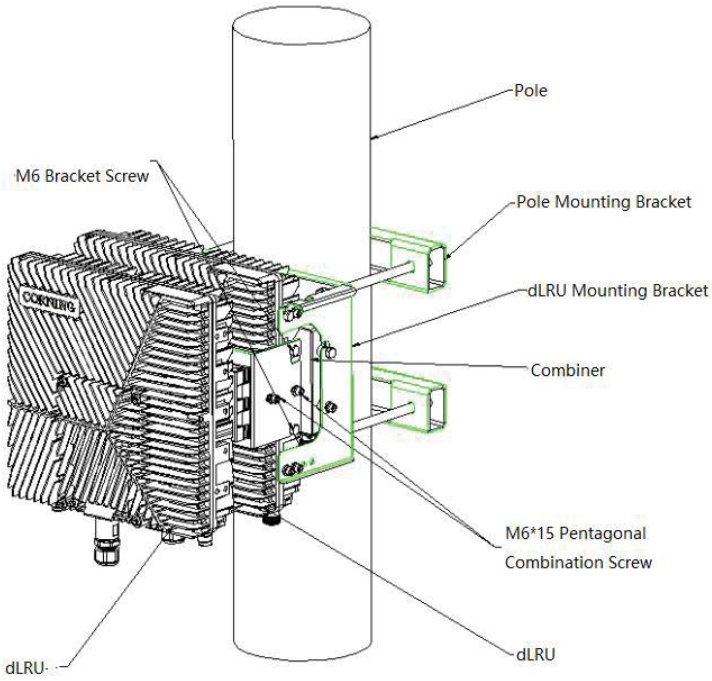

Figure 52. Dual Unit Installation Diagram

2.5.3 Power+ SPF+ Cable

For each unit, open the cover by removing 4 screws:

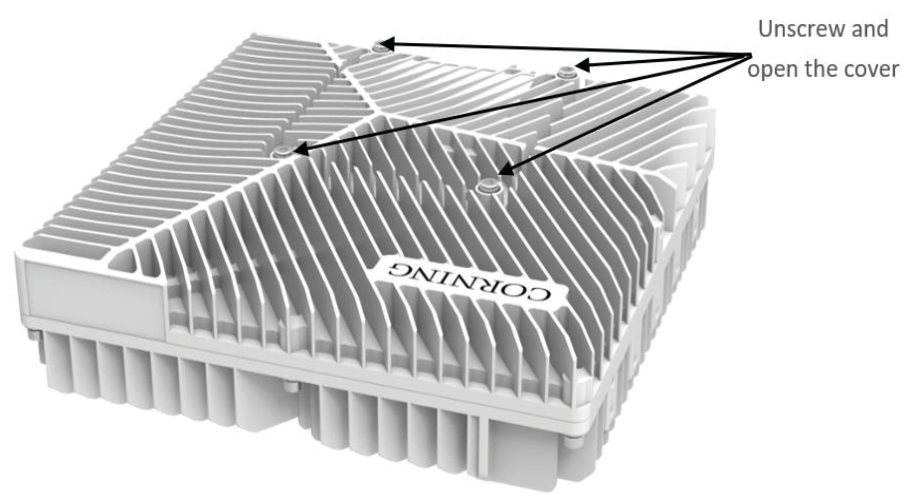

Figure 53. Connection of Two Units and a Combiner

For each unit, connect the internal (undercover) cables as follows:

- Power socket, see Figure 54.
- SFP+, see Figure 55.

The voltage range of the device power supply is DC36V～57V.

Remove the rubber plug from the SFP+ connector located in the LRU RF port.

Connect the SFP+ LC/UPC SM DX optical cable to the LRU optical connector.

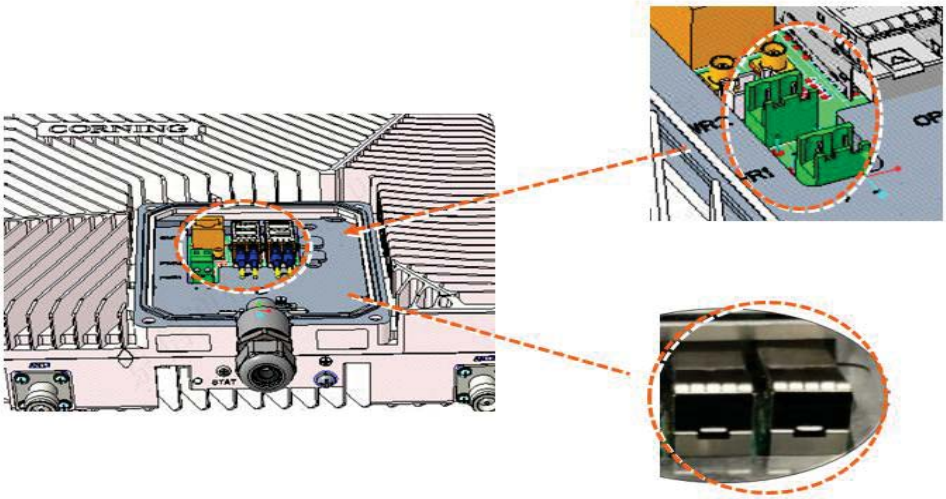

Figure 54. Power Socket

Figure 55. Remove Rubber Plug from the Port and Insert the SFP+ Pluggable Transceivers (hot-pluggable optical transceiver module) into it.

2.5.4 Connect the Ground and Antenna Cables

2.5.4.1 Ground

**Note: Ground according to local regulations.*

The following additional (not supplied) tools and components are required for connecting the system ground:

- The size of ground shall meet the local and national installation requirements. The provided ground lug supports 14 AWG to 10 AWG stranded copper (or 12 AWG to 10 AWG solid) wire conductors.
- Use a wire-stripping tool to remove approximately 0.4 inch (10.9 mm) of the covering from the end of the ground.
- Insert the stripped end of the ground into the open end of the ground lug.
- Crimp the ground in the barrel of the ground lug. Verify that the ground is securely attached to the ground lug by holding and gently pulling on it.
- Prepare the other end of the ground and connect it to an appropriate ground point.

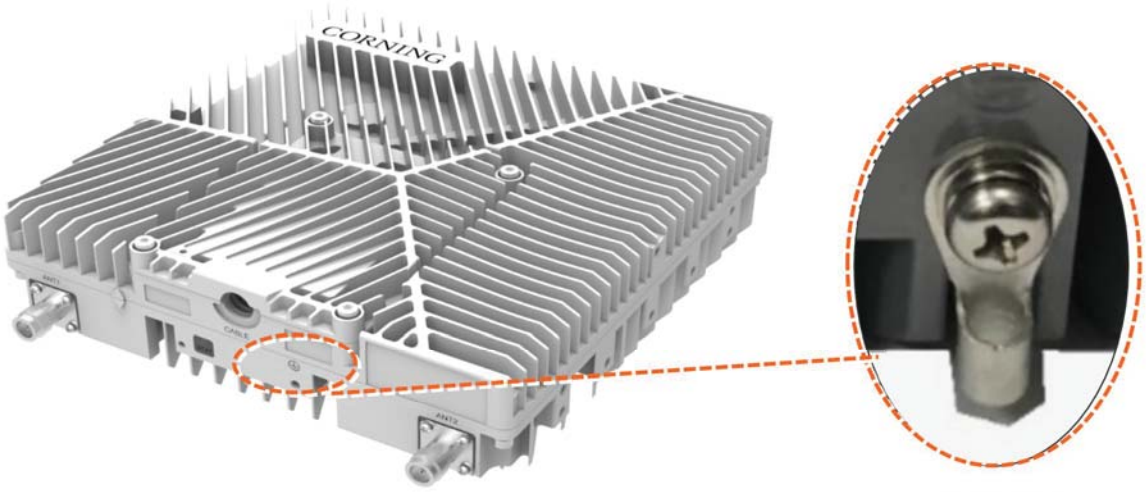

Figure 56. The Ground

2.5.4.2 Antenna

Connect the MRU male 4.3-10 Type duplexed RF ANT port to the broadband antenna(s) with proper cables.

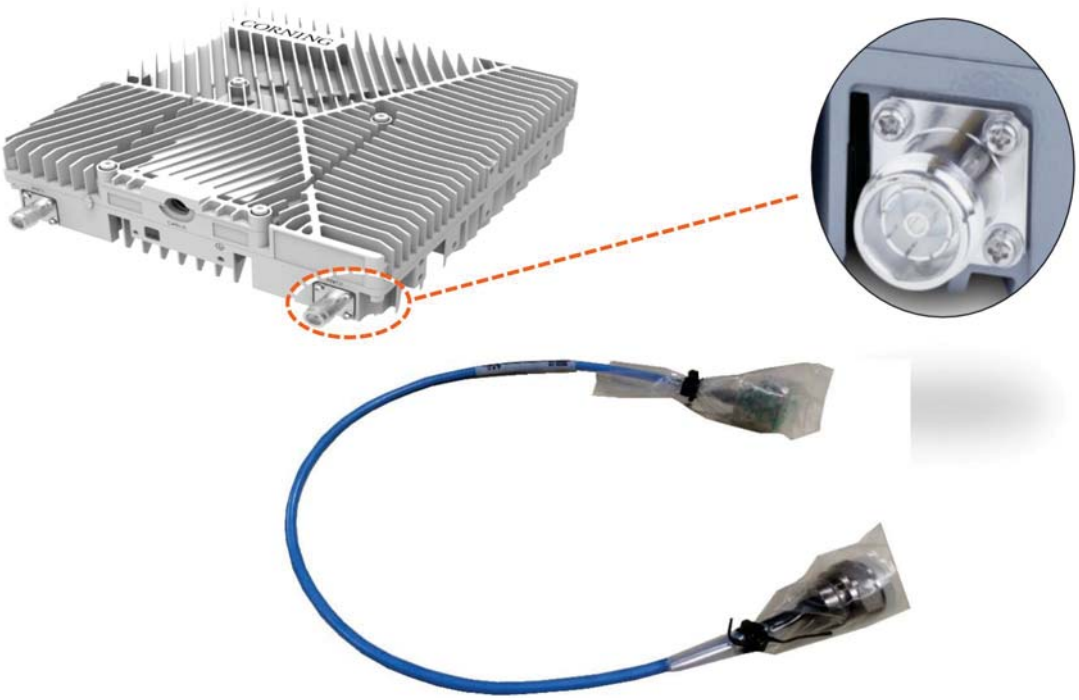

Figure 57. Antenna

**Notes:*

- *To avoid MIMO disruption, ensure that the antennas are connected correctly according to the combiner labels.*
- *There may be some configurations/use-cases which are not required for the combiner, as there is only one type of unit (either low or mid band).*

2.5.5 Combiner cables

Connect the Antenna cables as the Figure shows below.

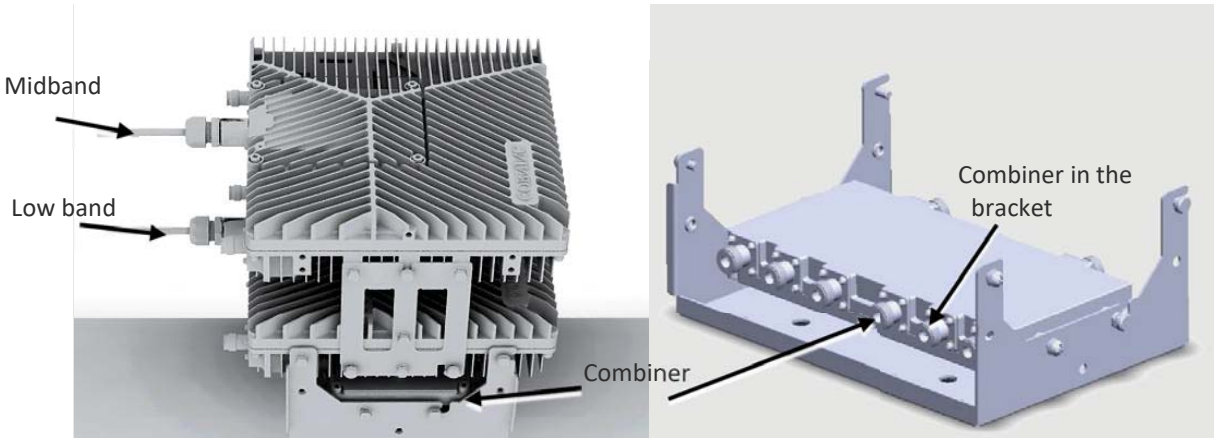

Figure 58. Combiner in the Bracket

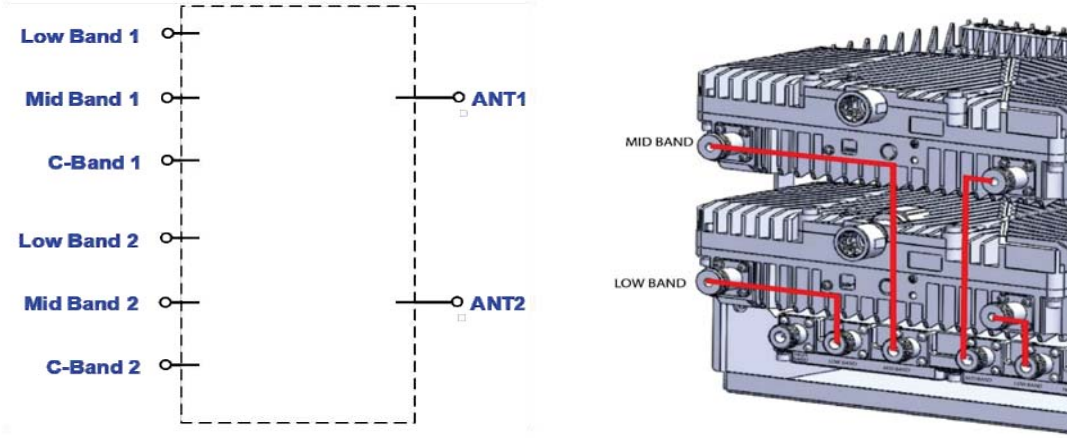

Figure 59. The Entire System Connection

**Notes:*

- *To avoid MIMO disruption, ensure that the antennas are connected correctly according to the combiner labels.*
- *There may be some configurations/use-cases which are not required for the combiner as there is only one type of the unit (either low or mid band).*

2.5.6 Verify normal operation

The LED indicator is located on the side panel of the dLRU, as shown in the Figure below.

Figure 60. LED Indicator

The indicator status description is shown in Table below.

Table 20. dLRU Low-Power Remote Unit LED Indicator

LED Indicator	Status	Description
STAT	Green	Power on or chip configuration process
	Green flashes (1 time/second)	Normal operation
	Green flashes (2 times/second)	Identify
	Red flashes (1 time/second)	Over temperature alarm
	Red	Hardware alarm

2.6 DMRU Installation

2.6.1 Verify box Contents

1. Open the package and verify all elements are available according to the following Table:

Table 21. DMRU Package Items List

Item	Quantity	Image	Part Number
HARDWARE – provided in the box			
DMRU unit-without fan	1		dMRU-G2-25 dMRU-G2-35 dMRU-G2-678 dMRU-G2-1719 dMRU-G2-2325
DMRU unit-with fan	1		dMRU-G2-25 dMRU-G2-35 dMRU-G2-678 dMRU-G2-1719 dMRU-G2-2325
Fan Assembly			Order separately
RF Jumper cables			N/A
HARDWARE – not provided			
4 screws #8 or 4 mm (for attachment to ceiling)	4		
SFP+ Pluggable Transceivers (hot-pluggable optical transceiver module); Support for option 8 line-rate 24.3 Gbps, single mode	2		

Item	Quantity	Image	Part Number
Optical cables Up to 10 km LC/UPC SM DX			
SOFTWARE			
NA			
Required TOOLS			
Phillips Screwdriver	1		

2.6.2 DMRU Dimensions

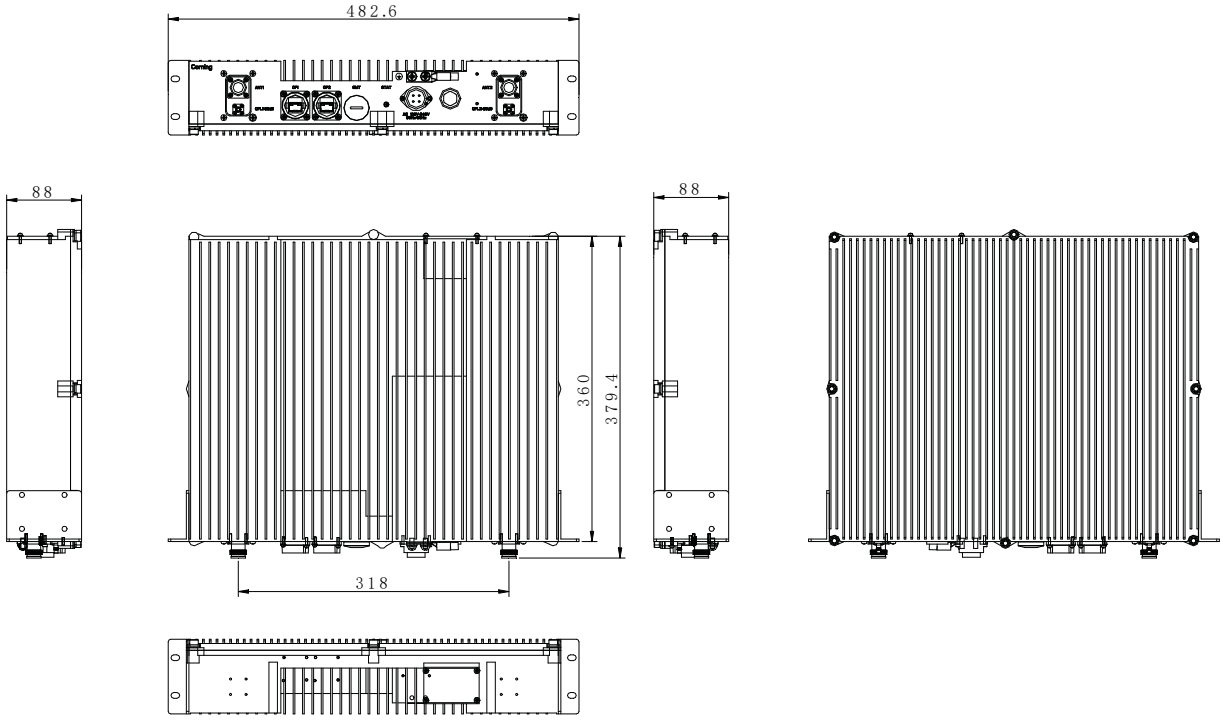

Figure 61. DMRU Dimensions - Without a Fan

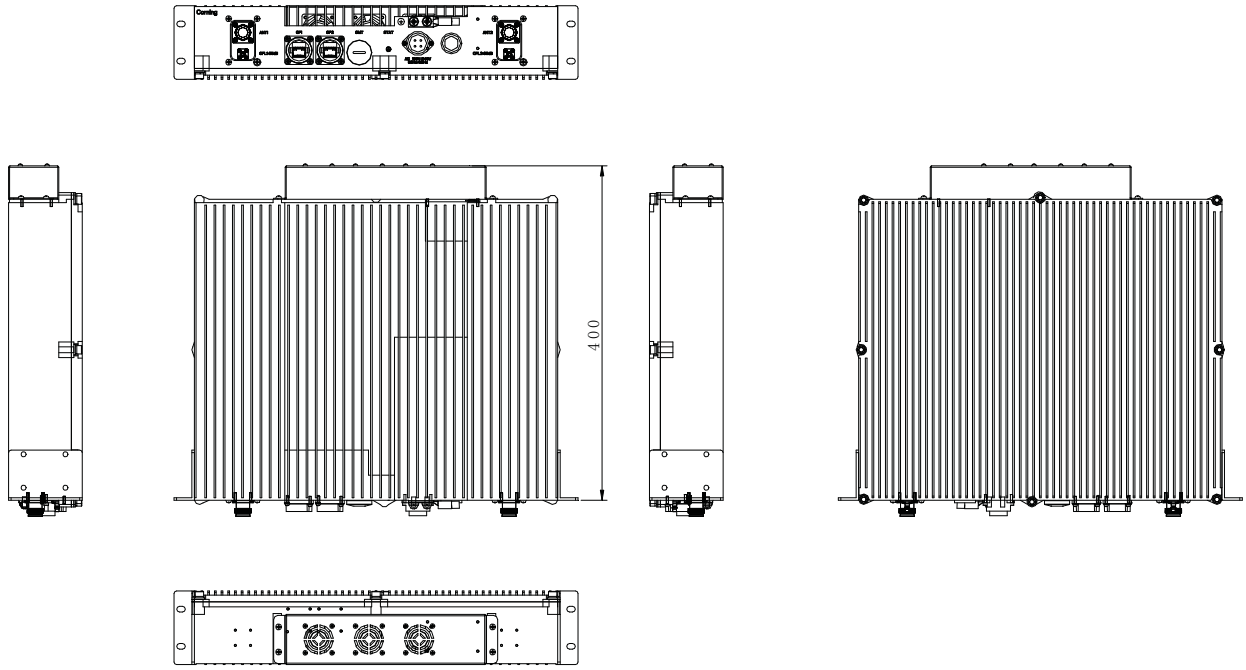

Figure 62. DMRU Dimensions - with Fan

Physical Dimensions		
Dimension (W x H x D) （approx.	Inch (mm)	17 x 3.5 x 14.4 (440 x 88 x 365)
Weight（approx.	Lbs. (Kg)	15 (6.8)

2.6.3 DMRU Interfaces

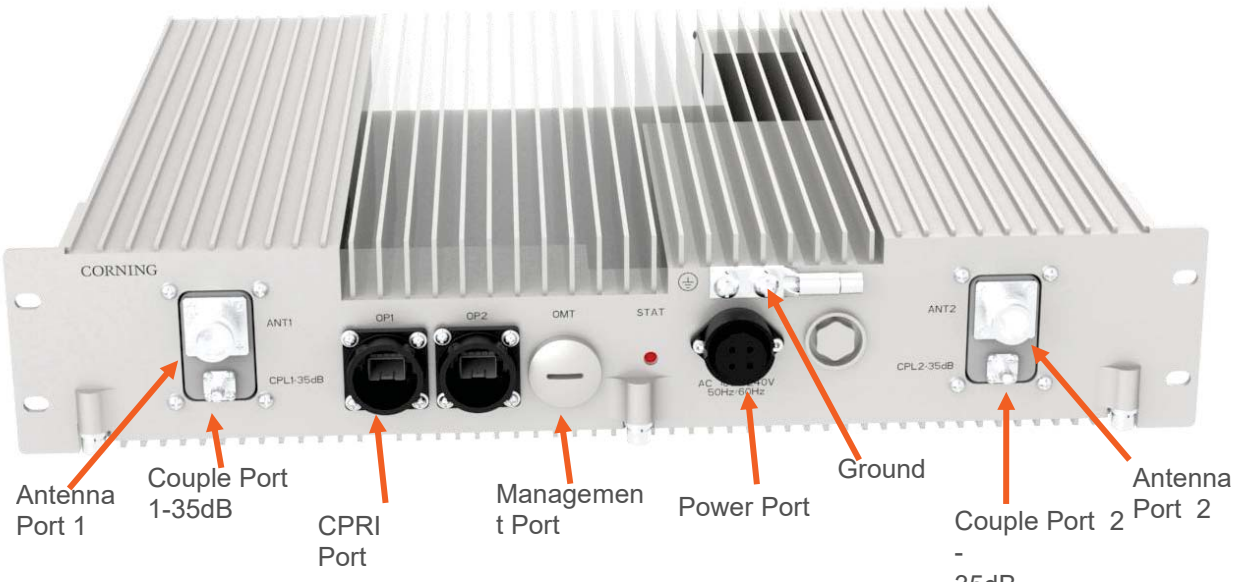

Figure 63. DMRU Front View

Connectors	
Antenna Ports	2, 4.3-10 female
Couple Ports	2, QMA female
CPRI Port	2, SFP+ 24.3Gbps
Management Ports	1, RJ45
Power Port	1, C016 20C003, male
Ground	1, Two holes M6

2.6.4 Cables Connection

For each of the units connect the external cables as follows:

- Power, see 2.6.5
- SFP+, see 2.6.6
- Fan, see 2.6.7

2.6.5 Power

Connect the AC wire to the DMRU connectors panel

Figure 64. DMRU Connectors Panel

2.6.6 SFP+ Cables

Remove the rubber stopper from the SFP+ connector located in the DMRU CPRI port

Connect the SFP+ LC/UPC SM DX optic cable to the DMRU optic connector.

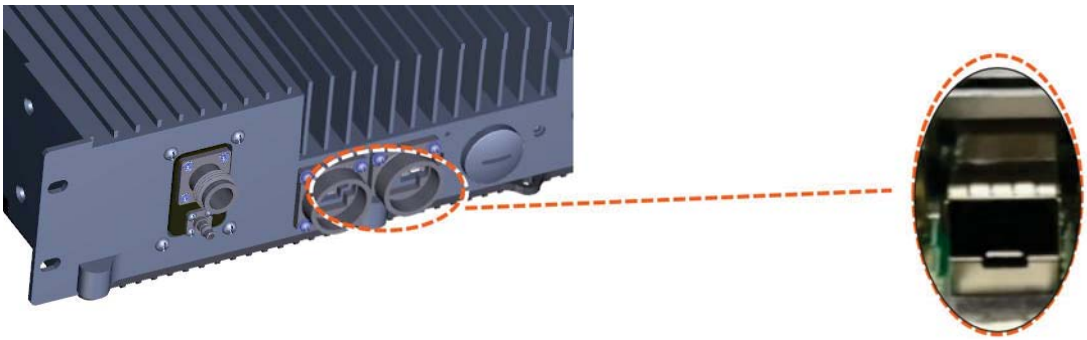

Figure 65. SFP Connector

Figure 66. SPF and Optical Cable

2.6.7 Fan module (optional)

If the upper and lower space of the equipment is less than 2U, a fan shall be added to assist heat dissipation.

Fan connection is shown in Figure 67.

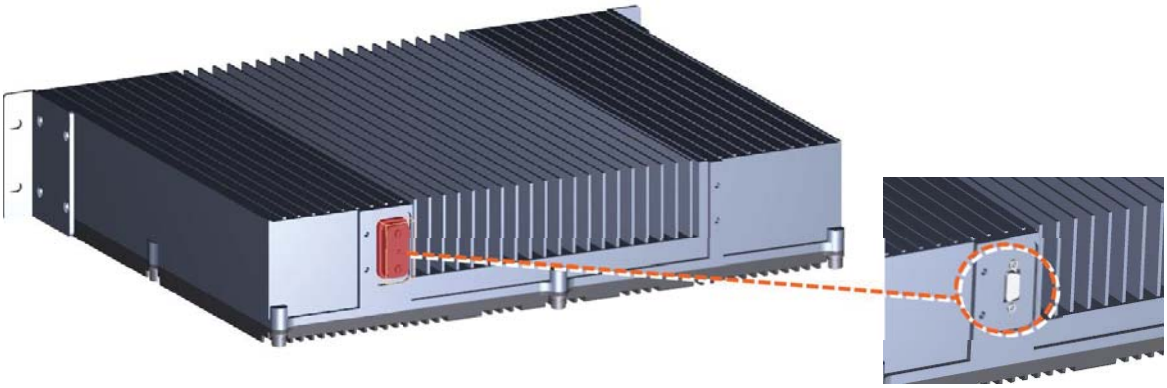

Figure 67. Fan Connection

Remove the cover plate of the end face joint and expose the joint DB15.

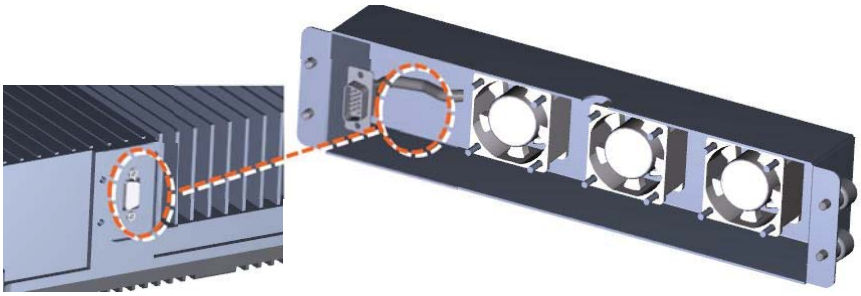

Figure 68. Fan Connection with DB15

Connect DB15.

Figure 69. Fan Installation

Four screws securing the fan module.

2.6.8 Mount the DMRU

The DMRU may be mounted on cabinet.

Push the cabinet into place and secure the four 4

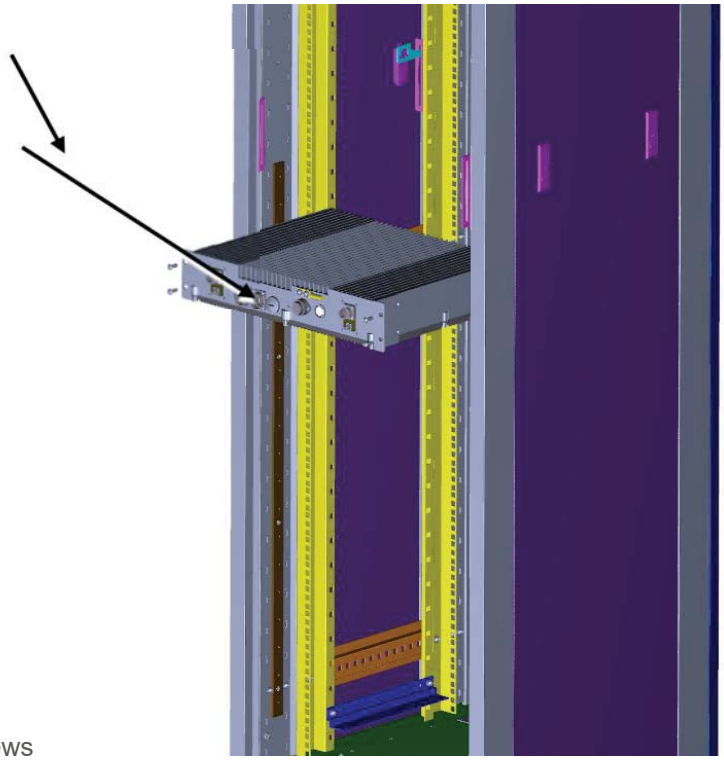

screws

Figure 70. Rack Installation

2.6.9 Connect the rest of the Cables

For each of the units, connect the cables as follows:

- Ground, see 2.6.10
- Antenna, see 2.6.11

2.6.10 Ground

Note: Ground according to local regulations

The following additional (not supplied) tools and components are required for connecting the system ground:

- Grounding wire - grounding wire should be sized according to local and national installation requirements. The provided grounding lug supports 6 AWG stranded copper wire conductors.

1. Use a wire-stripping tool to remove approximately 0.4 inch (10.9 mm) of the covering from the end of the grounding wire
2. Insert the stripped end of the grounding wire into the open end of the grounding lug
3. Crimp the grounding wire in the barrel of the grounding lug. Verify that the ground wire is securely attached to the ground lug by holding the ground lug and gently pulling on the ground wire
4. Prepare the other end of the grounding wire and connect it to an appropriate grounding point at the site to ensure adequate earth ground

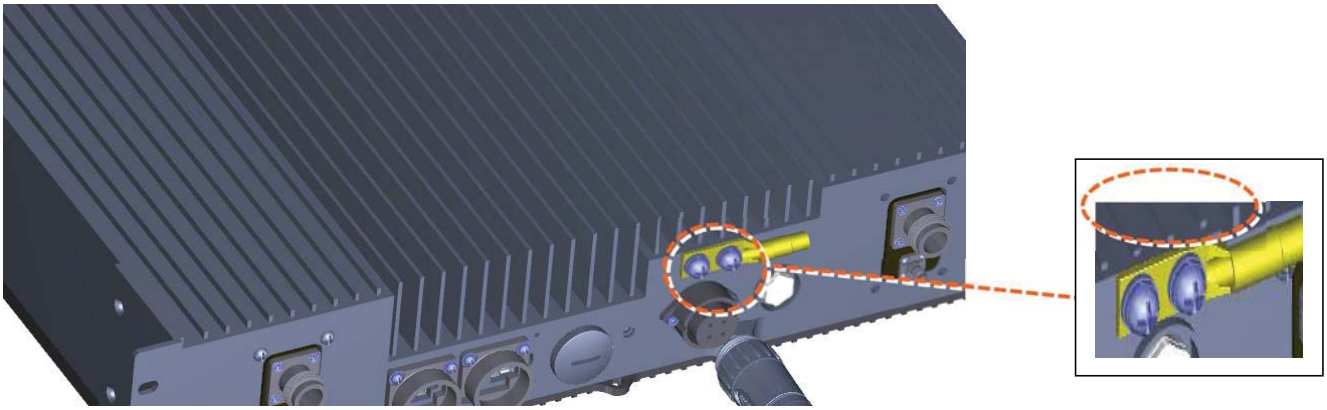

Figure 71. GND Connection

2.6.11 Antenna

Connect the DMRU male 4.3-10 Type duplexed RF “ANTENNA” port to the broadband antenna(s) using appropriate coax cables.

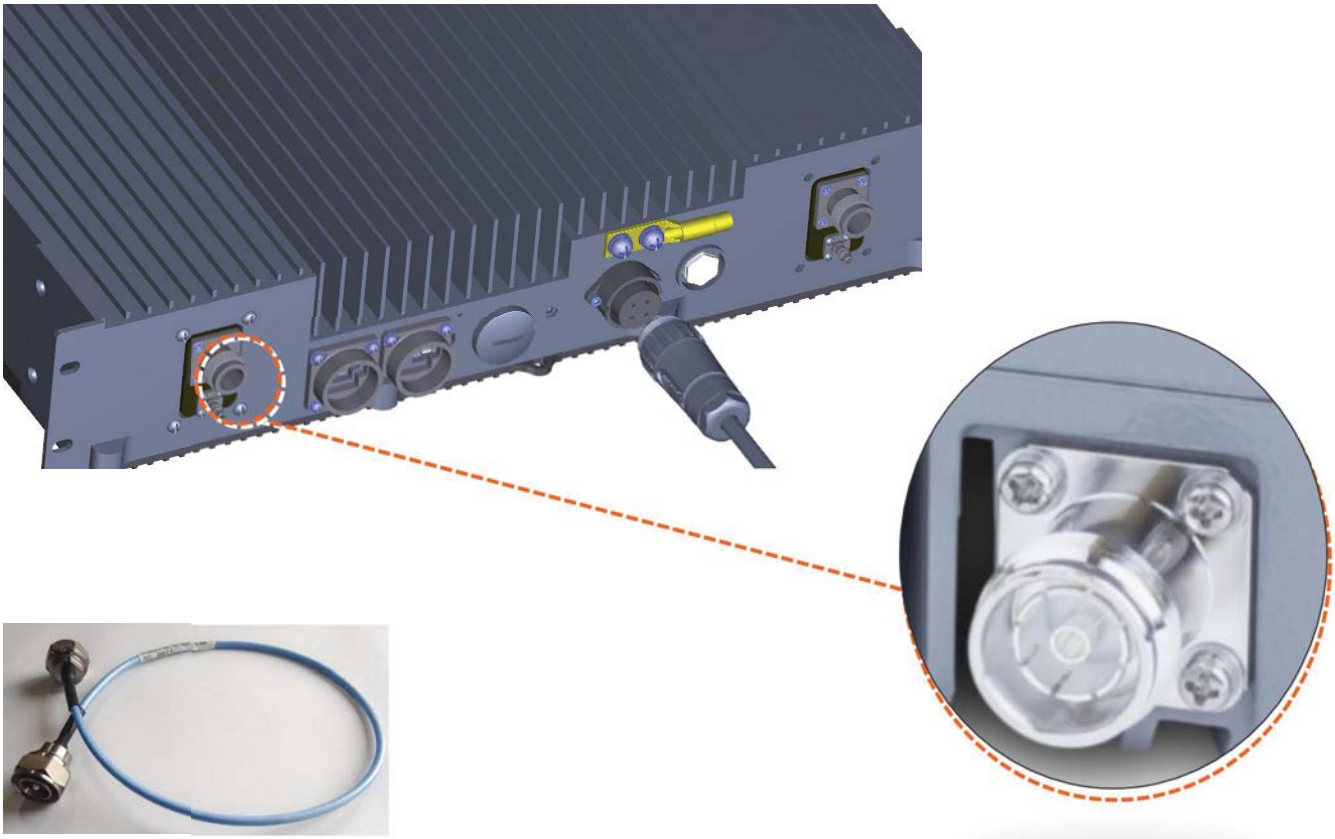

Figure 72. Antenna Connection

2.6.12 Verify normal operation

The following Table describes the DMRU LED behavior.

MODULE LED	Outside the module		
Status	**Description**	**Color**	**Status**
Power Up	The DMRU was powered up	Green	Solid
RUN	The system is up and running	Green	Blinking (1Hz)
Identify	Identify DMRU was activated	Green	Blinking (2Hz)
Over temperature	The DMRU temperature exceeded the max range	Red	Blinking(1Hz)
Hardware Failure	Hardware failure occurred	Red	Solid

Figure 73. LED on DMRU

3. GUI – General Description

This section provides general guidelines and tools for navigating the system GUI:

- Screen layout, see 3.1
- Main menu options, see 3.2.
- Default network settings, see 3.3.
- Supported access options, see 3.3

3.1 Screen Layout

The Information board (located at the top of the window) lists the device information.

The Navigation board (located on the left down of the window) lists the device and their functions.

The Control board (located on the right down of the window) lists the control functions.

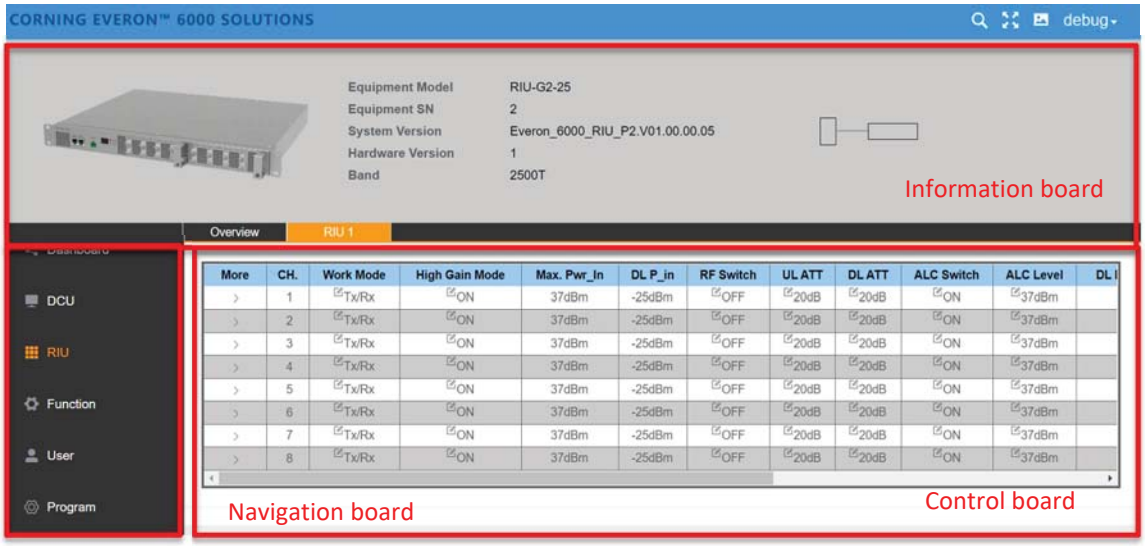

Figure 74. RIU Screen Layout

3.2 Function Options

The function options on the Web-GUI are listed in the following Table.

Function	Description
Device info	View the system topology and info about different system elements
Reset	Software reset for the selected device
Firmware	Upgrade or downgrade the firmware
Alarm Setting	Set the alarm including alarm enable/disable, alarm threshold
Import & Export	Import or export the config file
Log	Import or export the log file
Comm. Setting	Communication setting on the SNMP parameters
IP Setting	IP setting for the device
Site Report	Site information inventory

3.3 Supported Access Options

This section describes the HW and SW required for connecting to the HCM.

First, connect to the HCM with a laptop or a tablet.

The following browsers are supported:

- Microsoft Internet Explorer 11.0 and above
- Mozilla Firefox 42.0, 43.0 and above
- Google Chrome 45.0, 46.0 and above

After the initial configurations are done, it is recommended to establish remote access to the HCM by using the following:

LAN Ethernet connection to the HCM with a minimum connectivity and throughput capability of 256 Kbp

4. Session Access and first-time settings

When all the system elements are installed, the system administrator can login the system GUI and perform initial configurations.

It is recommended to start using Corning ® Everon™ 6000_G2 and the specific steps are as follows:

- **Commission a local session to the DCU**
- **Configure the LAN IP settings**
- **Perform the initial configurations (commissioning)**

4.1 Commission a Local Session

The following are the instructions for commissioning a local management session to perform basic system configurations via the system GUI.

➢ **To enter the system GUI**

1) Connect a computer (e.g., laptop) to the DCU OMT port via an RJ45 CAT 5 Ethernet cable as shown below:

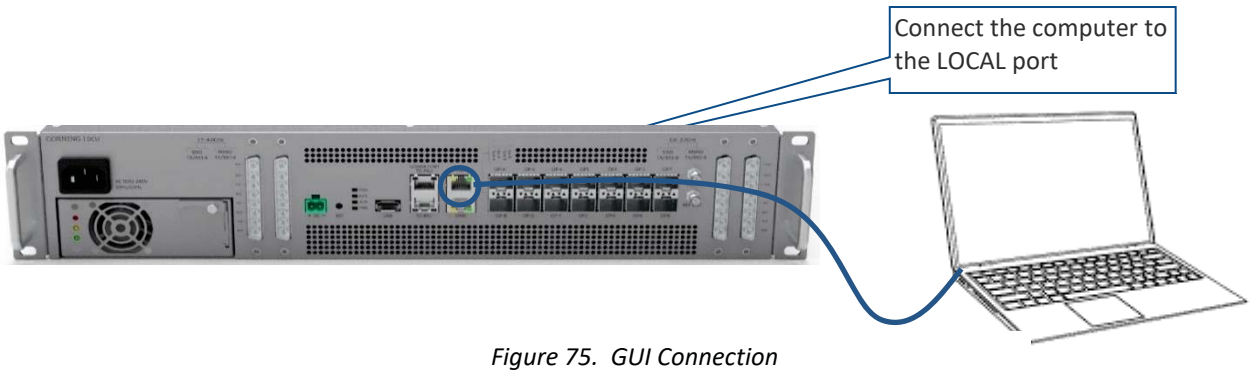

Figure 75. GUI Connection

**Notes:*

- *The LOCAL port is set to a static IP Address by default: 192.168.8.101;*
  - *Subnet Mask: 255.255.0.0. Your laptop/tablet network parameters must be set to match the subnet of the default IP address.*
- *The laptop/tablet IP address must be different from the LOCAL port IP address.*

2) Follow the steps below to set up your laptop/tablet network parameters (the steps may vary slightly depending on the OS version used):

   a. Click **Start** à **Settings** à **Network & Internet**

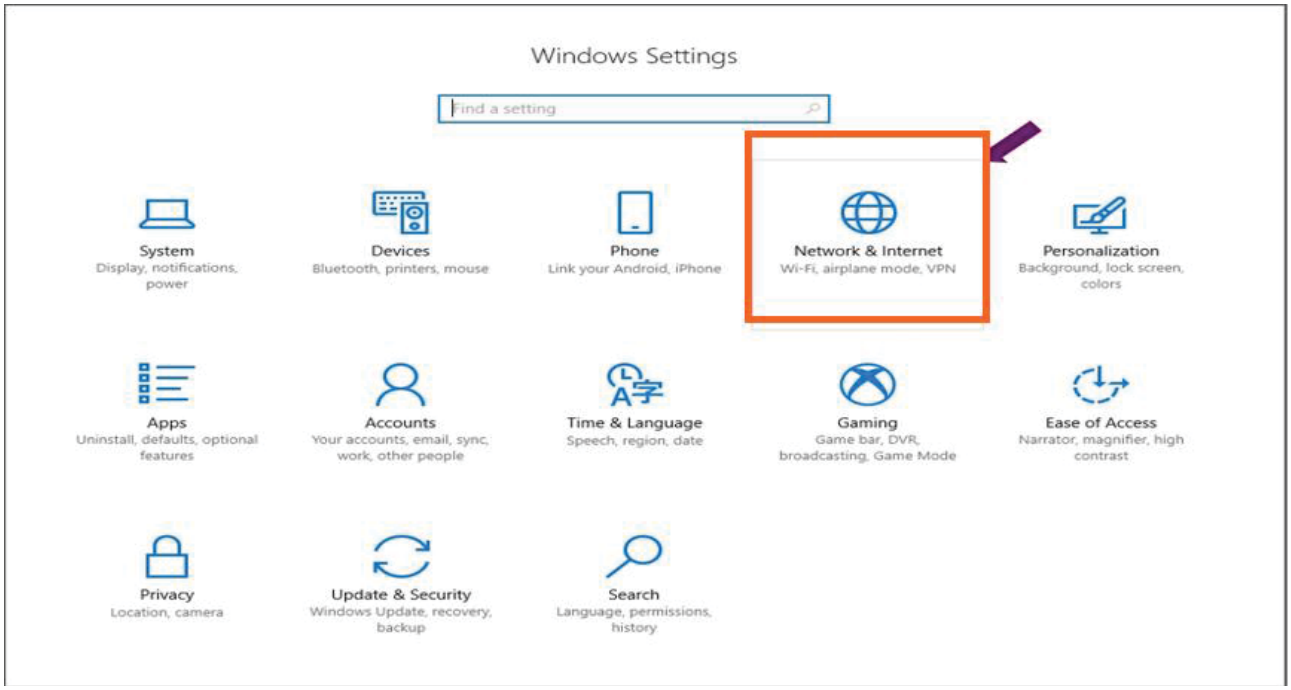

Figure 76. Network &Internet setting

b. Select **Ethernet** à **Change adapter options**

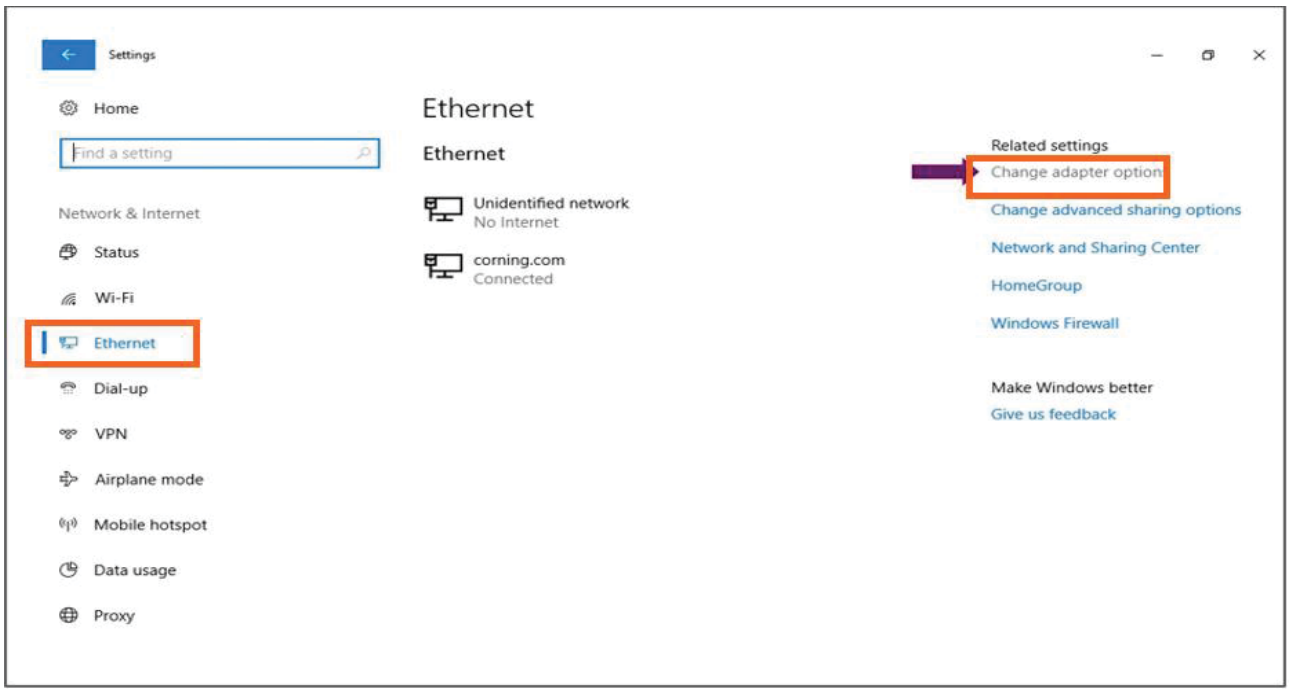

Figure 77. Ethernet setting

c. Right click on the **Ethernet 3** and select **Properties.**

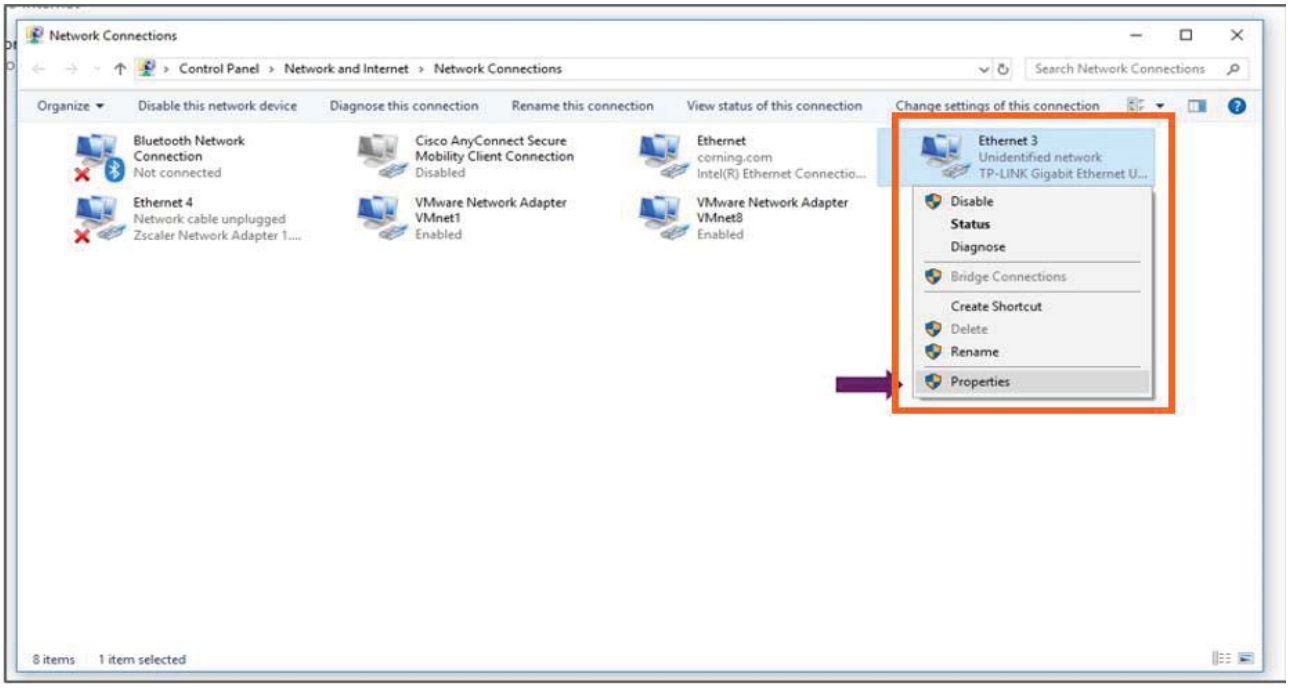

Figure 78. Ethernet 3

d. Select **Internet Protocol Version 4（TCP/IPv4）** and click **Properties**

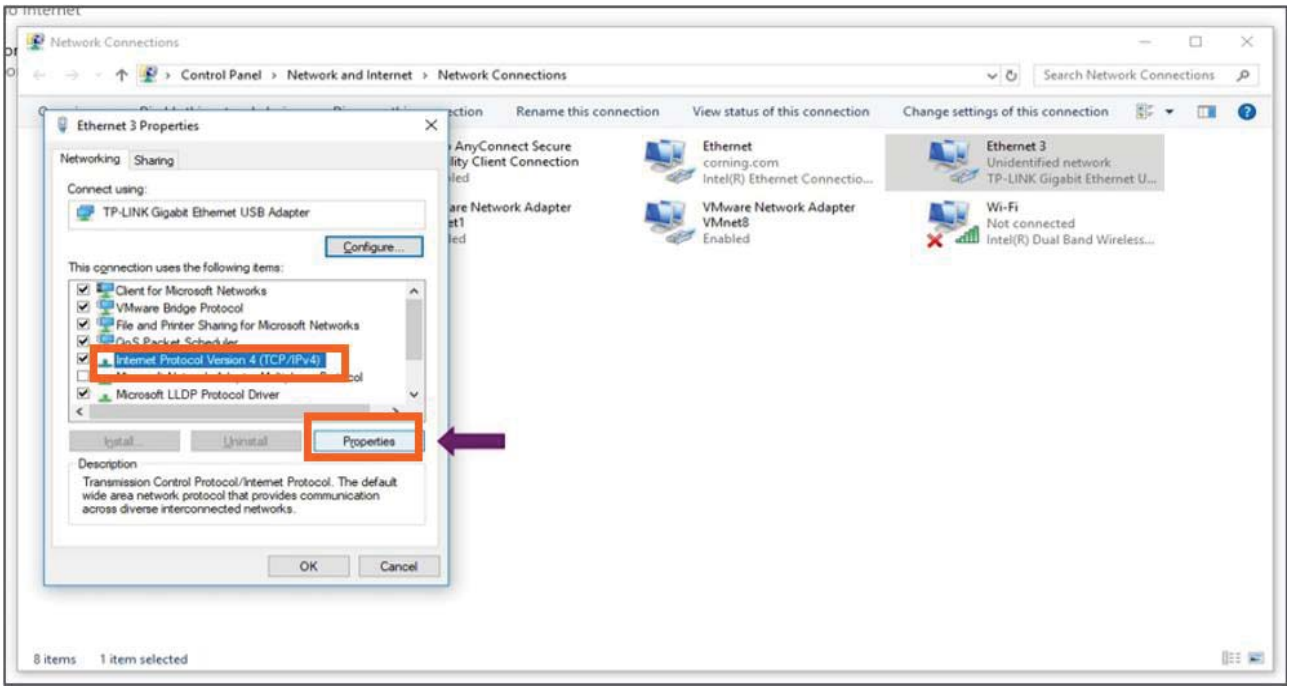

Figure 79. Ethernet 3 properties

i. Type in the IP address **192.168.8.3** and subnet mask **255.255.0.0** → click **OK**

ii. Examples of IP addresses:

- **Allowed: 192.168.8.3**
- **Not allowed: 192.168.8.101 (this IP is used by the LOCAL port).**

iii. Click **OK** and close the control panel